50Hz

Pentax®
WATER PUMPS

# GENERAL CATALOGUE

www.pentax-pumps.it

# Where there's water there's Pentax

**PENTAX s.p.a.**

Viale dell'Industria, 1
37040 Veronella (VR) - Italia
Tel. +39 0442 489500
Fax +39 0442 489510
com@pentax-pumps.it
www.pentax-pumps.it

Pentax® WATER PUMPS

# HISTORY

For many years **Pentax** has held a large share of the world market for motorized pumps. The sales department is constantly working to better serve existing customers and to open up new markets. This is possible thanks to the wide range of products available which allows to cover most of the applications in the pump field. Special attention is also paid to market surveys, so that any new requirements can be immediately transferred to the research and development department: the best way to properly develop and forecast future scenarios.

**1989**
Pentax is the result of a strategy designed at the end of the '80s and oriented to the creation of a corporate body structured on the decentralization of production

**1990**
The company was born from the fusion of Elettromac and Zetabase, two realities with years of experience in the sector. Thanks to advanced technologies and a rationalization of the production process, in the 90's the company imposed itself on the market

**1994**
Foras joins the group

**2000**
Increase model production, number of customers and delivery speed

**2010**
The Pentax group expands again with the entry of Marly: a company specialized in the realization of industrial pumps

**2018**
The group, now leader in the sector, reaches a consolidated turnover of 70 million euros

**2019**
Start of works to expand the operational headquarters with the creation of a new logistics hub of more than 8,000 square meters

**2022**
Installation of the 500kW photovoltaic system and start of commercial office expansion work

**2024**
Exa Pumps joins the group: a company specialized in the realization of submersible pumps

# MISSION

After more than **30 years of activity** we can finally trace the guidelines that have governed and directed the industrial development of **Pentax Industries SpA**. Actions and processes that have intersected with the obvious aim of creating value, benefits to be redistributed to the various components of the production and distribution process.

A rational allocation of available resources, together with a refined program of production decentralization have allowed the company to adapt to changing market conditions, each time with extreme rapidity.

Maximum attention to the markets, therefore, with the commitment to respond in real time to the specific needs of the different markets, paying particular attention to technological progress. All this in the perspective of a careful policy for **customer satisfaction**.

**"Creating value is our main goal"**

-

*Gianluigi Pedrollo, Chair man*

# VALUES

**Reliability**
Choosing Pentax means choosing safety at every stage

**Quality**
Where there is control, there is reliability: the basis for success

**Speed**
Impeccable delivery time

**Flexibility**
Pentax studies each case thoroughly, identifies the best solution and then takes action with security

**Variety**
The best service: a wide range of Pentax products, one for every need

# OFFICIAL JOURNAL OF THE EUROPEAN UNION

**Regulation UE 547/2012**
**ANNEX II**

«The benchmark for most efficient water pumps is MEI ≥ 0,70».

«The efficiency of a pump with a trimmed impeller is usually lower than that of a pump with the full impeller diameter. The trimming of the impeller will adapt the pump to a fixed duty point, leading to reduced energy consumption. The minimum efficiency index (MEI) is based on the full impeller diameter».

«The operation of this water pump with variable duty points may be more efficient and economic when controlled, for example, by the use of a variable speed drive that matches the pump duty to the system».

Information on benchmark efficiency is available at:
*www.europump.org/efficiencycharts.*

CERTIFICATO
Nr. 50 100 3634 Rev.010
SI ATTESTA CHE / THIS IS TO CERTIFY THAT
IL SISTEMA DI GESTIONE PER LA QUALITÀ DI
THE QUALITY MANAGEMENT SYSTEM OF
PENTAX S.p.A.
SEDE LEGALE E OPERATIVA:
REGISTERED OFFICE AND OPERATIVE SITE:
VIALE DELL'INDUSTRIA 1
IT - 37040 VERONELLA (VR)
SEDI OPERATIVE: VEDI ALLEGATO 1 / OPERATIONAL SITES: SEE ANNEX 1
È CONFORME AI REQUISITI DELLA NORMA
HAS BEEN FOUND TO COMPLY WITH THE REQUIREMENTS OF
UNI EN ISO 9001:2015
QUESTO CERTIFICATO È VALIDO PER IL SEGUENTE CAMPO DI APPLICAZIONE
THIS CERTIFICATE IS VALID FOR THE FOLLOWING SCOPE OF APPLICATION
Progettazione e fabbricazione di elettropompe e sistemi di pressurizzazione per acque. Commercializzazione di pompe sommerse e accessori per pompe. Procedura per lo svolgimento delle attività di pesatura per la determinazione della "Massa Lorda Verificata del contenitore" (VGM) secondo il Metodo 2 previsto dagli emendamenti al Capitolo VI Regola 2 della Convenzione SOLAS 74 come emendata (IAF 18, 29)
Design and manufacture of electric pumps and pressure systems for water. Trade of submersed pumps and accessories for pumps. Weighing procedures for obtaining the "Verified Gross Mass" (VGM) of a packed container according to the Method no. 2 prescribed by the amendments to SOLAS 74 Convention, chapter VI, regulation 2, as amended (IAF 18, 29)
Per l'Organismo di Certificazione / For the Certification Body
TÜV Italia S.r.l.
Validità / Validity
Dal / From: 2024-11-01
Al / To: 2027-10-31
ACCREDIA
SGQ N° 068A
Francesco Scarlata
Direttore Divisione Business Assurance / Business Assurance Division Manager
Data emissione / Issuing Date
2024-10-28
PRIMA CERTIFICAZIONE / FIRST CERTIFICATION: 2003-12-22
"LA VALIDITÀ DEL PRESENTE CERTIFICATO È SUBORDINATA A SORVEGLIANZA PERIODICA A 12 MESI E AL RIESAME COMPLETO DEL SISTEMA DI GESTIONE AZIENDALE CON PERIODICITÀ TRIENNALE"
"THE VALIDITY OF THE PRESENT CERTIFICATE DEPENDS ON THE ANNUAL SURVEILLANCE EVERY 12 MONTHS AND ON THE COMPLETE REVIEW OF COMPANY'S MANAGEMENT SYSTEM AFTER THREE YEARS"
TÜV Italia • Gruppo TÜV SÜD • Viale Fulvio Testi, 280/6 • 20126 Milano • Italia • www.tuvsud.com/it

CERTIFICATO
Nr. 50 100 12552 Rev.005
SI ATTESTA CHE / THIS IS TO CERTIFY THAT
IL SISTEMA DI GESTIONE AMBIENTALE DI
THE ENVIRONMENTAL MANAGEMENT SYSTEM OF
PENTAX S.p.A.
SEDE LEGALE E OPERATIVA:
REGISTERED OFFICE AND OPERATIONAL SITE:
VIALE DELL'INDUSTRIA 1
IT - 37040 VERONELLA (VR)
SEDI OPERATIVE: VEDI ALLEGATO 1 / OPERATIONAL SITES: SEE ANNEX 1
È CONFORME AI REQUISITI DELLA NORMA
HAS BEEN FOUND TO COMPLY WITH THE REQUIREMENTS OF
UNI EN ISO 14001:2015
QUESTO CERTIFICATO È VALIDO PER IL SEGUENTE CAMPO DI APPLICAZIONE
THIS CERTIFICATE IS VALID FOR THE FOLLOWING SCOPE OF APPLICATION
Fabbricazione di elettropompe e sistemi di pressurizzazione per acque mediante processi di lavaggio e verniciatura di fondo dei getti di ghisa effettuati da terzi, lavorazioni meccaniche, bilanciatura rotanti, assemblaggio, verniciatura, imballo e spedizione (IAF 18, 29)
Manufacture of electric pumps and water pressurization systems, including third-party washing and primer coating of cast-iron castings, mechanical machining, rotating component balancing, assembly, painting, packaging and shipping (IAF 18, 29)
CERTIFICAZIONE RILASCIATA IN CONFORMITÀ AL REGOLAMENTO TECNICO ACCREDIA RT-09
CERTIFICATION ISSUED IN ACCORDANCE TO ACCREDIA TECHNICAL REGULATION RT-09
00077
Per l'Organismo di Certificazione / For the Certification Body
TÜV Italia S.r.l.
Validità / Validity
Dal / From: 2026-06-16
Al / To: 2029-06-15
Francesco Scarlata
Direttore Divisione Business Assurance / Business Assurance Division Manager
Data emissione / Issuing Date:
2026-06-10
PRIMA CERTIFICAZIONE / FIRST CERTIFICATION: 2014-05-16
"LA VALIDITÀ DEL PRESENTE CERTIFICATO È SUBORDINATA A SORVEGLIANZA PERIODICA A 12 MESI E AL RIESAME COMPLETO DEL SISTEMA DI GESTIONE AZIENDALE CON PERIODICITÀ TRIENNALE"
"THE VALIDITY OF THE PRESENT CERTIFICATE DEPENDS ON THE ANNUAL SURVEILLANCE EVERY 12 MONTHS AND ON THE COMPLETE REVIEW OF COMPANY'S MANAGEMENT SYSTEM AFTER THREE YEARS"
TÜV Italia • Gruppo TÜV SÜD • Viale Fulvio Testi, 280/6 • 20126 Milano • Italia • www.tuvsud.com/it

CERTIFICATO
Nr. 50 100 14960 Rev.003
SI ATTESTA CHE / THIS IS TO CERTIFY THAT
IL SISTEMA DI GESTIONE SICUREZZA E SALUTE DEI LAVORATORI DI
THE OCCUPATIONAL HEALTH AND SAFETY MANAGEMENT SYSTEM OF
PENTAX S.p.A.
SEDE LEGALE E OPERATIVA:
REGISTERED OFFICE AND OPERATIONAL SITE:
VIALE DELL'INDUSTRIA 1
IT - 37040 VERONELLA (VR)
SEDI OPERATIVE: VEDI ALLEGATO 1 / OPERATIONAL SITES: SEE ANNEX 1
È CONFORME AI REQUISITI DELLA NORMA
HAS BEEN FOUND TO COMPLY WITH THE REQUIREMENTS OF
UNI EN ISO 45001:2023
QUESTO CERTIFICATO È VALIDO PER IL SEGUENTE CAMPO DI APPLICAZIONE
THIS CERTIFICATE IS VALID FOR THE FOLLOWING SCOPE
Progettazione e fabbricazione di elettropompe e sistemi di pressurizzazione per acque mediante processi di lavaggio e verniciatura di fondo dei getti di ghisa, lavorazioni meccaniche, bilanciatura rotanti, assemblaggio, verniciatura, imballo e spedizione. Commercializzazione di pompe sommerse e accessori per pompe (IAF 18, 29)
Design and manufacture of electric pumps and pressure system for water by processes of: washing and priming of cast iron items, mechanical machining, impellers and motor shafts balancing, assembling, painting, packing and shipment. Trade of submersed pumps and accessories for pumps (IAF 18, 29)
ACCREDIA
SCR N° 009F
Per l'Organismo di Certificazione / For the Certification Body
TÜV Italia S.r.l.
Validità / Validity
Dal / From: 2024-02-27
Al / To: 2027-02-26
Francesco Scarlata
Direttore Divisione Business Assurance / Business Assurance Division Manager
Data emissione / Issuing Date
2024-01-31
PRIMA CERTIFICAZIONE / FIRST CERTIFICATION: 2018-02-27 (EMESSO DA ALTRO ODC/ ISSUED BY OTHER CB)
"LA VALIDITÀ DEL PRESENTE CERTIFICATO È SUBORDINATA A SORVEGLIANZA PERIODICA A 12 MESI E AL RIESAME COMPLETO DEL SISTEMA DI GESTIONE AZIENDALE CON PERIODICITÀ TRIENNALE"
"THE VALIDITY OF THE PRESENT CERTIFICATE DEPENDS ON THE ANNUAL SURVEILLANCE EVERY 12 MONTHS AND ON THE COMPLETE REVIEW OF COMPANY'S MANAGEMENT SYSTEM AFTER THREE YEARS"

Pentax
industrias

# INDEX

PM 18

CP 21

MD 23

**SELF-PRIMING 25**

CAM 28

INOX 33

ULTRA A 36

ULTRA SA 38

AP 40

CAB 42

MP/A 45

MPX 47

## THREADED CENTRIFUGAL 51

CM 54

MB 59

CB 62

CR 67

CS 70

CH 78

## CENTRIFUGAL FLANGED PUMPS 83

CM 92

CMG-CMGX 93

CA-CAX / 4CA-4CAX 94

CMS 134

**MULTISTAGE HORIZONTAL 141**

ULTRA 144

ULTRA S 149

**MULTISTAGE VERTICAL 157**

ULTRA V/L 160

ULTRA LG 161

ULTRA SV/SL/SLX 169

ULTRA SLG/SLXG 176

ULTRA HX 181

ULTRA HS/HX 187

**IE3-IE4 MOTORS 205**

80-132 206

160-355 207

**BOOSTER SETS 213**

AQUADOMUS 214

SUPERDOMUS 216

SUPERDOMUS+VSD 217

SELF-PRIMING 218

THREADED CENTRIFUGAL 221

CENTRIFUGAL FLANGED 224

MULTISTAGE 227

| DRAINAGE AND SEWAGE | 235 |
|---|---|
| DP/DPV | 238 |
| DPM | 241 |
| DH | 243 |
| DC | 245 |
| DB | 251 |
| DM | 253 |
| DM4 | 258 |
| DTR 101 | 262 |
| DTR/DTRT | 264 |
| DG | 269 |

DX 272

DV 274

DV4 278

## SUBMERSIBLE WELL PUMPS 283

5PES 288

4E 292

6E 304

6ES 314

6-8-10LMG line 324

6LRH & 6LM line 354

8LRH & 8LM lines 387

10-12LM & E14 line 426

**SUBMERSIBLE WELL MOTORS 457**

4MPE/6MPE 459

6R/8R/10R 462

PTR12/PTR14 468

**INDUSTRIAL LINE 471**

MSV-4MSV 473

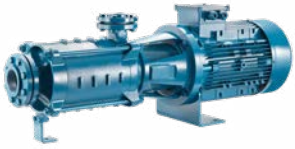

MSH-4MSH 481

HP SERIES 489

PSC 492

VP SERIES 495

## ACCESSORIES 499

ELECTRONIC FLOW CONTROL 500

VARIABLE SPEED DRIVE 501

PROTECTION/CONTROL PANEL 505

TANKS 510

MEMBRANES 510

PRESSURE SWITCHES 511

PRESSURE GAUGES 511

FLEXIBLE HOSES 511

CONNECTORS 512

VALVES 512

FLOAT SWITCHES 512

CABLES JOINTS 513

LEVEL PROBES 513

**GENERAL SALES CONDITIONS 515**

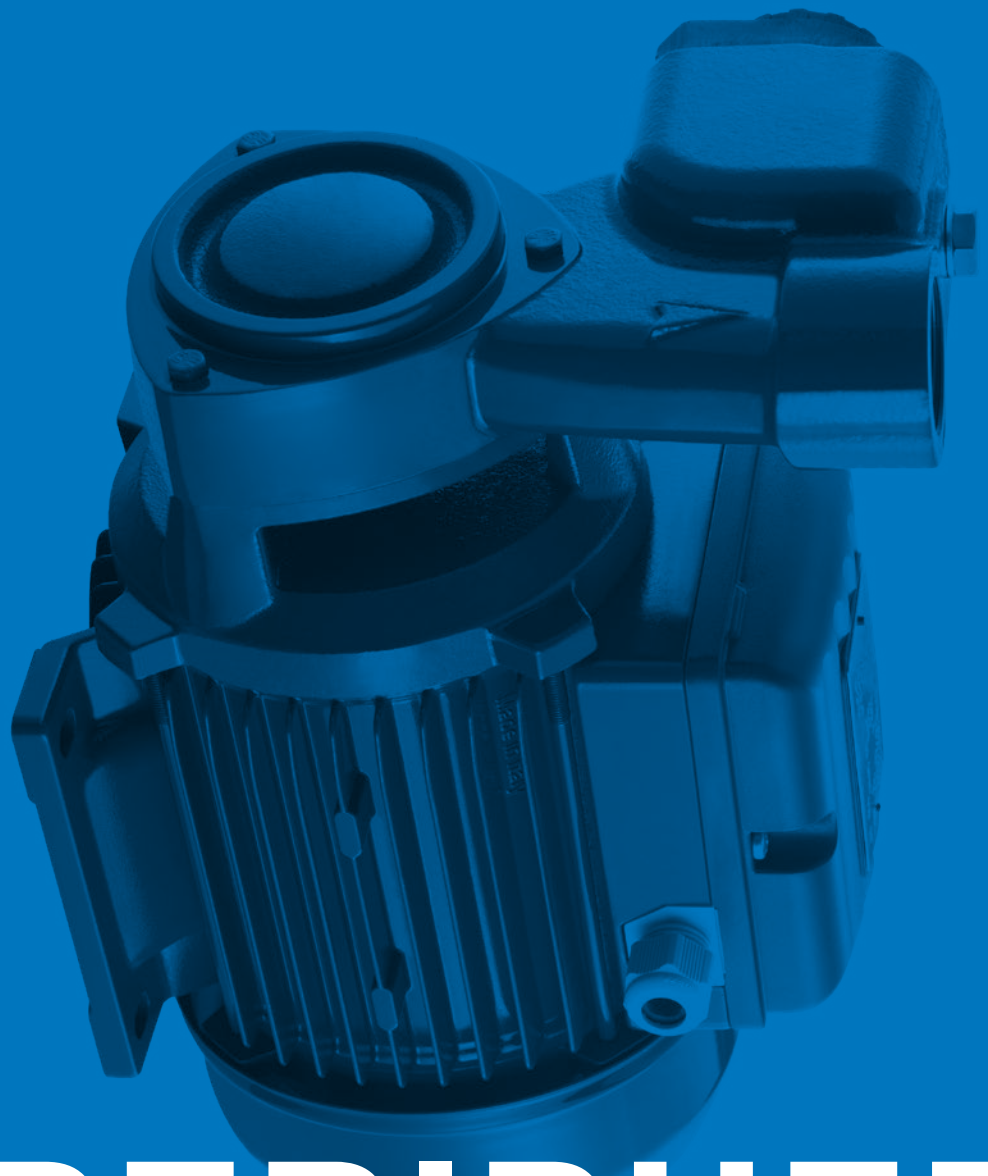

# PERIPHERALS

# PERIPHERAL PUMPS

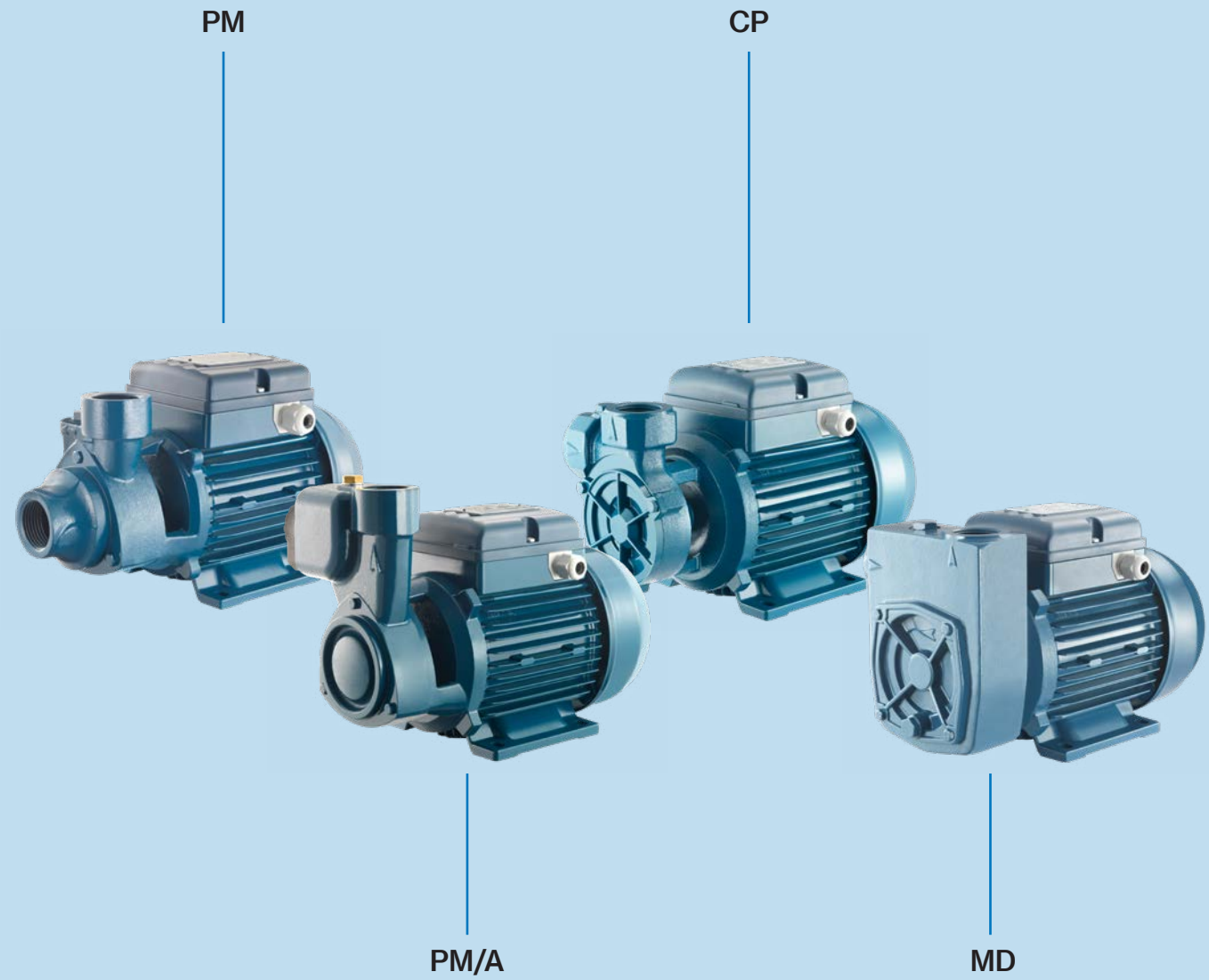


Range of peripheral and liquid ring type positive displacement pumps; they are characterized by the high ratio between the performances offered and the power required.

**Applications:**

- Small domestic installations
- Boiler feeding
- For washing
- Pressurization of industrial plants
- Small autoclaves
- Transfer of liquids

# PERIPHERAL PUMPS

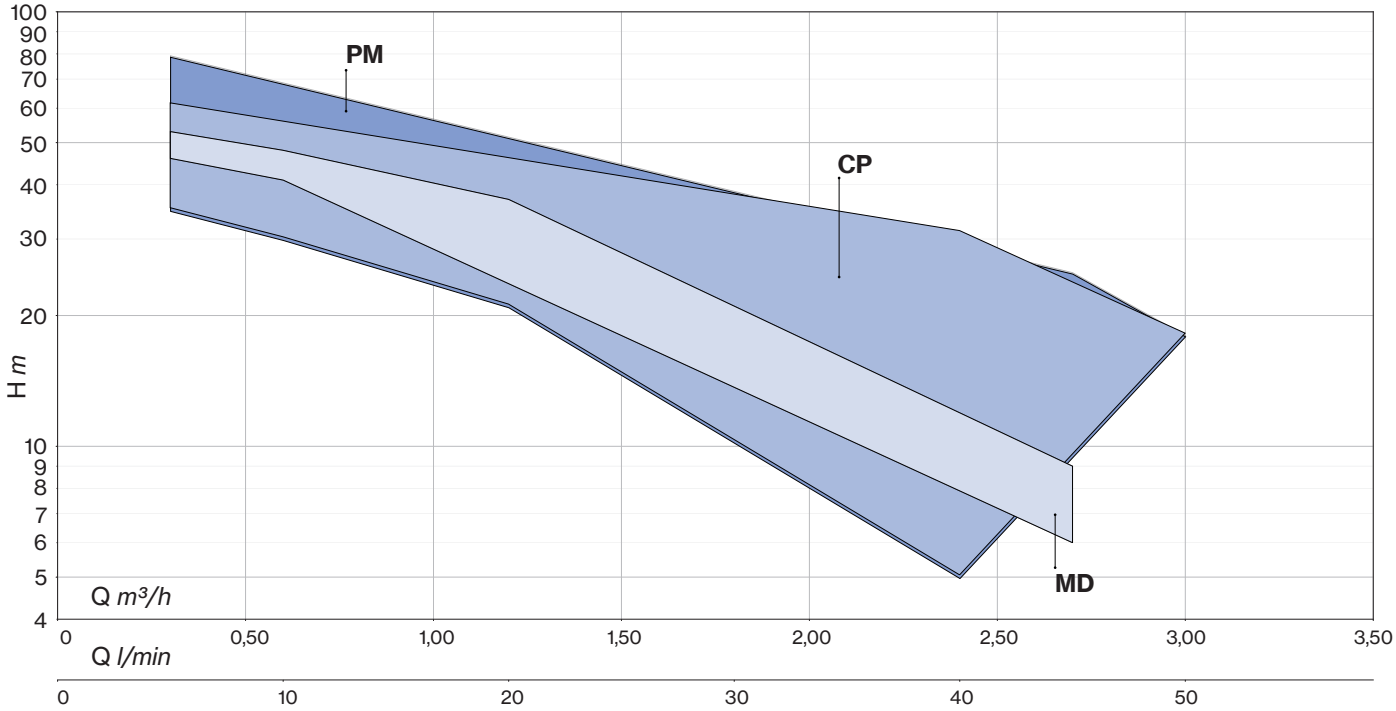

# PM

PM

PM/A

PM50

Peripheral positive displacement pumps with front suction (PM) and side suction with self-priming system (PM A) for small household systems and simple industrial applications; characterised by a considerable ratio between performance and required output.

## Construction features

| | |
|---|---|
| **Painting** | cataphoresis (50) |
| **Pump body** | cast iron<br>bronze (45BR) |
| **Motor bracket** | cast iron<br>bronze (45BR)<br>aluminum with AISI304 insert (50) |
| **Impeller** | brass |
| **Mechanical seal** | ceramic-graphite-NBR |
| **Motor shaft** | stainless steel AISI 416 |
| **Liquid temperature** | 0 - 90 °C |
| **Operating pressure** | max 6 bar (45, 50)<br>max 8 bar (65, 80)<br>max 9 bar (90) |

## Motor

| | |
|---|---|
| **2 poles induction motor** | 3~ 230/400V - 50Hz<br>1~ 230V - 50Hz<br>(with thermal protection) |
| **Insulation class** | F |
| **Protection degree** | IPX4 |

**PMT 45 A**

- version: standard / **A** self-priming / **BR** bronze pump body
- motor: 1~ / **T** 3~
- pump type

| LOTS | | | | |
|---|---|---|---|---|
| TYPE | TRUCK | | CONTAINER | |
| | PALLET (cm) | N° pumps | PALLET (cm) | N° pumps |
| **PM(T) 45÷50** | 85×110×170 | 198 | 85×110×190 | 220 |
| | 80×120×170 | 207 | 80×120×190 | 230 |
| **PM(T) 45A**<br>**PM(T) 65A**<br>**PM(T) 80-90** | 80×110×170 | 105 | 85×110×190 | 135 |
| | | | 85×120×170 | 136 |
| **PM(T) 65** | 80×120×140 | 152 | 80×120×175 | 171 |
| | 85×100×140 | 160 | 85×100×175 | 180 |
| **PM(T) 80A** | 80×120×145 | 102 | 80×120×190 | 136 |

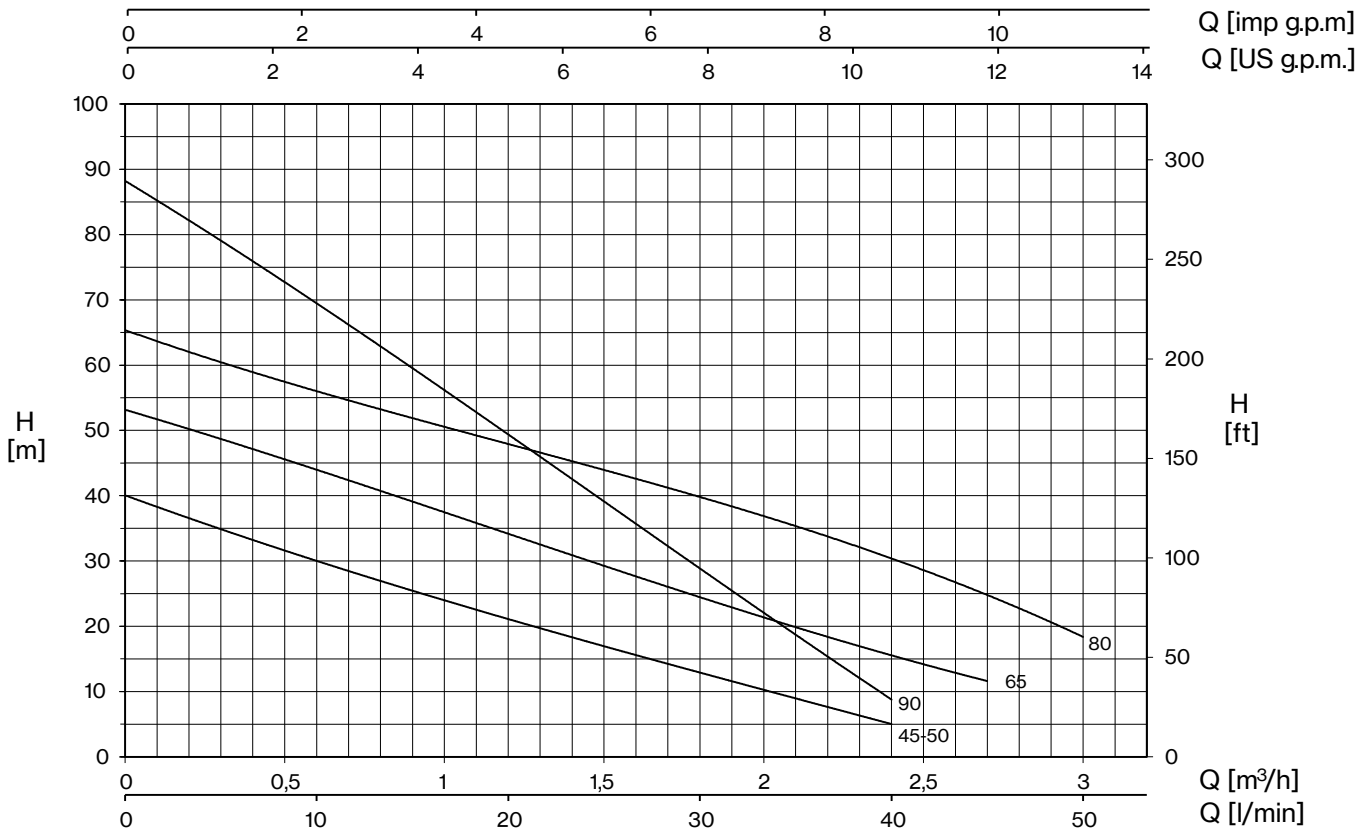


| TYPE - 50 Hz | | P2 | | P1 | | CURRENT | | Q (m³/h - l/min) | | | | | | | |
|---|---|---|---|---|---|---|---|---|---|---|---|---|---|---|---|
| 1~ | 3~ | | | 1~ | 3~ | 1~ 230V | 3~ 400V | 0 | 0,3 | 0,6 | 1,2 | 1,8 | 2,4 | 2,7 | 3 |
| | | | | | | | | 0 | 5 | 10 | 20 | 30 | 40 | 45 | 50 |
| | | HP | kW | kW | | A | | H (m) | | | | | | | |
| **PM 45** | **PMT 45** | 0,5 | 0,37 | 0,5 | 0,5 | 2,3 | 1,0 | 40,0 | 35,0 | 30,0 | 21,0 | 13,0 | 5,0 | | |
| **PM 45BR** | **PMT 45BR** | 0,5 | 0,37 | 0,5 | 0,5 | 2,3 | 1,0 | 40,0 | 35,0 | 30,0 | 21,0 | 13,0 | 5,0 | | |
| **PM 45A** | **PMT 45A** | 0,5 | 0,37 | 0,5 | 0,5 | 2,3 | 1,0 | 40,0 | 35,0 | 30,0 | 21,0 | 13,0 | 5,0 | | |
| **PM 50** | **-** | 0,5 | 0,37 | 0,5 | - | 2,3 | - | 40,0 | 35,0 | 30,0 | 21,0 | 13,0 | 5,0 | | |
| **PM 65** | **PMT 65** | 0,7 | 0,5 | 0,9 | 0,9 | 4,0 | 1,7 | 53,1 | 48,8 | 44,1 | 33,8 | 24,7 | 15,5 | 11,6 | |
| **PM 65A** | **PMT 65A** | 0,7 | 0,5 | 0,9 | 0,9 | 4,0 | 1,7 | 53,1 | 48,8 | 44,1 | 33,8 | 24,7 | 15,5 | 11,6 | |
| **PM 80** | **PMT 80** | 1 | 0,74 | 1,1 | 1,1 | 5,2 | 2,0 | 65,0 | 61,0 | 56,0 | 48,0 | 39,0 | 31,0 | 25,1 | 18,0 |
| **PM 80A** | **PMT 80A** | 1 | 0,74 | 1,1 | 1,1 | 5,2 | 2,0 | 65,0 | 61,0 | 56,0 | 48,0 | 39,0 | 31,0 | 25,1 | 18,0 |
| **PM 90** | **PMT 90** | 1 | 0,74 | 1,2 | 1,1 | 5,6 | 2,0 | 88,2 | 79,2 | 69,3 | 49,5 | 28,8 | 8,8 | | |

# PM

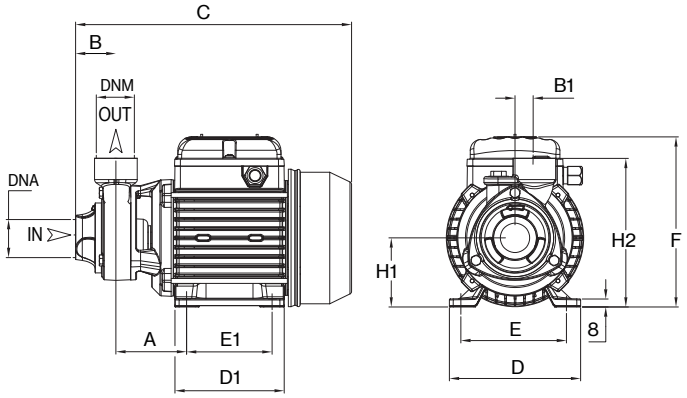


| TYPE | | DIMENSIONS (mm) | | | | | | | | | | | | | | | | Kg |
|---|---|---|---|---|---|---|---|---|---|---|---|---|---|---|---|---|---|---|
| 1~ | 3~ | A | B | B1 | C | D | D1 | E | E1 | F | H1 | H2 | DNA | DNM | I | L | M | |
| **PM 45** | **PMT 45** | 63 | 50 | 20 | 260 | 120 | 101 | 100 | 80 | 158 | 63 | 143 | | | 265 | 150 | 175 | 6,5 |
| **PM 45BR** | **PMT 45BR** | 63 | 50 | 20 | 260 | 120 | 101 | 100 | 80 | 158 | 63 | 143 | | | 265 | 150 | 175 | 7 |
| **PM 65** | **PMT 65** | 71,5 | 42 | 20 | 256 | 120 | 101 | 100 | 80 | 158 | 63 | 145 | 1” G | 1” G | 285 | 150 | 180 | 8,5 |
| **PM 80** | **PMT 80** | 72,5 | 41 | 20 | 280 | 135 | 112 | 112 | 89 | 172 | 71 | 152 | | | 300 | 170 | 195 | 10,5 |
| **PM 90** | **PMT 90** | 74,5 | 50 | 20 | 286 | 135 | 112 | 112 | 89 | 172 | 71 | 158 | | | 310 | 185 | 195 | 11 |

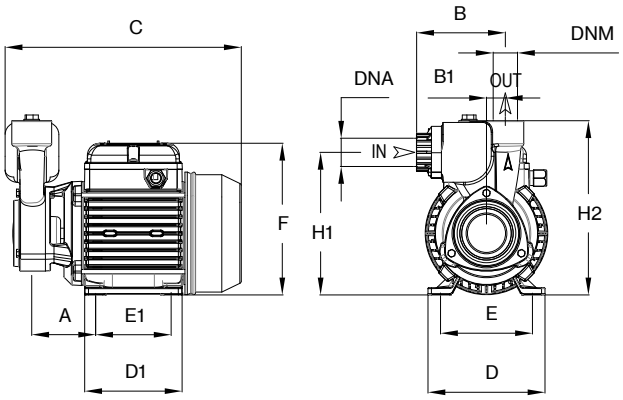


| TYPE | | DIMENSIONS (mm) | | | | | | | | | | | | | | | | Kg |
|---|---|---|---|---|---|---|---|---|---|---|---|---|---|---|---|---|---|---|
| 1~ | 3~ | A | B | B1 | C | D | D1 | E | E1 | F | H1 | H2 | DNA | DNM | I | L | M | |
| **PM 45A** | **PMT 45A** | 63 | 89 | 20 | 240 | 120 | 101 | 100 | 80 | 158 | 150 | 184 | | | 300 | 170 | 195 | 7,5 |
| **PM 65A** | **PMT 65A** | 71,5 | 101 | 20 | 248 | 120 | 101 | 100 | 80 | 158 | 157 | 193 | 1” G | 1” G | 300 | 170 | 195 | 9 |
| **PM 80A** | **PMT 80A** | 71,5 | 101 | 20 | 271 | 135 | 112 | 112 | 89 | 172 | 165 | 201 | | | 290 | 170 | 230 | 11 |

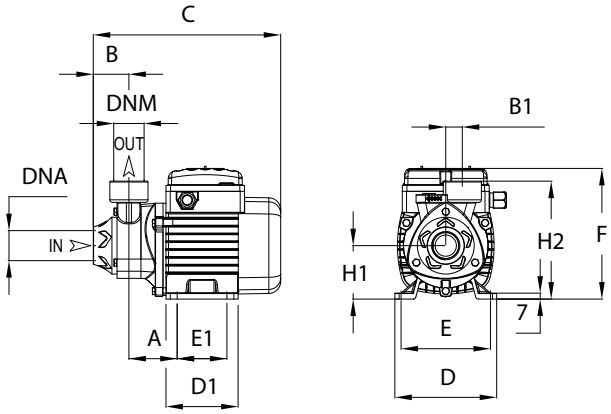


| TYPE | DIMENSIONS (mm) | | | | | | | | | | | | | | | | Kg |
|---|---|---|---|---|---|---|---|---|---|---|---|---|---|---|---|---|---|
| 1~ | A | B | B1 | C | D | D1 | E | E1 | F | H1 | H2 | DNA | DNM | I | L | M | |
| **PM 50** | 52 | 42 | 20 | 221 | 120 | 85 | 98 | 67 | 154 | 63 | 139 | 1” G | 1” G | 245 | 150 | 175 | 5,5 |

# CP

Peripheral positive displacement pumps with side suction for small household systems and simple industrial applications; characterised by a considerable ratio between performance and required power; frontal brass insert avoiding the risk of blockage.

## Construction features

| | |
|---|---|
| **Pump body** | cast iron and brass |
| **Motor bracket** | cast iron |
| **Impeller** | brass |
| **Mechanical seal** | ceramic-graphite-NBR |
| **Motor shaft** | stainless steel AISI 416 |
| **Liquid temperature** | 0 - 90 °C |
| **Operating pressure** | max 8 bar |

## Motor

| | |
|---|---|
| **2 poles induction motor** | 3~ 230/400V - 50Hz<br>1~ 230V - 50Hz<br>(with thermal protection) |
| **Insulation class** | F |
| **Protection degree** | IPX4 |

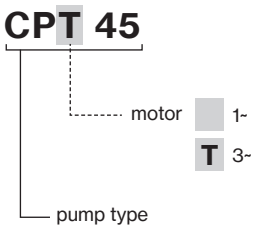


| LOTS | | | | |
|---|---|---|---|---|
| TYPE | TRUCK | | CONTAINER | |
| | PALLET (cm) | N° pumps | PALLET (cm) | N° pumps |
| **CP(T) 45** | 85×110×170 | 207 | 85×110×190 | 220 |
| | 80×120×170 | 198 | 80×120×190 | 230 |
| **CP(T) 75** | 85×110×170 | 105 | 85×110×190 | 135 |
| | | | 80×120×170 | 136 |

# CP

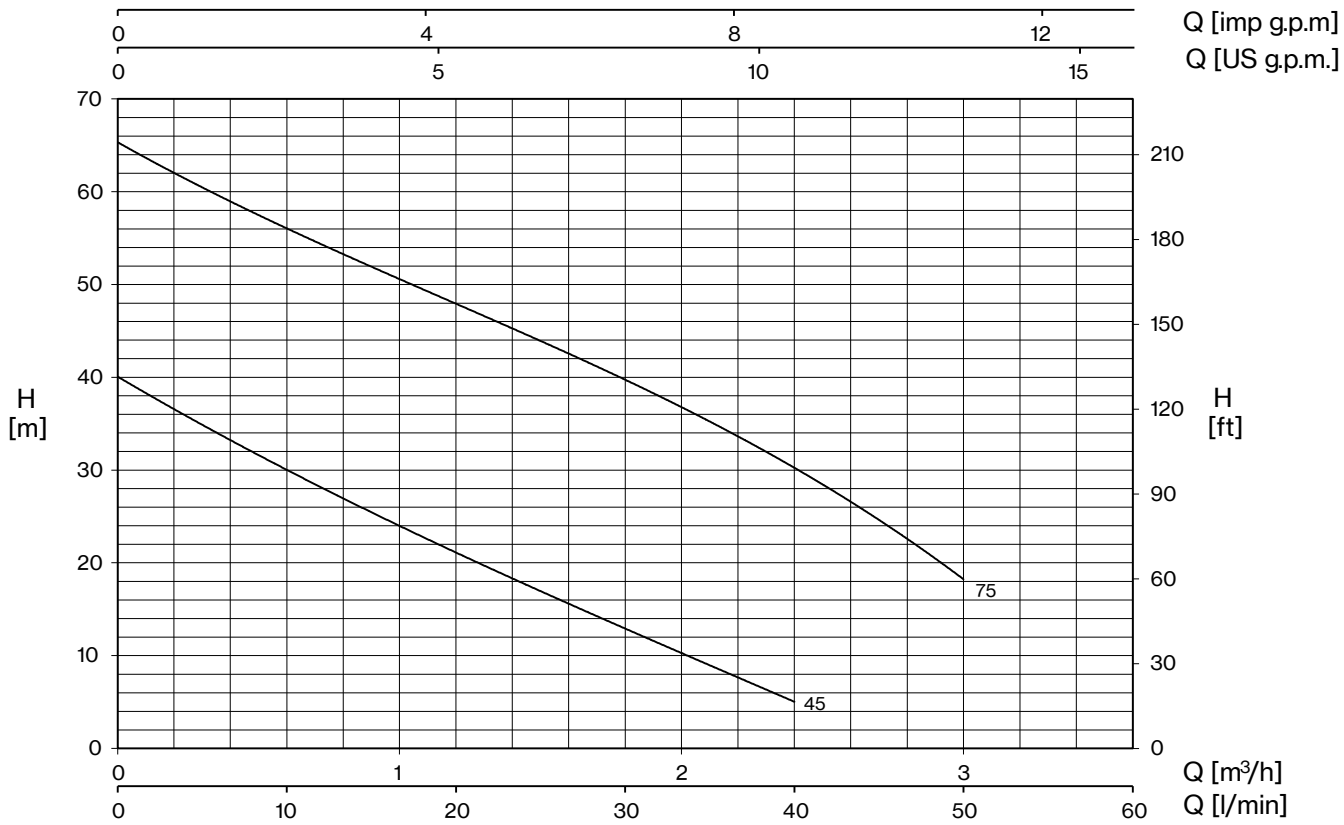


| TYPE - 50 Hz | | P2 | | P1 | | CURRENT | | Q (m³/h - l/min) | | | | | |
|---|---|---|---|---|---|---|---|---|---|---|---|---|---|
| 1~ | 3~ | | | 1~ | 3~ | 1~ 230V | 3~ 400V | 0,3 | 0,6 | 1,2 | 1,8 | 2,4 | 3 |
| | | | | | | | | 5 | 10 | 20 | 30 | 40 | 50 |
| | | HP | kW | kW | | A | | H (m) | | | | | |
| **CP 45** | **CPT 45** | 0,5 | 0,37 | 0,5 | 0,5 | 2,3 | 1,0 | 35,0 | 30,0 | 21,0 | 13,0 | 5,0 | |
| **CP 75** | **CPT 75** | 1 | 0,74 | 1,11 | 1,13 | 5,2 | 2,0 | 61,0 | 56,0 | 48,0 | 39,0 | 31,0 | 18,0 |

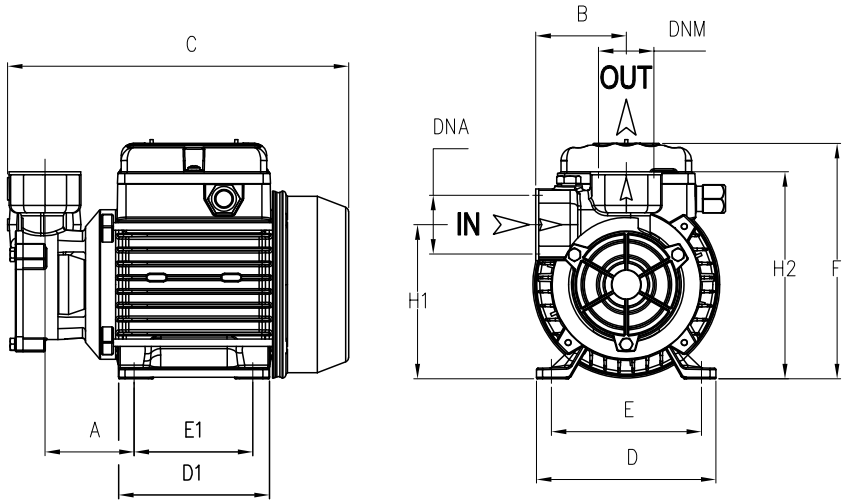


| TYPE | | DIMENSIONS (mm) | | | | | | | | | | | | | | | Kg |
|---|---|---|---|---|---|---|---|---|---|---|---|---|---|---|---|---|---|
| ~1 | ~3 | A | B | C | D | D1 | E | E1 | F | H1 | H2 | DNA | DNM | I | L | M | |
| **CP 45** | **CPT 45** | 67 | 60 | 235 | 120 | 101 | 97 | 80 | 165 | 105 | 140 | 1" G | 1" G | 265 | 145 | 165 | 5,7 |
| **CP 75** | **CPT 75** | 71,5 | 60 | 263 | 135 | 112 | 112 | 89 | 172 | 124 | 156 | | | 310 | 185 | 195 | 9,2 |

# MD

Volumetric pumps with liquid ring impeller that gives considerable suction power. Particularly suitable for liquid transfer (including volatile liquids). The pumps have a frontal brass cover thus avoiding the risk of blockage.

## Construction features

| | |
|---|---|
| **Pump body** | cast iron and brass |
| **Motor bracket** | cast iron |
| **Impeller** | brass |
| **Mechanical seal** | ceramic-graphite-NBR |
| **Motor shaft** | stainless steel AISI 416 |
| **Liquid temperature** | 0 - 90 °C |
| **Operating pressure** | max 8 bar |

## Motor

| | |
|---|---|
| **2 poles induction motor** | 3~ 230/400V - 50Hz<br>1~ 230V - 50Hz<br>(with thermal protection) |
| **Insulation class** | F |
| **Protection degree** | IPX4 |

**MDT 75 -G**

- mech. seal: standard / **G** for diesel
- motor: 1~ / **T** 3~
- pump type

| LOTS | | | | |
|---|---|---|---|---|
| TYPE | TRUCK | | CONTAINER | |
| | PALLET (cm) | N° pumps | PALLET (cm) | N° pumps |
| **MD(T) 75-100** | 85×110×170 | 105 | 85×110×190<br>80×120×170 | 135<br>136 |

# MD

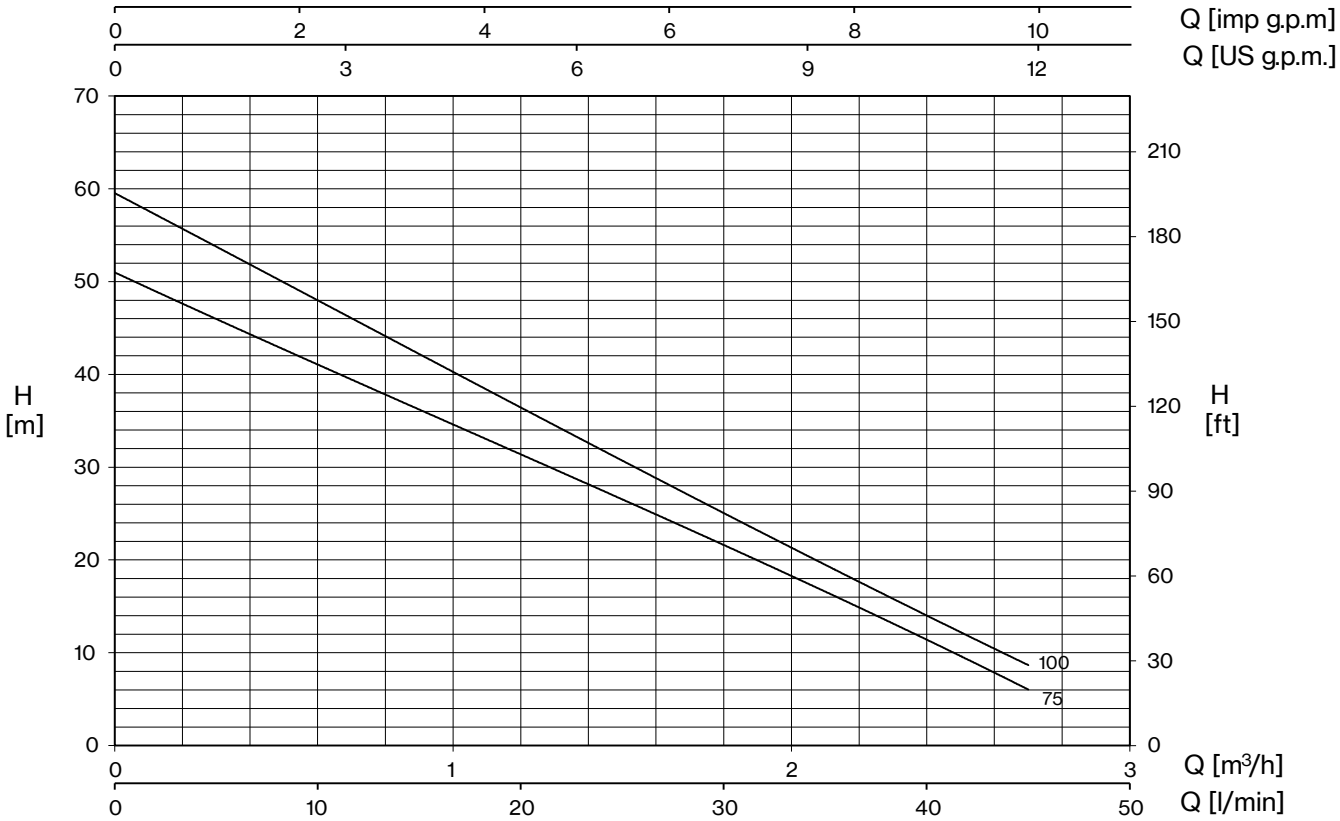


| TYPE - 50 Hz | | P2 | | P1 | | CURRENT | | Q (m³/h - l/min) | | | | | |
|---|---|---|---|---|---|---|---|---|---|---|---|---|---|
| 1~ | 3~ | | | 1~ | 3~ | 1~ 230V | 3~ 400V | 0,3 | 0,6 | 1,2 | 1,8 | 2,4 | 2,7 |
| | | | | | | | | 5 | 10 | 20 | 30 | 40 | 45 |
| | | HP | kW | kW | | A | | H (m) | | | | | |
| **MD 75** | **MDT 75** | 0,8 | 0,59 | 1,03 | 0,94 | 5,0 | 1,7 | 46,0 | 41,0 | 31,5 | 21,5 | 11,5 | 6,0 |
| **MD 100** | **MDT 100** | 1 | 0,74 | 1,17 | 0,98 | 5,4 | 2,1 | 53,0 | 48,0 | 37,0 | 25,0 | 13,5 | 9,0 |

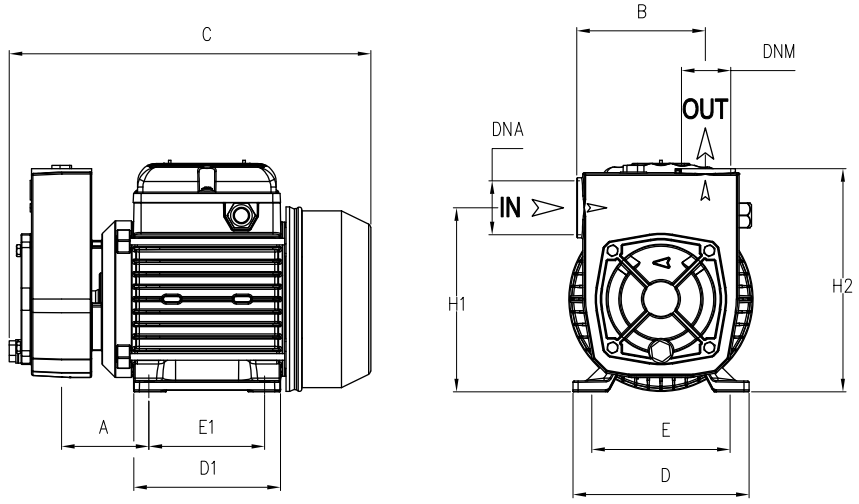


| TYPE | | DIMENSIONS (mm) | | | | | | | | | | | | | | Kg |
|---|---|---|---|---|---|---|---|---|---|---|---|---|---|---|---|---|
| ~1 | ~3 | A | B | C | D | D1 | E | E1 | H1 | H2 | DNA | DNM | I | L | M | |
| **MD 75** | **MDT 75** | 70 | 98,5 | 270 | 135 | 112 | 112 | 89 | 141 | 170 | 1" G | 1" G | 310 | 185 | 195 | 11,1 |
| **MD 100** | **MDT 100** | 70 | 98,5 | 270 | 135 | 112 | 112 | 89 | 141 | 170 | | | 310 | 185 | 195 | 11,8 |

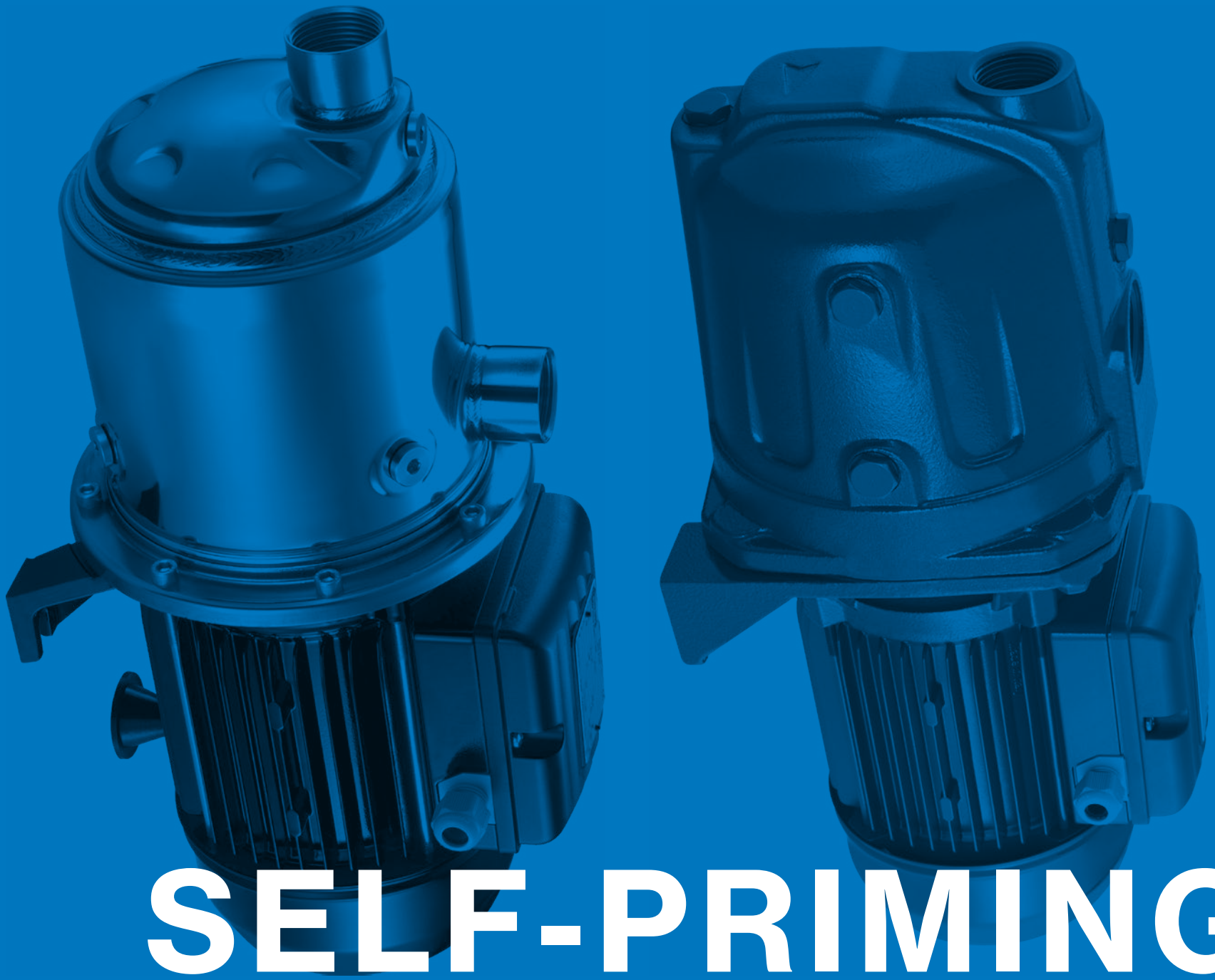

# SELF-PRIMING

# SELF-PRIMING PUMPS

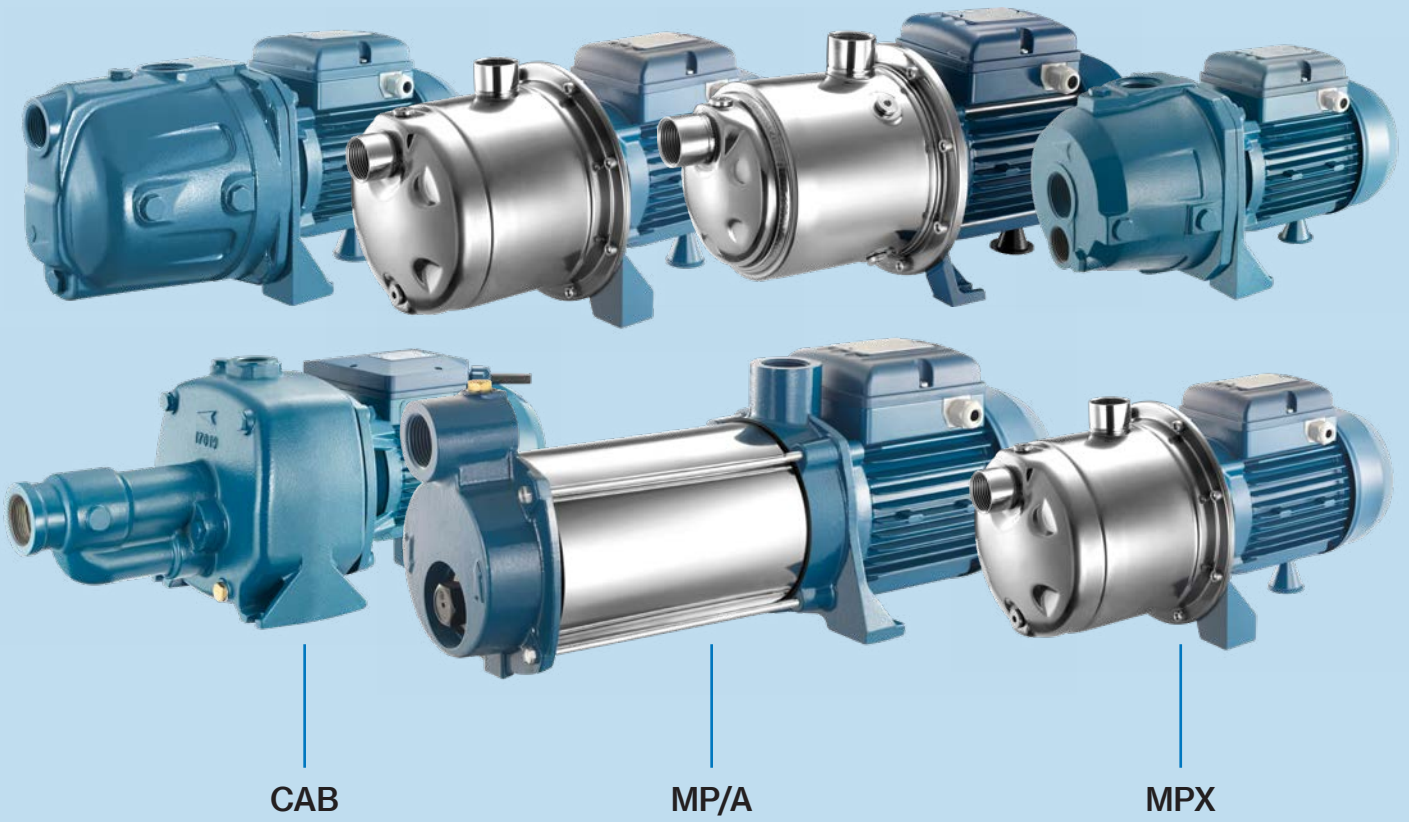


Wide range of single and multistage self-priming pumps, characterized by the fact of being able to handle liquids in the presence of dissolved gases.

**Applications:**

- Water supply
- Pressurization
- Liquid transfer
- Irrigation and tank emptying
- Small automatic systems of pressure increase

# SELF-PRIMING PUMPS

## Stainless steel

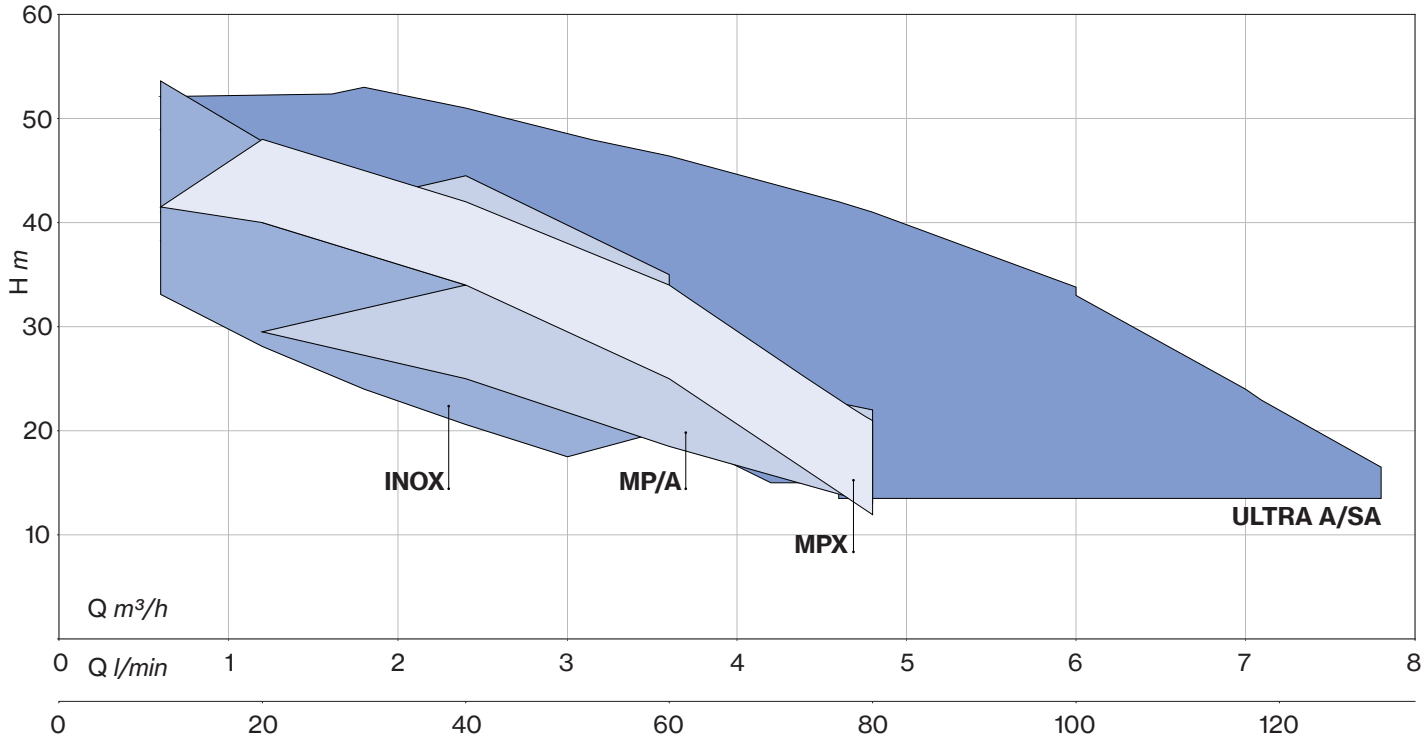


## Cast iron

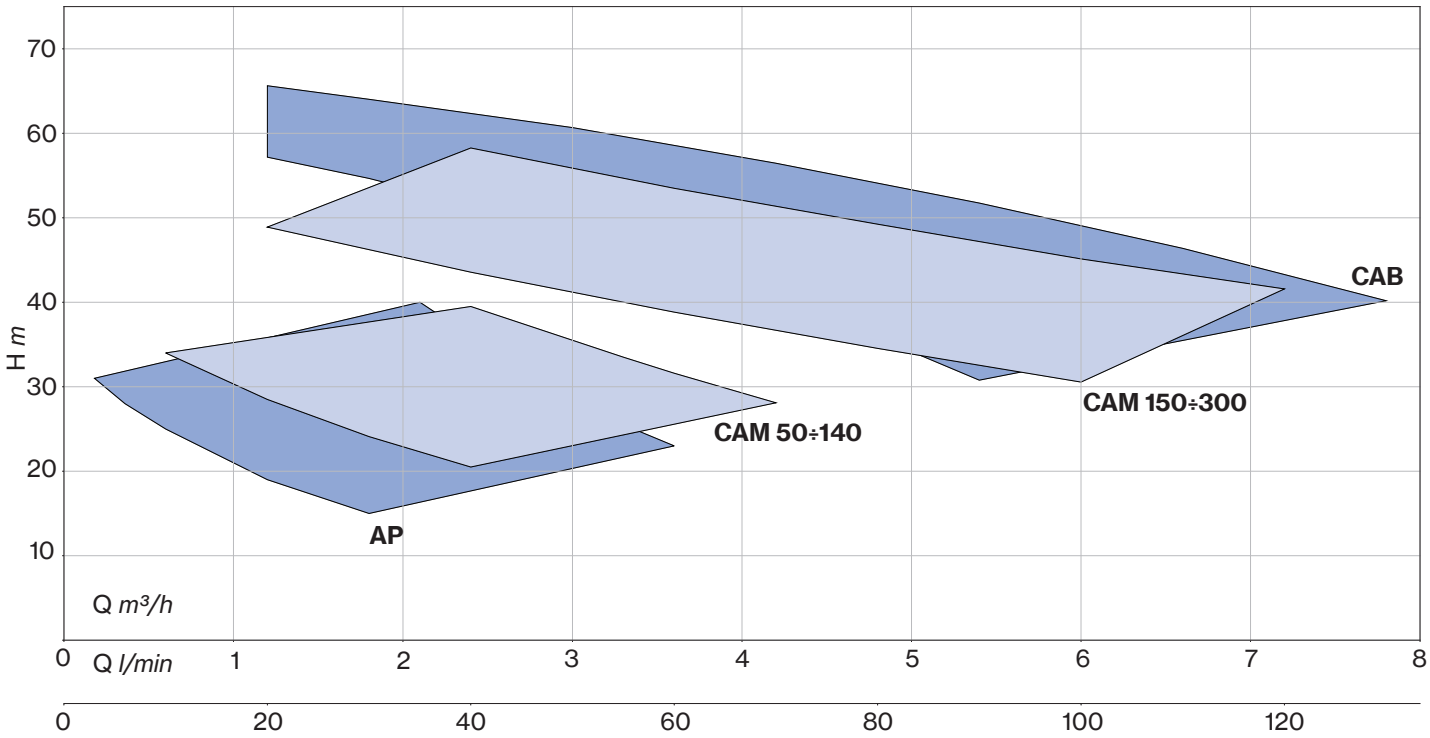

# CAM

## Self-priming

CAM 50N÷140

CAM 150÷300

Self-priming centrifugal pumps for water supplies (even if mixed with gas) in small household systems, connected to autoclave tanks, for transferring liquids and emptying tanks; also used for gardening.

| Construction features | |
|---|---|
| **Pump body** | cast iron |
| **Motor bracket** | aluminum (50N÷140)<br>cast iron (150÷300) |
| **Impeller** | Noryl®, AISI 304 (100N÷140)<br>Noryl®, brass (150÷300) |
| **Mechanical seal** | ceramic-graphite-NBR |
| **Motor shaft** | stainless steel AISI 416 |
| **Liquid temperature** | 0 - 50 °C |
| **Operating pressure** | max 6 bar (50N÷75N)<br>max 7 bar (100N÷140)<br>max 8 bar (150÷300) |

| Motor | |
|---|---|
| **2 poles induction motor** | 3~ 230/400V - 50Hz<br>1~ 230V - 50Hz<br>(with thermal protection) |
| **Insulation class** | F |
| **Protection degree** | IPX4 |

**CAMT 100N /62**

- impeller: **0** Noryl®; **1** brass (150÷300); **2** AISI 304 (100N÷140)
- motor bracket: **0** cast iron (150÷300); **6** aluminum (50N÷140)
- motor: 1~; **T** 3~
- pump type

| LOTS | | | | |
|---|---|---|---|---|
| TYPE | TRUCK | | CONTAINER | |
| | PALLET (cm) | N° pumps | PALLET (cm) | N° pumps |
| **CAM(T) 50N÷140** | 85×110×145 | 60 | 85×110×190 | 80 |
| **CAM(T) 150÷200** | 80×120×140 | 25 | 80×120×180 | 35 |
| **CAM 300** | 85×110×145 | 20 | 85×110×170 | 24 |
| **CAMT 300** | 80×120×140 | 25 | 80×120×180 | 35 |

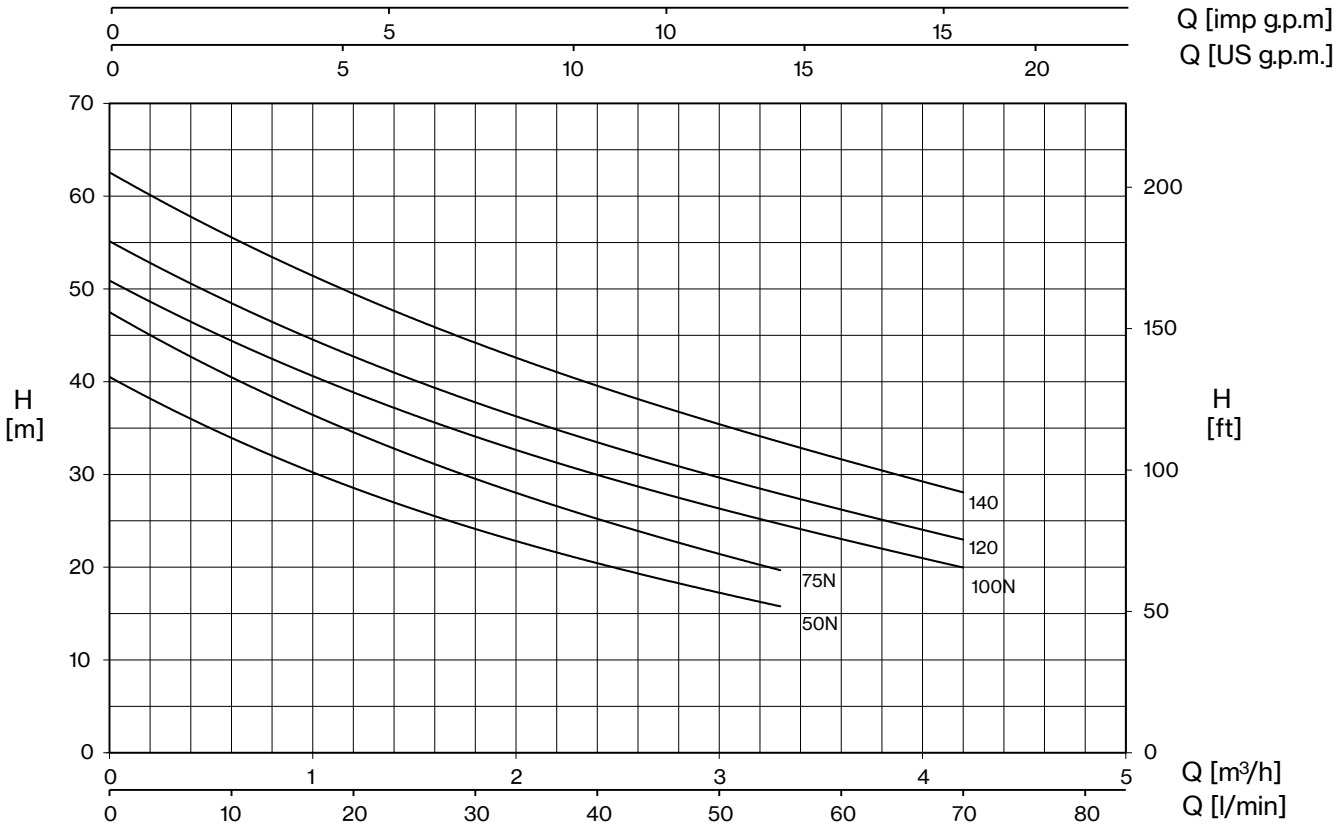


| TYPE - 50 Hz | | P2 | | P1 | | CURRENT | | Q (m³/h - l/min) | | | | | | | | |
|---|---|---|---|---|---|---|---|---|---|---|---|---|---|---|---|---|
| 1~ | 3~ | | | 1~ | 3~ | 1~ 230V | 3~ 400V | 0 | 0,6 | 1,2 | 1,8 | 2,4 | 3 | 3,3 | 3,6 | 4,2 |
| | | | | | | | | 0 | 10 | 20 | 30 | 40 | 50 | 55 | 60 | 70 |
| | | HP | kW | kW | | A | | H (m) | | | | | | | | |
| **CAM 50N** | **CAMT 50N** | 0,6 | 0,44 | 0,7 | 0,67 | 3,1 | 1,3 | 40,5 | 34,0 | 28,5 | 24,1 | 20,5 | 17,2 | 15,8 | | |
| **CAM 75N** | **CAMT 75N** | 0,8 | 0,59 | 0,82 | 0,78 | 3,6 | 1,4 | 47,5 | 40,5 | 34,5 | 29,6 | 25,2 | 21,4 | 19,7 | | |
| **CAM 100N** | **CAMT 100N** | 1 | 0,74 | 1,04 | 0,92 | 4,7 | 1,7 | 50,9 | 44,3 | 38,9 | 34,1 | 30,1 | 26,3 | 24,6 | 23,0 | 20,0 |
| **CAM 120** | **CAMT 120** | 1,2 | 0,88 | 1,14 | 1,07 | 5,2 | 1,9 | 55,1 | 48,5 | 42,6 | 37,8 | 33,5 | 29,7 | 27,9 | 26,2 | 23,0 |
| **CAM 140** | **CAMT 140** | 1,5 | 1,1 | 1,3 | 1,25 | 6,0 | 2,5 | 62,5 | 55,7 | 49,4 | 44,2 | 39,5 | 35,5 | 33,5 | 31,6 | 28,1 |

# CAM

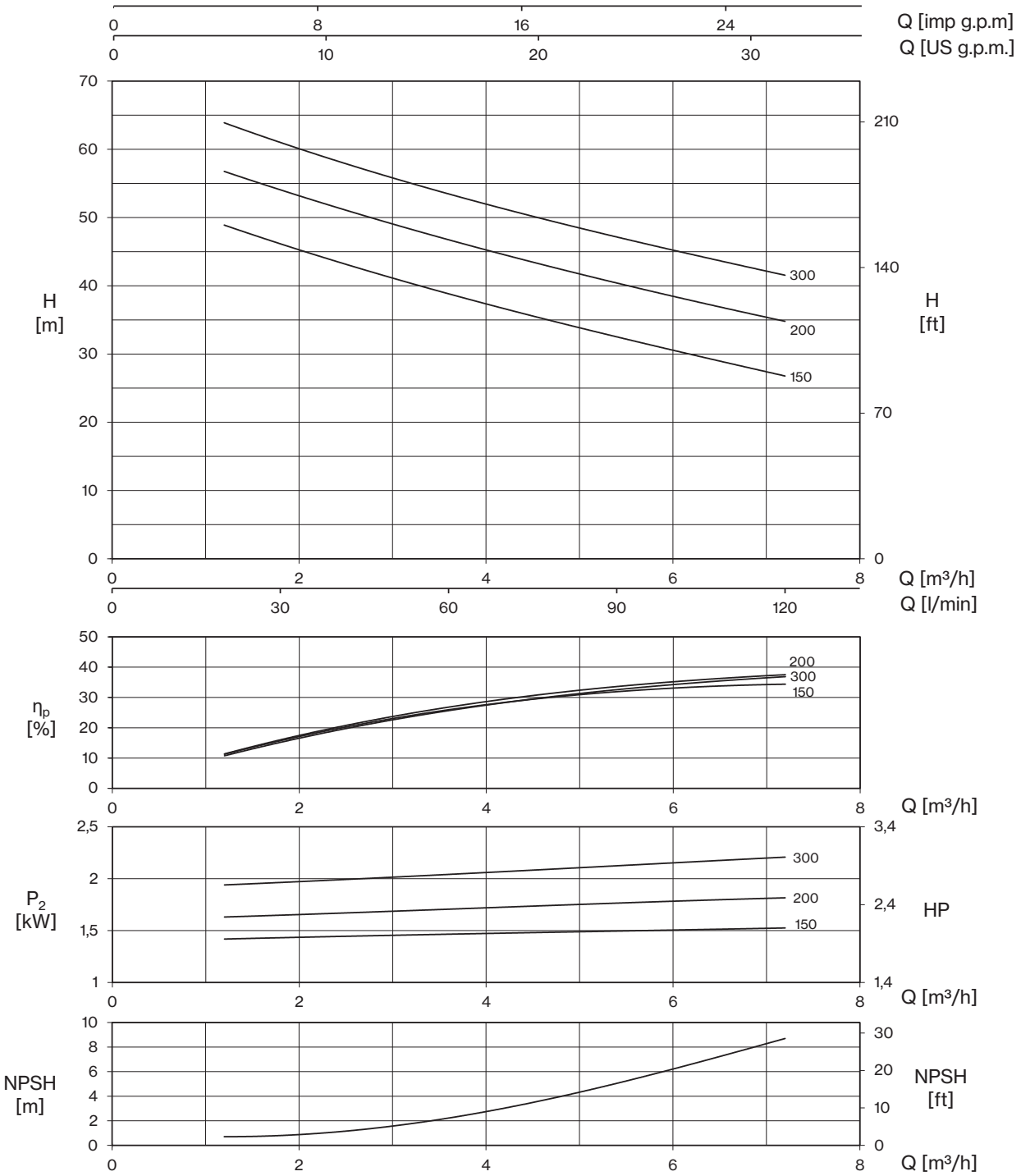


| TYPE - 50 Hz | | P2 | | P1 | | CURRENT | | Q (m³/h - l/min) | | | | | | |
|---|---|---|---|---|---|---|---|---|---|---|---|---|---|---|
| 1~ | 3~ | | | 1~ | 3~ | 1~ 230V | 3~ 400V | 0 | 1,2 | 2,4 | 3,6 | 4,8 | 6 | 7,2 |
| | | | | | | | | 0 | 20 | 40 | 60 | 80 | 100 | 120 |
| | | HP | kW | kW | | A | | H (m) | | | | | | |
| **CAM 150** | **CAMT 150** | 2 | 1,5 | 1,9 | 1,8 | 8,5 | 3,7 | 54,8 | 48,9 | 43,6 | 38,8 | 34,5 | 30,6 | 26,8 |
| **CAM 200** | **CAMT 200** | 2,5 | 1,85 | 2,3 | 2,2 | 10,4 | 4,4 | 62,7 | 56,8 | 51,5 | 46,8 | 42,4 | 38,4 | 34,8 |
| **CAM 300** | **CAMT 300** | 3 | 2,2 | 2,7 | 2,6 | 12,5 | 5,2 | 70,0 | 63,9 | 58,3 | 53,5 | 49,2 | 45,1 | 41,6 |

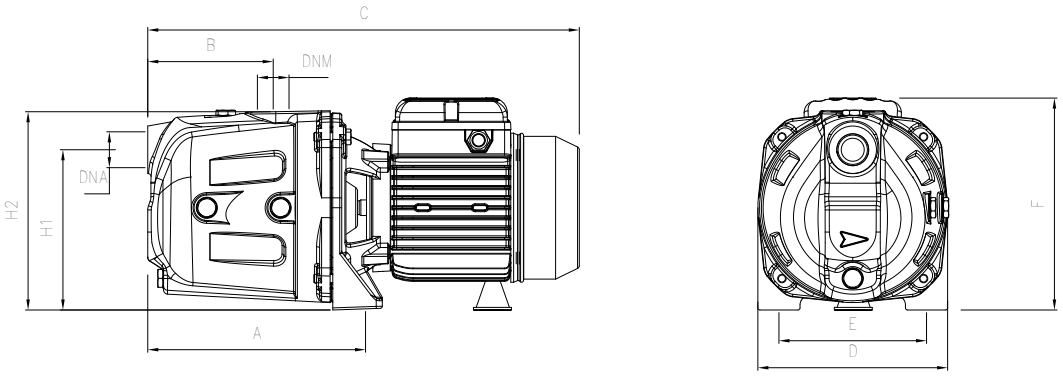


| TYPE | | DIMENSIONS (mm) | | | | | | | | | | | | | Kg |
|---|---|---|---|---|---|---|---|---|---|---|---|---|---|---|---|
| ~1 | ~3 | A | B | C | D | E | F | H1 | H2 | DNA | DNM | I | L | M | |
| **CAM 50N** | **CAMT 50N** | 214 | 119 | 410 | 180 | 140 | 195 | 150 | 185 | | | 440 | 194 | 215 | 12 |
| **CAM 75N** | **CAMT 75N** | 214 | 119 | 410 | 180 | 140 | 195 | 150 | 185 | | | 440 | 194 | 215 | 12,5 |
| **CAM 100N** | **CAMT 100N** | 214 | 119 | 410 | 180 | 140 | 195 | 150 | 185 | 1" G | 1" G | 440 | 194 | 215 | 14 |
| **CAM 120** | **CAMT 120** | 214 | 119 | 410 | 180 | 140 | 195 | 150 | 185 | | | 440 | 194 | 215 | 14,5 |
| **CAM 140** | **CAMT 140** | 214 | 119 | 410 | 180 | 140 | 195 | 150 | 185 | | | 440 | 194 | 215 | 15 |

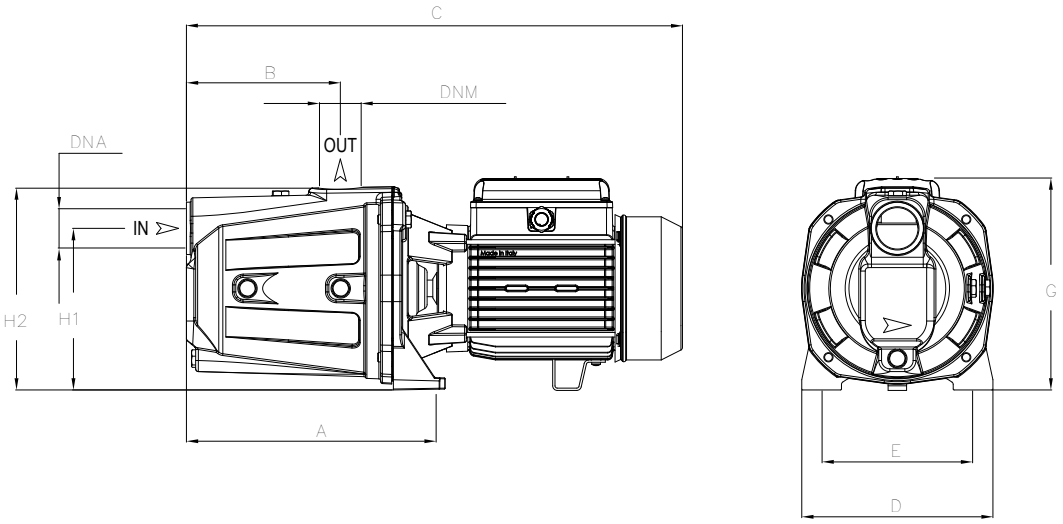


| TYPE | | DIMENSIONS (mm) | | | | | | | | | | | | | Kg | |
|---|---|---|---|---|---|---|---|---|---|---|---|---|---|---|---|---|
| ~1 | ~3 | A | B | C | D | E | G | H1 | H2 | DNA | DNM | I | L | M | ~1 | ~3 |
| **CAM 150** | **CAMT 150** | 269,6 | 167 | 538 | 203 | 165 | 231,5 | 175 | 220 | | | **565** | **235** | **232** | 29 | 30,5 |
| **CAM 200** | **CAMT 200** | 269,6 | 167 | 538 | 203 | 165 | 231,5 | 175 | 220 | 1" ½ G | 1" ¼ G | **565** | **235** | **232** | 30 | 29,5 |
| **CAM 300** | **-** | 269,6 | 167 | 608 | 203 | 165 | 231,5 | 175 | 220 | | | **638** | **230** | **255** | 38 | - |
| **-** | **CAMT 300** | 269,6 | 167 | 538 | 203 | 165 | 231,5 | 175 | 220 | | | **565** | **235** | **232** | - | 30,5 |

# CAM GARDEN

Portable electropumps complete with handle, cable with plug and switch.
The performances depend on adopted pump type.

| TYPE - 50 Hz | P2 | | P1 | Pipe | | Performance | |
|---|---|---|---|---|---|---|---|
| 1~ | HP | kW | kW | Suction | Delivery | Q (l/min) | H (m) |
| **CAM 50N GARDEN** | 0,6 | 0,44 | 0,7 | | | 10-55 | 34,0-15,8 |
| **CAM 75N GARDEN** | 0,8 | 0,59 | 0,82 | | | 10-55 | 40,5-19,7 |
| **CAM 100N GARDEN** | 1 | 0,74 | 1,04 | 1" G | 1" G | 10-70 | 44,3-20,0 |
| **CAM 120 GARDEN** | 1,2 | 0,88 | 1,14 | | | 10-70 | 48,5-23 |
| **CAM 140 GARDEN** | 1,5 | 1,1 | 1,3 | | | 10-70 | 55,7-28,1 |

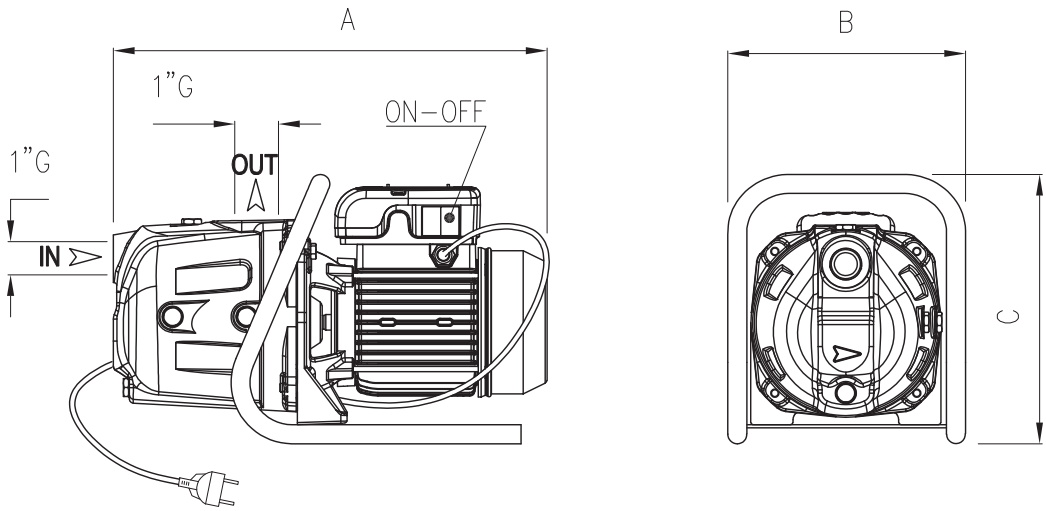


| TYPE | DIMENSIONS (mm) | | |
|---|---|---|---|
| | A | B | C |
| **CAM 50N GARDEN** | 410 | 266 | 252 |
| **CAM 75N GARDEN** | 410 | 266 | 252 |
| **CAM 100N GARDEN** | 410 | 266 | 252 |
| **CAM 120 GARDEN** | 410 | 266 | 252 |
| **CAM 140 GARDEN** | 410 | 266 | 252 |

# INOX

## Self-priming

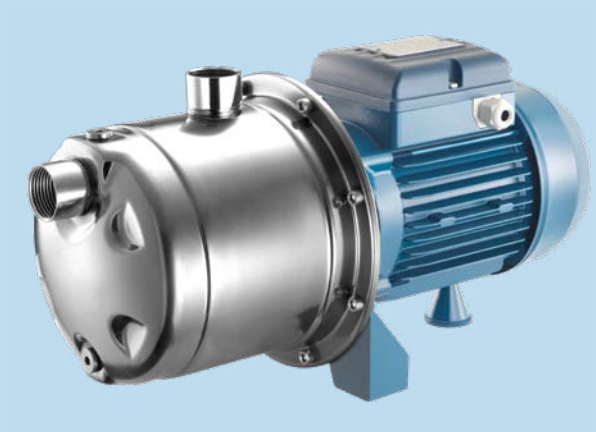

Self-priming centrifugal pumps for domestic applications such as domestic systems where air is mixed with water. Recommended in combination with pressure set for water transfer, rainwater harvesting and garden irrigation systems.

| Construction features | |
|---|---|
| **Pump body** | stainless steel AISI 304 |
| **Motor bracket** | aluminum |
| **Impeller** | Noryl®<br>Noryl®, AISI 304 (100N÷140) |
| **Mechanical seal** | ceramic-graphite-NBR |
| **Motor shaft** | stainless steel AISI 416 |
| **Liquid temperature** | 0 - 50 °C |
| **Operating pressure** | max 8 bar |

| Motor | |
|---|---|
| **2 poles induction motor** | 3~ 230/400V - 50Hz<br>1~ 230V - 50Hz<br>(with thermal protection) |
| **Insulation class** | F |
| **Protection degree** | IPX4 |

**INOXT 100N /6 2**

- impeller: **0** Noryl®; **2** AISI 304 (100N÷140)
- motor bracket: **6** aluminum
- motor: (blank) 1~; **T** 3~
- pump type

| LOTS | | | | |
|---|---|---|---|---|
| TYPE | TRUCK | | CONTAINER | |
| | PALLET (cm) | N° pumps | PALLET (cm) | N° pumps |
| **INOX(T)** | 85×110×150 | 60 | 85×110×190 | 80 |

# INOX

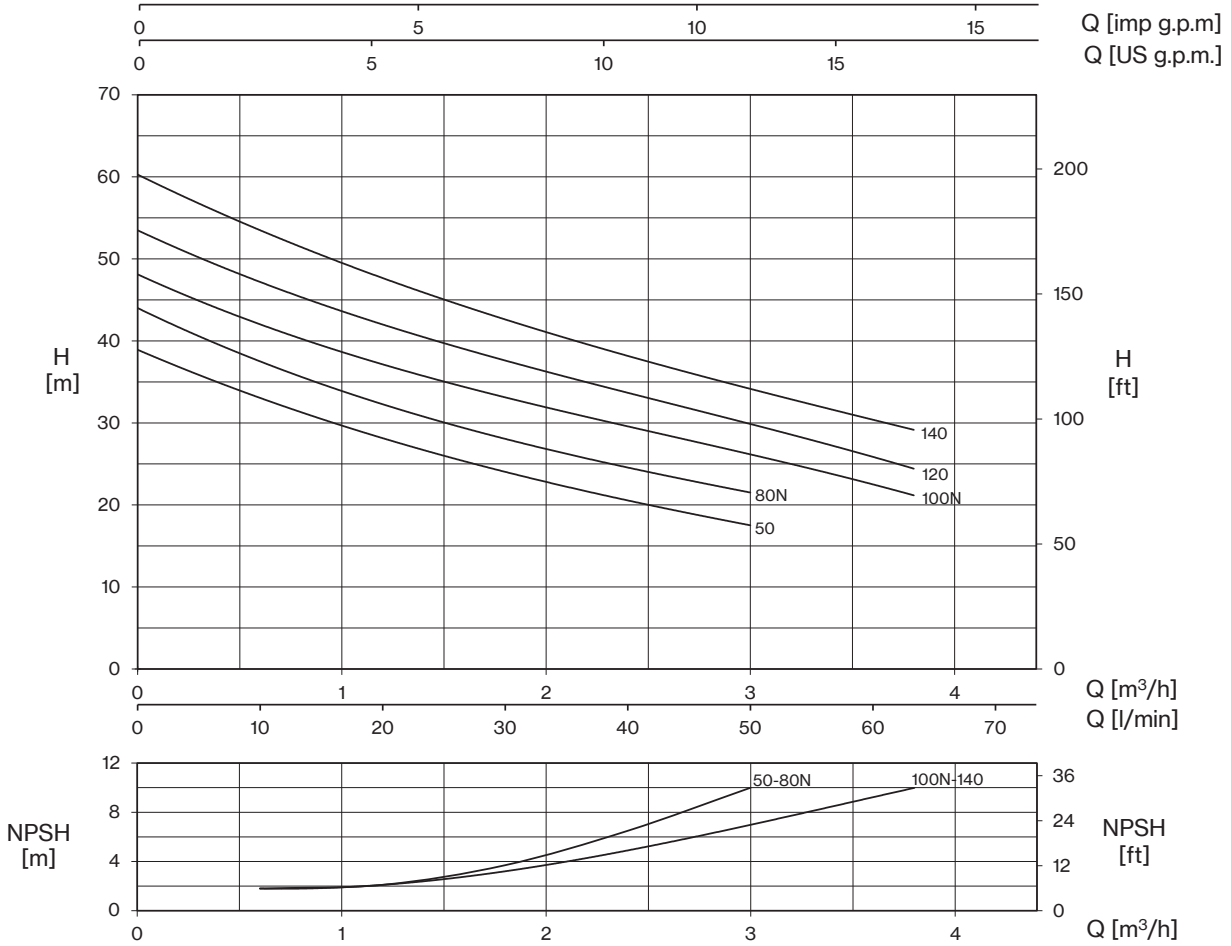


| TYPE - 50 Hz | | P2 | | P1 | | CURRENT | | Q (m³/h - l/min) | | | | | | | |
|---|---|---|---|---|---|---|---|---|---|---|---|---|---|---|---|
| 1~ | 3~ | | | 1~ | 3~ | 1~ 230V | 3~ 400V | 0 | 0,6 | 1,2 | 1,8 | 2,4 | 3 | 3,6 | 3,8 |
| | | | | | | | | 0 | 10 | 20 | 30 | 40 | 50 | 60 | 63,3 |
| | | HP | kW | kW | | A | | H (m) | | | | | | | |
| **INOX 50** | **INOXT 50** | 0,6 | 0,44 | 0,67 | 0,63 | 2,9 | 1,2 | 38,9 | 33,1 | 28,1 | 24,0 | 20,6 | 17,5 | | |
| **INOX 80N** | **INOXT 80N** | 0,8 | 0,59 | 0,75 | 0,76 | 3,3 | 1,4 | 44,0 | 37,5 | 32,3 | 28,0 | 24,6 | 21,5 | | |
| **INOX 100N** | **INOXT 100N** | 1 | 0,74 | 1,04 | 0,92 | 4,7 | 1,7 | 48,0 | 42,3 | 37,0 | 33,0 | 29,6 | 26,2 | 22,7 | 21,0 |
| **INOX 120** | **INOXT 120** | 1,2 | 0,88 | 1,14 | 1,03 | 5,2 | 1,9 | 53,4 | 47,4 | 41,9 | 37,5 | 33,7 | 29,9 | 26,0 | 24,3 |
| **INOX 140** | **INOXT 140** | 1,5 | 1,1 | 1,3 | 1,23 | 6,0 | 2,5 | 60,2 | 53,6 | 47,8 | 42,4 | 38,0 | 34,4 | 30,5 | 29,0 |

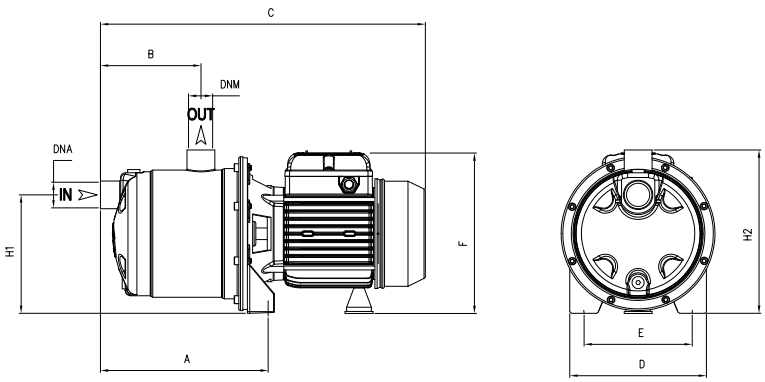


| TYPE | | DIMENSIONS (mm) | | | | | | | | | | | | | Kg |
|---|---|---|---|---|---|---|---|---|---|---|---|---|---|---|---|
| ~1 | ~3 | A | B | C | D | E | F | H1 | H2 | DNA | DNM | I | L | M | |
| **INOX 50** | **INOXT 50** | 208 | 128 | 410 | 175 | 140 | 215 | 153 | 210 | | | 430 | 210 | 235 | 8,5 |
| **INOX 80N** | **INOXT 80N** | 208 | 128 | 410 | 175 | 140 | 215 | 153 | 210 | | | 430 | 210 | 235 | 9,5 |
| **INOX 100N** | **INOXT 100N** | 208 | 128 | 410 | 175 | 140 | 215 | 153 | 210 | 1” G | 1” G | 430 | 210 | 235 | 10,5 |
| **INOX 120** | **INOXT 120** | 208 | 128 | 410 | 175 | 140 | 215 | 153 | 210 | | | 430 | 210 | 235 | 11 |
| **INOX 140** | **INOXT 140** | 208 | 128 | 410 | 175 | 140 | 215 | 153 | 210 | | | 430 | 210 | 235 | 11,5 |

# INOX GARDEN-BOX

Portable electropumps complete with handle, cable with plug and switch.
The performances depend on adopted pump type.

INOX GARDEN

INOX BOX

| TYPE - 50 Hz | P2 | | P1 | Pipe | | Performance | |
|---|---|---|---|---|---|---|---|
| 1~ | HP | kW | kW | Suction | Delivery | Q (l/min) | H (m) |
| **INOX 100N GARDEN-BOX** | 1 | 0,74 | 1,04 | 1" G | 1" G | 10-63,3 | 42,3-21,0 |

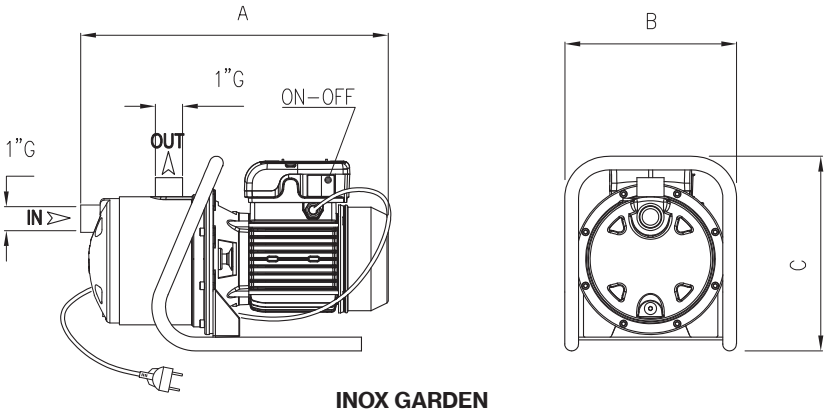


**INOX GARDEN**

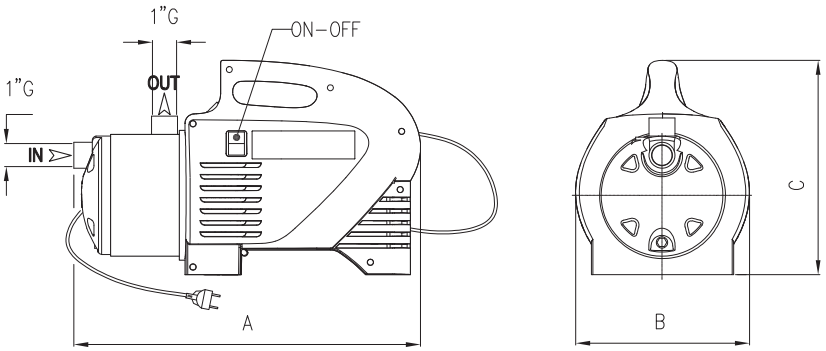


**INOX BOX**

| TYPE | DIMENSIONS (mm) | | |
|---|---|---|---|
| | A | B | C |
| **INOX 100N GARDEN** | 410 | 175 | 285 |
| **INOX 100N BOX** | 429 | 209 | 287 |

# ULTRA A

## Self-priming

Self-priming horizontal multistage stainless steel pumps suitable for domestic use, also in combination with autoclave tank. Suitable for drinking water or glycol, for water treatment, heating, air conditioning and washing systems.

### Construction features

| | |
|---|---|
| **Pump body, mechanical seal housing** | stainless steel AISI 304 |
| **Motor bracket** | aluminum |
| **Impellers, diffusers** | Noryl® |
| **Mechanical seal** | ceramic-graphite-EPDM |
| **Motor shaft** | stainless steel AISI 303 |
| **Liquid temperature** | -5 ÷ +35 °C |
| **Operating pressure** | max 7 bar |

### Motor

| | |
|---|---|
| **2 poles induction motor** | 3~ 230/400V - 50Hz<br>1~ 230V - 50Hz (with thermal protection up to 1.85 kW) |
| **Insulation class** | F |
| **Protection degree** | IPX4 |

**U 3 A - 100 / 5 T -WR**

- pump type: U
- nominal flow-rate m³/h: 3
- self-priming: A
- No. of impellers: 5
- motor: T = 3~; (blank) = 1~
- certification: -WR = WRAS approved; (blank) = standard

WRAS APPROVED PRODUCT
CERTIFICATION MARK

| TYPE | LOTS | | | |
|---|---|---|---|---|
| | TRUCK | | CONTAINER | |
| | PALLET (cm) | N° pumps | PALLET (cm) | N° pumps |
| **U 3A-90/4(T)** | 85×110×160 | 70 | 85×110×185 | 80 |
| **U 3A-100/5(T)** | 90×110×150 | 48 | 90×110×170 | 56 |
| **U 5A-120/4(T)** | 85×110×160 | 70 | 85×110×185 | 80 |
| **U 5A-150/5(T)** | 90×110×150 | 48 | 90×110×170 | 56 |

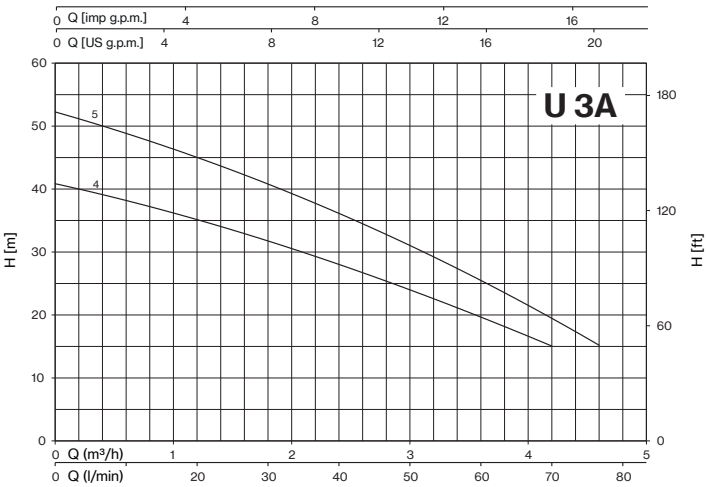


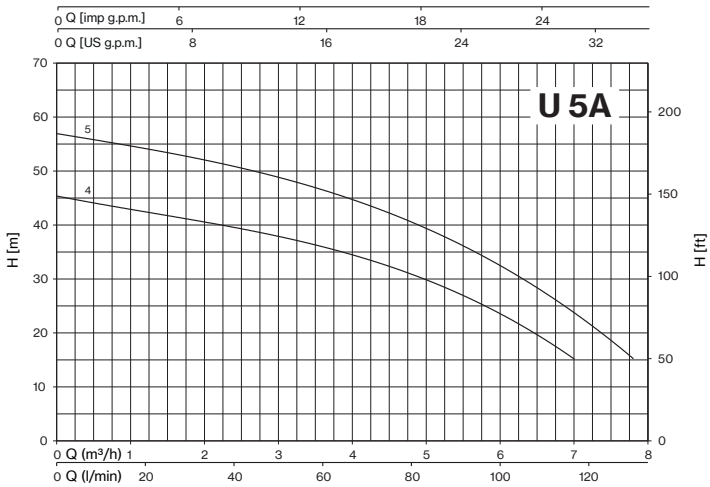


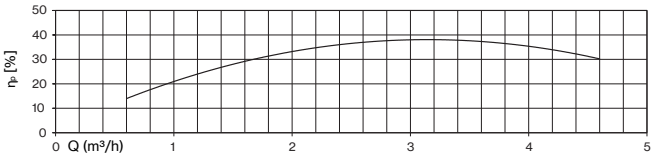


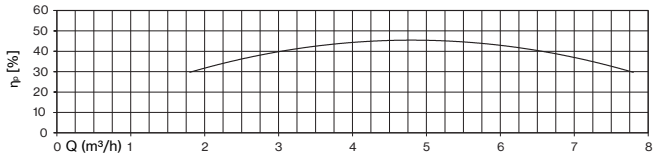


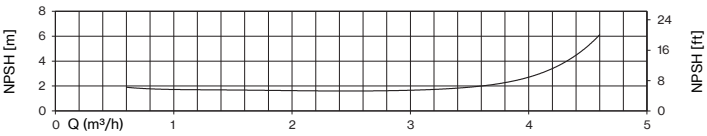


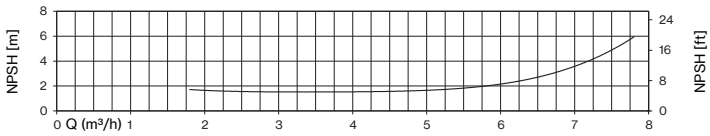


| TYPE - 50 Hz | | P2 | | P1 | | CURRENT | | Q (m³/h - l/min) | | | | | | | | | | | |
|---|---|---|---|---|---|---|---|---|---|---|---|---|---|---|---|---|---|---|---|
| 1~ | 3~ | | | 1~ | 3~ | 1~ 230V | 3~ 400V | 0 | 0,6 | 1,2 | 1,8 | 2,4 | 3,6 | 4,2 | 4,6 | 4,8 | 6 | 7 | 7,8 |
| | | | | | | | | 0 | 10 | 20 | 30 | 40 | 60 | 70 | 76,7 | 80 | 100 | 116,7 | 130 |
| | | HP | kW | kW | | A | | H (m) | | | | | | | | | | | |
| **U 3A-90/4** | **U 3A-90/4T** | 0,9 | 0,66 | 0,9 | 0,88 | 4 | 1,8 | 40,8 | 38,3 | 35,1 | 31,8 | 27,9 | 19,8 | 15,0 | | | | | |
| **U 3A-100/5** | **U 3A-100/5T** | 1 | 0,75 | 1,06 | 1,01 | 4,8 | 1,9 | 52,2 | 48,9 | 45,1 | 40,8 | 36,0 | 25,4 | 19,8 | 15,0 | | | | |
| **U 5A-120/4** | **U 5A-120/4T** | 1,2 | 0,9 | 1,13 | 1,13 | 5,2 | 2,5 | 45,3 | | | 41,3 | 39,6 | 35,6 | 33,4 | 31,7 | 30,8 | 24,0 | 15,0 | |
| **U 5A-150/5** | **U 5A-150/5T** | 1,5 | 1,1 | 1,47 | 1,39 | 6,8 | 2,8 | 56,8 | | | 53,0 | 51,0 | 46,1 | 43,2 | 41,2 | 40,1 | 33,0 | 24,0 | 15,0 |

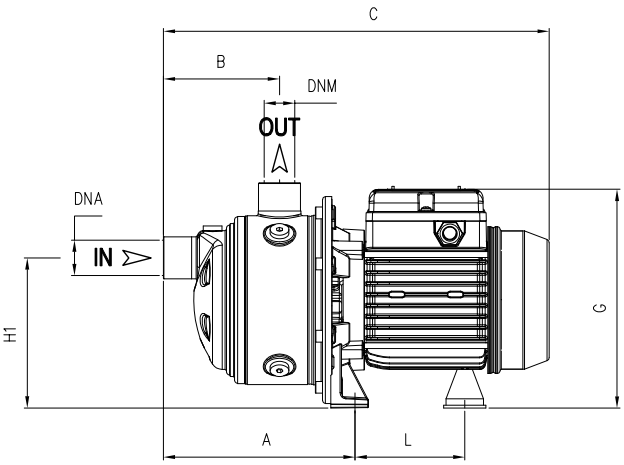


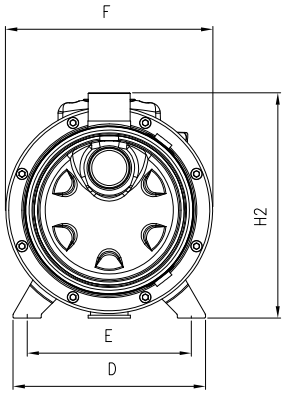


| TYPE | | DIMENSIONS (mm) | | | | | | | | | | | | Kg |
|---|---|---|---|---|---|---|---|---|---|---|---|---|---|---|
| ~1 | ~3 | A | B | C | D | E | F | G | L | H1 | H2 | DNA | DNM | |
| **U 3A-90/4** | **U 3A-90/4T** | 238,8 | 175 | 405 | 164 | 140 | 176 | 190 | 93,7 | 128 | 192 | 1” G | 1” G | 9 |
| **U 3A-100/5** | **U 3A-100/5T** | 262,8 | 199 | 452 | 164 | 140 | 176 | 203 | 104,7 | 128 | 192 | | | 11,5 |
| **U 5A-120/4** | **U 5A-120/4T** | 238,8 | 175 | 428 | 164 | 140 | 176 | 203 | 104,7 | 128 | 192 | | | 11,5 |
| **U 5A-150/5** | **U 5A-150/5T** | 262,8 | 199 | 514 | 164 | 140 | 176 | 217 | 128,2 | 134 | 198 | | | 14,5 |

# ULTRA SA

## Self-priming

Self-priming horizontal multistage stainless steel pumps suitable for domestic use, also in combination with autoclave tank. Suitable for drinking water or glycol, for water treatment, heating, air conditioning and washing systems.

### Construction features

| | |
|---|---|
| **Pump body, mechanical seal housing** | stainless steel AISI 304 |
| **Motor bracket** | aluminum |
| **Impellers, diffusers** | stainless steel AISI 304 |
| **Mechanical seal** | ceramic-graphite-EPDM |
| **Motor shaft** | stainless steel AISI 303 |
| **Liquid temperature** | -15 ÷ +110 °C |
| **Operating pressure** | max 7 bar |

### Motor

| | |
|---|---|
| **2 poles induction motor** | 3~ 230/400V - 50Hz<br>1~ 230V - 50Hz (with thermal protection up to 1.85 kW) |
| **Insulation class** | F |
| **Protection degree** | IPX4 |

**U 3 S A - 100 / 5 T -WR**

- pump type: U
- nominal flow-rate m³/h: 3
- stainless steel impellers and diffusers: S
- self-priming: A
- No. of impellers: 5
- motor: T = 3~; (blank) = 1~
- certification: -WR = WRAS approved; (blank) = standard

WRAS APPROVED PRODUCT
CERTIFICATION MARK

| TYPE | LOTS | | | |
|---|---|---|---|---|
| | TRUCK | | CONTAINER | |
| | PALLET (cm) | N° pumps | PALLET (cm) | N° pumps |
| **U 3SA-90/4(T)** | 85×110×160 | 70 | 85×110×185 | 80 |
| **U 3SA-100/5(T)** | 90×110×150 | 48 | 90×110×170 | 56 |
| **U 5SA-120/4(T)** | 85×110×160 | 70 | 85×110×185 | 80 |
| **U 5SA-150/5(T)** | 90×110×150 | 48 | 90×110×170 | 56 |

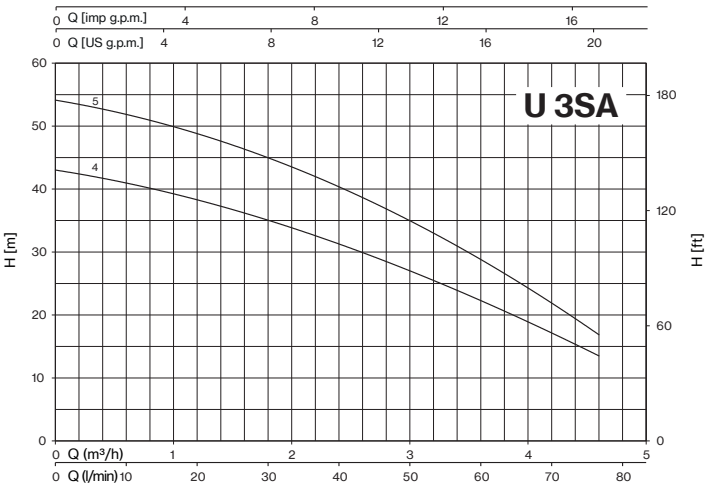


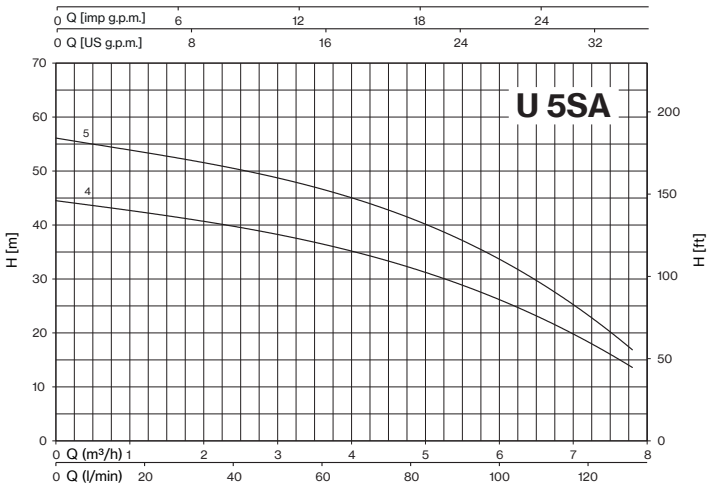


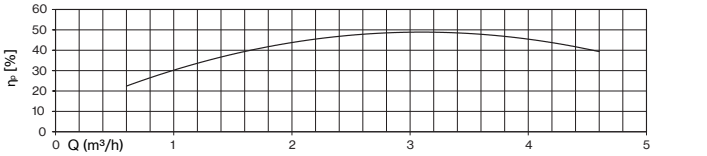


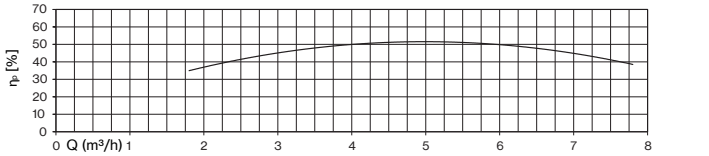


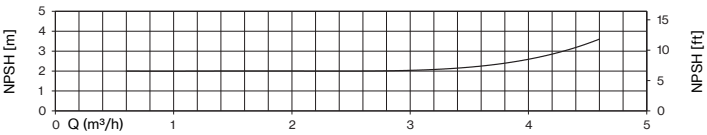


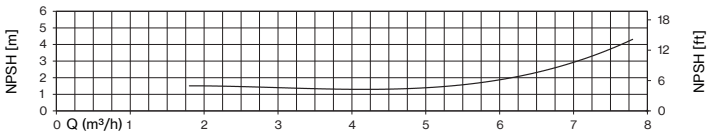


| TYPE - 50 Hz | | P2 | | P1 | | CURRENT | | Q (m³/h - l/min) | | | | | | | | | | |
|---|---|---|---|---|---|---|---|---|---|---|---|---|---|---|---|---|---|---|
| 1~ | 3~ | | | 1~ | 3~ | 1~ 230V | 3~ 400V | 0 | 0,6 | 1,2 | 1,8 | 2,4 | 3,6 | 4,6 | 4,8 | 6 | 7 | 7,8 |
| | | | | | | | | 0 | 10 | 20 | 30 | 40 | 60 | 76,7 | 80 | 100 | 116,7 | 130 |
| | | HP | kW | kW | | A | | H (m) | | | | | | | | | | |
| **U 3SA-90/4** | **U 3SA-90/4T** | 0,9 | 0,66 | 0,83 | 0,8 | 3,6 | 1,7 | 43,0 | 41,0 | 38,3 | 35,0 | 31,3 | 22,3 | 13,5 | | | | |
| **U 3SA-100/5** | **U 3SA-100/5T** | 1 | 0,75 | 0,99 | 0,92 | 4,4 | 1,7 | 54,0 | 52,1 | 48,8 | 44,9 | 40,2 | 29,0 | 16,8 | | | | |
| **U 5SA-120/4** | **U 5SA-120/4T** | 1,2 | 0,9 | 1,09 | 1,08 | 4,9 | 2,4 | 44,5 | | | 41,0 | 40,0 | 36,4 | 32,8 | 32,0 | 26,2 | 18,5 | 13,5 |
| **U 5SA-150/5** | **U 5SA-150/5T** | 1,5 | 1,1 | 1,39 | 1,31 | 6,5 | 2,7 | 56,0 | | | 52,4 | 50,5 | 46,4 | 42,0 | 41,0 | 33,8 | 23,8 | 16,5 |

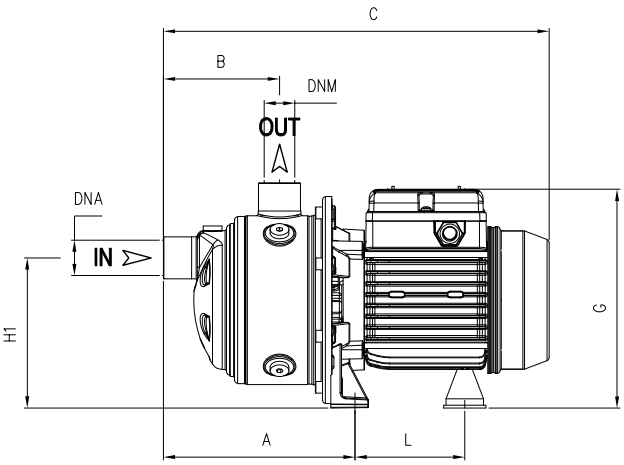


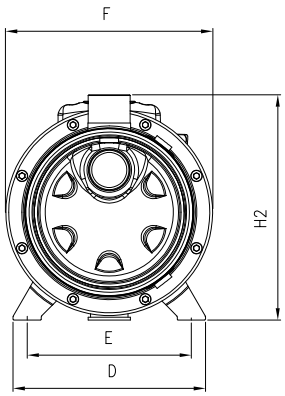


| TYPE | | DIMENSIONS (mm) | | | | | | | | | | | | Kg |
|---|---|---|---|---|---|---|---|---|---|---|---|---|---|---|
| ~1 | ~3 | A | B | C | D | E | F | G | L | H1 | H2 | DNA | DNM | |
| **U 3SA-90/4** | **U 3SA-90/4T** | 238,8 | 175 | 405 | 164 | 140 | 176 | 190 | 93,7 | 128 | 192 | 1" G | 1" G | 10 |
| **U 3SA-100/5** | **U 3SA-100/5T** | 262,8 | 199 | 452 | 164 | 140 | 176 | 203 | 104,7 | 128 | 192 | | | 12,5 |
| **U 5SA-120/4** | **U 5SA-120/4T** | 238,8 | 175 | 428 | 164 | 140 | 176 | 203 | 104,7 | 128 | 192 | | | 12,5 |
| **U 5SA-150/5** | **U 5SA-150/5T** | 262,8 | 199 | 514 | 164 | 140 | 176 | 217 | 128,2 | 134 | 198 | | | 15,5 |

# AP

## Self-priming

AP 75÷100

AP 150÷200

4”

Self-priming centrifugal pumps with 4” external ejector. Suitable for water supply (even if mixed with air) of small domestic systems, that can be connected to an autoclave tank.

### Construction features

| | |
|---|---|
| **Pump body** | cast iron |
| **Motor bracket** | aluminum (75÷100)<br>cast iron (150÷200) |
| **Impeller** | Noryl® or brass |
| **Mechanical seal** | ceramic-graphite-NBR |
| **Motor shaft** | stainless steel AISI 416 (75÷100)<br>stainless steel AISI 303 hydraulic part (150-200) |
| **Liquid temperature** | 0 - 50 °C |
| **Operating pressure** | max 8 bar |

### Motor

| | |
|---|---|
| **2 poles induction motor** | 3~ 230/400V - 50Hz<br>1~ 230V - 50Hz<br>(with thermal protection) |
| **Insulation class** | F |
| **Protection degree** | IPX4 |

**APT 100-4"/0 0**

- impeller: **0** Noryl® / **1** brass
- motor bracket: **0** cast iron (150÷200) / **6** aluminum (75÷100)
- external ejector: **4"** well casing
- motor: 1~ / **T** 3~
- pump type

| LOTS | | | | |
|---|---|---|---|---|
| TYPE | TRUCK | | CONTAINER | |
| | PALLET (cm) | N° pumps | PALLET (cm) | N° pumps |
| **AP(T) 75÷100** | 85×110×145 | 60 | 85×110×190 | 80 |
| **AP(T) 150÷200** | 80×120×140 | 35 | 80×120×190 | 49 |

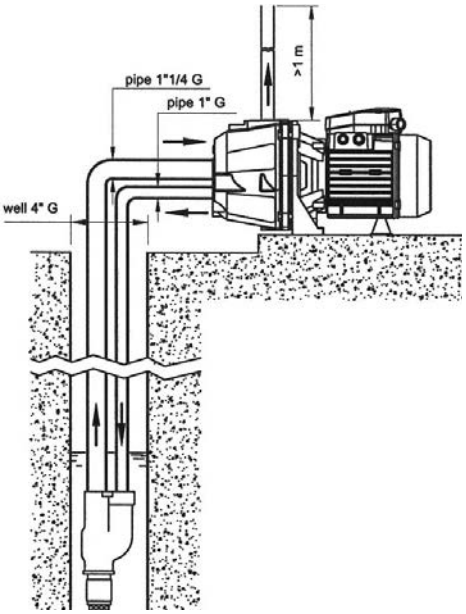


| TYPE - 50 Hz | | P2 | | P1 | | CURRENT | | Ejector type | Suction depth. m | Q (m³/h - l/min) | | | | | | | | | |
|---|---|---|---|---|---|---|---|---|---|---|---|---|---|---|---|---|---|---|---|
| | | | | | | | | | | 0,18 | 0,36 | 0,6 | 0,9 | 1,2 | 1,5 | 1,8 | 2,1 | 3 | 3,6 |
| | | | | | | | | | | 3 | 6 | 10 | 15 | 20 | 25 | 30 | 35 | 50 | 60 |
| 1~ | 3~ | HP | kW | 1~ kW | 3~ kW | 1~ 230V A | 3~ 400V A | | | H (m) | | | | | | | | | |
| **AP 75** | **APT 75** | 0,8 | 0,59 | 0,8 | 0,81 | 3,7 | 1,4 | P 20 | 15 | 31 | 28 | 25 | 22 | 19 | 17 | 15 | 12 | | |
| | | | | | | | | | 20 | 28 | 23 | 18 | 15 | 13 | 11 | | | | |
| | | | | | | | | P 30 | 25 | 22 | 16 | 11 | 8 | | | | | | |
| | | | | | | | | | 30 | 14 | 8 | | | | | | | | |
| **AP 100** | **APT 100** | 1 | 0,74 | 1,02 | 1,05 | 4,7 | 2,3 | P 20 | 15 | 40 | 37 | 34 | 30 | 27 | 24 | 21 | 18 | | |
| | | | | | | | | | 20 | 37 | 34 | 30 | 25 | 21 | 17 | | | | |
| | | | | | | | | P 30 | 25 | 30 | 25 | 20 | 14 | 11 | | | | | |
| | | | | | | | | | 30 | 14 | 8 | | | | | | | | |
| | | | | | | | | | 35 | 12 | 4 | | | | | | | | |
| **AP 150** | **APT 150** | 2 | 1,5 | 1,8 | 1,7 | 8,2 | 3,6 | P 20 | 15 | | | | | | | 42 | 35 | 25 | 21 |
| | | | | | | | | | 20 | | | | | | 50 | 37 | 30 | 21 | |
| | | | | | | | | | 25 | | | | | | 45 | 34 | 27 | | |
| | | | | | | | | P 30 | 35 | | | | 49 | 41 | 20 | | | | |
| | | | | | | | | | 40 | | | 48 | 40 | | | | | | |
| | | | | | | | | | 50 | | 49 | 43 | 20 | | | | | | |
| **AP 200** | **APT 200** | 2,5 | 1,85 | 2,2 | 2,1 | 9,9 | 4,3 | P 20 | 15 | | | | | | | | 46 | 35 | 30 |
| | | | | | | | | | 20 | | | | | | | 48 | 43 | 32 | 27 |
| | | | | | | | | | 25 | | | | | | 50 | 44 | 40 | 28 | 23 |
| | | | | | | | | P 30 | 35 | | | | | | | 28 | 20 | | |
| | | | | | | | | | 40 | | | | 46 | 30 | | | | | |
| | | | | | | | | | 50 | | | 49 | 40 | | | | | | |

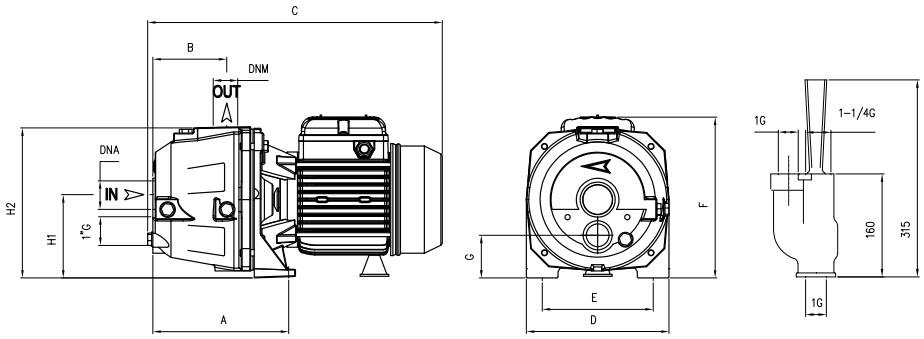


| TYPE | | DIMENSIONS (mm) | | | | | | | | | | | | | | Kg |
|---|---|---|---|---|---|---|---|---|---|---|---|---|---|---|---|---|
| -1 | -3 | A | B | C | D | E | F | G | H1 | H2 | DNA | DNM | I | L | M | |
| **AP 75** | **APT 75** | 168 | 82 | 360 | 180 | 140 | 195 | 52 | 97 | 188 | 1" ¼ G | 1" G | 440 | 200 | 225 | 16 |
| **AP 100** | **APT 100** | 168 | 82 | 360 | 180 | 140 | 195 | 52 | 97 | 188 | | | 440 | 200 | 225 | 18 |
| **AP 150** | **APT 150** | 125 | 74 | 415 | 220 | 177 | 230 | 60 | 112 | 240 | | | 525 | 230 | 280 | 28,5 |
| **AP 200** | **APT 200** | 125 | 74 | 415 | 220 | 177 | 230 | 60 | 112 | 240 | | | 525 | 230 | 280 | 29 |

# CAB

## Self-priming

Self-priming centrifugal pumps for water supply (also mixed with air) of small and medium domestic and civil installations, that can be connected to an autoclave tank.

| Construction features | |
|---|---|
| **Pump body** | cast iron |
| **Motor bracket** | cast iron |
| **Impeller** | Noryl® or brass |
| **Mechanical seal** | ceramic-graphite-NBR |
| **Motor shaft** | stainless steel AISI 303 hydraulic side |
| **Liquid temperature** | 0 - 50 °C |
| **Operating pressure** | max 8 bar |

| Motor | |
|---|---|
| **2 Poles induction motor** | 3~ 230/400V - 50Hz<br>1~ 230V - 50Hz (with thermal protection) |
| **Insulation class** | F |
| **Protection degree** | IPX4 |

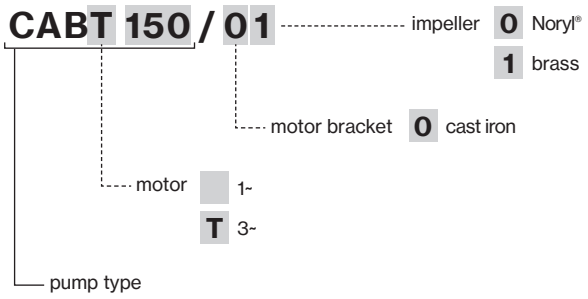


| LOTS | | | | |
|---|---|---|---|---|
| TYPE | TRUCK | | CONTAINER | |
| | PALLET (cm) | N° pumps | PALLET (cm) | N° pumps |
| **CAB(T) 150÷200** | 80×120×140 | 25 | 80×120×190 | 35 |
| **CAB 300** | 85×110×160 | 20 | 85×110×190 | 24 |
| **CABT 300** | 80×120×140 | 25 | 80×120×190 | 35 |

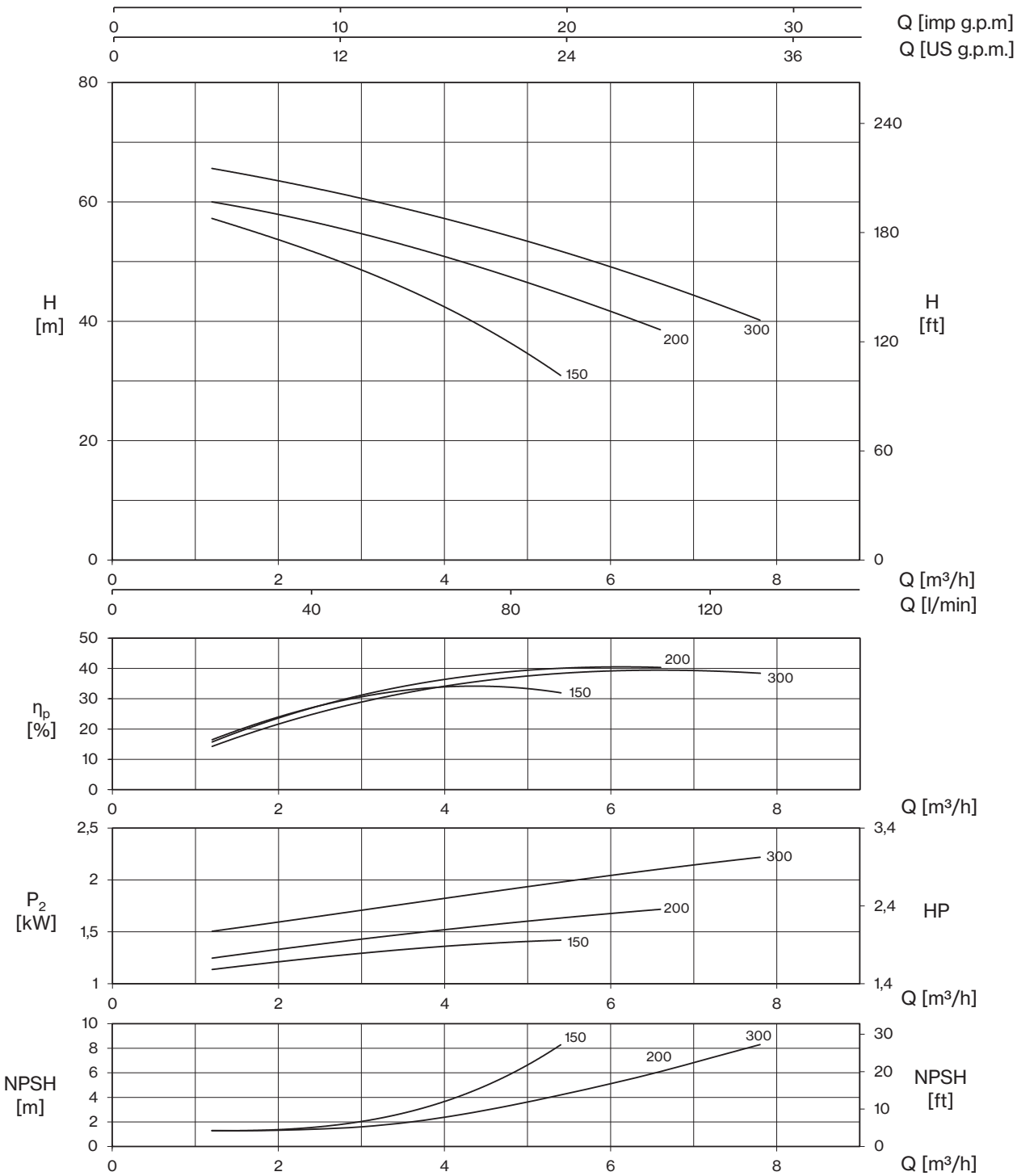


| TYPE - 50 Hz | | P2 | | P1 | | CURRENT | | Q (m³/h - l/min) | | | | | | | |
|---|---|---|---|---|---|---|---|---|---|---|---|---|---|---|---|
| 1~ | 3~ | | | 1~ | 3~ | 1~ 230V | 3~ 400V | 0 | 1,2 | 1,8 | 3 | 4,2 | 5,4 | 6,6 | 7,8 |
| | | | | | | | | 0 | 20 | 30 | 50 | 70 | 90 | 110 | 130 |
| | | HP | kW | kW | | A | | H (m) | | | | | | | |
| **CAB 150** | **CABT 150** | 2 | 1,5 | 1,8 | 1,7 | 8,2 | 3,6 | 61,5 | 57,2 | 54,7 | 48,5 | 40,9 | 30,8 | | |
| **CAB 200** | **CABT 200** | 2,5 | 1,85 | 2,2 | 2,1 | 9,9 | 4,3 | 62,8 | 60,0 | 58,5 | 54,7 | 50,1 | 44,5 | 38,7 | |
| **CAB 300** | **CABT 300** | 3 | 2,2 | 2,8 | 2,6 | 13,0 | 5,2 | 68,4 | 65,6 | 64,0 | 60,7 | 56,5 | 51,7 | 46,4 | 40,2 |

# CAB

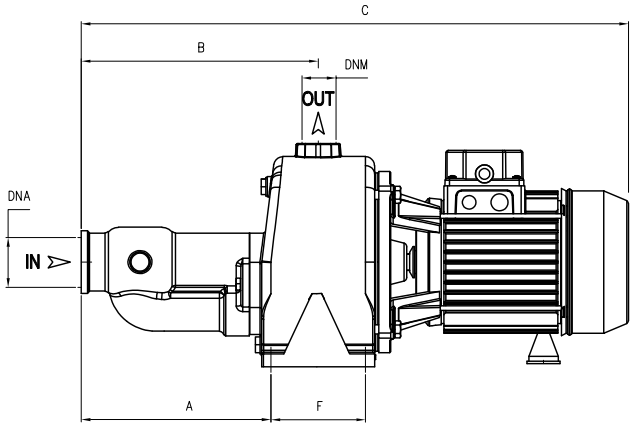


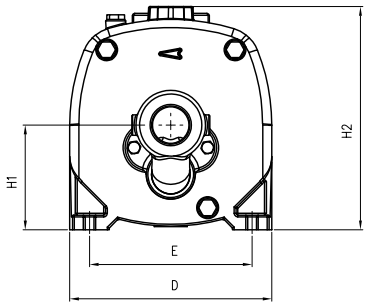


| TYPE | | DIMENSIONS (mm) | | | | | | | | | | | | | | |
|---|---|---|---|---|---|---|---|---|---|---|---|---|---|---|---|---|
| ~1 | ~3 | A | B | C | D | E | F | H1 | H2 | DNA | DNM | I | L | M | ~1 | ~3 |
| **CAB 150** | **CABT 150** | 204 | 257 | 626 | 220 | 177 | 105 | 112 | 240 | 1” ½ G | 1” G | 638 | 230 | 255 | 33 | 34 |
| **CAB 200** | **CABT 200** | 204 | 257 | 626 | 220 | 177 | 105 | 112 | 240 | | | 638 | 230 | 255 | 32,5 | 33 |
| **CAB 300** | **-** | 204 | 257 | 696 | 220 | 177 | 105 | 112 | 240 | | | 777 | 259 | 280 | 42 | - |
| **-** | **CABT 300** | 204 | 257 | 626 | 220 | 177 | 105 | 112 | 240 | | | 638 | 230 | 255 | - | 34 |

# MP/A

## Self-priming

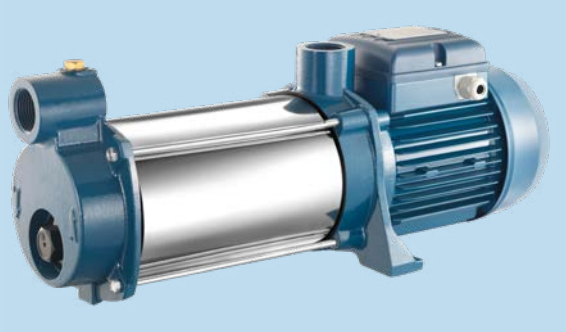

Multi-stage centrifugal pumps, horizontal and self-priming, particularly suitable for constructing small and medium sized pressurisation systems; able to suck liquids mixed with air.

| Construction features | |
|---|---|
| **Pump body** | cast iron |
| **Motor bracket** | cast iron |
| **Impeller** | Noryl® |
| **Mechanical seal** | ceramic-graphite-NBR |
| **Motor shaft** | stainless steel AISI 416 |
| **Liquid temperature** | 0 - 50 °C |
| **Operating pressure** | max 11 bar |

| Motor | |
|---|---|
| **2 poles induction motor** | 3~ 230/400V - 50Hz<br>1~ 230V - 50Hz<br>(with thermal protection) |
| **Insulation class** | F |
| **Protection degree** | IPX4 |

**MP T 100 /4 A**

- self-priming
- No. of impellers
- motor: 1~ / **T** 3~
- pump type

| LOTS | | | | |
|---|---|---|---|---|
| TYPE | TRUCK | | CONTAINER | |
| | PALLET (cm) | N° pumps | PALLET (cm) | N° pumps |
| **MP/A(T)** | 80×120×150 | 48 | 80×120×190 | 64 |

# MP/A

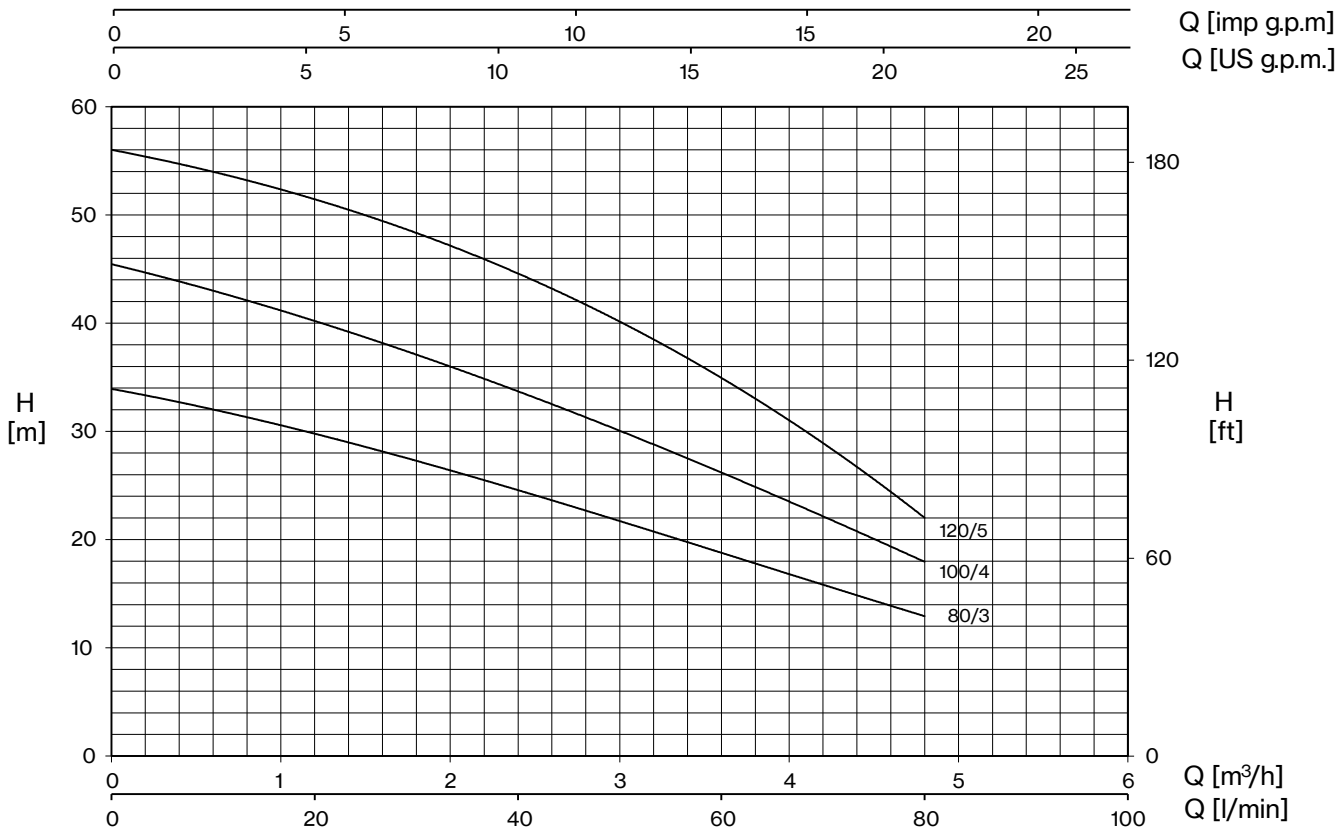


| TYPE - 50 Hz | | P2 | | P1 | | CURRENT | | Q (m³/h - l/min) | | | | |
|---|---|---|---|---|---|---|---|---|---|---|---|---|
| 1~ | 3~ | | | 1~ | 3~ | 1~ 230V | 3~ 400V | 0 | 1,2 | 2,4 | 3,6 | 4,8 |
| | | | | | | | | 0 | 20 | 40 | 60 | 80 |
| | | HP | kW | kW | | A | | H (m) | | | | |
| **MP 80/3A** | **MPT 80/3A** | 0,8 | 0,59 | 0,83 | 0,88 | 3,8 | 1,6 | 34,0 | 29,5 | 25,0 | 18,5 | 13,0 |
| **MP 100/4A** | **MPT 100/4A** | 1 | 0,74 | 1,07 | 1,1 | 5,0 | 1,9 | 45,5 | 40,0 | 34,0 | 26,0 | 18,0 |
| **MP 120/5A** | **MPT 120/5A** | 1,2 | 0,88 | 1,27 | 1,33 | 6,1 | 2,3 | 56 | 51,5 | 44,5 | 35,0 | 22,0 |

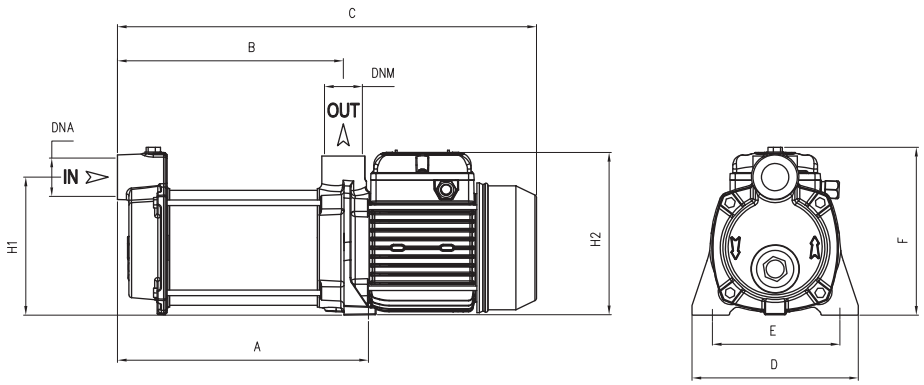


| TYPE | | DIMENSIONS (mm) | | | | | | | | | | | | | Kg |
|---|---|---|---|---|---|---|---|---|---|---|---|---|---|---|---|
| ~1 | ~3 | A | B | C | D | E | F | H1 | H2 | DNA | DNM | I | L | M | |
| **MP 80/3A** | **MPT 80/3A** | 245 | 224 | 425 | 180 | 140 | 185 | 150 | 175 | | | 440 | 200 | 215 | 14 |
| **MP 100/4A** | **MPT 100/4A** | 270 | 240 | 450 | 180 | 140 | 185 | 150 | 175 | 1" G | 1" G | 500 | 200 | 215 | 15,5 |
| **MP 120/5A** | **MPT 120/5A** | 295 | 264 | 475 | 180 | 140 | 185 | 150 | 175 | | | 500 | 200 | 215 | 16 |

# MPX

## Self-priming

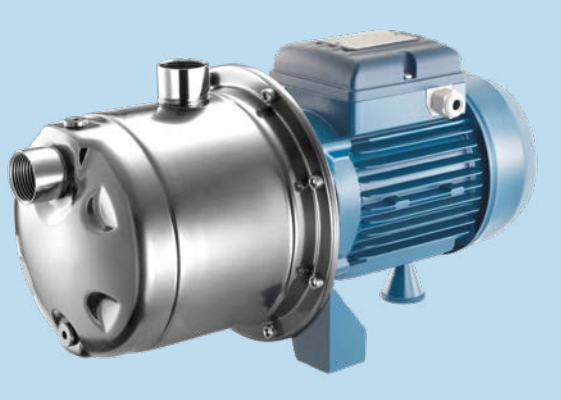

Multi-stage centrifugal pumps, horizontal and self-priming, particularly suitable for constructing small and medium sized pressurisation systems; able to suck liquids mixed with air.

| Construction features | |
|---|---|
| **Pump body** | stainless steel AISI 304 |
| **Motor bracket** | aluminum |
| **Impeller** | Noryl® |
| **Mechanical seal** | ceramic-graphite-NBR |
| **Pump shaft** | stainless steel AISI 416 |
| **Liquid temperature** | 0 - 50 °C |
| **Operating pressure** | max 8 bar |

| Motor | |
|---|---|
| **2 poles induction motor** | 3~ 230/400V - 50Hz<br>1~ 230V - 50Hz<br>(with thermal protection) |
| **Insulation class** | F |
| **Protection degree** | IPX4 |

**MPX 100 /4 T**

- motor: 1~ / **T** 3~
- No. of impellers
- pump type

| LOTS | | | | |
|---|---|---|---|---|
| TYPE | TRUCK | | CONTAINER | |
| | PALLET (cm) | N° pumps | PALLET (cm) | N° pumps |
| **MPX(T)** | 85×110×170 | 60 | 85×110×190 | 80 |

# MPX

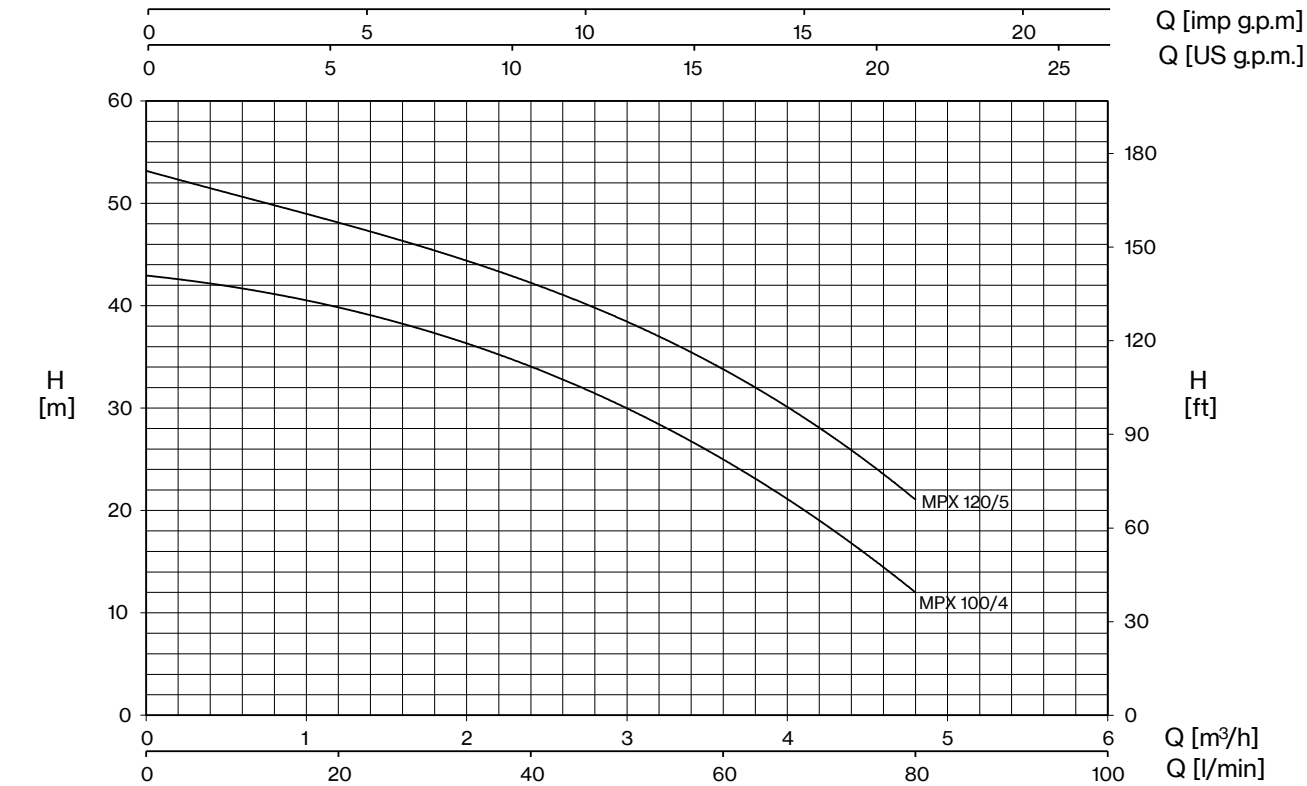


| TYPE - 50 Hz | | P2 | | P1 | | CURRENT | | Q (m³/h - l/min) | | | | | |
|---|---|---|---|---|---|---|---|---|---|---|---|---|---|
| 1~ | 3~ | | | 1~ | 3~ | 1~ 230V | 3~ 400V | 0 | 0,6 | 1,2 | 2,4 | 3,6 | 4,8 |
| | | | | | | | | 0 | 10 | 20 | 40 | 60 | 80 |
| | | HP | kW | kW | | A | | H (m) | | | | | |
| **MPX 100/4** | **MPXT 100/4** | 1 | 0,74 | 1,07 | 1,1 | 5,0 | 1,9 | 43,0 | 41,5 | 40,0 | 34,0 | 25,0 | 12,0 |
| **MPX 120/5** | **MPXT 120/5** | 1,2 | 0,88 | 1,27 | 1,33 | 6,1 | 2,3 | 53,0 | 51,0 | 48,0 | 42,0 | 34,0 | 21,0 |

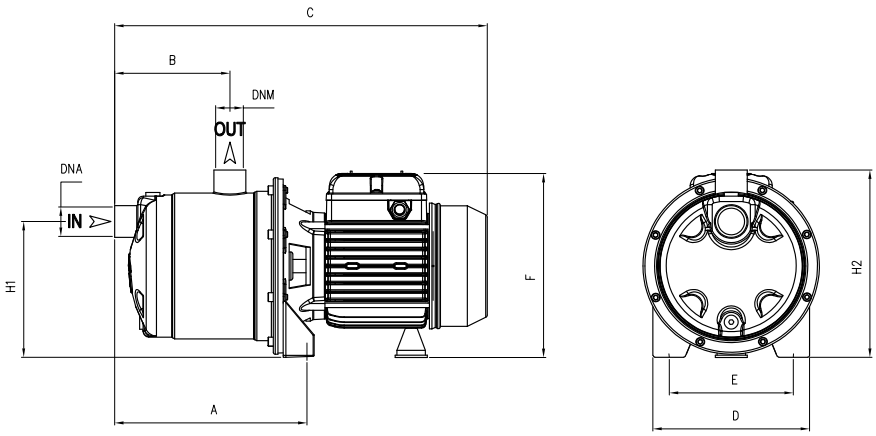


| TYPE | | DIMENSIONS (mm) | | | | | | | | | | | | | Kg |
|---|---|---|---|---|---|---|---|---|---|---|---|---|---|---|---|
| ~1 | ~3 | A | B | C | D | E | F | H1 | H2 | DNA | DNM | I | L | M | |
| **MPX 100/4** | **MPXT 100/4** | 208 | 128 | 410 | 175 | 140 | 215 | 153 | 210 | 1" G | 1" G | 430 | 210 | 235 | 11 |
| **MPX 120/5** | **MPXT 120/5** | 208 | 128 | 410 | 175 | 140 | 215 | 153 | 210 | | | 430 | 210 | 235 | 11,5 |

# MPX GARDEN-BOX

Portable electropumps complete with handle, cable with plug and switch.
The performances depend on adopted pump type.

MPX GARDEN

MPX BOX

| TYPE - 50 Hz | P2 | | P1 | Pipe | | Performance | |
|---|---|---|---|---|---|---|---|
| 1~ | HP | kW | kW | Suction | Delivery | Q (l/min) | H (m) |
| **MPX 100/4 GARDEN-BOX** | 1 | 0,74 | 1,07 | 1" G | 1" G | 10,0-80,0 | 41,5-12,0 |
| **MPX 120/5 GARDEN-BOX** | 1,2 | 0,88 | 1,27 | | | 10,0-80,0 | 51,0-21,0 |

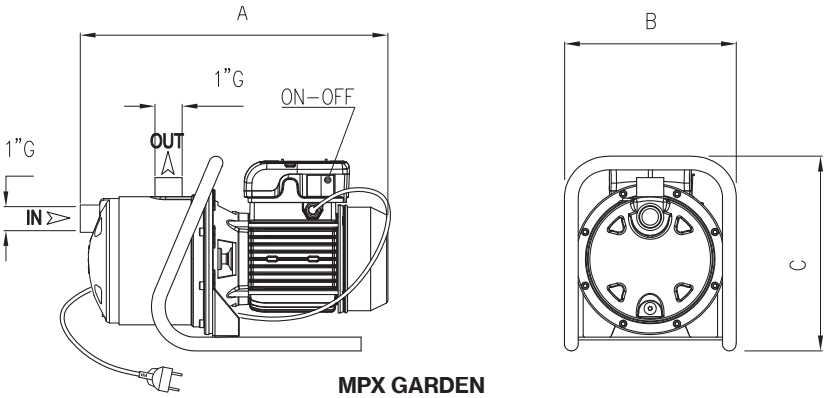


**MPX GARDEN**

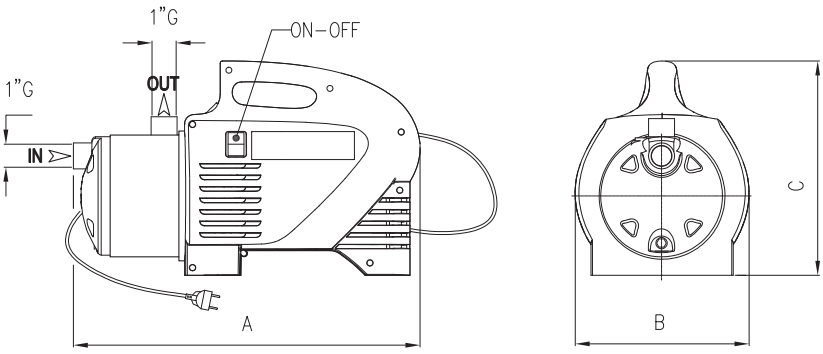


**MPX BOX**

| TYPE | DIMENSIONS (mm) | | |
|---|---|---|---|
| | A | B | C |
| **MPX 100/4 GARDEN** | 410 | 175 | 285 |
| **MPX 120/5 GARDEN** | 410 | 175 | 285 |
| **MPX 100/4 BOX** | 429 | 209 | 287 |
| **MPX 120/5 BOX** | 429 | 209 | 287 |

Pentax®

WATER PUMPS

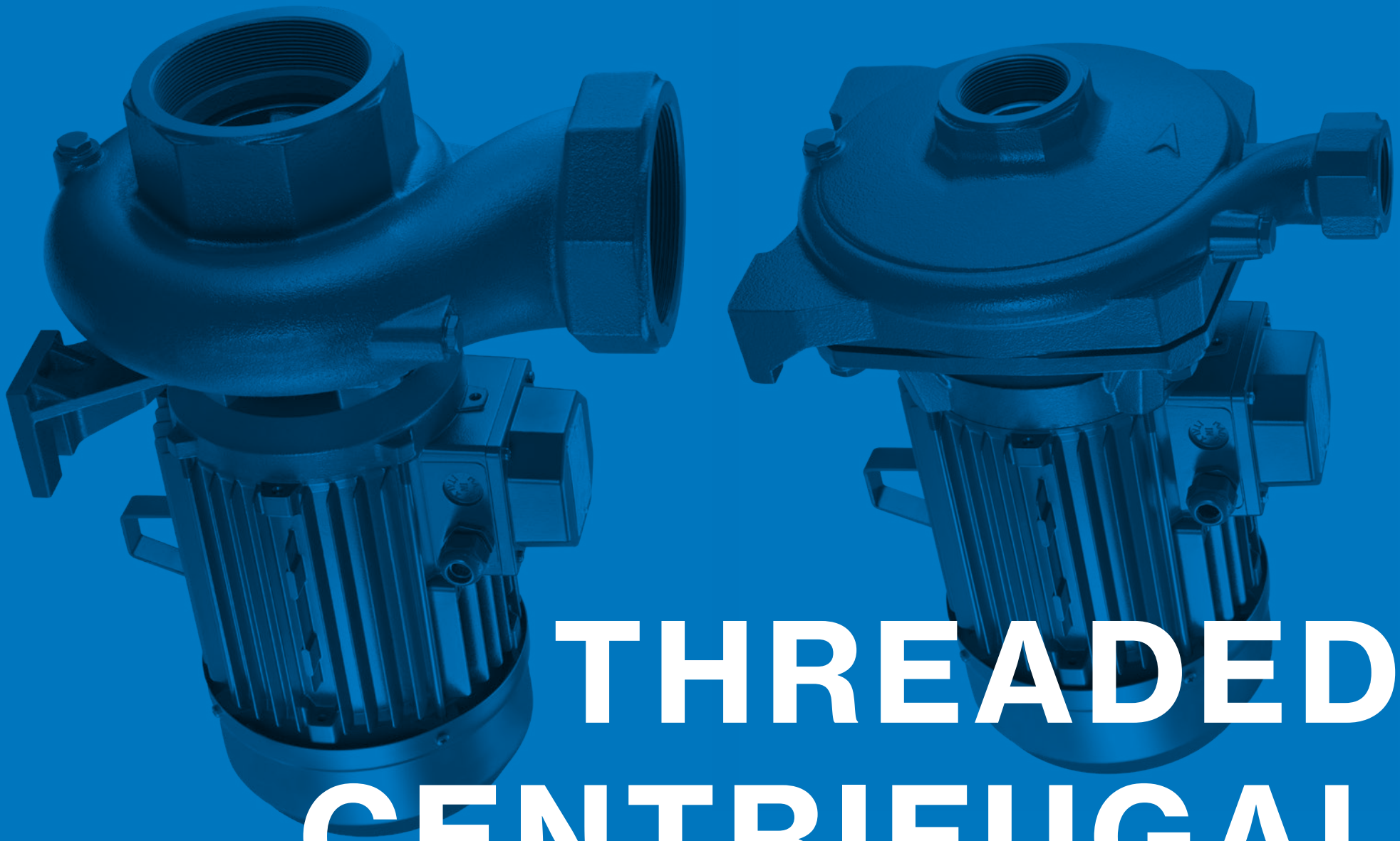

# THREADED CENTRIFUGAL

# THREADED CENTRIFUGAL PUMPS

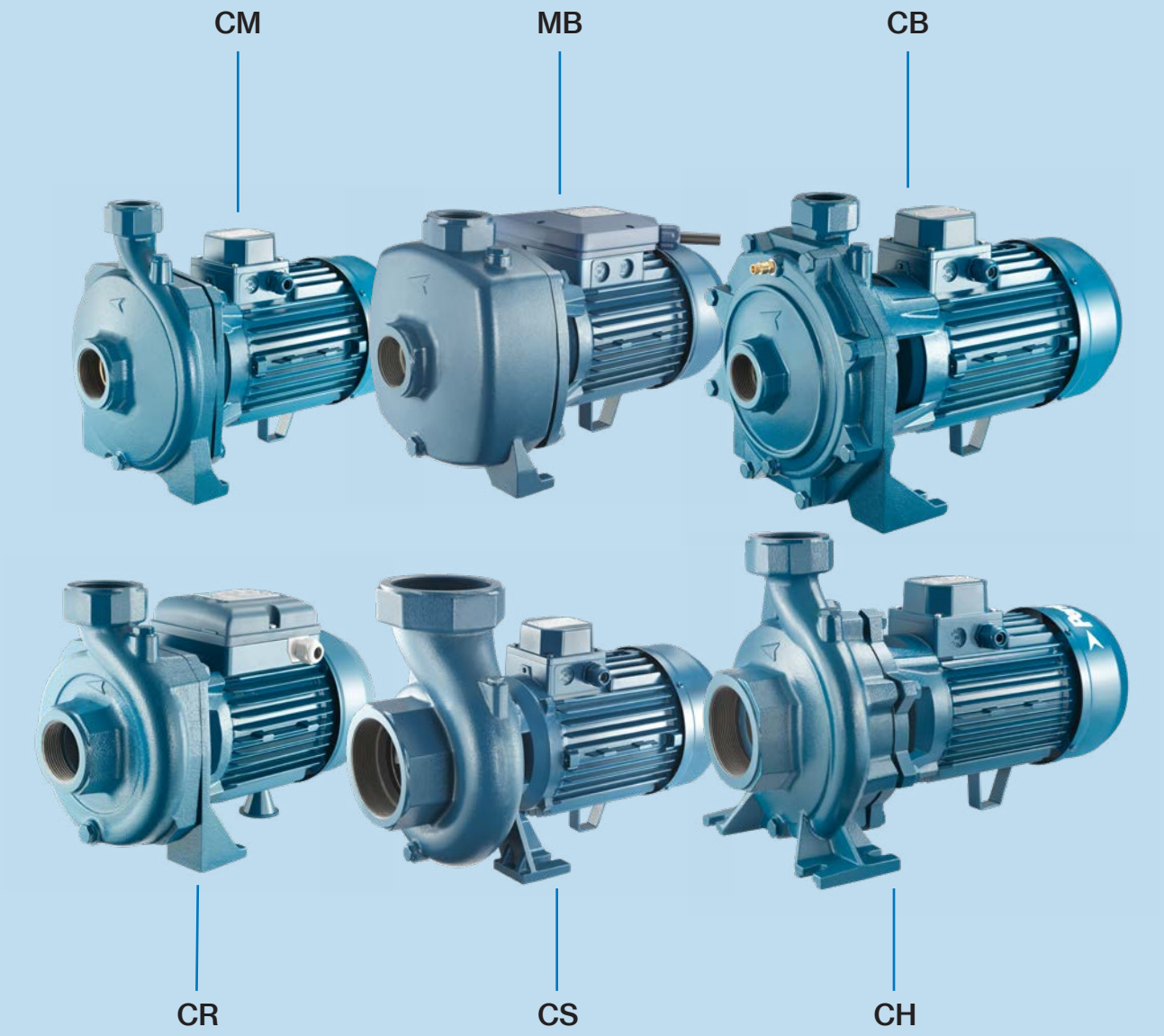


Extremely silent single and double impeller centrifugal pumps, designed for a wide range of applications

**Applications:**

- Water supply
- Pressurization
- Water circulation systems for heating and air conditioning
- Liquid transfer in industry and horticulture

# THREADED CENTRIFUGAL PUMPS

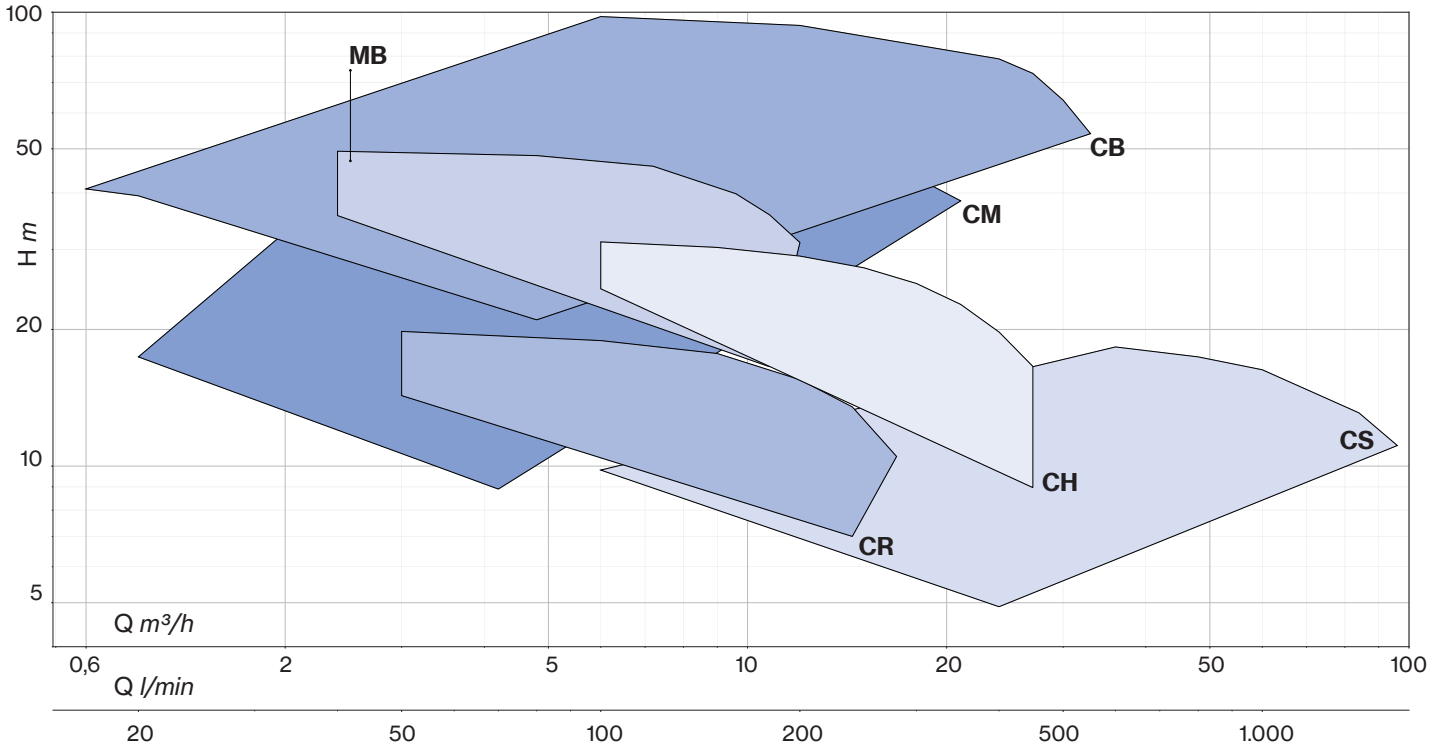

# CM

## Threaded Centrifugal

Single-impeller centrifugal pumps, extremely quiet, suitable for domestic, civil and industrial applications.
The pumps guarantee constant pressure at the variation of flow rates.

### Construction features

| | |
|---|---|
| **Pump body** | cast iron |
| **Motor bracket** | cast iron (45, 50, 164÷550)<br>aluminum (75÷100) |
| **Impeller** | Noryl® (45)<br>Noryl® or brass (50÷550) |
| **Mechanical seal** | ceramic-graphite-NBR |
| **Motor shaft** | stainless steel AISI 416 (45÷100)<br>stainless steel AISI 303 (164÷550) |
| **Liquid temperature** | Noryl® impeller: 0 - 50 °C<br>brass impeller: 0 - 90 °C |
| **Operating pressure** | max 6 bar (45÷100)<br>max 8 bar (164÷550) |

**CMT 100 / 60**

- impeller: **0** Noryl® / **1** brass
- motor bracket: **0** cast iron (45, 50, 164÷550) / **6** aluminum (75÷100)
- motor: (blank) 1~ / **T** 3~
- pump type

### Motor

| | |
|---|---|
| **2 poles induction motor** | 3~ 230/400V - 50Hz<br>1~ 230V - 50Hz (with thermal protection up to MEC 80) |
| **Insulation class** | F |
| **Protection degree** | IPX4 |

| LOTS | | | | |
|---|---|---|---|---|
| TYPE | TRUCK | | CONTAINER | |
| | PALLET (cm) | N° pumps | PALLET (cm) | N° pumps |
| **CM(T) 45÷50** | 80×120×145 | 102 | 80×120×190 | 136 |
| **CM(T) 75÷100** | 85×110×145 | 65 | 85×110×195 | 91 |
| **CM(T) 164÷214** | 85×110×170 | 40 | 85×110×200 | 48 |
| **CM 314** | 85×110×150 | 24 | 85×110×180 | 30 |
| **CMT 314** | 85×110×170 | 40 | 85×110×200 | 48 |
| **CM(T) 400÷550** | 85×110×150 | 24 | 85×110×180 | 30 |

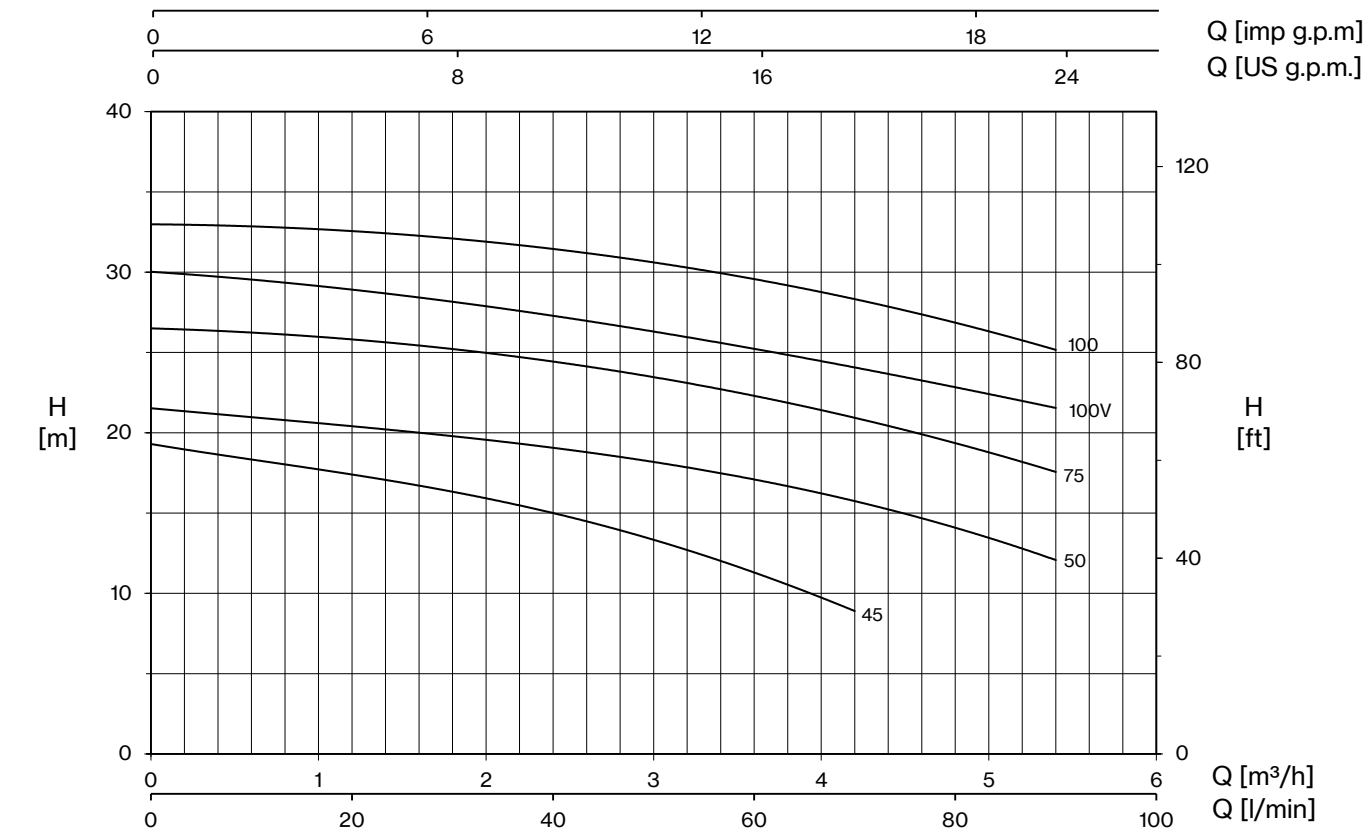


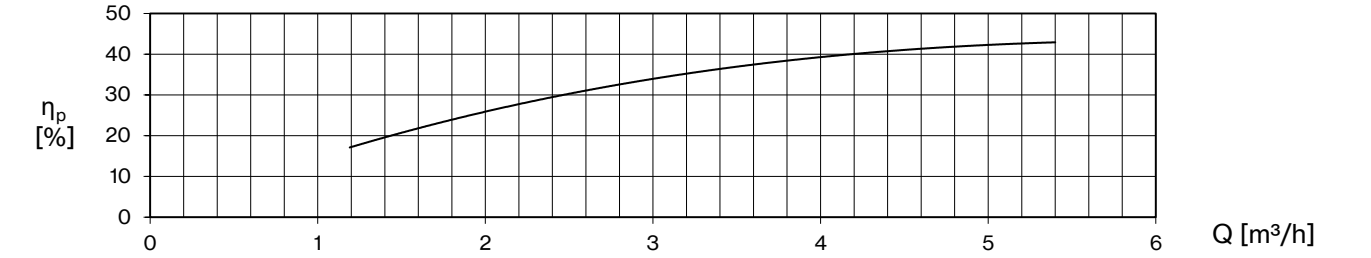


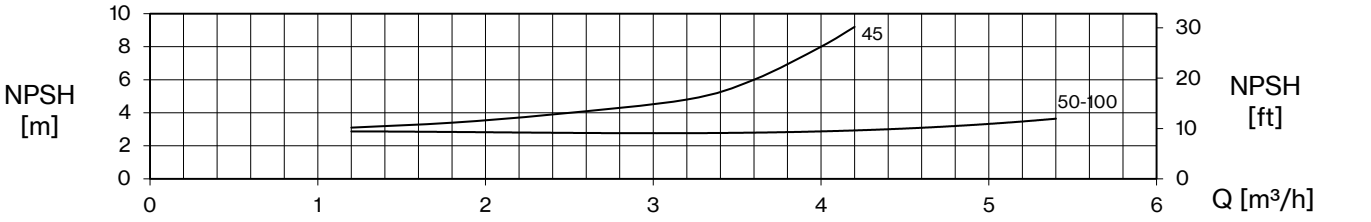


| TYPE - 50 Hz | | P2 | | P1 | | CURRENT | | Q (m³/h - l/min) | | | | | | |
|---|---|---|---|---|---|---|---|---|---|---|---|---|---|---|
| 1~ | 3~ | | | 1~ | 3~ | 1~ 230V | 3~ 400V | 0 | 1,2 | 2,4 | 3,6 | 4,2 | 4,8 | 5,4 |
| | | | | | | | | 0 | 20 | 40 | 60 | 70 | 80 | 90 |
| | | HP | kW | kW | | A | | H (m) | | | | | | |
| **CM 45** | **CMT 45** | 0,4 | 0,3 | 0,51 | 0,56 | 2,3 | 1,0 | 19,3 | 17,4 | 15,0 | 11,3 | 8,9 | | |
| **CM 50** | **CMT 50** | 0,5 | 0,37 | 0,59 | 0,65 | 2,8 | 1,1 | 21,5 | 20,5 | 19,0 | 17,0 | 15,8 | 14,2 | 12,0 |
| **CM 75** | **CMT 75** | 0,8 | 0,59 | 0,9 | 0,94 | 4,5 | 1,7 | 26,5 | 25,8 | 24,5 | 22,2 | 20,9 | 19,5 | 17,5 |
| **CM 100 V** | **-** | 1 | 0,74 | 1,05 | - | 4,6 | - | 30,0 | 29,0 | 27,2 | 25,2 | 24,1 | 22,9 | 21,5 |
| **CM 100** | **CMT 100** | 1 | 0,74 | 1,16 | 1,17 | 5,7 | 2,0 | 33,0 | 32,5 | 31,5 | 29,6 | 28,3 | 26,8 | 25,2 |

# CM

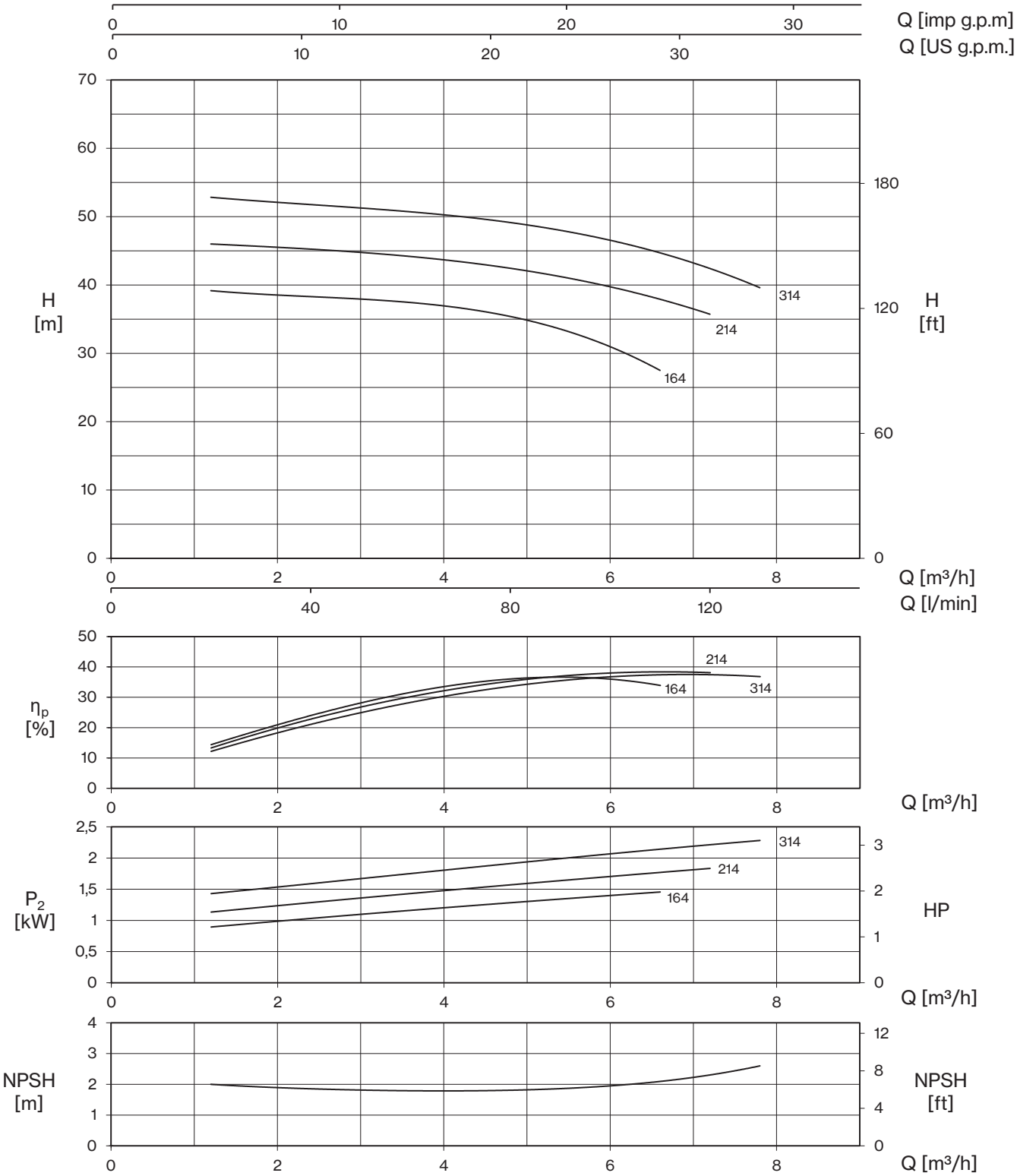


| TYPE - 50 Hz | | P2 | | P1 | | CURRENT | | Q (m³/h - l/min) | | | | | | | | |
|---|---|---|---|---|---|---|---|---|---|---|---|---|---|---|---|---|
| 1~ | 3~ | | | 1~ | 3~ | 1~ 230V | 3~ 400V | 0 | 1,2 | 2,4 | 3,6 | 4,8 | 6 | 6,6 | 7,2 | 7,8 |
| | | | | | | | | 0 | 20 | 40 | 60 | 80 | 100 | 110 | 120 | 130 |
| | | HP | kW | kW | | A | | H (m) | | | | | | | | |
| **CM 164** | **CMT 164** | 2 | 1,5 | 1,8 | 1,8 | 8,2 | 3,7 | 39,4 | 39,1 | 38,6 | 37,2 | 35,2 | 31,5 | 27,2 | | |
| **CM 214** | **CMT 214** | 2,5 | 1,85 | 2,3 | 2,2 | 10,4 | 4,4 | 46,3 | 45,9 | 45,5 | 44,1 | 42,1 | 39,8 | 38,2 | 35,5 | |
| **CM 314** | **CMT 314** | 3 | 2,2 | 2,8 | 2,6 | 13,0 | 5,2 | 53,2 | 52,7 | 52,1 | 50,8 | 48,8 | 46,3 | 45,0 | 42,9 | 39,2 |

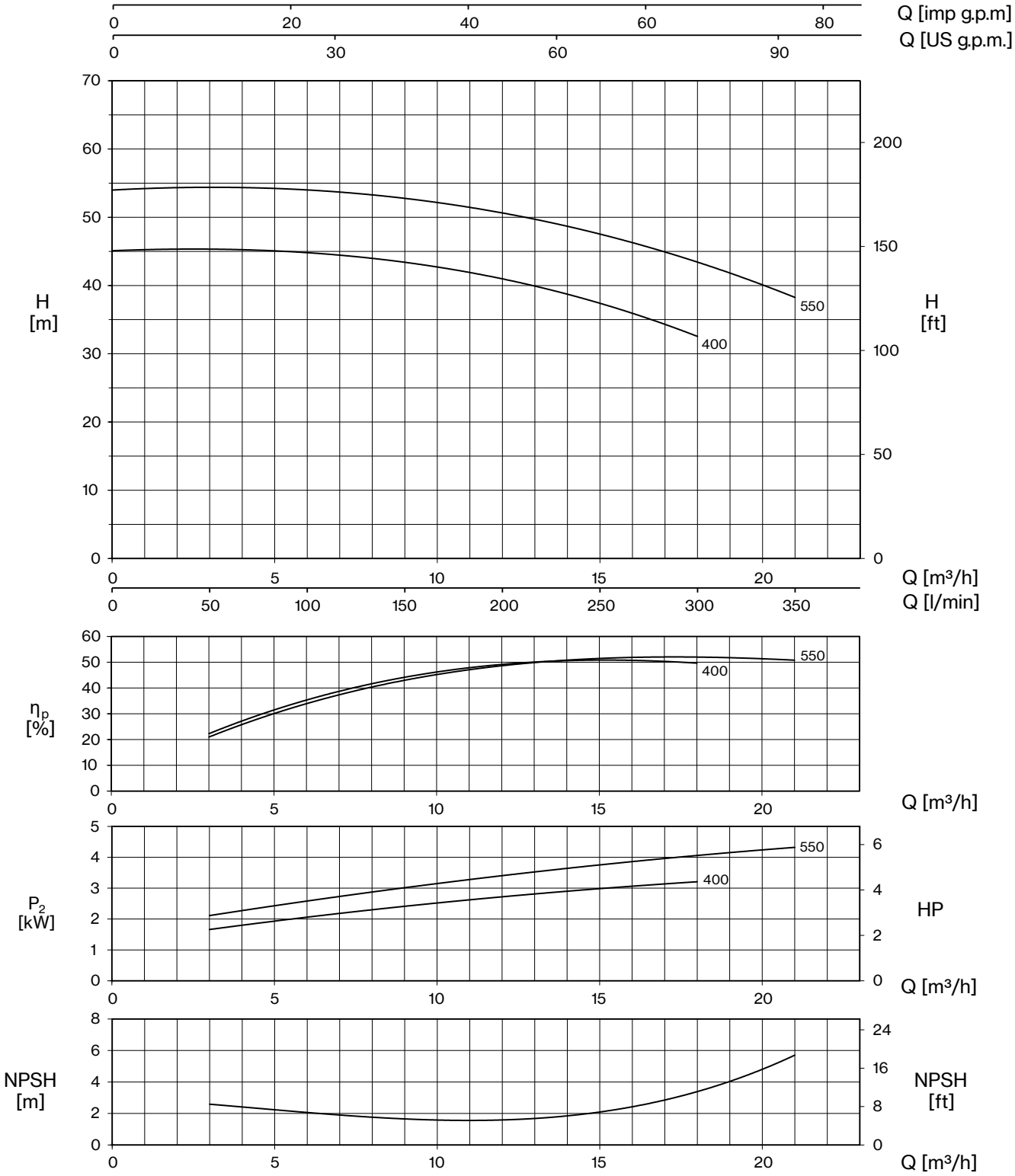


| TYPE - 50 Hz | | P2 | | P1 | | CURRENT | | Q (m³/h - l/min) | | | | | | | |
|---|---|---|---|---|---|---|---|---|---|---|---|---|---|---|---|
| 1~ | 3~ | | | 1~ | 3~ | 1~ 230V | 3~ 400V | 0 | 3 | 6 | 9 | 12 | 15 | 18 | 21 |
| | | | | | | | | 0 | 50 | 100 | 150 | 200 | 250 | 300 | 350 |
| | | HP | kW | kW | | A | | H (m) | | | | | | | |
| **CM 400** | **CMT 400** | 4 | 3 | 3,6 | 3,7 | 16,0 | 6,7 | 45,1 | 45,2 | 44,9 | 43,4 | 40,9 | 37,4 | 32,5 | |
| **-** | **CMT 550** | 5,5 | 4 | - | 4,9 | - | 9,0 | 54,1 | 54,1 | 54,0 | 52,9 | 50,7 | 47,5 | 43,2 | 38,4 |

# CM

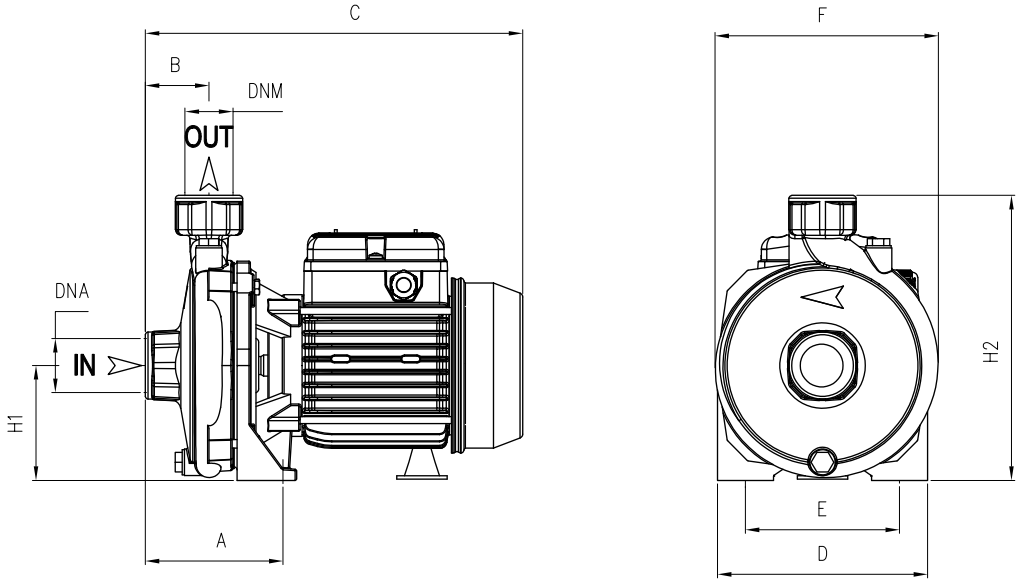


| TYPE | | DIMENSIONS (mm) | | | | | | | | | | | | | | |
|---|---|---|---|---|---|---|---|---|---|---|---|---|---|---|---|---|
| ~1 | ~3 | A | B | C | D | E | F | H1 | H2 | DNA | DNM | I | L | M | ~1 | ~3 |
| **CM 45** | **CMT 45** | 95 | 45,5 | 265 | 150 | 110 | 160 | 82 | 202 | 1" G | 1" G | 290 | 175 | 225 | 8,5 | 8,5 |
| **CM 50** | **CMT 50** | 95 | 45,5 | 265 | 150 | 110 | 160 | 82 | 202 | | | 290 | 170 | 230 | 9,5 | 9,5 |
| **CM 75** | **CMT 75** | 110 | 46,5 | 300 | 180 | 140 | 185 | 97 | 234 | 1" G | 1" G | 325 | 200 | 265 | 13,5 | 13 |
| **CM 100 V** | **-** | 110 | 46,5 | 300 | 180 | 140 | 185 | 97 | 234 | | | 325 | 200 | 265 | 14 | - |
| **CM 100** | **CMT 100** | 110 | 46,5 | 300 | 180 | 140 | 185 | 97 | 234 | | | 325 | 200 | 265 | 15 | 14,5 |
| **CM 164** | **CMT 164** | 117 | 46,5 | 378 | 220 | 180 | 225 | 115 | 285 | 1" ¼ G | 1" G | 420 | 230 | 309 | 25,5 | 26,5 |
| **CM 214** | **CMT 214** | 117 | 46,5 | 378 | 220 | 180 | 225 | 115 | 285 | | | 420 | 230 | 309 | 26,5 | 25,5 |
| **CM 314** | **-** | 117 | 46,5 | 446 | 220 | 180 | 225 | 115 | 285 | | | 520 | 235 | 320 | 34,5 | - |
| **-** | **CMT 314** | 117 | 46,5 | 378 | 220 | 180 | 225 | 115 | 285 | | | 420 | 230 | 309 | - | 27 |
| **CM 400** | **CMT 400** | 108 | 54 | 460 | 240 | 190 | 250 | 133 | 323 | 2" G | 1" ¼ G | 480 | 255 | 342 | 46 | 41,5 |
| **-** | **CMT 550** | 108 | 54 | 460 | 240 | 190 | 250 | 133 | 323 | | | 480 | 255 | 342 | - | 45,5 |

# MB

## Threaded Centrifugal

Two impeller compact centrifugal pumps for constructing pressurisation systems for civil and industrial plant: guarantee good ratio between pressure and flow rate.

| Construction features | |
|---|---|
| **Pump body** | cast iron |
| **Motor bracket** | cast iron |
| **Impeller** | Noryl® or brass |
| **Mechanical seal** | ceramic-graphite-NBR |
| **Motor shaft** | stainless steel AISI 303 |
| **Liquid temperature** | 0 - 50 °C |
| **Operating pressure** | max 8 bar |

| Motor | |
|---|---|
| **2 poles induction motor** | 3~ 230/400V - 50Hz<br>1~ 230V - 50Hz<br>(with thermal protection) |
| **Insulation class** | F |
| **Protection degree** | IPX4 |

**MBT 150 / 01**

- impeller: **0** Noryl® / **1** brass
- motor bracket: **0** cast iron
- motor: (blank) 1~ / **T** 3~
- pump type

| LOTS | | | | |
|---|---|---|---|---|
| TYPE | TRUCK | | CONTAINER | |
| | PALLET (cm) | N° pumps | PALLET (cm) | N° pumps |
| **MB(T) 130÷200** | 85×110×160 | 35 | 85×110×190 | 42 |
| **MB 300** | 80×120×145 | 24 | 80×120×175 | 30 |
| **MBT 300** | 85×110×160 | 35 | 85×110×190 | 42 |

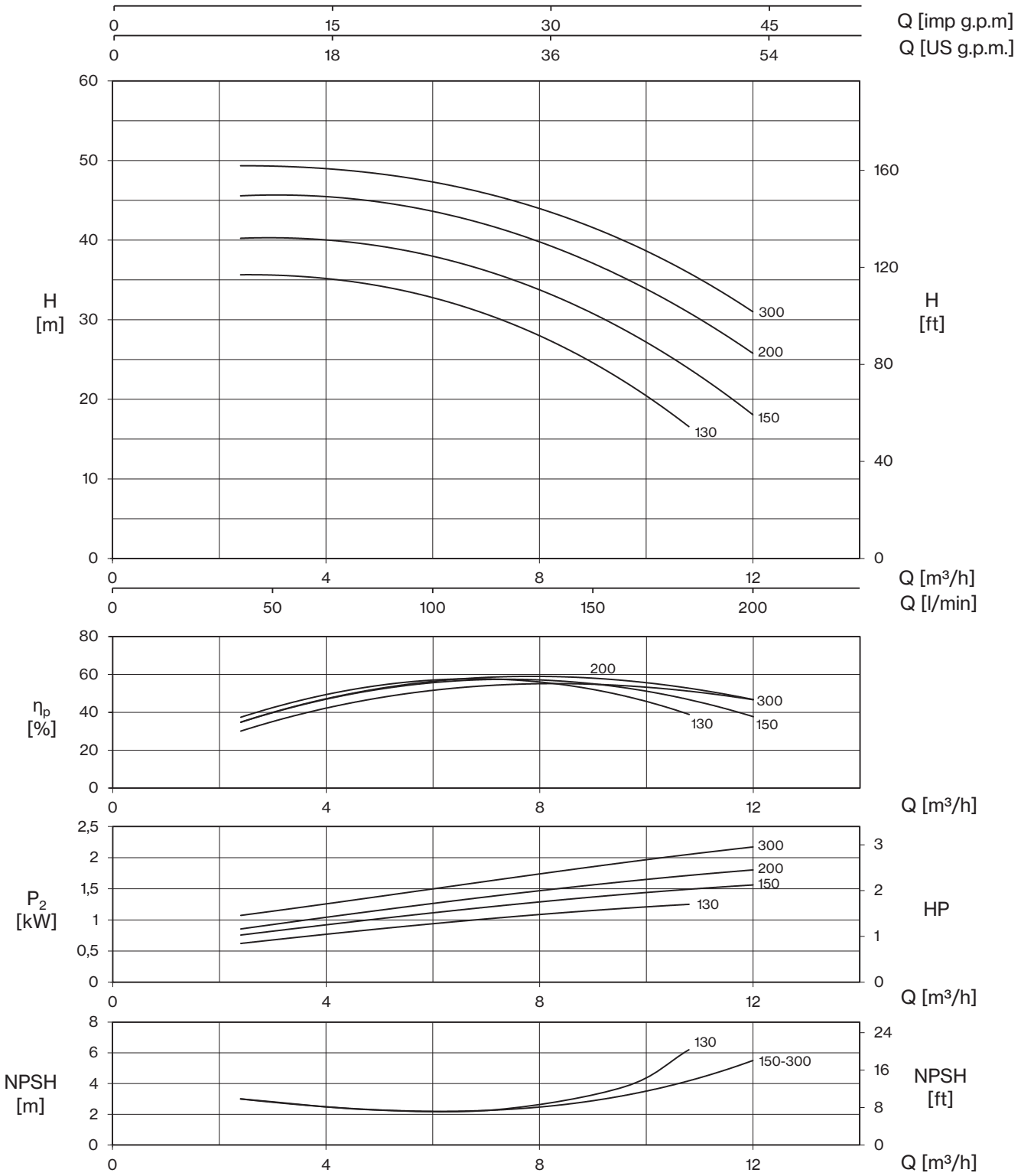


| TYPE - 50 Hz | | P2 | | P1 | | CURRENT | | Q (m³/h - l/min) | | | | | | |
|---|---|---|---|---|---|---|---|---|---|---|---|---|---|---|
| 1~ | 3~ | | | 1~ | 3~ | 1~ 230V | 3~ 400V | 0 | 2,4 | 4,8 | 7,2 | 9,6 | 10,8 | 12 |
| | | | | | | | | 0 | 40 | 80 | 120 | 160 | 180 | 200 |
| | | HP | kW | kW | | A | | H (m) | | | | | | |
| **MB 130** | **-** | 1,8 | 1,3 | 1,6 | - | 7,4 | - | 35,1 | 35,6 | 34,5 | 30,2 | 22,2 | 16,6 | |
| **MB 150** | **MBT 150** | 2 | 1,5 | 2,0 | 1,9 | 8,9 | 3,7 | 39,2 | 40,2 | 39,5 | 35,7 | 28,7 | 23,9 | 18,0 |
| **MB 200** | **MBT 200** | 2,5 | 1,85 | 2,3 | 2,2 | 10,4 | 4,4 | 44,9 | 45,6 | 44,8 | 41,7 | 35,2 | 30,8 | 25,8 |
| **MB 300** | **MBT 300** | 3 | 2,2 | 2,6 | 2,5 | 12,4 | 5,1 | 49,5 | 49,4 | 48,3 | 45,8 | 39,8 | 35,8 | 31,1 |

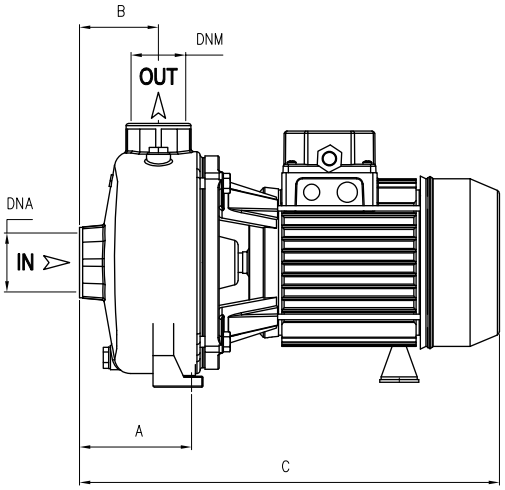


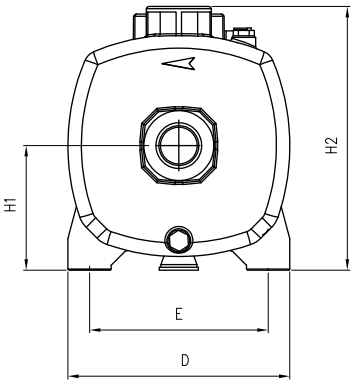


| TYPE | | DIMENSIONS (mm) | | | | | | | | | | | | | |
|---|---|---|---|---|---|---|---|---|---|---|---|---|---|---|---|
| ~1 | ~3 | A | B | C | D | E | H1 | H2 | DNA | DNM | I | L | M | ~1 | ~3 |
| **MB 130** | **-** | 108 | 73 | 415 | 205 | 165 | 115 | 242 | 1" ½ G | 1" ¼ G | 433 | 220 | 287 | 23,5 | - |
| **MB 150** | **MBT 150** | 108 | 73 | 415 | 205 | 165 | 115 | 242 | | | 433 | 220 | 287 | 24 | 25 |
| **MB 200** | **MBT 200** | 108 | 73 | 415 | 205 | 165 | 115 | 242 | | | 433 | 220 | 287 | 25,5 | 25 |
| **MB 300** | **-** | 108 | 73 | 485 | 205 | 165 | 115 | 242 | | | 520 | 235 | 320 | 34 | - |
| **-** | **MBT 300** | 108 | 73 | 415 | 205 | 165 | 115 | 242 | | | 433 | 220 | 287 | - | 26,5 |

# CB

## Threaded Centrifugal

Twin-impeller centrifugal pumps for pressurisation systems in civil and industrial applications; the dual impellers ensure high head and flow rate.

### Construction features

| | |
|---|---|
| **Pump body** | cast iron |
| **Motor bracket** | cast iron |
| **Impeller** | Noryl® or brass (100÷900)<br>brass (800÷1500) |
| **Mechanical seal** | ceramic-graphite-NBR |
| **Motor shaft** | stainless steel AISI 303<br>stainless steel AISI 416 (100) |
| **Liquid temperature** | Noryl® impeller: 0 - 50 °C<br>brass impeller: 0 - 90 °C |
| **Operating pressure** | max 6 bar (100)<br>max 11 bar (160÷1500) |

**CBT 100 / 00**

- impeller: **0** Noryl®; **1** brass; (800, 1000÷1500) brass
- motor bracket: **0** cast iron; (800, 1000÷1500) cast iron
- motor: (blank) 1~; **T** 3~
- pump type

### Motor

| | |
|---|---|
| **2 poles induction motor** | 3~ 230/400V - 50Hz P ⩽ 4kW<br>3~ 400/690V - 50Hz P > 4kW<br><br>1~ 230V - 50Hz<br>(with thermal protection up to MEC 80) |
| **Insulation class** | F |
| **Protection degree** | IPX4<br>IPX5 (800÷1500) |

| LOTS | | | | |
|---|---|---|---|---|
| TYPE | TRUCK | | CONTAINER | |
| | PALLET (cm) | N° pumps | PALLET (cm) | N° pumps |
| **CB(T) 100** | 90×110×145 | 65 | 90×110×195 | 91 |
| **CB(T) 160÷210** | 85×110×160 | 35 | 85×110×190 | 42 |
| **CB 310** | 85×110×150 | 24 | 85×110×180 | 30 |
| **CBT 310** | 85×110×160 | 35 | 85×110×190 | 42 |
| **CB(T) 400÷900** | 85×120×150 | 24 | 85×120×180 | 30 |
| **CBT 800÷1500** | 100×120×140 | 18 | 100×120×185 | 24 |

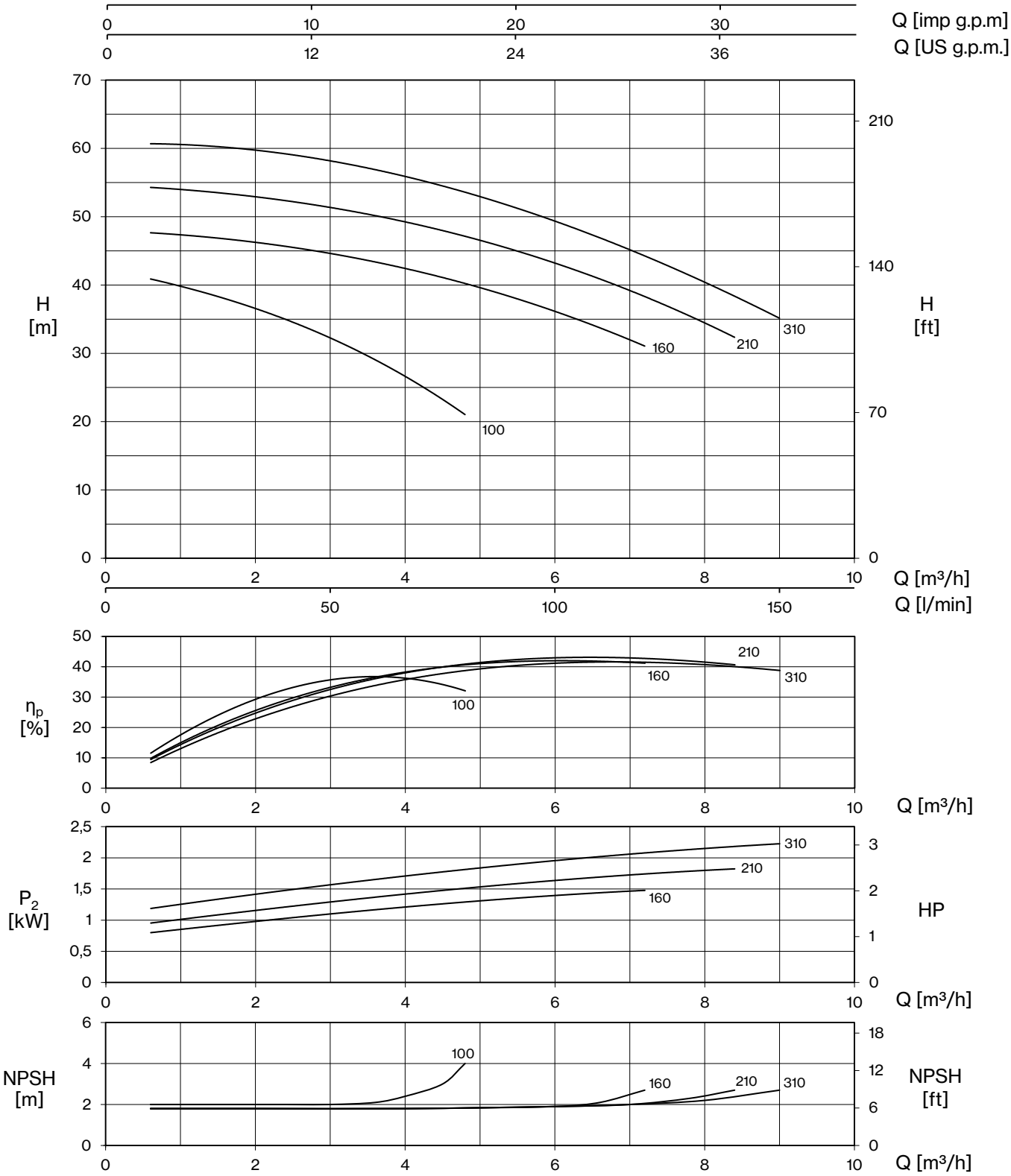


| TYPE - 50 Hz | | P2 | | P1 | | CURRENT | | Q (m³/h - l/min) | | | | | | | | | | |
|---|---|---|---|---|---|---|---|---|---|---|---|---|---|---|---|---|---|---|
| 1~ | 3~ | | | 1~ | 3~ | 1~ 230V | 3~ 400V | 0 | 0,6 | 1,2 | 1,8 | 2,4 | 3,6 | 4,8 | 6 | 7,2 | 8,4 | 9 |
| | | | | | | | | 0 | 10 | 20 | 30 | 40 | 60 | 80 | 100 | 120 | 140 | 150 |
| | | HP | kW | kW | | A | | H (m) | | | | | | | | | | |
| **CB 100** | **CBT 100** | 1 | 0,74 | 1,17 | 1,15 | 5,4 | 2,4 | 42,0 | 40,8 | 39,4 | 37,4 | 34,7 | 29,2 | 21,0 | | | | |
| **CB 160** | **CBT 160** | 2 | 1,5 | 1,9 | 1,8 | 8,5 | 3,7 | 48,3 | 47,7 | 47,1 | 46,5 | 45,7 | 43,5 | 40,1 | 36,2 | 31,1 | | |
| **CB 210** | **CBT 210** | 2,5 | 1,85 | 2,3 | 2,2 | 10,4 | 4,4 | 54,9 | 54,4 | 53,8 | 53,0 | 52,3 | 50,5 | 47,1 | 43,1 | 38,3 | 32,4 | |
| **CB 310** | **CBT 310** | 3 | 2,2 | 2,8 | 2,6 | 13,0 | 5,2 | 61,4 | 60,9 | 60,3 | 59,8 | 59,2 | 57,1 | 53,6 | 49,3 | 44,2 | 38,3 | 35,2 |

# CB

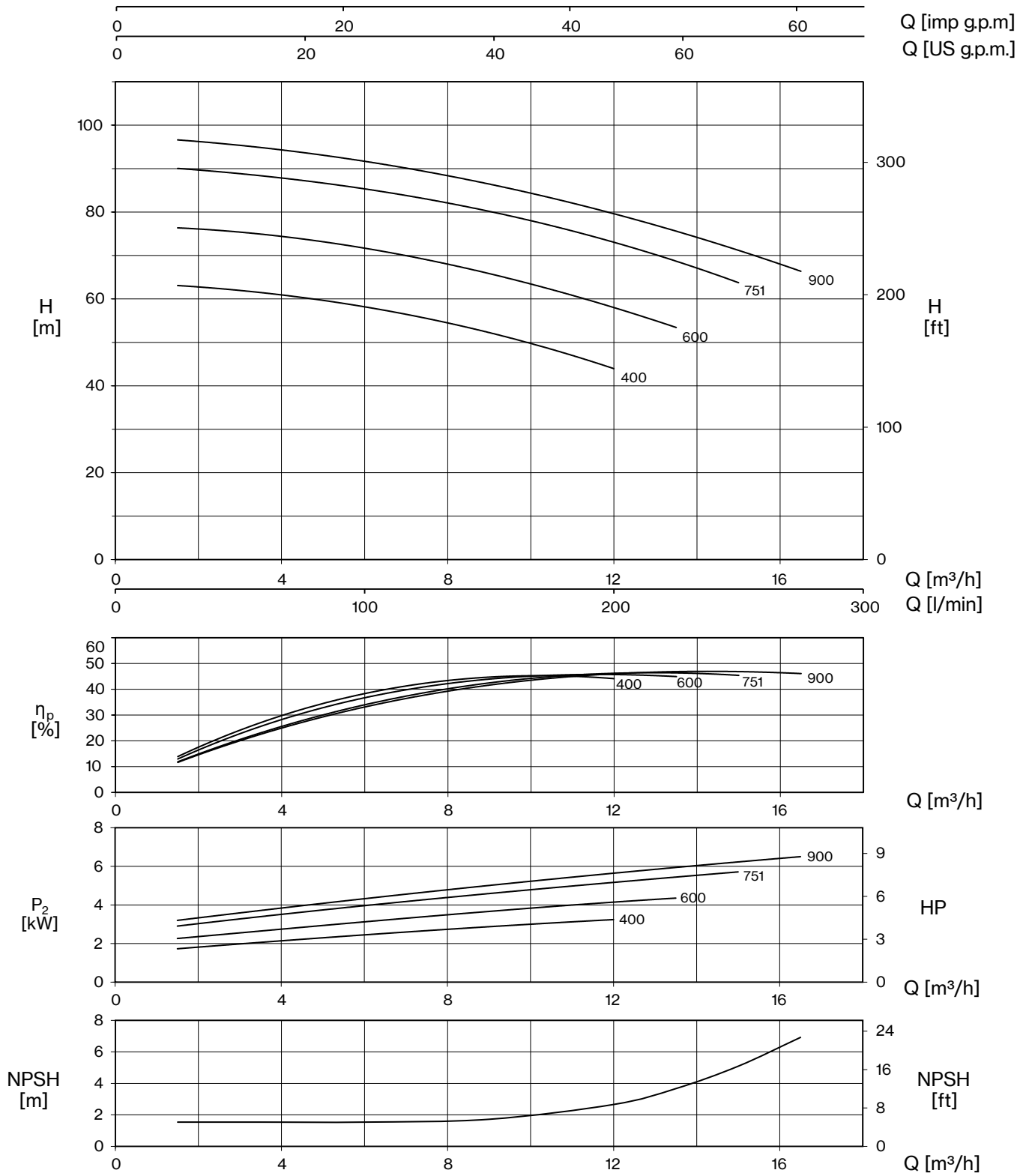


| TYPE - 50 Hz | | P2 | | P1 | | CURRENT | | Q (m³/h - l/min) | | | | | | | | | | | |
|---|---|---|---|---|---|---|---|---|---|---|---|---|---|---|---|---|---|---|---|
| 1~ | 3~ | | | 1~ | 3~ | 1~ 230V | 3~ 400V | 0 | 1,5 | 3,0 | 4,5 | 6,0 | 7,5 | 9,0 | 10,5 | 12 | 13,5 | 15,0 | 16,5 |
| | | | | | | | | 0 | 25 | 50 | 75 | 100 | 125 | 150 | 175 | 200 | 225 | 250 | 275 |
| | | HP | kW | kW | | A | | H (m) | | | | | | | | | | | |
| **CB 400** | **CBT 400** | 4 | 3,0 | 3,7 | 3,8 | 16,4 | 6,7 | 63,6 | 63,1 | 62,0 | 60,3 | 58,2 | 55,5 | 52,3 | 48,4 | 43,9 | | | |
| **CB 600** | **CBT 600** | 5,5 | 4,0 | 5,2 | 5,0 | 23,3 | 9,1 | 76,9 | 76,4 | 75,4 | 73,8 | 71,7 | 69,0 | 65,9 | 62,1 | 58,0 | 53,4 | | |
| **-** | **CBT 751** | 7,5 | 5,5 | - | 6,5 | - | 11,5 | 90,7 | 90,0 | 88,9 | 87,3 | 85,3 | 82,9 | 80,1 | 76,8 | 73,1 | 68,8 | 63,7 | |
| **-** | **CBT 900** | 10 | 7,5 | - | 7,3 | - | 13,3 | 97,5 | 96,6 | 95,4 | 93,7 | 91,7 | 89,2 | 86,5 | 83,3 | 79,8 | 75,2 | 71,2 | 66,4 |

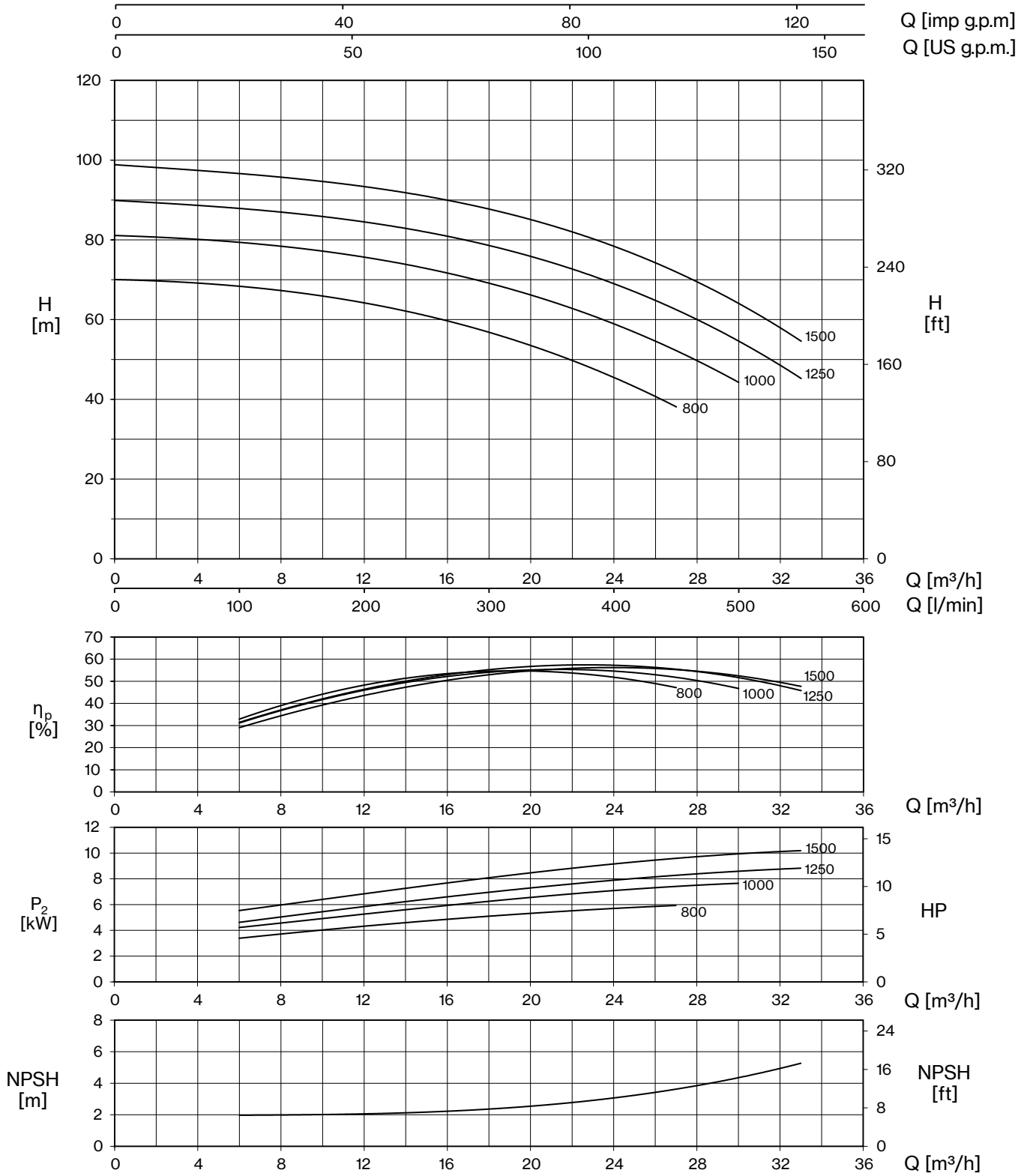


| TYPE - 50 Hz | P2 | | P1 | CURRENT | Q (m³/h - l/min) | | | | | | | |
|---|---|---|---|---|---|---|---|---|---|---|---|---|
| 3~ | | | | 3~ 400V | 0 | 6 | 12 | 18 | 24 | 27 | 30 | 33 |
| | | | | | 0 | 100 | 200 | 300 | 400 | 450 | 500 | 550 |
| | HP | kW | kW | A | H (m) | | | | | | | |
| **CBT 800** | 7,5 | 5,5 | 6,7 | 11,1 | 70,0 | 68,5 | 63,9 | 57,1 | 45,3 | 38,2 | | |
| **CBT 1000** | 10 | 7,5 | 8,5 | 13,9 | 80,7 | 80,4 | 75,0 | 68,5 | 59,7 | 52,6 | 43,7 | |
| **CBT 1250** | 12,5 | 9,2 | 9,8 | 16,3 | 89,5 | 88,8 | 84,1 | 77,7 | 69,7 | 63,0 | 54,2 | 45,1 |
| **CBT 1500** | 15 | 11,0 | 11,2 | 18,6 | 98,3 | 97,8 | 93,5 | 85,7 | 78,9 | 73,3 | 64,0 | 54,0 |

# CB

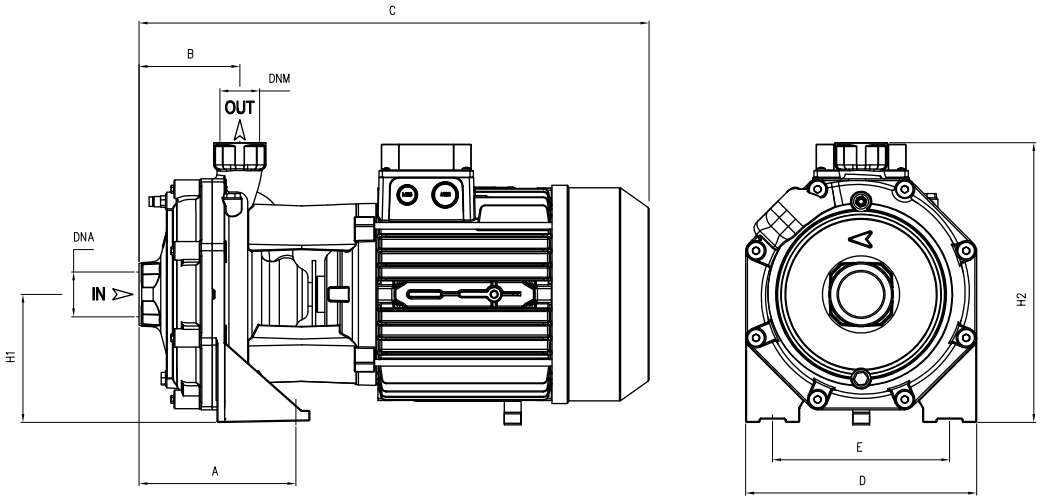


| TYPE | | DIMENSIONS (mm) | | | | | | | | | | | | | |
|---|---|---|---|---|---|---|---|---|---|---|---|---|---|---|---|
| ~1 | ~3 | A | B | C | D | E | H1 | H2 | DNA | DNM | I | L | M | ~1 | ~3 |
| **CB 100** | **CBT 100** | 122 | 72 | 328 | 180 | 140 | 98 | 228 | 1” G | 1” G | 350 | 195 | 265 | 15,5 | 15 |
| **CB 160** | **CBT 160** | 115 | 82 | 408 | 210 | 170 | 110 | 265 | 1” ¼ G | | 433 | 220 | 287 | 25,5 | 26,5 |
| **CB 210** | **CBT 210** | 115 | 82 | 408 | 210 | 170 | 110 | 265 | | | 433 | 220 | 287 | 26 | 27 |
| **CB 310** | **-** | 115 | 82 | 477 | 210 | 170 | 110 | 265 | | | 520 | 235 | 320 | 35,5 | - |
| **-** | **CBT 310** | 115 | 82 | 408 | 210 | 170 | 110 | 265 | | | 433 | 220 | 287 | - | 27,5 |
| **CB 400** | **CBT 400** | 145 | 95,5 | 498 | 266 | 212 | 135 | 305 | 1” ½ G | 1” ¼ G | 553 | 274 | 318 | 48 | 44 |
| **CB 600** | **CBT 600** | 145 | 95,5 | 498 | 266 | 212 | 135 | 305 | | | 553 | 274 | 318 | 56,5 | 48 |
| **-** | **CBT 751** | 145 | 95,5 | 532 | 266 | 212 | 135 | 305 | | | 553 | 274 | 318 | - | 56 |
| **-** | **CBT 900** | 145 | 95,5 | 532 | 266 | 212 | 135 | 305 | | | 553 | 274 | 318 | - | 62 |
| **-** | **CBT 800** | 190 | 120 | 605 | 275 | 210 | 150 | 330 | 2” G | 1” ¼ G | 675 | 390 | 300 | - | 78 |
| **-** | **CBT 1000** | 190 | 120 | 605 | 275 | 210 | 150 | 330 | | | 675 | 390 | 300 | - | 84 |
| **-** | **CBT 1250** | 190 | 120 | 645 | 275 | 210 | 150 | 330 | | | 675 | 390 | 300 | - | 91,5 |
| **-** | **CBT 1500** | 190 | 120 | 645 | 275 | 210 | 150 | 330 | | | 675 | 390 | 300 | - | 95,5 |

# CR

## Threaded Centrifugal

Medium delivery centrifugal pumps for agricultural applications. Equipped with an open impeller that allows the pumping of non-clean liquids, guaranteeing the free passage of small solids (Ø max. 10 mm).

### Construction features

| | |
|---|---|
| **Pump body** | cast iron |
| **Motor bracket** | cast iron |
| **Impeller** | Noryl® or brass |
| **Mechanical seal** | ceramic-graphite-NBR |
| **Motor shaft** | stainless steel AISI 416 |
| **Liquid temperature** | Noryl® impeller: 0 - 50 °C<br>brass impeller: 0 - 90 °C |
| **Operating pressure** | max 6 bar |

### Motor

| | |
|---|---|
| **2 poles induction motor** | 3~ 230/400V - 50Hz<br>1~ 230V - 50Hz<br>(with thermal protection) |
| **Insulation class** | F |
| **Protection degree** | IPX4 |

**CRT 102 / 01**

- impeller: **0** Noryl® / **1** brass
- motor bracket: **0** cast iron
- motor: (blank) 1~ / **T** 3~
- pump type

| LOTS | | | | |
|---|---|---|---|---|
| TYPE | TRUCK | | CONTAINER | |
| | PALLET (cm) | N° pumps | PALLET (cm) | N° pumps |
| **CR(T)** | 85×110×145 | 65 | 85×110×195 | 91 |

# CR

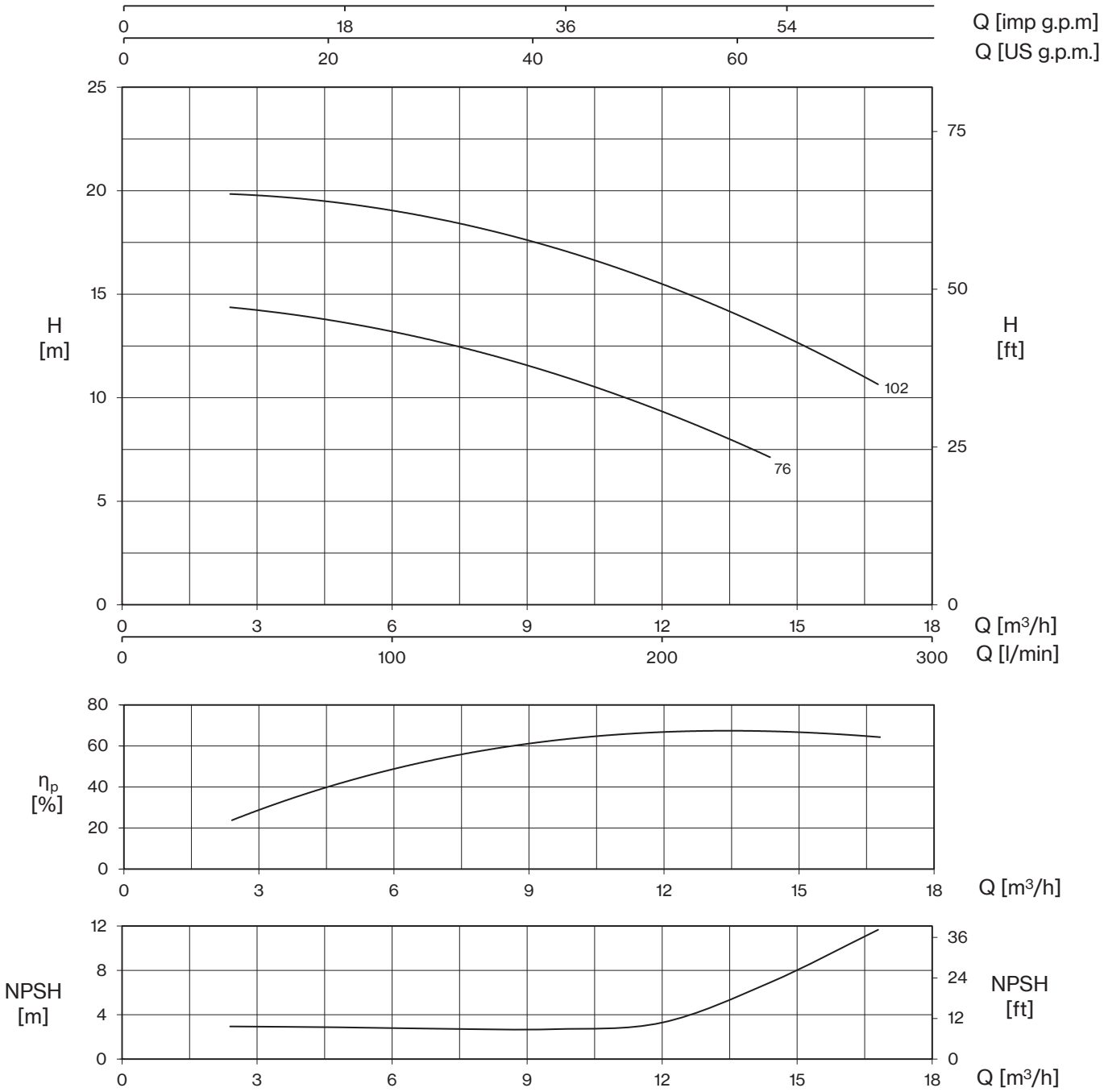


| TYPE - 50 Hz | | P2 | | P1 | | CURRENT | | Q (m³/h - l/min) | | | | | | |
|---|---|---|---|---|---|---|---|---|---|---|---|---|---|---|
| 1~ | 3~ | | | 1~ | 3~ | 1~ 230V | 3~ 400V | 0 | 3 | 6 | 9 | 12 | 14,4 | 16,8 |
| | | | | | | | | 0 | 50 | 100 | 150 | 200 | 240 | 280 |
| | | HP | kW | kW | | A | | H (m) | | | | | | |
| **CR 76** | **CRT 76** | 0,8 | 0,59 | 0,73 | 0,83 | 3,4 | 1,5 | 15,0 | 14,3 | 13,0 | 11,6 | 9,5 | 7,0 | |
| **CR 102** | **CRT 102** | 1 | 0,74 | 1,14 | 1,2 | 5,3 | 2,4 | 20,5 | 19,8 | 18,9 | 17,7 | 15,5 | 13,5 | 10,5 |

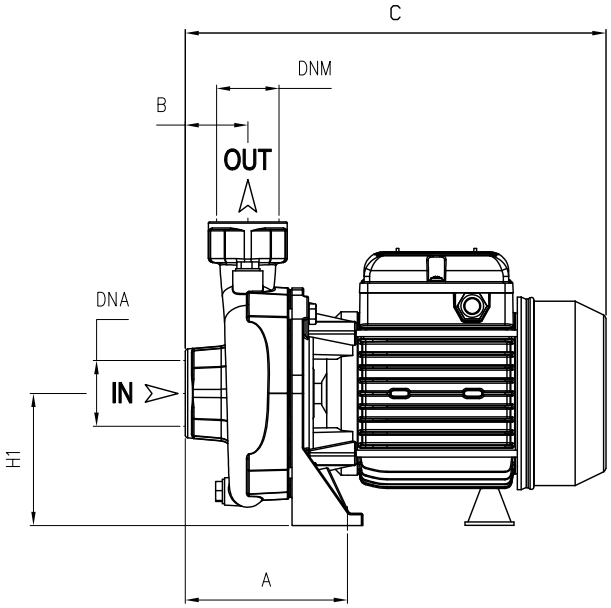


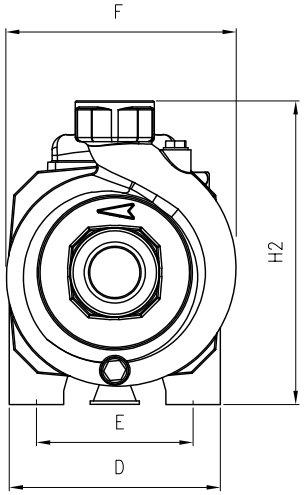


| TYPE | | DIMENSIONS (mm) | | | | | | | | | | | | | | |
|---|---|---|---|---|---|---|---|---|---|---|---|---|---|---|---|---|
| -1 | -3 | A | B | C | D | E | F | H1 | H2 | DNA | DNM | I | L | M | 1~ | 3~ |
| **CR 76** | **CRT 76** | 120 | 45 | 308 | 155 | 115 | 170 | 97 | 222 | 1" ½ G | 1" ½ G | 325 | 200 | 265 | 13,1 | 12,5 |
| **CR 102** | **CRT 102** | 120 | 45 | 308 | 155 | 115 | 170 | 97 | 222 | | | 325 | 200 | 265 | 14,5 | 13,7 |

# CS

## Threaded Centrifugal

Single-impeller, medium to high-flow rate centrifugal pumps with 2”, 3” and 4” delivery openings. Mainly used in agriculture for flood and sprinkler irrigation, and water withdrawal from reservoirs or canals.

### Construction features

| | |
|---|---|
| **Pump body** | cast iron |
| **Motor bracket** | cast iron |
| **Impeller** | cast iron or brass (CSB) |
| **Mechanical seal** | ceramic-graphite-NBR |
| **Motor shaft** | stainless steel AISI 303<br>stainless steel AISI 416<br>(75÷120) |
| **Liquid temperature** | 0 - 90 °C |
| **Operating pressure** | max 6 bar |

### Motor

| | |
|---|---|
| **2 poles induction motor** | 3~ 230/400V - 50Hz P ⩽ 4kW<br>3~ 400/690V - 50Hz P > 4kW<br><br>1~ 230V - 50Hz<br>(with thermal protection up to MEC 80) |
| **Insulation class** | F |
| **Protection degree** | IPX4 |

**CS T 150 / 2**

- 2” inlet/outlet ports
- motor: 1~ / **T** 3~
- impeller: cast iron / **B** brass (150)
- pump type

| LOTS | | | | |
|---|---|---|---|---|
| TYPE | TRUCK | | CONTAINER | |
| | PALLET (cm) | N° pumps | PALLET (cm) | N° pumps |
| **CS(T) 75/2÷120/2** | 90×110×145 | 65 | 90×110×195 | 91 |
| **CS(B)(T) 100/2÷250/2** | 85×110×170 | 40 | 85×110×200 | 48 |
| **CS(T) 200/3-300/3** | 85×110×150 | 30 | 85×110×180 | 60 |
| **CS(T) 400/3÷550/4** | 80×120×150 | 30 | 80×120×180 | 60 |
| **CST 750/4-1000/4** | 100×120×140 | 18 | 100×120×185 | 24 |

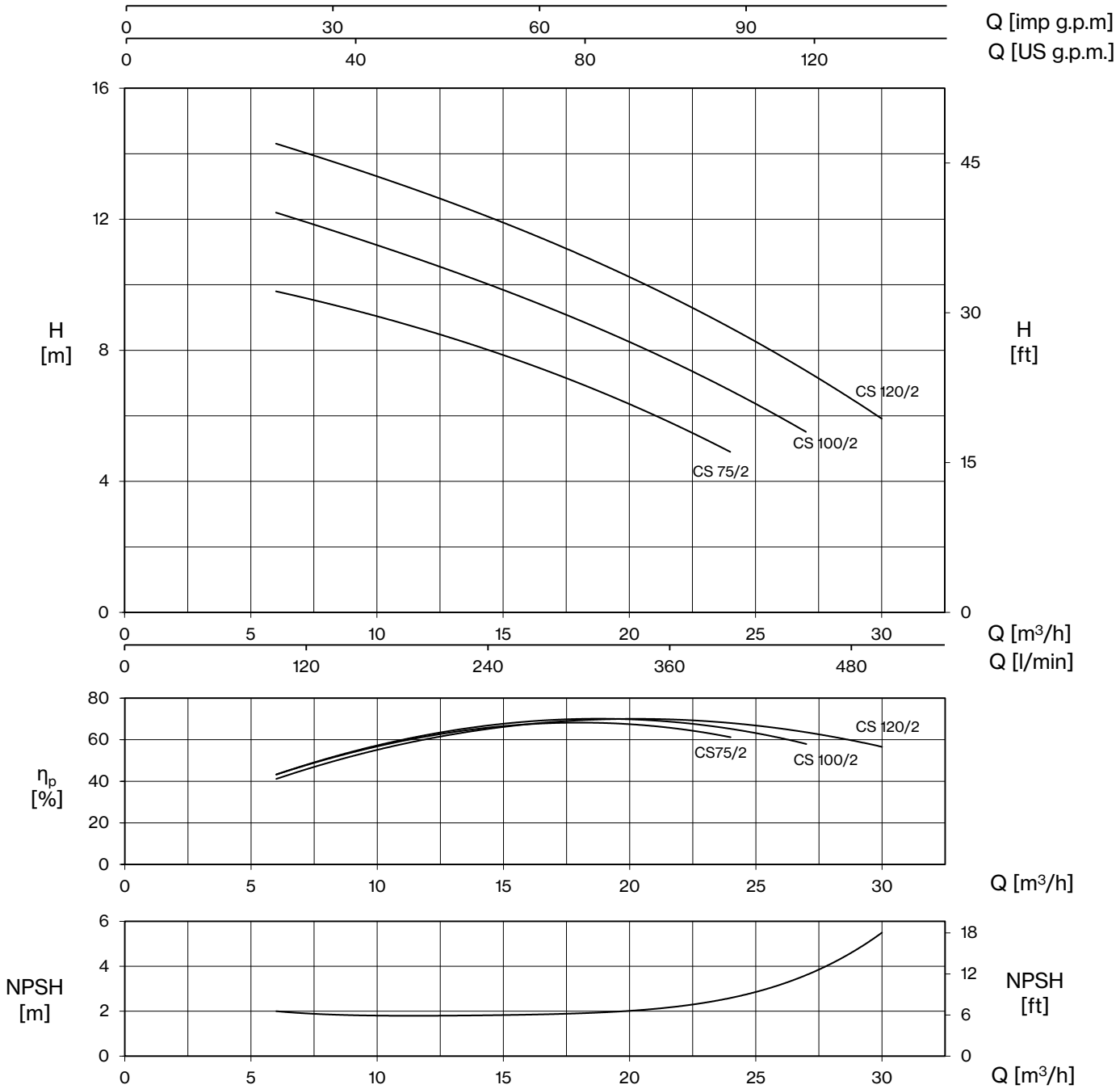


| TYPE - 50 Hz | | P2 | | P1 | | CURRENT | | Q (m³/h - l/min) | | | | | | |
|---|---|---|---|---|---|---|---|---|---|---|---|---|---|---|
| 1~ | 3~ | | | 1~ | 3~ | 1~ 230V | 3~ 400V | 0 | 6 | 12 | 18 | 24 | 27 | 30 |
| | | | | | | | | 0 | 100 | 200 | 300 | 400 | 450 | 500 |
| | | HP | kW | kW | | A | | H (m) | | | | | | |
| **CS 75/2** | **CST 75/2** | 0,8 | 0,59 | 0,8 | 0,7 | 3,5 | 1,3 | 10,1 | 9,8 | 8,6 | 7,0 | 4,9 | | |
| **CS 100/2** | **CST 100/2** | 1 | 0,74 | 1 | 0,85 | 4,5 | 1,6 | 12,8 | 12,2 | 10,7 | 8,9 | 6,8 | 5,5 | |
| **CS 120/2** | **CST 120/2** | 1,2 | 0,9 | 1,2 | 1,1 | 5,4 | 2,0 | 15,0 | 14,3 | 12,8 | 10,9 | 8,7 | 7,4 | 5,9 |

# CS

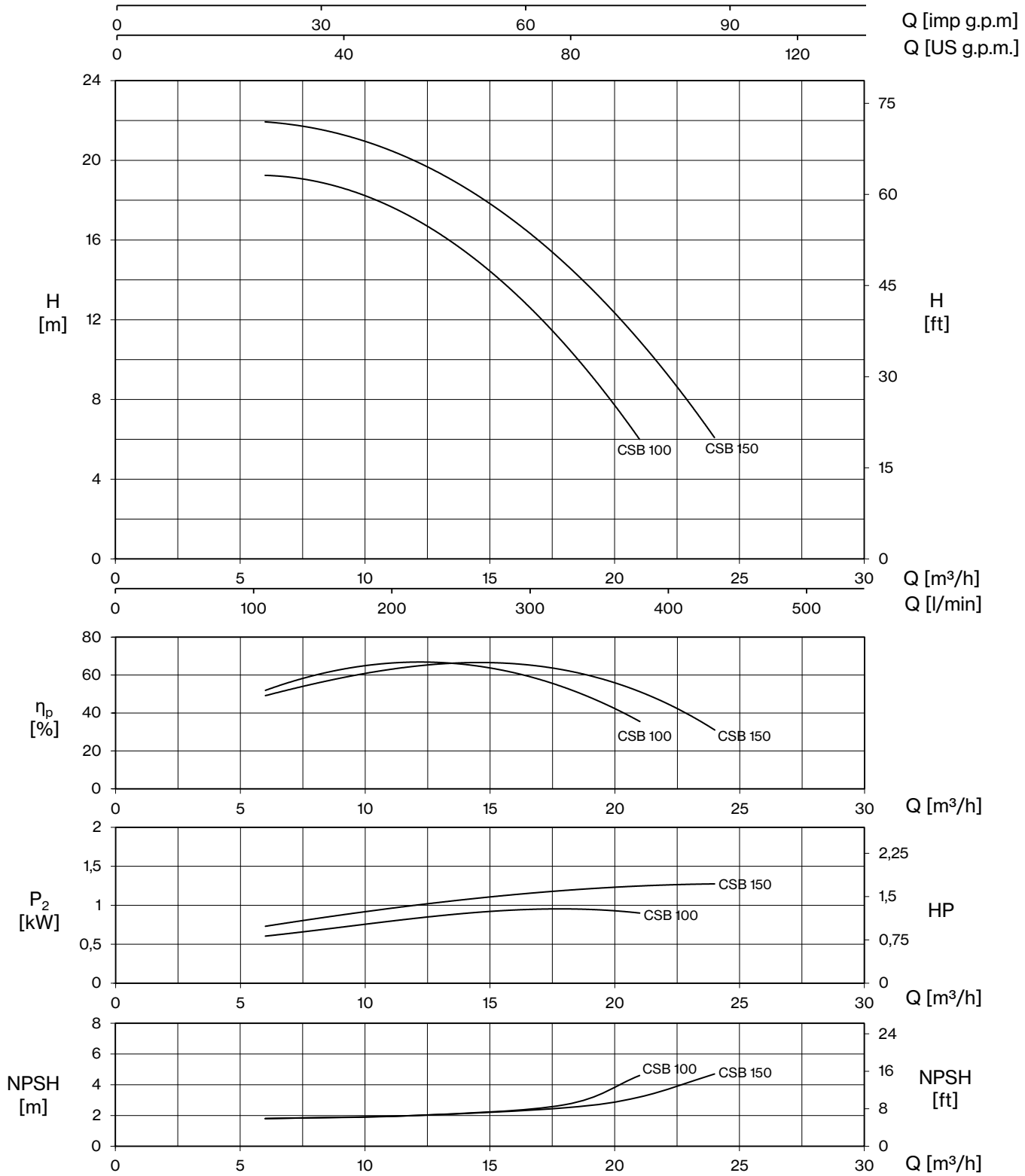


| TYPE - 50 Hz | | P2 | | P1 | | CURRENT | | Q (m³/h - l/min) | | | | | |
|---|---|---|---|---|---|---|---|---|---|---|---|---|---|
| 1~ | 3~ | | | 1~ | 3~ | 1~ 230V | 3~ 400V | 0 | 6 | 12 | 18 | 21 | 24 |
| | | | | | | | | 0 | 100 | 200 | 300 | 350 | 400 |
| | | HP | kW | kW | | A | | H (m) | | | | | |
| **CSB 100/2** | **-** | 1,5 | 1,1 | 1,3 | - | 6,1 | - | 18,8 | 19,2 | 17,1 | 10,8 | 6,0 | |
| **CSB 150/2** | **CSBT 150/2** | 1,8 | 1,3 | 1,6 | 1,5 | 7,4 | 3,5 | 21,6 | 21,9 | 19,9 | 15,0 | 10,8 | 6,1 |

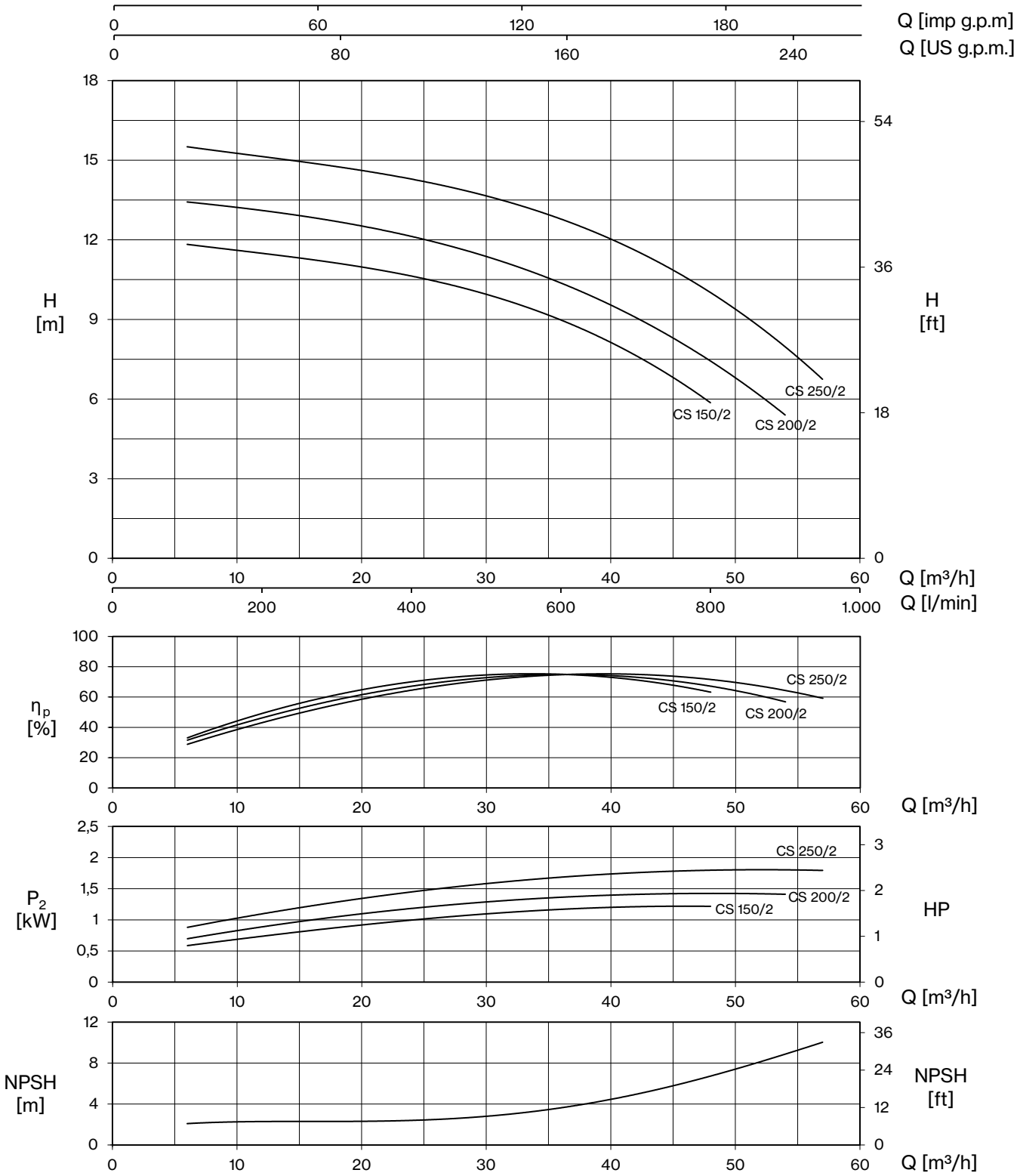


| TYPE - 50 Hz | | P2 | | P1 | | CURRENT | | Q (m³/h - l/min) | | | | | | | | | |
|---|---|---|---|---|---|---|---|---|---|---|---|---|---|---|---|---|---|
| 1~ | 3~ | | | 1~ | 3~ | 1~ 230V | 3~ 400V | 0 | 6 | 18 | 24 | 30 | 36 | 42 | 48 | 54 | 57 |
| | | | | | | | | 0 | 100 | 300 | 400 | 500 | 600 | 700 | 800 | 900 | 950 |
| | | HP | kW | kW | | A | | H (m) | | | | | | | | | |
| **CS 150/2** | **CST 150/2** | 1,8 | 1,3 | 1,5 | 1,4 | 7,1 | 3,4 | 11,9 | 11,8 | 11,1 | 10,6 | 10,0 | 8,9 | 7,6 | 5,9 | | |
| **CS 200/2** | **CST 200/2** | 2 | 1,5 | 1,7 | 1,7 | 8,0 | 3,6 | 13,5 | 13,4 | 12,6 | 12,1 | 11,4 | 10,4 | 9,1 | 7,3 | 5,4 | |
| **CS 250/2** | **CST 250/2** | 2,5 | 1,85 | 2,2 | 2,1 | 9,9 | 4,3 | 15,6 | 15,6 | 14,6 | 14,3 | 13,8 | 12,9 | 11,6 | 9,9 | 7,9 | 6,9 |

# CS

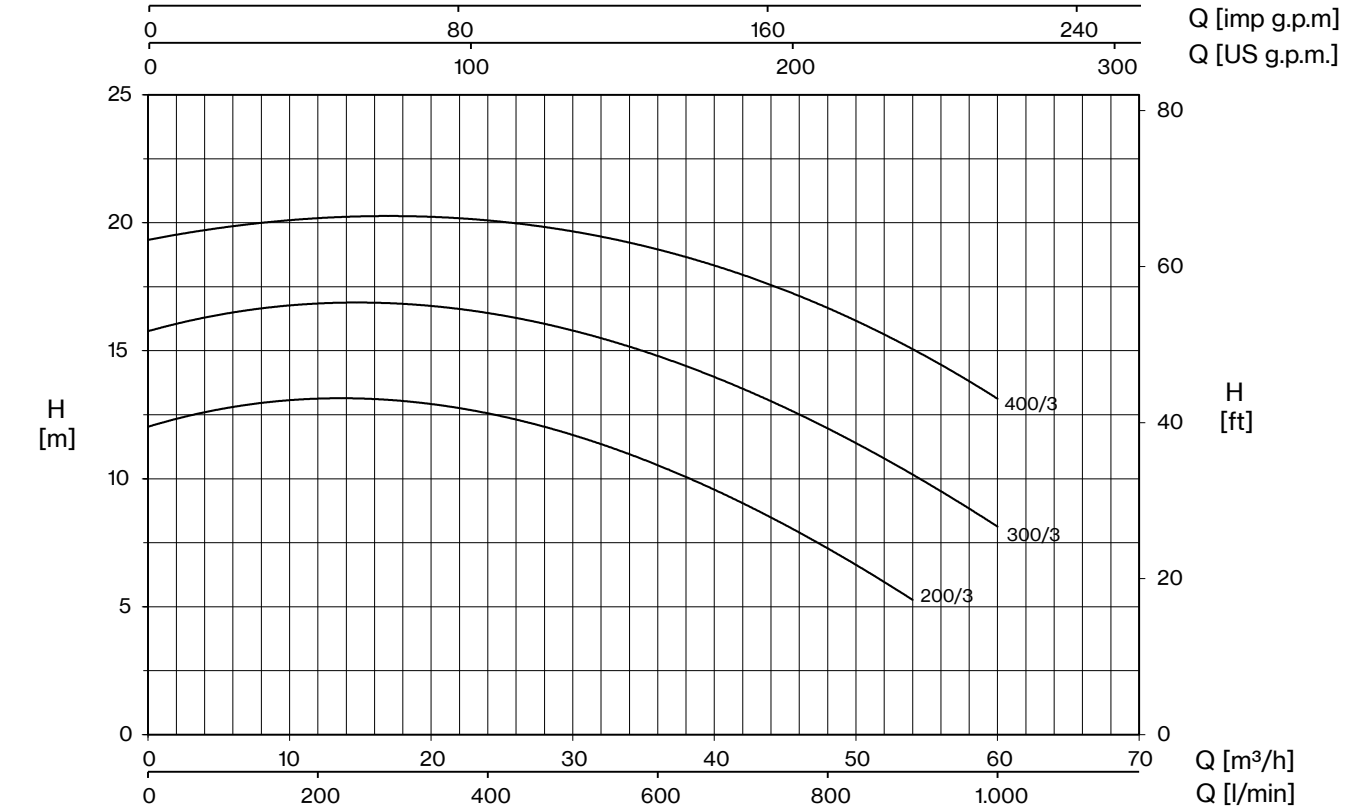


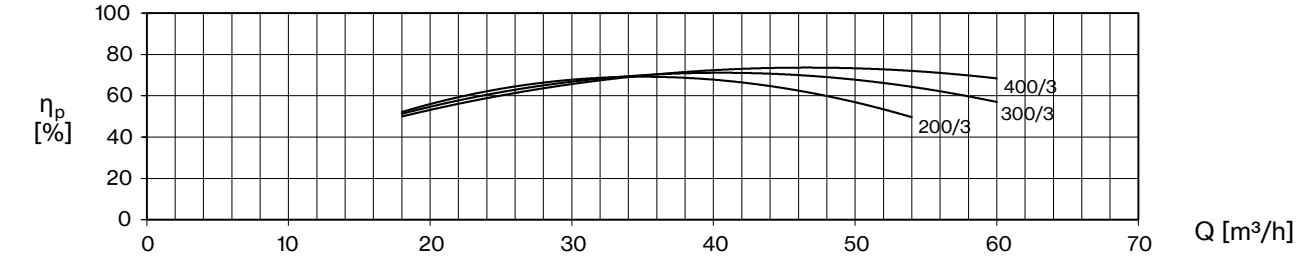


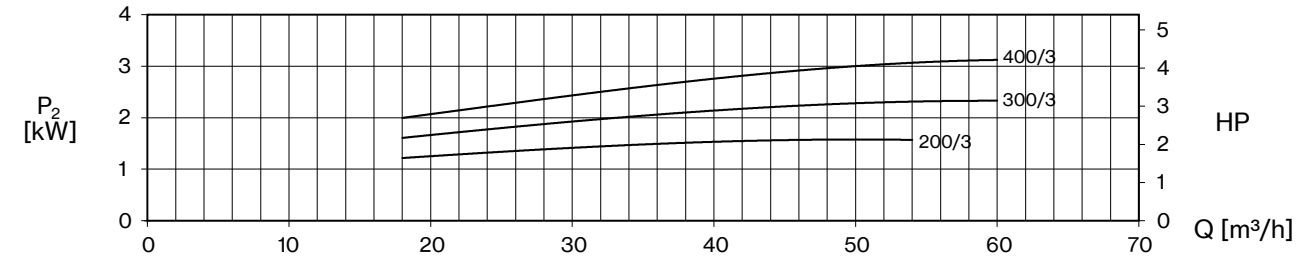


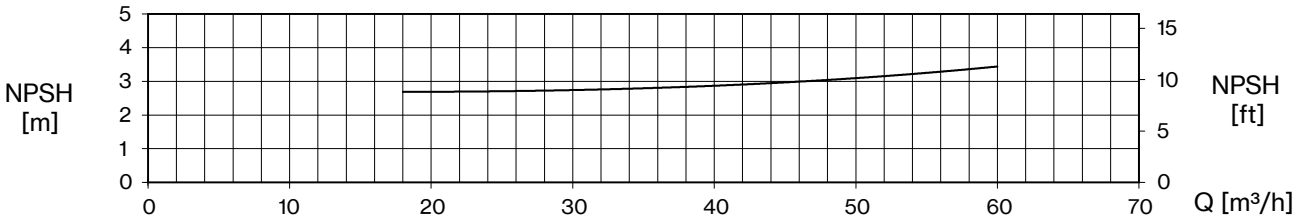


| TYPE - 50 Hz | | P2 | | P1 | | CURRENT | | Q (m³/h - l/min) | | | | | | | | |
|---|---|---|---|---|---|---|---|---|---|---|---|---|---|---|---|---|
| 1~ | 3~ | | | 1~ | 3~ | 1~ 230V | 3~ 400V | 0 | 18 | 24 | 30 | 36 | 42 | 48 | 54 | 60 |
| | | | | | | | | 0 | 300 | 400 | 500 | 600 | 700 | 800 | 900 | 1000 |
| | | HP | kW | kW | | A | | H (m) | | | | | | | | |
| **CS 200/3** | **CST 200/3** | 2 | 1,5 | 1,9 | 1,9 | 8,9 | 3,5 | 12,0 | 13,0 | 12,6 | 11,8 | 10,6 | 9,0 | 7,2 | 5,3 | |
| **CS 300/3** | **CST 300/3** | 3 | 2,2 | 2,7 | 2,7 | 12,4 | 5 | 15,8 | 16,8 | 16,5 | 15,7 | 14,7 | 13,6 | 12,0 | 10,1 | 8,2 |
| **-** | **CST 400/3** | 4 | 3 | - | 3,6 | - | 6,6 | 19,3 | 20,3 | 20,1 | 19,6 | 18,9 | 18,0 | 16,8 | 15,0 | 13,1 |

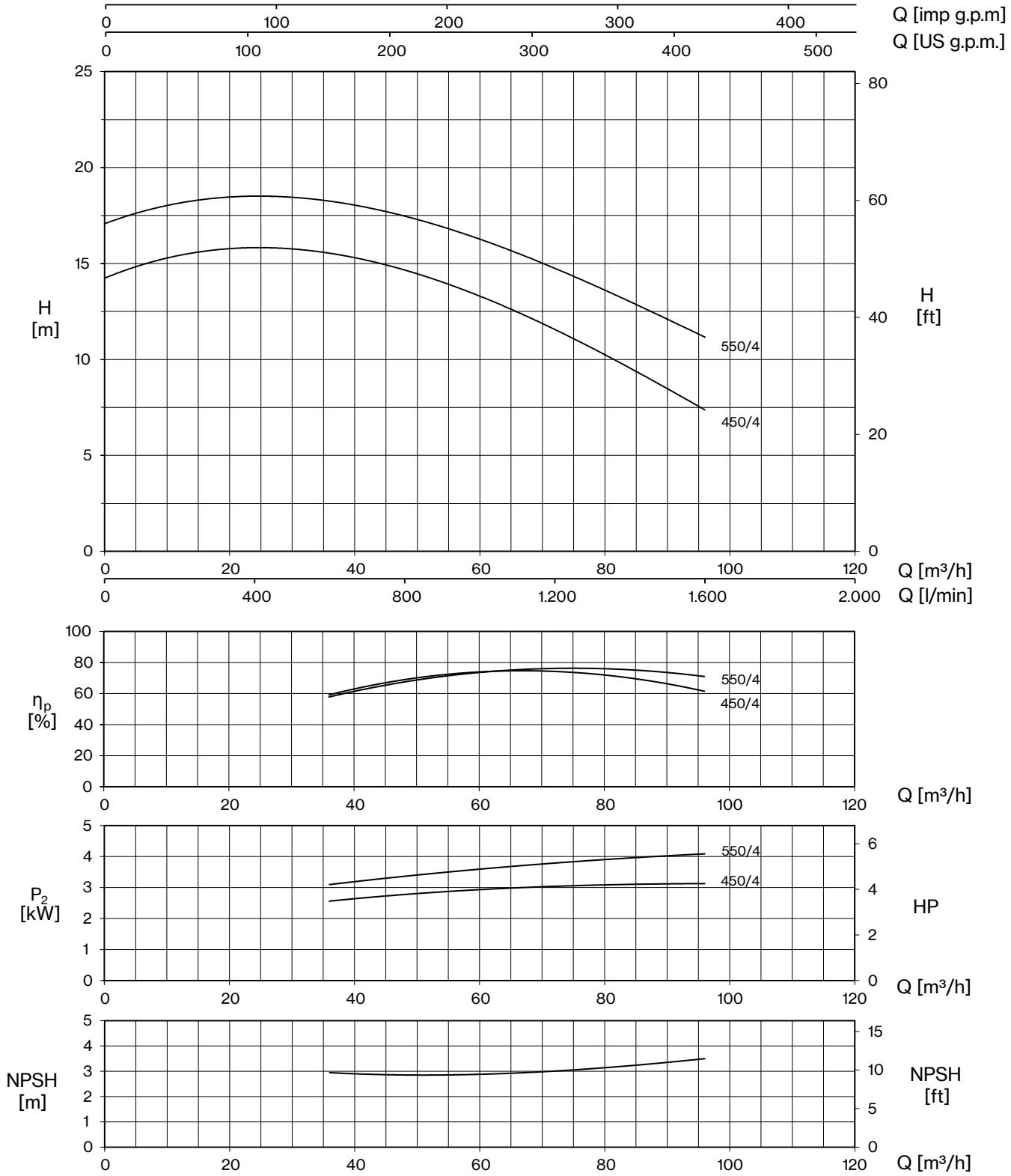


| TYPE - 50 Hz | | P2 | | P1 | | CURRENT | | Q (m³/h - l/min) | | | | | | |
|---|---|---|---|---|---|---|---|---|---|---|---|---|---|---|
| 1~ | 3~ | | | 1~ | 3~ | 1~ 230V | 3~ 400V | 0 | 36 | 48 | 60 | 72 | 84 | 96 |
| | | | | | | | | 0 | 600 | 800 | 1000 | 1200 | 1400 | 1600 |
| | | HP | kW | kW | | A | | H (m) | | | | | | |
| **CS 450/4** | **CST 450/4** | 4 | 3 | 3,6 | 3,6 | 16,1 | 6,5 | 14,2 | 15,5 | 14,7 | 13,4 | 11,5 | 9,6 | 7,4 |
| **-** | **CST 550/4** | 5,5 | 4 | - | 4,7 | - | 8,5 | 17,1 | 18,3 | 17,4 | 16,3 | 14,7 | 13,1 | 11,1 |

# CS

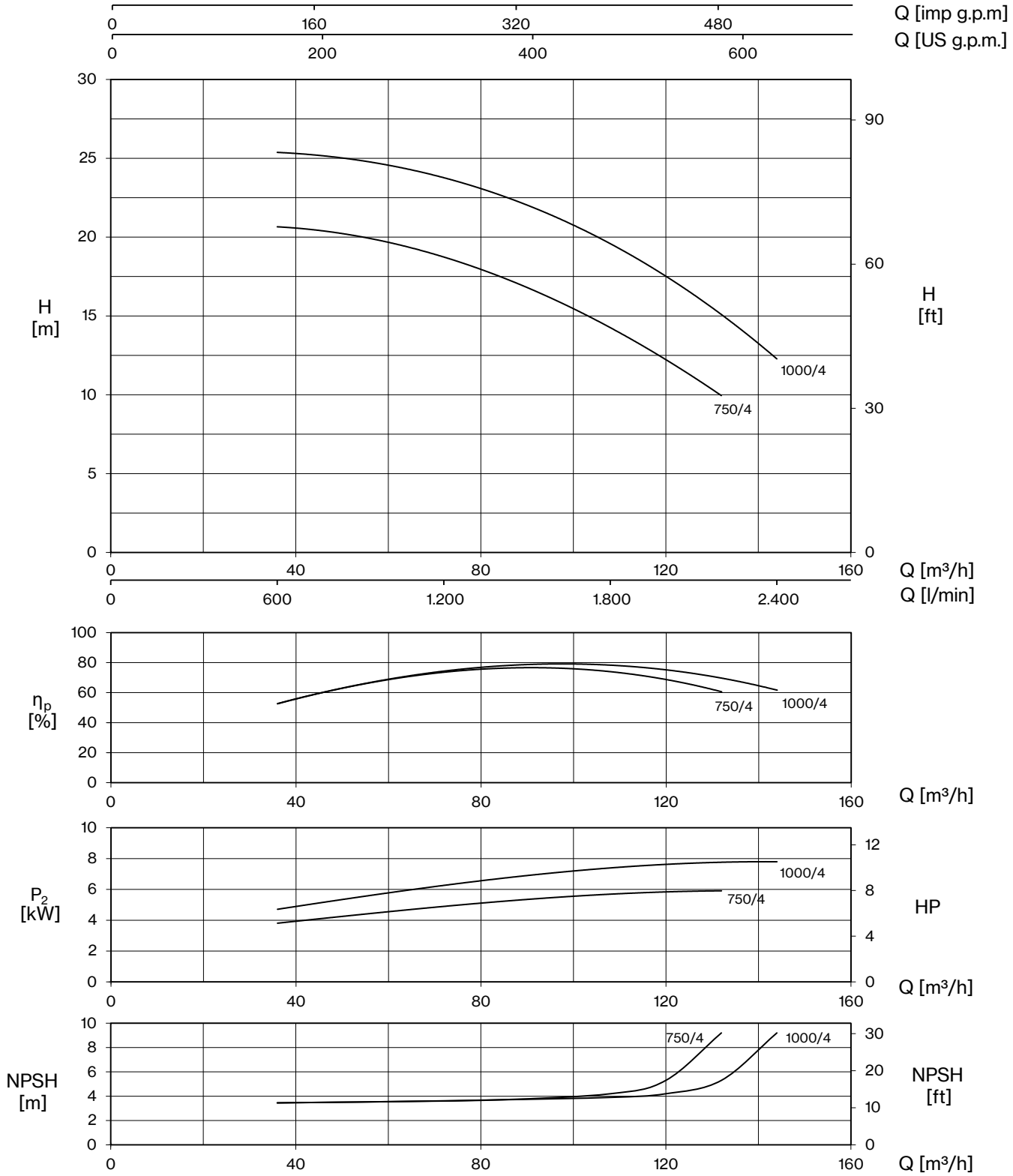


| TYPE - 50 Hz | P2 | | P1 | CURRENT | Q (m³/h - l/min) | | | | | | | | |
|---|---|---|---|---|---|---|---|---|---|---|---|---|---|
| 3~ | | | | 3~ 400V | 0 | 36 | 48 | 60 | 84 | 108 | 120 | 132 | 144 |
| | | | | | 0 | 600 | 800 | 1000 | 1400 | 1800 | 2000 | 2200 | 2400 |
| | HP | kW | kW | A | H (m) | | | | | | | | |
| **CST 750/4** | 7,5 | 5,5 | 6,7 | 11,6 | 18,9 | 20,6 | 20,4 | 19,7 | 17,4 | 14,3 | 12,3 | 9,9 | |
| **CST 1000/4** | 10 | 7,5 | 8,8 | 15,4 | 23,6 | 25,3 | 25,2 | 24,6 | 22,6 | 19,5 | 17,6 | 15,2 | 12,2 |

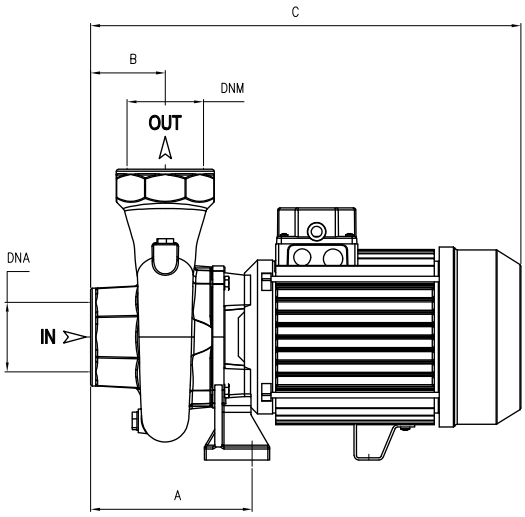


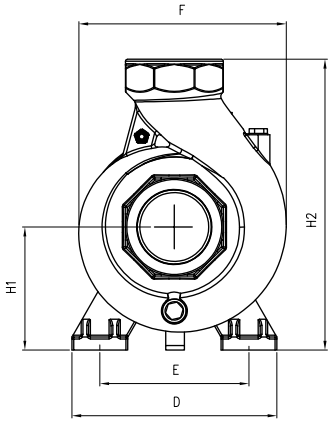


| TYPE | | DIMENSIONS (mm) | | | | | | | | | | | | | Kg | |
|---|---|---|---|---|---|---|---|---|---|---|---|---|---|---|---|---|
| ~1 | ~3 | A | B | C | D | E | F | H1 | H2 | DNA | DNM | I | L | M | ~1 | ~3 |
| **CS 75/2** | **CST 75/2** | 127 | 45 | 315 | 155 | 115 | 178 | 97 | 247 | 2” G | 2” G | 340 | 195 | 280 | 14,5 | 14 |
| **CS 100/2** | **CST 100/2** | 127 | 45 | 315 | 155 | 115 | 178 | 97 | 247 | | | 340 | 195 | 280 | 16 | 15 |
| **CS 120/2** | **CST 120/2** | 127 | 45 | 315 | 155 | 115 | 178 | 97 | 247 | | | 340 | 195 | 280 | 16,5 | 16 |
| **CSB 100/2** | **-** | 130 | 70 | 395 | 180 | 130 | 195 | 90 | 240 | | | 420 | 230 | 309 | 23 | - |
| **CSB 150/2** | **CSBT 150/2** | 130 | 70 | 395 | 180 | 130 | 195 | 90 | 240 | | | 420 | 230 | 309 | 23 | 23 |
| **CS 150/2** | **CST 150/2** | 150 | 53 | 400 | 180 | 140 | 218 | 115 | 285 | 2" G | 2" G | 420 | 230 | 309 | 27 | 27,5 |
| **CS 200/2** | **CST 200/2** | 150 | 53 | 400 | 180 | 140 | 218 | 115 | 285 | | | 420 | 230 | 309 | 26 | 27,5 |
| **CS 250/2** | **CST 250/2** | 150 | 53 | 400 | 180 | 140 | 218 | 115 | 285 | | | 420 | 230 | 309 | 27,5 | 28 |
| **CS 200/3** | **CST 200/3** | 176,5 | 80 | 485 | 184 | 130 | 225 | 112 | 292 | 3” G | 3” G | 520 | 235 | 320 | 33 | 28 |
| **CS 300/3** | **CST 300/3** | 176,5 | 80 | 485 | 184 | 130 | 225 | 112 | 292 | | | 520 | 235 | 320 | 33 | 30,5 |
| **-** | **CST 400/3** | 176,5 | 80 | 485 | 184 | 130 | 225 | 112 | 292 | | | 520 | 235 | 320 | - | 36,5 |
| **CS 450/4** | **CST 450/4** | 165 | 85 | 515 | 200 | 150 | 250 | 130 | 330 | 4” G | 4” G | 546 | 265 | 355 | 46,5 | 42,5 |
| **-** | **CST 550/4** | 165 | 85 | 515 | 200 | 150 | 250 | 130 | 330 | | | 546 | 265 | 355 | - | 47 |
| **-** | **CST 750/4** | 117 | 83 | 559 | 215 | 170 | 254 | 134 | 333 | | | 627 | 287 | 408 | - | 56,5 |
| **-** | **CST 1000/4** | 117 | 83 | 559 | 215 | 170 | 254 | 134 | 333 | | | 627 | 287 | 408 | - | 63 |

# CH

## Threaded Centrifugal

Centrifugal pumps characterized by medium flow rate and stable head as the flow rate changes. Suitable for flood and sprinkler irrigation, water withdrawal from reservoirs or canals and industrial applications.

### Construction features

| | |
|---|---|
| **Pump body** | cast iron |
| **Motor bracket** | cast iron |
| **Impeller** | brass (160÷310)<br>cast iron (350÷550) |
| **Mechanical seal** | ceramic-graphite-NBR |
| **Motor shaft** | stainless steel AISI 303 |
| **Liquid temperature** | 0 - 90 °C |
| **Operating pressure** | max 6 bar |

### Motor

| | |
|---|---|
| **2 poles induction motor** | 3~ 230/400V - 50Hz<br>1~ 230V - 50Hz<br>(with thermal protection up to MEC 80) |
| **Insulation class** | F |
| **Protection degree** | IPX4 |

**CH T 160**

- motor
  - 1~
  - **T** 3~
- pump type

| LOTS | | | | |
|---|---|---|---|---|
| TYPE | TRUCK | | CONTAINER | |
| | PALLET (cm) | N° pumps | PALLET (cm) | N° pumps |
| **CH(T) 160÷210** | 85×110×170 | 40 | 85×110×200 | 48 |
| **CH 310** | 80×120×145 | 24 | 80×120×175 | 30 |
| **CHT 310** | 85×110×170 | 40 | 85×110×200 | 48 |
| **CH(T) 350÷550** | 85×110×150 | 30 | 85×110×180 | 30 |

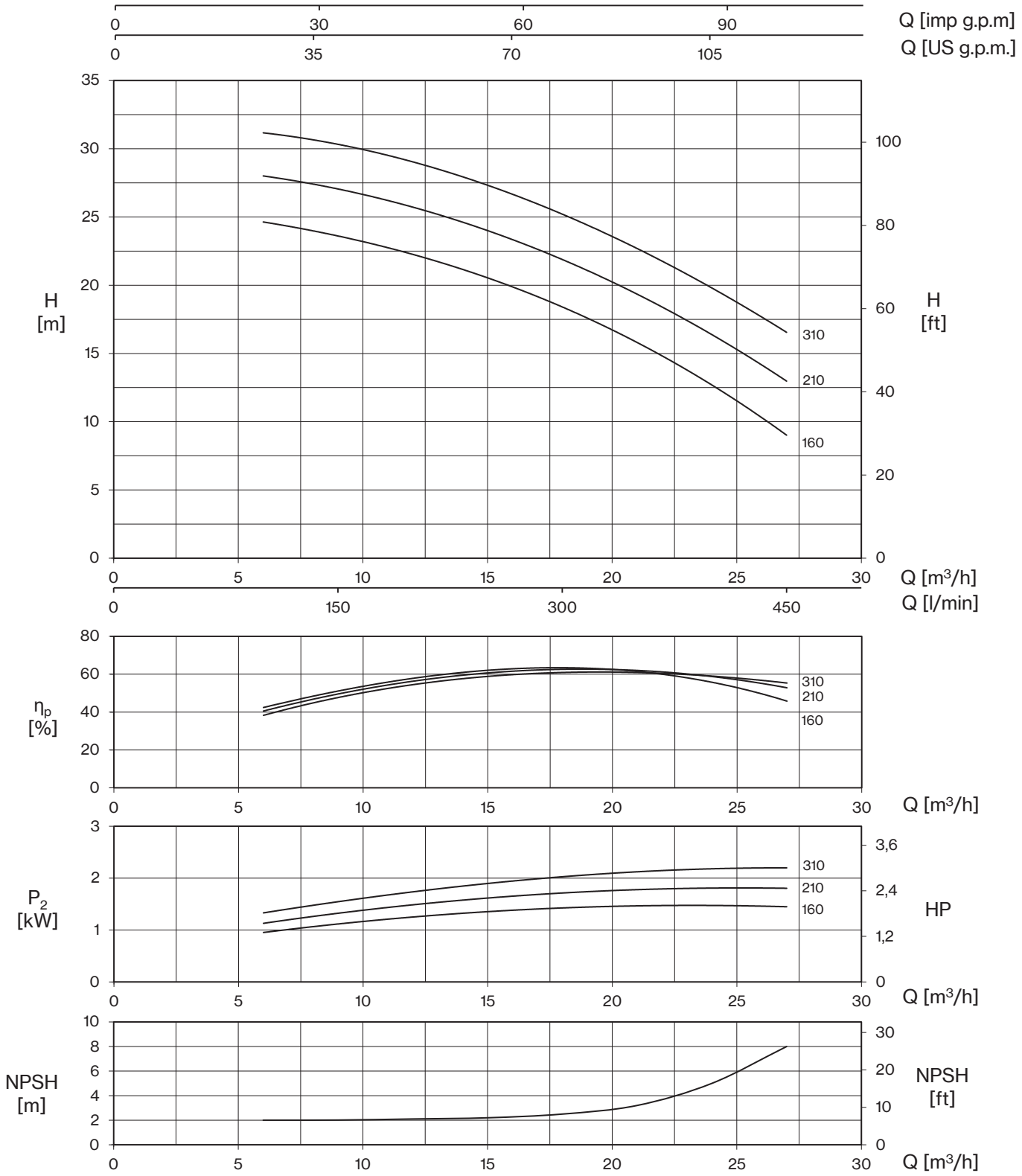


| TYPE - 50 Hz | | P2 | | P1 | | CURRENT | | Q (m³/h - l/min) | | | | | | | | |
|---|---|---|---|---|---|---|---|---|---|---|---|---|---|---|---|---|
| 1~ | 3~ | | | 1~ | 3~ | 1~ 230V | 3~ 400V | 0 | 6 | 9 | 12 | 15 | 18 | 21 | 24 | 27 |
| | | | | | | | | 0 | 100 | 150 | 200 | 250 | 300 | 350 | 400 | 450 |
| | | HP | kW | kW | | A | | H (m) | | | | | | | | |
| **CH 160** | **CHT 160** | 2 | 1,5 | 1,8 | 1,8 | 8,2 | 3,7 | 24,8 | 24,6 | 23,7 | 22,3 | 20,5 | 18,4 | 15,8 | 12,8 | 9,0 |
| **CH 210** | **CHT 210** | 2,5 | 1,85 | 2,3 | 2,1 | 10,4 | 4,3 | 28,3 | 28,0 | 27,1 | 25,7 | 23,9 | 21,9 | 19,3 | 16,4 | 13,0 |
| **CH 310** | **CHT 310** | 3 | 2,2 | 2,6 | 2,6 | 12,3 | 5,2 | 31,6 | 31,2 | 30,3 | 29,0 | 27,3 | 25,3 | 22,7 | 19,7 | 16,6 |

# CH

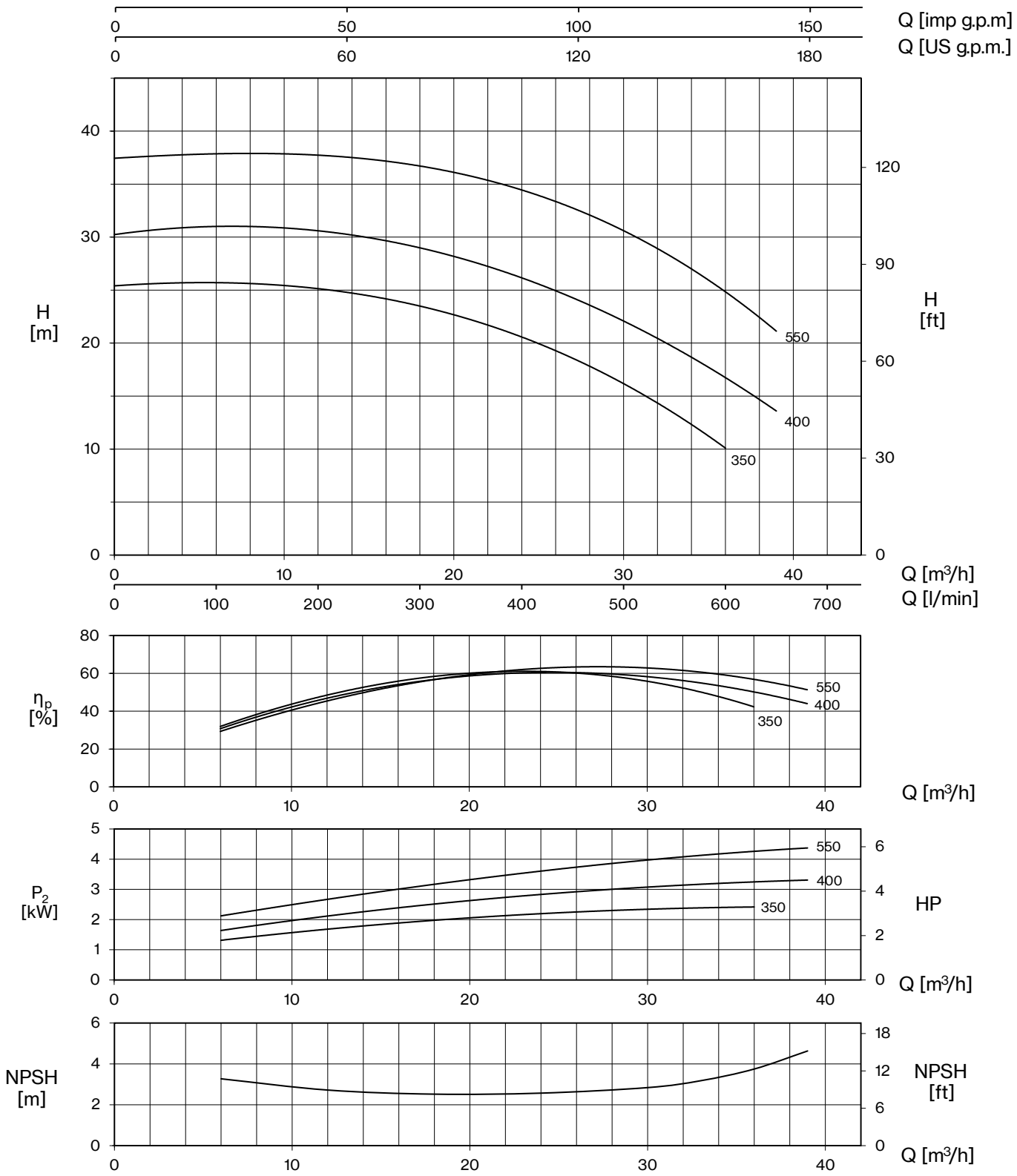


| TYPE - 50 Hz | | P2 | | P1 | | CURRENT | | Q (m³/h - l/min) | | | | | | | | |
|---|---|---|---|---|---|---|---|---|---|---|---|---|---|---|---|---|
| 1~ | 3~ | | | 1~ | 3~ | 1~ 230V | 3~ 400V | 0 | 6 | 12 | 18 | 24 | 30 | 33 | 36 | 39 |
| | | | | | | | | 0 | 100 | 200 | 300 | 400 | 500 | 550 | 600 | 650 |
| | | HP | kW | kW | | A | | H (m) | | | | | | | | |
| **CH 350** | **CHT 350** | 3 | 2,2 | 2,8 | 2,8 | 12,7 | 5,2 | 25,4 | 25,6 | 25,3 | 23,5 | 20,5 | 16,2 | 13,5 | 10,0 | |
| **CH 400** | **CHT 400** | 4 | 3,0 | 3,8 | 3,8 | 17,0 | 6,9 | 30,3 | 30,8 | 30,7 | 29,1 | 26,1 | 22 | 19,5 | 16,7 | 13,6 |
| **-** | **CHT 550** | 5,5 | 4,0 | | 5,0 | - | 9,1 | 37,4 | 37,8 | 37,9 | 36,8 | 34,3 | 30,2 | 28,2 | 25,5 | 20,7 |

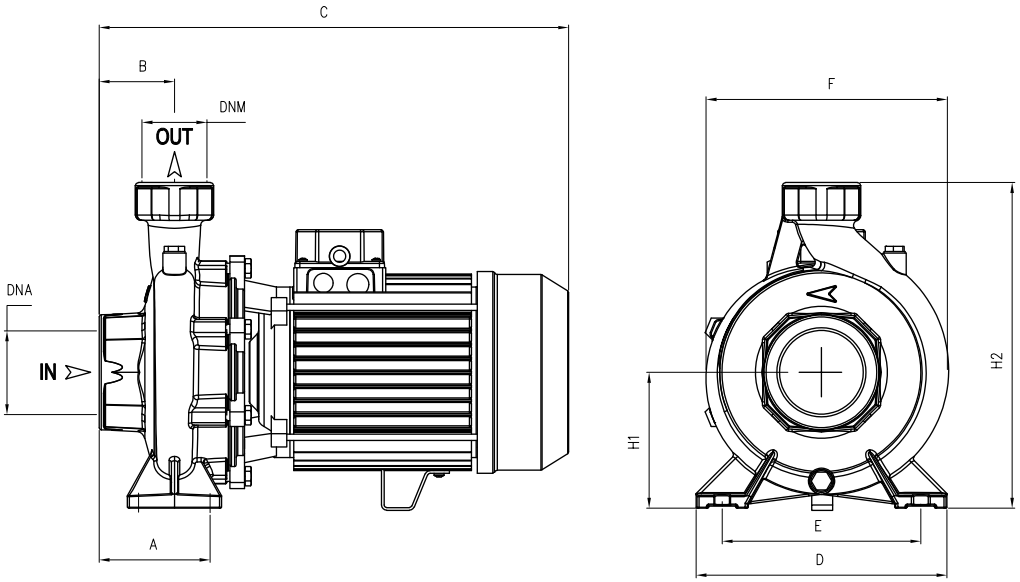


| TYPE | | DIMENSIONS (mm) | | | | | | | | | | | | | Kg | |
|---|---|---|---|---|---|---|---|---|---|---|---|---|---|---|---|---|
| -1 | -3 | A | B | C | D | E | F | H1 | H2 | DNA | DNM | I | L | M | -1 | -3 |
| **CH 160** | **CHT 160** | 105 | 48 | 395 | 200 | 160 | 215 | 110 | 285 | 2” G | 2” G | 420 | 230 | 309 | 26,5 | 27,5 |
| **CH 210** | **CHT 210** | 105 | 48 | 395 | 200 | 160 | 215 | 110 | 285 | | | 420 | 230 | 309 | 26 | 26,5 |
| **CH 310** | **-** | 105 | 48 | 465 | 200 | 160 | 215 | 110 | 285 | | | 520 | 235 | 320 | 35,5 | - |
| **-** | **CHT 310** | 105 | 48 | 395 | 200 | 160 | 215 | 110 | 285 | | | 420 | 230 | 309 | - | 28 |
| **CH 350** | **-** | 105 | 70 | 465 | 240 | 190 | 240 | 126 | 306 | 3” G | 2” G | 530 | 280 | 355 | 38 | - |
| **-** | **CHT 350** | 105 | 70 | 425 | 240 | 190 | 240 | 126 | 306 | | | 530 | 280 | 355 | - | 35 |
| **CH 400** | **-** | 105 | 70 | 480 | 240 | 190 | 240 | 126 | 306 | | | 530 | 280 | 355 | 45,5 | - |
| **-** | **CHT 400** | 105 | 70 | 465 | 240 | 190 | 240 | 126 | 306 | | | 530 | 280 | 355 | - | 38,5 |
| **-** | **CHT 550** | 105 | 70 | 480 | 240 | 190 | 240 | 126 | 306 | | | 530 | 280 | 355 | - | 45,5 |

Pentax®

WATER PUMPS

# CENTRIFUGAL FLANGED PUMPS

# CENTRIFUGAL FLANGED PUMPS

Wide range of centrifugal free axle and monobloc pumps, flanged with axial suction with hydraulic part entirely made of cast iron (CM, CMG, CA), AISI 304 (CMS) and AISI 316 (CAX).

**Applications:**

- Water supply
- Pressurization
- Circulation of water in heating and air conditioning systems
- Fluid transfer in industry and agriculture

# CM-CMG-CA-4CA

**Centrifugal Flanged**
**EN 733**

## 2 Poles

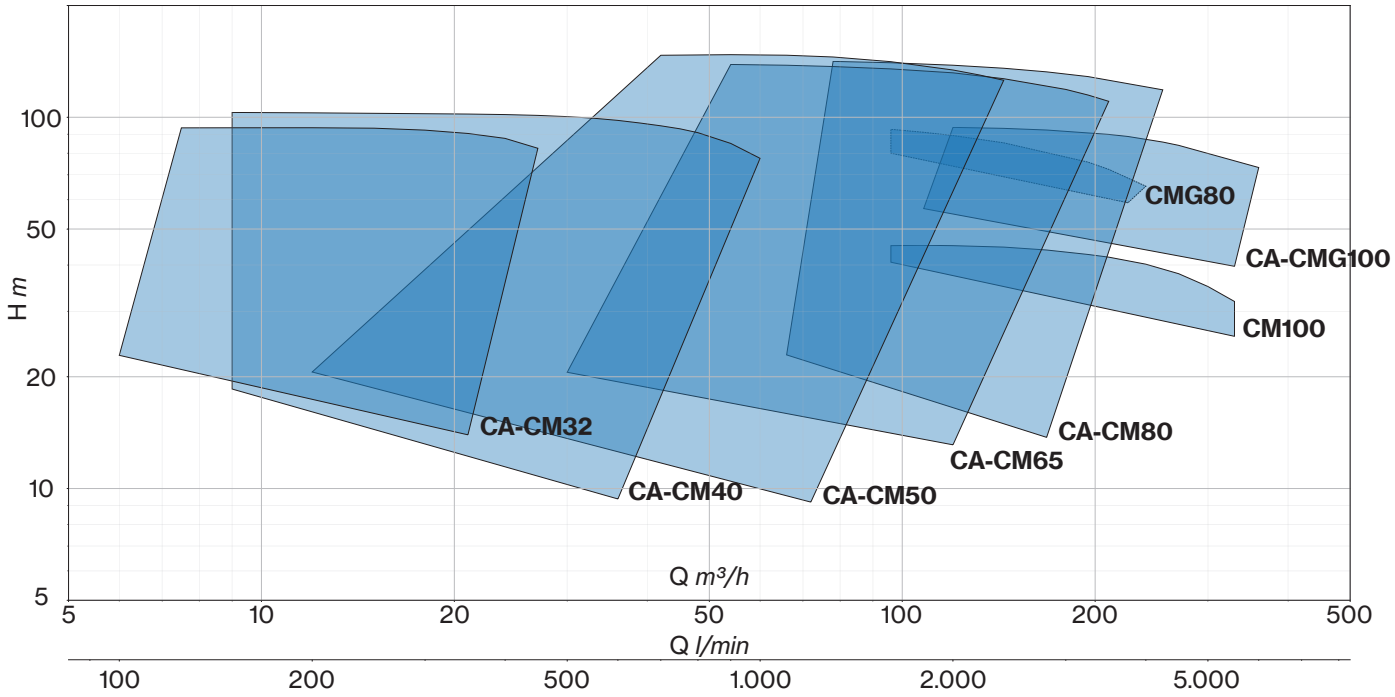


## 4 Poles

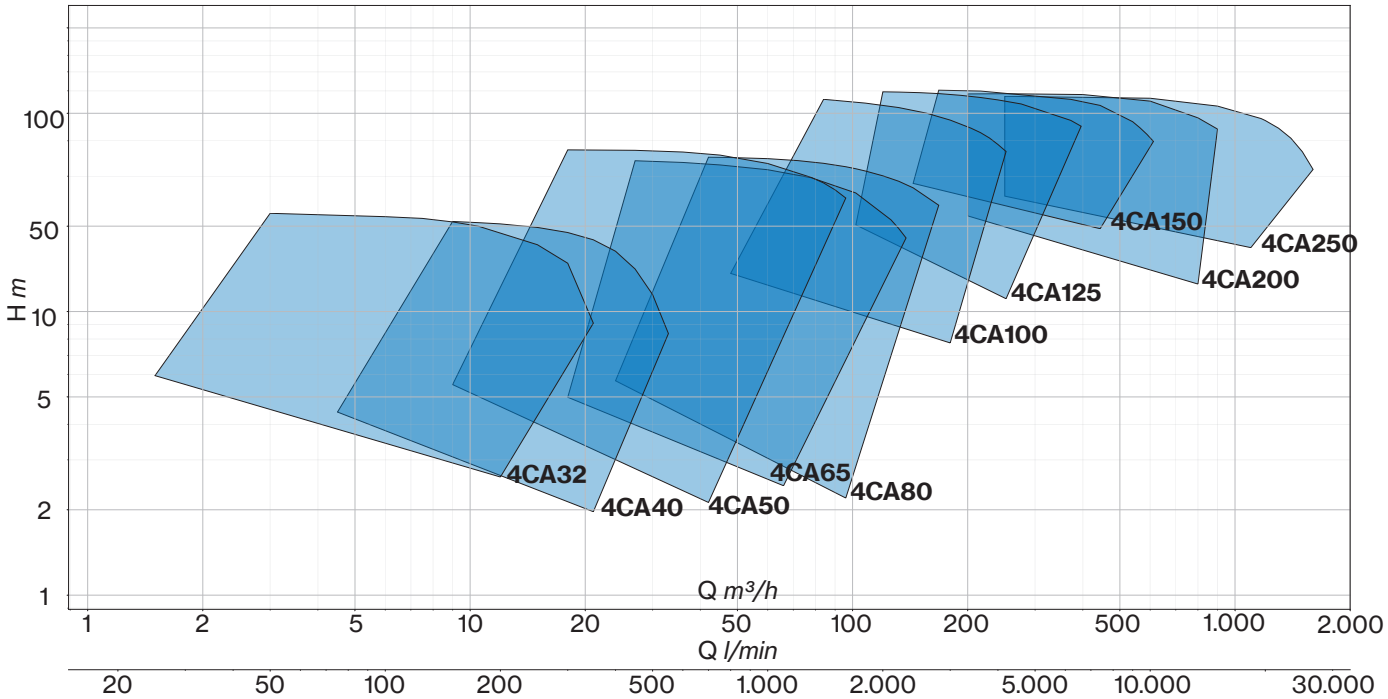

# CM-CMG-CA-4CA

## Centrifugal Flanged EN 733

**CM**: Front suction close-coupled centrifugal pumps with close impeller mounted on IE3 motor shaft extension. Pump casing with axial suction and radial delivery on top, main dimensions and performance according to EN 733.

**CMG-CMGX**: Front suction centrifugal pumps connected to IE3 standard motor (stub-shaft construction). Pump casing with axial suction and radial delivery on top, main dimensions and performance according to EN 733.

**CA-CAX-4CA-4CAX**: Single-stage end-suction centrifugal frame-mounted pumps. Dimensions in accordance with EN 733.

| TYPE | 2 POLES | | | | | | | 4 POLES | | | |
|---|---|---|---|---|---|---|---|---|---|---|---|
| | CM | CMG | CMGX | CA | CAT CAX CATX | Flow rate m³/h | Head m | 4CA 4CAT | 4CAX 4CATX | Flow rate m³/h | Head m |
| **32-160C** | ■ | - | - | ■ | ■ | 6 ÷ 21 | 22,8 ÷ 14 | ■ | ■ | 3 ÷ 12 | 5,6 ÷ 2,4 |
| **32-160B** | ■ | - | - | ■ | ■ | 6 ÷ 24 | 27,7 ÷ 17 | ■ | ■ | 3 ÷ 12 | 6,7 ÷ 3,8 |
| **32-160A** | ■ | - | - | ■ | ■ | 6 ÷ 27 | 36,2 ÷ 22,1 | ■ | ■ | 3 ÷ 13,5 | 9,0 ÷ 5,6 |
| **32-200C** | ■ | - | - | ■ | ■ | 6 ÷ 27 | 40,3 ÷ 28,7 | ■ | ■ | 3 ÷ 18 | 9,9 ÷ 2,6 |
| **32-200B1** | ■ | - | - | - | - | 6 ÷ 27 | 48 ÷ 37,9 | - | - | - | - |
| **32-200B** | ■ | - | - | ■ | ■ | 6 ÷ 30 | 48 ÷ 35,4 | ■ | ■ | 3 ÷ 19 | 12,0 ÷ 4,8 |
| **32-200A1** | ■ | - | - | - | - | 6 ÷ 30 | 58,3 ÷ 46,6 | - | - | - | - |
| **32-200A** | ■ | - | - | ■ | ■ | 6 ÷ 33 | 58,3 ÷ 44,3 | ■ | ■ | 3 ÷ 20 | 14,7 ÷ 5,8 |
| **32-250C** | ■ | - | - | ■ | ■ | 6 ÷ 27 | 72 ÷ 61,3 | ■ | ■ | 3 ÷ 19 | 17,5 ÷ 9,1 |
| **32-250B** | ■ | - | - | ■ | ■ | 7,5 ÷ 27 | 84 ÷ 73,2 | ■ | ■ | 3 ÷ 20 | 20,5 ÷ 11,8 |
| **32-250A1** | ■ | - | - | - | - | 7,5 ÷ 27 | 93,6 ÷ 85,3 | - | - | - | - |
| **32-250A** | ■ | - | - | ■ | ■ | 7,5 ÷ 27 | 93,6 ÷ 85,5 | ■ | ■ | 3 ÷ 21 | 23,1 ÷ 13,2 |
| **40-125C** | ■ | - | - | ■ | ■ | 9 ÷ 36 | 18,5 ÷ 9,4 | ■ | ■ | 3 ÷ 18 | 4,5 ÷ 2 |
| **40-125B** | ■ | - | - | ■ | ■ | 9 ÷ 39 | 23,4 ÷ 13,2 | ■ | ■ | 3 ÷ 21 | 5,6 ÷ 2,2 |
| **40-125A** | ■ | - | - | ■ | ■ | 9 ÷ 42 | 27,6 ÷ 16,8 | ■ | ■ | 3 ÷ 24 | 6,5 ÷ 2,3 |
| **40-160B** | ■ | - | - | ■ | ■ | 9 ÷ 36 | 29,2 ÷ 20,5 | ■ | ■ | 3 ÷ 24 | 7,1 ÷ 2,8 |
| **40-160A** | ■ | - | - | ■ | ■ | 9 ÷ 42 | 34,9 ÷ 23,4 | ■ | ■ | 3 ÷ 24 | 8,5 ÷ 4,6 |
| **40-160AP** | ■ | - | - | ■ | ■ | 9 ÷ 48 | 39,8 ÷ 25,3 | ■ | ■ | 3 ÷ 24 | 9,5 ÷ 5,6 |
| **40-200B1** | ■ | - | - | - | - | 9 ÷ 39 | 45,5 ÷ 32,3 | - | - | - | - |
| **40-200B** | ■ | - | - | ■ | ■ | 9 ÷ 42 | 45,5 ÷ 29,4 | ■ | ■ | 3 ÷ 24 | 11,0 ÷ 5,0 |
| **40-200A1** | ■ | - | - | - | - | 9 ÷ 39 | 56,5 ÷ 44,4 | - | - | - | - |
| **40-200A** | ■ | - | - | ■ | ■ | 9 ÷ 42 | 56,5 ÷ 41,6 | ■ | ■ | 3 ÷ 24 | 13,9 ÷ 8,5 |
| **40-200AP** | ■ | - | - | ■ | ■ | 9 ÷ 45 | 61,4 ÷ 42,2 | ■ | ■ | 3 ÷ 24 | 14,8 ÷ 8,8 |
| **40-250C** | ■ | - | - | ■ | ■ | 9 ÷ 36 | 64,4 ÷ 55,4 | ■ | ■ | 3 ÷ 27 | 15,9 ÷ 5,0 |
| **40-250B** | ■ | - | - | ■ | ■ | 9 ÷ 39 | 79,9 ÷ 62,1 | ■ | ■ | 3 ÷ 30 | 18,4 ÷ 5,2 |
| **40-250A1** | ■ | - | - | - | - | 9 ÷ 42 | 84,6 ÷ 72,8 | - | - | - | - |
| **40-250A** | ■ | - | - | ■ | ■ | 9 ÷ 45 | 84,6 ÷ 69 | ■ | ■ | 3 ÷ 33 | 20,8 ÷ 5,4 |
| **40-250BM** | ■ | - | - | ■ | ■ | 9 ÷ 54 | 93,2 ÷ 72 | ■ | ■ | 3 ÷ 33 | 22,7 ÷ 8,0 |
| **40-250AM** | ■ | - | - | ■ | ■ | 9 ÷ 60 | 103 ÷ 77,5 | ■ | ■ | 3 ÷ 33 | 24,5 ÷ 11,3 |
| **50-125B** | ■ | - | - | ■ | ■ | 12 ÷ 72 | 20,6 ÷ 9,2 | ■ | ■ | 9 ÷ 42 | 5,1 ÷ 1,6 |
| **50-125A** | ■ | - | - | ■ | ■ | 12 ÷ 72 | 24,3 ÷ 14,2 | ■ | ■ | 9 ÷ 45 | 6,1 ÷ 2,1 |
| **50-160B1** | ■ | - | - | - | - | 21 ÷ 66 | 33,5 ÷ 21,5 | - | - | - | - |
| **50-160B** | ■ | - | - | ■ | ■ | 21 ÷ 72 | 33,5 ÷ 18,9 | ■ | ■ | 9 ÷ 42 | 7,8 ÷ 2,6 |
| **50-160A1** | ■ | - | - | - | - | 21 ÷ 72 | 39,8 ÷ 27,6 | - | - | - | - |
| **50-160A** | ■ | - | - | ■ | ■ | 21 ÷ 78 | 39,8 ÷ 25,4 | ■ | ■ | 9 ÷ 48 | 9,5 ÷ 3,4 |
| **50-200C** | ■ | - | - | ■ | ■ | 24 ÷ 72 | 49,7 ÷ 28,9 | ■ | ■ | 9 ÷ 42 | 12,1 ÷ 3,7 |
| **50-200B** | ■ | - | - | ■ | ■ | 24 ÷ 72 | 54,6 ÷ 35 | ■ | ■ | 9 ÷ 45 | 13,3 ÷ 3,9 |
| **50-200A1** | ■ | - | - | - | - | 24 ÷ 78 | 61,8 ÷ 39,8 | - | - | - | - |

| TYPE | 2 POLES | | | | | | | 4 POLES | | | |
|---|---|---|---|---|---|---|---|---|---|---|---|
| | CM | CMG | CMGX | CA | CAT CAX CATX | Flow rate m³/h | Head m | 4CA 4CAT | 4CAX 4CATX | Flow rate m³/h | Head m |
| **50-200A** | ■ | - | - | ■ | ■ | 24 ÷ 78 | 61,8 ÷ 39,8 | ■ | ■ | 9 ÷ 45 | 14,9 ÷ 5,6 |
| **50-250C1** | ■ | - | - | - | - | 27 ÷ 60 | 68,2 ÷ 56,2 | - | - | - | - |
| **50-250C** | ■ | - | - | ■ | ■ | 27 ÷ 66 | 68,2 ÷ 52,1 | ■ | ■ | 12 ÷ 45 | 17,4 ÷ 8 |
| **50-250B** | ■ | - | - | ■ | ■ | 27 ÷ 72 | 78,4 ÷ 58,5 | ■ | ■ | 12 ÷ 48 | 19,6 ÷ 8,2 |
| **50-250A** | ■ | - | - | ■ | ■ | 27 ÷ 78 | 88,3 ÷ 61,8 | ■ | ■ | 12 ÷ 52 | 21,4 ÷ 8,2 |
| **50-315DN** | - | - | - | ■ | - | 42 ÷ 132 | 90,4 ÷ 73,4 | - | - | - | - |
| **50-315C** | - | - | - | - | - | - | - | ■ | ■ | 18 ÷ 84 | 24,7 ÷ 16,8 |
| **50-315CN** | - | - | - | ■ | - | 42 ÷ 132 | 105 ÷ 88,7 | - | - | - | - |
| **50-315B** | - | - | - | - | - | - | - | ■ | ■ | 18 - 90 | 31,4 - 21,6 |
| **50-315BN** | - | - | - | ■ | - | 42 ÷ 144 | 124,3 ÷ 103,5 | - | - | - | - |
| **50-315A** | - | - | - | - | - | - | - | ■ | ■ | 18 - 96 | 37,2 - 25,1 |
| **50-315AN** | - | - | - | ■ | - | 42 ÷ 144 | 146,9 ÷ 125,8 | - | - | - | - |
| **65-125B1** | ■ | - | - | - | - | 30 ÷ 108 | 20,6 ÷ 15 | - | - | - | - |
| **65-125B** | ■ | - | - | ■ | ■ | 30 ÷ 120 | 20,6 ÷ 13,1 | ■ | ■ | 18 ÷ 66 | 5 ÷ 2,4 |
| **65-125A1** | ■ | - | - | - | - | 30 ÷ 120 | 25,2 ÷ 18,8 | - | - | - | - |
| **65-125A** | ■ | - | - | ■ | ■ | 30 ÷ 132 | 25,2 ÷ 16,8 | ■ | ■ | 18 ÷ 72 | 6,4 ÷ 3,4 |
| **65-160C** | ■ | - | - | ■ | ■ | 42 ÷ 144 | 30,6 ÷ 13,9 | ■ | ■ | 24 ÷ 78 | 7,3 ÷ 2,7 |
| **65-160B** | ■ | - | - | ■ | ■ | 42 ÷ 144 | 35,1 ÷ 20,4 | ■ | ■ | 24 ÷ 78 | 8,5 ÷ 3,9 |
| **65-160A1** | ■ | - | - | - | - | 42 ÷ 138 | 42,5 ÷ 31,7 | - | - | - | - |
| **65-160A** | ■ | - | - | ■ | ■ | 42 ÷ 144 | 42,5 ÷ 30,9 | ■ | ■ | 24 ÷ 8 | 10,4 ÷ 5,7 |
| **65-200C1** | ■ | - | - | - | - | 54 ÷ 132 | 46,1 ÷ 28,9 | - | - | - | - |
| **65-200C** | ■ | - | - | ■ | ■ | 54 ÷ 138 | 46,1 ÷ 26,8 | ■ | ■ | 27 ÷ 78 | 11,2 ÷ 5 |
| **65-200B** | ■ | - | - | ■ | ■ | 54 ÷ 144 | 53,9 ÷ 34,6 | ■ | ■ | 27 ÷ 84 | 13 ÷ 5,9 |
| **65-200A** | ■ | - | - | ■ | ■ | 54 ÷ 144 | 61,8 ÷ 44,4 | ■ | ■ | 27 ÷ 90 | 14,9 ÷ 6,4 |
| **65-250B** | ■ | - | - | ■ | ■ | 54 ÷ 144 | 80,6 ÷ 47,3 | ■ | ■ | 27 ÷ 84 | 20 ÷ 7 |
| **65-250A** | ■ | - | - | ■ | ■ | 54 ÷ 150 | 91,6 ÷ 57,9 | ■ | ■ | 30 ÷ 90 | 22,3 ÷ 7,8 |
| **65-315CM** | - | - | - | - | - | - | - | ■ | ■ | 27 ÷ 126 | 23,5 ÷ 13,9 |
| **65-315CN** | - | - | - | ■ | - | 54 ÷ 180 | 96,5 ÷ 80,8 | - | - | - | - |
| **65-315BM** | - | - | - | - | - | - | - | ■ | ■ | 27 ÷ 132 | 28,9 ÷ 17,2 |
| **65-315BN** | - | - | - | ■ | - | 54 ÷ 195 | 117,9 ÷ 96,3 | - | - | - | - |
| **65-315AM** | - | - | - | - | - | - | - | ■ | ■ | 27 ÷ 138 | 34 ÷ 18,2 |
| **65-315AN** | - | - | - | ■ | - | 54 ÷ 210 | 138,8 ÷ 110,4 | - | - | - | - |
| **80-160E** | ■ | - | - | ■ | ■ | 66 ÷ 168 | 22,9 ÷ 13,7 | ■ | ■ | 24 ÷ 96 | 5,7 ÷ 2,2 |
| **80-160D** | ■ | - | - | ■ | ■ | 66 ÷ 180 | 27,3 ÷ 16,4 | ■ | ■ | 27 ÷ 102 | 6,8 ÷ 2,6 |
| **80-160C1** | ■ | - | - | - | - | 66 ÷ 195 | 30,9 ÷ 18,4 | - | - | - | - |
| **80-160C** | ■ | - | - | ■ | ■ | 66 ÷ 195 | 30,9 ÷ 18,4 | ■ | ■ | 30 ÷ 108 | 7,4 ÷ 3,1 |
| **80-160B** | ■ | - | - | ■ | ■ | 66 ÷ 210 | 35,9 ÷ 22 | ■ | ■ | 33 ÷ 120 | 8,9 ÷ 3,5 |
| **80-160A** | ■ | - | - | ■ | ■ | 66 ÷ 225 | 40,5 ÷ 23,9 | ■ | ■ | 36 ÷ 132 | 9,8 ÷ 3,8 |
| **80-200B** | ■ | - | - | ■ | ■ | 72 ÷ 225 | 54,5 ÷ 38,5 | ■ | ■ | 42 ÷ 132 | 13,1 ÷ 7,1 |
| **80-200A** | ■ | - | - | ■ | ■ | 72 ÷ 240 | 61,7 ÷ 43,9 | ■ | ■ | 42 ÷ 144 | 14,7 ÷ 7,5 |
| **80-250B** | - | ■ | ■ | ■ | ■ | 96 ÷ 225 | 80 ÷ 58,8 | ■ | ■ | 42 ÷ 132 | 19,2 ÷ 11,1 |
| **80-250A** | - | ■ | ■ | ■ | ■ | 96 ÷ 240 | 92,8 ÷ 65,2 | ■ | ■ | 42 ÷ 144 | 22,9 ÷ 12,6 |
| **80-315B** | - | - | - | - | - | - | - | ■ | ■ | 42 ÷ 150 | 28,3 ÷ 19,9 |
| **80-315BN** | - | - | - | ■ | - | 78 ÷ 255 | 112,4 ÷ 90,8 | - | - | - | - |
| **80-315A** | - | - | - | - | - | - | - | ■ | ■ | 42 ÷ 168 | 35 ÷ 23,7 |
| **80-315AN** | - | - | - | ■ | - | 78 ÷ 255 | 141,4 ÷ 118,5 | - | - | - | - |
| **100-160B** | ■ | - | - | - | - | 96 ÷ 330 | 40,7 ÷ 25,7 | - | - | - | - |
| **100-160A** | ■ | - | - | - | - | 96 ÷ 330 | 45,1 ÷ 31,9 | - | - | - | - |
| **100-200D** | - | - | - | ■ | ■ | 108 ÷ 300 | 43,1 ÷ 26,6 | ■ | ■ | 48 ÷ 168 | 10,8 ÷ 4,8 |
| **100-200C** | - | - | - | ■ | ■ | 108 ÷ 330 | 48,4 ÷ 28,1 | ■ | ■ | 48 ÷ 168 | 12 ÷ 6,3 |
| **100-200B** | - | ■ | ■ | ■ | ■ | 108 ÷ 330 | 56,8 ÷ 39,7 | ■ | ■ | 48 ÷ 180 | 13,6 ÷ 7,8 |
| **100-200A** | - | ■ | ■ | ■ | ■ | 108 ÷ 360 | 62,2 ÷ 42,5 | ■ | ■ | 48 ÷ 192 | 15,4 ÷ 9,1 |
| **100-250E** | - | - | - | - | - | - | - | ■ | ■ | 60 ÷ 180 | 16,9 ÷ 11,4 |
| **100-250D** | - | - | - | - | - | - | - | ■ | ■ | 60 ÷ 192 | 19,6 ÷ 12,7 |

| TYPE | 2 POLES | | | | | | | 4 POLES | | | |
|---|---|---|---|---|---|---|---|---|---|---|---|
| | CM | CMG | CMGX | CA | CAT CAX CATX | Flow rate | Head | 4CA 4CAT | 4CAX 4CATX | Flow rate | Head |
| | | | | | | m³/h | m | | | m³/h | m |
| **100-250C** | - | ■ | ■ | ■ | ■ | 120 ÷ 300 | 73,2 ÷ 61 | - | - | - | - |
| **100-250B** | - | ■ | ■ | ■ | ■ | 120 ÷ 330 | 83,7 ÷ 67,6 | - | - | - | - |
| **100-250A** | - | ■ | ■ | ■ | ■ | 120 ÷ 360 | 93,9 ÷ 73,2 | ■ | ■ | 60 ÷ 204 | 22,3 ÷ 13,8 |
| **100-315B** | - | - | - | - | - | - | - | ■ | ■ | 72 ÷ 216 | 31,4 ÷ 17,9 |
| **100-315A** | - | - | - | - | - | - | - | ■ | ■ | 72 ÷ 216 | 36,5 ÷ 23,1 |
| **100-400C** | - | - | - | - | - | - | - | ■ | ■ | 84 ÷ 228 | 40,6 ÷ 25,8 |
| **100-400B** | - | - | - | - | - | - | - | ■ | ■ | 84 ÷ 240 | 48,7 ÷ 31,6 |
| **100-400A** | - | - | - | - | - | - | - | ■ | ■ | 84 ÷ 252 | 56 ÷ 36,7 |
| **125-250B** | - | - | - | - | - | - | - | ■ | ■ | 102 ÷ 252 | 20,2 ÷ 11,1 |
| **125-250A** | - | - | - | - | - | - | - | ■ | ■ | 102 ÷ 276 | 24 ÷ 14,7 |
| **125-315C** | - | - | - | - | - | - | - | ■ | ■ | 120 ÷ 348 | 25,8 ÷ 15,7 |
| **125-315B** | - | - | - | - | - | - | - | ■ | ■ | 120 ÷ 372 | 33 ÷ 22,2 |
| **125-315A** | - | - | - | - | - | - | - | ■ | ■ | 120 ÷ 372 | 39,6 ÷ 28,2 |
| **125-400C** | - | - | - | - | - | - | - | ■ | ■ | 120 ÷ 372 | 47,6 ÷ 33,8 |
| **125-400B** | - | - | - | - | - | - | - | ■ | ■ | 120 ÷ 396 | 54,5 ÷ 39,1 |
| **125-400A** | - | - | - | - | - | - | - | ■ | ■ | 120 ÷ 396 | 59,5 ÷ 45 |
| **150-315D** | - | - | - | - | - | - | - | ■ | ■ | 144 ÷ 444 | 28,3 ÷ 19,6 |
| **150-315C** | - | - | - | - | - | - | - | ■ | ■ | 144 ÷ 492 | 32,2 ÷ 21,8 |
| **150-315B** | - | - | - | - | - | - | - | ■ | ■ | 144 ÷ 540 | 36,3 ÷ 23,6 |
| **150-315A** | - | - | - | - | - | - | - | ■ | ■ | 144 ÷ 564 | 41 ÷ 27,2 |
| **150-400C** | - | - | - | - | - | - | - | ■ | ■ | 168 ÷ 564 | 47,8 ÷ 28,7 |
| **150-400B** | - | - | - | - | - | - | - | ■ | ■ | 168 ÷ 588 | 54,4 ÷ 34,3 |
| **150-400A** | - | - | - | - | - | - | - | ■ | ■ | 168 ÷ 612 | 60,3 ÷ 39,8 |
| **Not envisaged in the EN 733 standard** | | | | | | | | | | | |
| **200-315D** | - | - | - | - | - | - | - | ■ | ■ | 200 ÷ 800 | 21,7 ÷ 12,5 |
| **200-315C** | - | - | - | - | - | - | - | ■ | ■ | 200 ÷ 850 | 26,6 ÷ 14,6 |
| **200-315B** | - | - | - | - | - | - | - | ■ | ■ | 200 ÷ 900 | 33,4 ÷ 16,7 |
| **200-315A** | - | - | - | - | - | - | - | ■ | ■ | 200 ÷ 900 | 35,9 ÷ 19,8 |
| **200-400C** | - | - | - | - | - | - | - | ■ | ■ | 200 ÷ 800 | 44,1 ÷ 31,5 |
| **200-400B** | - | - | - | - | - | - | - | ■ | ■ | 200 ÷ 850 | 50,8 ÷ 36,6 |
| **200-400A** | - | - | - | - | - | - | - | ■ | ■ | 200 ÷ 900 | 58,5 ÷ 44 |
| **250-315C** | - | - | - | - | - | - | - | ■ | ■ | 250 ÷ 1100 | 25,5 ÷ 16,8 |
| **250-315B** | - | - | - | - | - | - | - | ■ | ■ | 250 ÷ 1170 | 33 ÷ 19 |
| **250-315A** | - | - | - | - | - | - | - | ■ | ■ | 250 ÷ 1200 | 35 ÷ 20 |
| **250-400D** | - | - | - | - | - | - | - | ■ | ■ | 250 ÷ 1300 | 39,9 ÷ 24,3 |
| **250-400C** | - | - | - | - | - | - | - | ■ | ■ | 250 ÷ 1400 | 45,8 ÷ 27,4 |
| **250-400B** | - | - | - | - | - | - | - | ■ | ■ | 250 ÷ 1500 | 51,7 ÷ 30,3 |
| **250-400A** | - | - | - | - | - | - | - | ■ | ■ | 250 ÷ 1600 | 57,4 ÷ 31,7 |

# CM Series
# Models list and materials

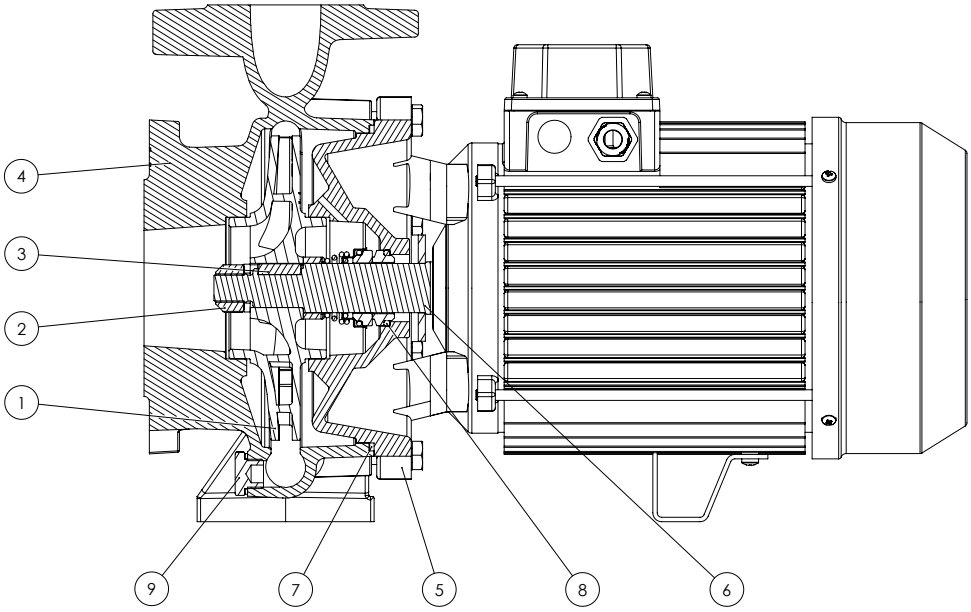


| POS. N. | DENOMINATION | VERSION | MATERIAL | REFERENCE STANDARDS | |
|---|---|---|---|---|---|
| | | | | EUROPE | USA |
| 1 | **Impeller** | Standard | Cast iron G20 | GJL-200 (JL1030) | ASTM Class 30 |
| | | B | Bronze | CuSn10-C (CC480K) | UNS C90700 |
| | | X | Stainless steel | X5CrNiMo17-12-2/ 1.4401 | AISI 316 |
| 2 | **Impeller lock nut and washer** | | Stainless steel | X5CrNiMo17-12-2/ 1.4401 | AISI 316 |
| 3 | **Impeller key** | | Stainless steel | X5CrNiMo17-12-2/ 1.4401 | AISI 316 |
| 4 | **Volute casing** | Up to 80-200 | Cast iron G20 | GJL-200 (JL1030) | ASTM Class 30 |
| | | From 80-250 | Cast iron G25 | GJL-250 (JL1040) | ASTM Class 35 |
| 5 | **Motor bracket** | | Cast iron G20 | GJL-200 (JL1030) | ASTM Class 30 |
| 6 | **Shaft extension** | | Stainless steel | X5CrNi18-10/ 1.4301 | AISI 304 |
| 7 | **O-ring** | Standard | NBR | | |
| | | E | EPDM | | |
| | | V | FKM | | |
| 8 | **Mechanical seal** | | (Search for the material in the mechanical seal table) | | |
| 9 | **Fill and drain plugs** | | Brass | CU ZN 40 PB2 UNI 5705/65 | C37700 |

# CMG Series
# Models list and materials

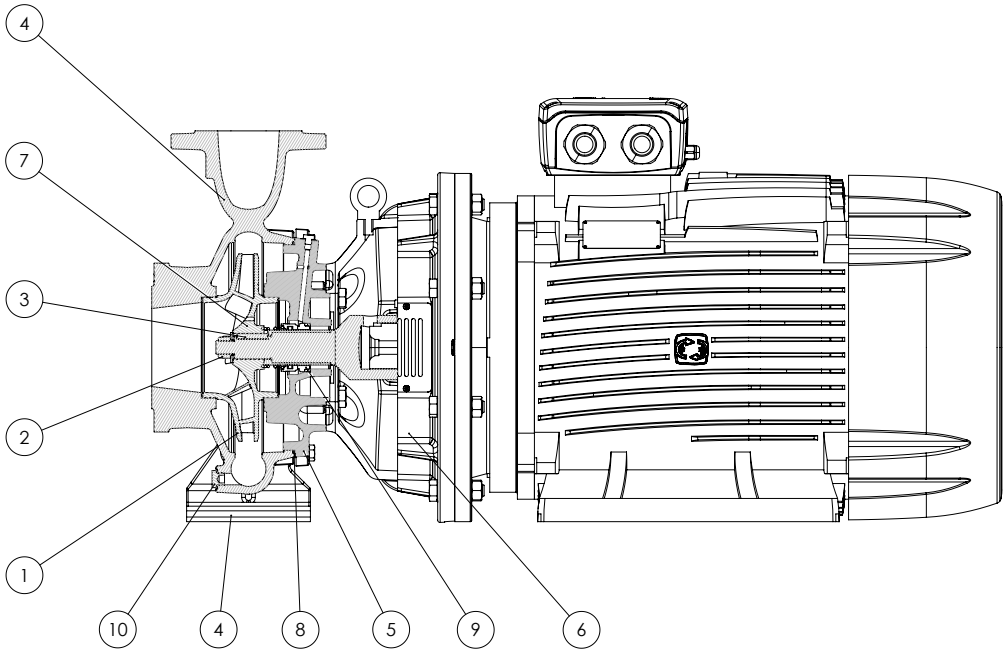


| POS. N. | DENOMINATION | VERSION | MATERIAL | REFERENCE STANDARDS | |
|---|---|---|---|---|---|
| | | | | EUROPE | USA |
| 1 | **Impeller** | Standard | Cast iron G20 | GJL-200 (JL1030) | ASTM Class 30 |
| | | B | Bronze | CuSn10-C (CC480K) | UNS C90700 |
| | | X | Stainless steel | X5CrNiMo17-12-2/ 1.4401 | AISI 316 |
| 2 | **Impeller lock nut and washer** | | Stainless steel | X5CrNiMo17-12-2/ 1.4401 | AISI 316 |
| 3 | **Impeller key** | | Stainless steel | X5CrNiMo17-12-2/ 1.4401 | AISI 316 |
| 4 | **Volute casing** | Standard | Cast iron G25 | GJL-250 (JL1040) | ASTM Class 35 |
| | | X | Stainless steel | X5CrNiMo17-12-2/ 1.4401 | AISI 316 |
| 5 | **Casing cover** | Standard | Cast iron G20 | GJL-200 (JL1030) | ASTM Class 30 |
| | | X | Stainless steel | X5CrNiMo17-12-2/ 1.4401 | AISI 316 |
| 6 | **Motor bracket** | | Cast iron G20 | GJL-200 (JL1030) | ASTM Class 30 |
| 7 | **Stub shaft** | | Stainless steel | X5CrNiMo17-12-2/ 1.4401 | AISI 316 |
| 8 | **O-ring** | Standard | NBR | | |
| | | E | EPDM | | |
| | | V | FKM | | |
| 9 | **Mechanical seal** | | (Search for the material in the mechanical seal table) | | |
| 10 | **Fill and drain plugs** | Fill and drain plugs | Brass | CU ZN 40 PB2 UNI 5705/65 | C37700 |

# CA-4CA Series
# Models list and materials

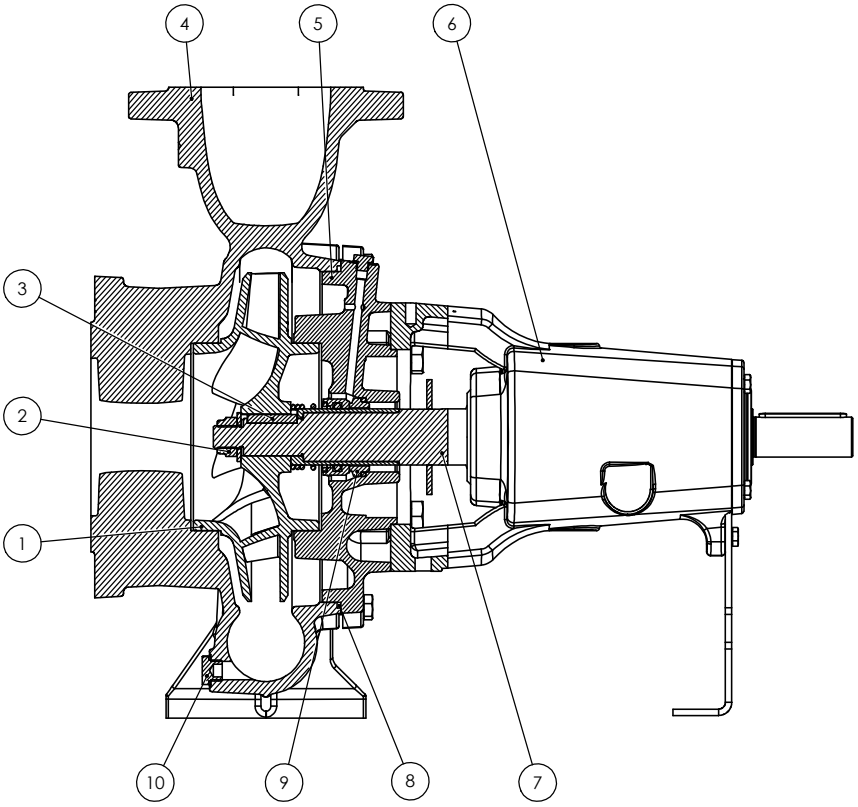


| POS. N. | DENOMINATION | VERSION | MATERIAL | REFERENCE STANDARDS | |
|---|---|---|---|---|---|
| | | | | EUROPE | USA |
| 1 | **Impeller** | Standard | Cast iron G20 | GJL-200 (JL1030) | ASTM Class 30 |
| | | B | Bronze | CuSn10-C (CC480K) | UNS C90700 |
| | | X | Stainless steel | X5CrNiMo17-12-2/ 1.4401 | AISI 316 |
| 2 | **Impeller lock nut and washer** | | Stainless steel | X5CrNiMo17-12-2/ 1.4401 | AISI 316 |
| 3 | **Impeller key** | | Stainless steel | X5CrNiMo17-12-2/ 1.4401 | AISI 316 |
| 4 | **Volute casing** | Up to 80-200 | Cast iron G20 | GJL-200 (JL1030) | ASTM Class 30 |
| | | From 80-250 | Cast iron G25 | GJL-250 (JL1040) | ASTM Class 35 |
| | | X | Stainless steel | X5CrNiMo17-12-2/ 1.4401 | AISI 316 |
| 5 | **Casing cover** | Standard | Cast iron G20 | GJL-200 (JL1030) | ASTM Class 30 |
| | | X | Stainless steel | X5CrNiMo17-12-2/ 1.4401 | AISI 316 |
| 6 | **Bracket** | | Cast iron G20 | GJL-200 (JL1030) | ASTM Class 30 |
| 7 | **Pump shaft wet end** | | Stainless steel | X5CrNiMo17-12-2/ 1.4401 | AISI 316 |
| 8 | **O-ring** | Standard | NBR | | |
| | | E | EPDM | | |
| | | V | FKM | | |
| 9 | **Mechanical seal** | | (Search for the material in the mechanical seal table) | | |
| 10 | **Fill and drain plugs** | Standard | Brass | CU ZN 40 PB2 UNI 5705/65 | C37700 |
| | | X | Stainless steel | X5CrNiMo17-12-2/ 1.4401 | AISI 316 |

# CM ~ 2900 rpm

## Centrifugal Flanged EN 733

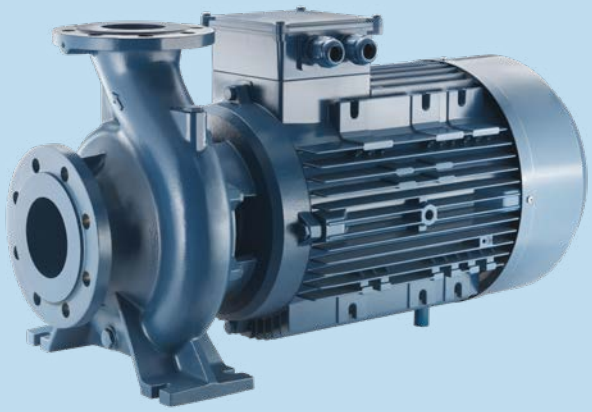

Monobloc horizontal centrifugal pumps, constructed in compliance with EN 733 standards; widely used in water supplies, pressurisation and fire-fighting systems, cooling, heating, irrigation, industrial and agricultural applications.

| Construction features | |
|---|---|
| **Pump body** | cast iron |
| **Motor bracket** | cast iron |
| **Impeller** | cast iron, bronze or stainless steel AISI 316 |
| **Seal type** | mechanical |
| **Pump shaft wet end** | stainless steel AISI 304 |
| **Liquid temperature** | -10 ÷ +90 °C |
| **Operating pressure** | max 10 bar |

| Motor | |
|---|---|
| **2 poles induction motor** | 3~ 230/400V - 50Hz P ⩽ 4kW<br>3~ 400/690V - 50Hz P > 4kW<br>1~ 230V-50Hz |
| **Insulation class** | F |
| **Protection degree** | IPX5 |

**CM 50-160A -X -2E -WF**

- pump type
- impeller: cast iron; **B** bronze; **X** AISI 316
- mech. seal and O-rings: standard; **E** EPDM; **V** FKM; **2E** SiC-SiC-EPDM; **2V** SiC-SiC-FKM
- counter flange: with; **WF** without

# CMG-CMGX ~ 2900 rpm

## Centrifugal Flanged EN 733

Monobloc horizontal centrifugal pumps, constructed in compliance with EN 733 standards, with stub-shaft and bracket for coupling to standard motors; widely used in water supplies, pressurisation and fire-fighting systems.

| Construction features | |
|---|---|
| **Pump body** | cast iron (CMG)<br>stainless steel AISI 316 (CMGX) |
| **Motor bracket** | cast iron |
| **Impeller** | cast iron, bronze,<br>stainless steel AISI 316 (CMG),<br>stainless steel AISI 316 (CMGX) |
| **Seal type** | mechanical |
| **Pump shaft wet end** | stainless steel AISI 316 |
| **Liquid temperature** | -10 ÷ +90 °C |
| **Operating pressure** | max 10 bar |

| Motor | |
|---|---|
| **2 poles induction motor** | 3~ 400/690V - 50Hz |
| **Insulation class** | F |
| **Protection degree** | IPX5 |

**CMGX 80-250 A -X -2E -WF**

- pump type
- pump body material: cast iron / **X** AISI 316
- impeller material: as same as the pump body / **B** bronze / **X** AISI 316
- mech. seal and O-rings: standard / **E** EPDM / **V** FKM / **2E** SiC-SiC-EPDM / **2V** SiC-SiC-FKM
- counter flange: with / **WF** without

# CA-CAX

~ 2900 rpm

# 4CA-4CAX

~ 1450 rpm

## Centrifugal Flanged EN 733

Bare shaft centrifugal pumps constructed in compliance with EN 733 standards; widely used in water supplies, pressurisation and fire-fighting systems.

CA-4CA

CAX-4CAX

## Construction features

| | |
|---|---|
| **Pump body** | cast iron (CA)<br>stainless steel AISI 316 (CAX) |
| **Motor bracket** | cast iron |
| **Impeller** | cast iron, bronze,<br>stainless steel AISI 316 (CA)<br>stainless steel AISI 316 (CAX) |
| **Seal type** | mechanical (CA-CAX) or gland packing<br>graphite impregnated (CAT-CATX) |
| **Pump shaft wet end** | stainless steel AISI 316 |
| **Liquid temperature** | -10 ÷ +90 °C |
| **Operating pressure** | max 10 bar<br>max 14 bar (... -315 ~ 2900 rpm) |

## Motor

Available with IE3-IE4 efficiency class motor

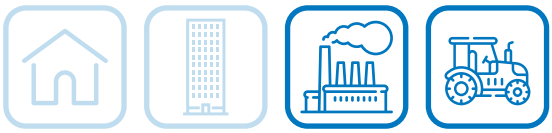

**4CA 80-160A -X -2E -WF**

- poles: 2 poles; **4** 4 poles
- impeller material: as same as the pump body; **B** bronze; **X** AISI 316
- counter flange: with; **WF** without
- mech. seal and O-rings: standard; **E** EPDM; **V** FKM; **2E** SiC-SiC-EPDM; **2V** SiC-SiC-FKM
- pump body material: cast iron; **X** AISI 316
- seal: mechanical; **T** gland packing
- pump type

# CA-CAX

~ 2900 rpm

# 4CA-4CAX

~ 1450 rpm



## Construction versions

The pumps can be fitted next to a motor on a common baseplate, with the pump shaft and the motor shaft connected by a flexible coupling.

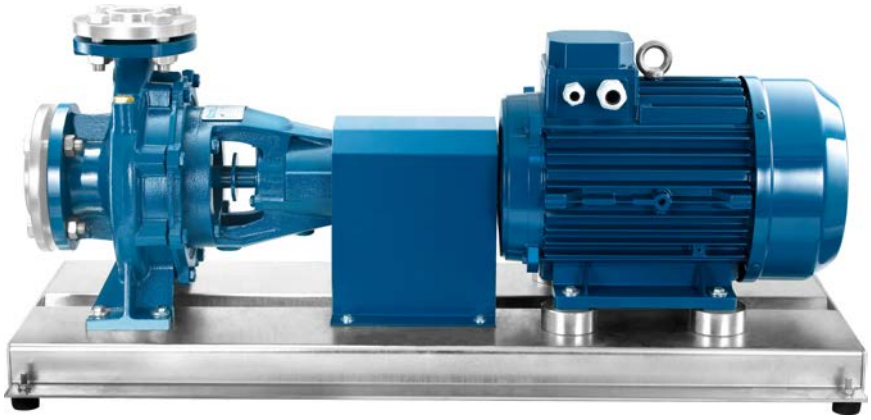

**CA-4CA with motor**
counterflanges supplied separately

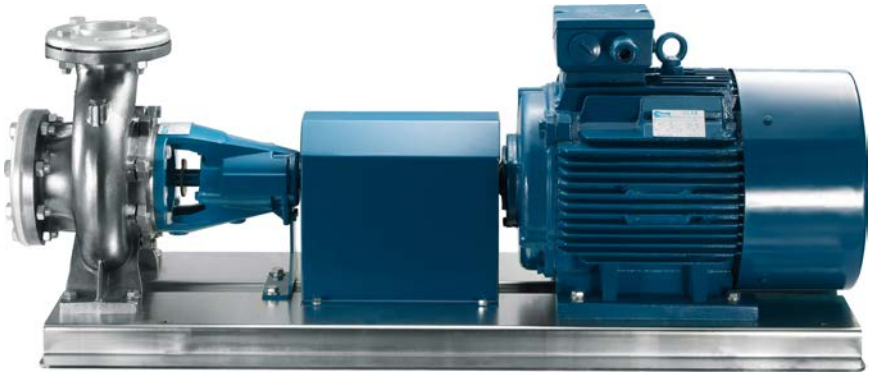

**CAX-4CAX with motor**
counterflanges supplied separately

## Shaft seals versions

The pumps can be provided on request with gland packing instead of mechanical seal.

**CA-CAX-4CA-4CAX**
mechanical seal

**CAT-CATX-4CAT-4CATX**
gland packing seal

| TYPE - 50 Hz | P2 | | P1 | | CURRENT | | Q (m3/h - l/min) | | | | | | | | | | | |
|---|---|---|---|---|---|---|---|---|---|---|---|---|---|---|---|---|---|---|
| | | | 1~ | 3~ | 1~ 230V | 3~ 400V | 0 | 6 | 7,5 | 9 | 12 | 15 | 18 | 21 | 24 | 27 | 30 | 33 |
| | | | | | | | 0 | 100 | 125 | 150 | 200 | 250 | 300 | 350 | 400 | 450 | 500 | 550 |
| | HP | kW | kW | | A | | H (m) | | | | | | | | | | | |
| **32-160C** | 2 | 1,5 | 2,0 | 1,9 | 9,3 | 3,6 | 23,0 | 22,8 | 22,5 | 22,0 | 21,0 | 19,2 | 16,9 | 14,0 | | | | |
| **32-160B** | 3 | 2,2 | 2,7 | 2,6 | 12,4 | 4,9 | 28,0 | 27,7 | 27,4 | 27,0 | 26,2 | 24,9 | 22,9 | 20,1 | 17,0 | | | |
| **32-160A** | 4 | 3 | - | 3,8 | - | 6,8 | 36,1 | 36,2 | 36,0 | 35,6 | 34,6 | 33,2 | 31,4 | 28,9 | 25,7 | 22,1 | | |
| **32-200C** | 5,5 | 4 | 5,2 | 4,9 | 22,9 | 8,9 | 40,2 | 40,3 | 40,1 | 39,8 | 38,9 | 37,7 | 36,1 | 34,2 | 31,6 | 28,7 | | |
| **32-200B1** | 7,5 | 5,5 | - | 6,4 | - | 11,3 | 48,3 | 48,0 | 47,9 | 47,6 | 46,7 | 45,5 | 44,2 | 42,6 | 40,5 | 37,9 | | |
| **32-200B** | 7,5 | 5,5 | - | 6,7 | - | 11,1 | 48,3 | 48,0 | 47,9 | 47,6 | 46,7 | 45,5 | 44,2 | 42,6 | 40,5 | 37,9 | 35,4 | |
| **32-200A1** | 10 | 7,5 | - | 8,2 | - | 14,5 | 57,9 | 58,3 | 58,4 | 58,4 | 58,0 | 57,1 | 55,6 | 53,8 | 51,4 | 49,2 | 46,6 | |
| **32-200A** | 10 | 7,5 | - | 8,6 | - | 14,1 | 57,9 | 58,3 | 58,4 | 58,4 | 58,0 | 57,1 | 55,6 | 53,8 | 51,4 | 49,2 | 46,6 | 44,3 |
| **32-250C** | 12,5 | 9,2 | - | 10,0 | - | 16,8 | 74,6 | | 72,8 | 72,5 | 71,9 | 70,5 | 68,8 | 66,6 | 64,1 | 61,3 | | |
| **32-250B** | 15 | 11 | - | 12,2 | - | 20,0 | 84,8 | | 84,0 | 83,9 | 83,6 | 82,7 | 81,1 | 78,6 | 75,4 | 73,2 | | |
| **32-250A1** | 20 | 15 | - | 13,5 | - | 23,2 | 93,5 | | 93,6 | 93,7 | 93,7 | 93,4 | 92,3 | 90,4 | 87,7 | 85,3 | | |
| **32-250A** | 20 | 15 | - | 13,5 | - | 23,2 | 93,5 | | 93,6 | 93,7 | 93,7 | 93,4 | 92,3 | 90,4 | 87,7 | 85,3 | | |

| TYPE - 50 Hz | P2 | | P1 | | CURRENT | | Q (m³/h - l/min) | | | | | | | | | | | | | | | | |
|---|---|---|---|---|---|---|---|---|---|---|---|---|---|---|---|---|---|---|---|---|---|---|---|
| | | | 1~ | 3~ | 1~ 230V | 3~ 400V | 0 | 9 | 12 | 15 | 18 | 21 | 24 | 27 | 30 | 33 | 36 | 39 | 42 | 45 | 48 | 54 | 60 |
| | | | | | | | 0 | 150 | 200 | 250 | 300 | 350 | 400 | 450 | 500 | 550 | 600 | 650 | 700 | 750 | 800 | 900 | 1000 |
| | HP | kW | kW | | A | | H (m) | | | | | | | | | | | | | | | | |
| **40-125C** | 2 | 1,5 | 2,0 | 1,9 | 9,3 | 3,6 | 17,9 | 18,5 | 18,4 | 18,1 | 17,5 | 16,6 | 15,6 | 14,3 | 12,8 | 11,1 | 9,4 | | | | | | |
| **40-125B** | 3 | 2,2 | 2,7 | 2,6 | 12,4 | 4,9 | 22,6 | 23,4 | 23,3 | 23,1 | 22,7 | 22,0 | 21,0 | 19,9 | 18,6 | 17,0 | 15,1 | 13,2 | | | | | |
| **40-125A** | 4 | 3 | - | 3,6 | - | 6,5 | 26,8 | 27,6 | 27,7 | 27,6 | 27,2 | 26,5 | 25,7 | 24,6 | 23,4 | 22,0 | 20,3 | 18,5 | 16,8 | | | | |
| **40-160B** | 4 | 3 | 3,8 | 3,8 | 16,7 | 6,8 | 28,2 | 29,2 | 29,2 | 28,9 | 28,3 | 27,5 | 26,5 | 25,3 | 23,8 | 22,3 | 20,5 | | | | | | |
| **40-160A** | 5,5 | 4 | 5,0 | 4,9 | 22,5 | 8,8 | 33,8 | 34,9 | 34,8 | 34,5 | 33,9 | 33,2 | 32,4 | 31,3 | 30,0 | 28,5 | 26,9 | 25,2 | 23,4 | | | | |
| **40-160AP** | 7,5 | 5,5 | - | 6,1 | - | 11,0 | 38,6 | 39,8 | 39,9 | 39,8 | 39,4 | 38,7 | 37,9 | 37,0 | 35,8 | 34,4 | 32,9 | 31,1 | 29,3 | 27,4 | 25,3 | | |
| **40-200B1** | 7,5 | 5,5 | - | 6,8 | - | 12,0 | 44,7 | 45,5 | 45,4 | 45,0 | 44,5 | 43,5 | 42,3 | 41,0 | 39,3 | 37,2 | 34,9 | 32,3 | | | | | |
| **40-200B** | 7,5 | 5,5 | - | 6,9 | - | 11,4 | 44,6 | 45,5 | 45,4 | 45,0 | 44,5 | 43,5 | 42,3 | 41,0 | 39,3 | 37,2 | 34,9 | 32,3 | 29,4 | | | | |
| **40-200A1** | 10 | 7,5 | - | 9,0 | - | 15,5 | 56,2 | 56,5 | 56,5 | 56,3 | 55,9 | 55,1 | 54,1 | 52,8 | 51,2 | 49,3 | 47,0 | 44,4 | | | | | |
| **40-200A** | 10 | 7,5 | - | 9,3 | - | 15,1 | 56,2 | 56,5 | 56,5 | 56,3 | 55,9 | 55,1 | 54,1 | 52,8 | 51,2 | 49,3 | 47,0 | 44,4 | 41,6 | | | | |
| **40-200AP** | 12,5 | 9,2 | - | 10,2 | - | 16,8 | 61,7 | 61,4 | 61,2 | 60,8 | 60,0 | 59,1 | 57,9 | 56,4 | 54,7 | 53,1 | 51,1 | 48,5 | 45,5 | 42,2 | | | |
| **40-250C** | 12,5 | 9,2 | - | 11,1 | - | 18,0 | 64,8 | 64,4 | 64,2 | 63,8 | 63,4 | 62,7 | 61,9 | 61,0 | 59,8 | 57,9 | 55,4 | | | | | | |
| **40-250B** | 15 | 11 | - | 13,8 | - | 22,3 | 73,7 | 73,9 | 74,5 | 73,2 | 71,9 | 71,1 | 70,2 | 69,2 | 68,1 | 66,7 | 64,7 | 62,1 | | | | | |
| **40-250A1** | 20 | 15 | - | 16,5 | - | 27,2 | 82,6 | 84,6 | 84,8 | 84,7 | 84,3 | 83,4 | 82,4 | 81,3 | 80,0 | 78,5 | 76,9 | 75,4 | 72,8 | | | | |
| **40-250A** | 20 | 15 | - | 17,5 | - | 29,1 | 82,6 | 84,6 | 84,8 | 84,7 | 84,3 | 83,4 | 82,4 | 81,3 | 80,0 | 78,5 | 76,9 | 75,4 | 72,8 | 69,0 | | | |
| **40-250BM** max 14 bar | 25 | 18,5 | - | 20,6 | - | 34,1 | 92,6 | 93,2 | 93,3 | 93,2 | 93,1 | 92,8 | 92,4 | 91,7 | 90,9 | 89,8 | 88,3 | 86,5 | 84,6 | 82,3 | 79,5 | 72,0 | |
| **40-250AM** max 14 bar | 30 | 22 | - | 24,4 | - | 40,3 | 101,7 | 103,0 | 102,8 | 102,3 | 102,2 | 102,0 | 101,7 | 101,2 | 100,4 | 99,4 | 98,1 | 96,5 | 94,8 | 93,1 | 90,9 | 85,0 | 77,5 |

| TYPE - 50 Hz | P2 | | P1 | | CURRENT | | Q (m³/h - l/min) | | | | | | | | | | | | | | | | | | |
|---|---|---|---|---|---|---|---|---|---|---|---|---|---|---|---|---|---|---|---|---|---|---|---|---|---|
| | | | 1~ | 3~ | 1~ 230V | 3~ 400V | 0 | 12 | 15 | 18 | 21 | 24 | 27 | 30 | 33 | 36 | 39 | 42 | 45 | 48 | 54 | 60 | 66 | 72 | 78 |
| | | | | | | | 0 | 200 | 250 | 300 | 350 | 400 | 450 | 500 | 550 | 600 | 650 | 700 | 750 | 800 | 900 | 1000 | 1100 | 1200 | 1300 |
| | HP | kW | kW | | A | | H (m) | | | | | | | | | | | | | | | | | | |
| **50-125B** | 4 | 3 | 3,6 | 3,8 | 16,1 | 6,8 | 20,0 | 20,6 | 20,6 | 20,4 | 20,3 | 20,1 | 19,9 | 19,6 | 19,2 | 18,7 | 18,2 | 17,6 | 17,0 | 16,4 | 15,0 | 13,2 | 11,3 | 9,2 | |
| **50-125A** | 5,5 | 4 | 5,0 | 4,8 | 22,5 | 8,8 | 23,7 | 24,3 | 24,3 | 24,2 | 24,1 | 23,9 | 23,7 | 23,3 | 23,0 | 22,6 | 22,1 | 21,7 | 21,2 | 20,7 | 19,6 | 18,2 | 16,4 | 14,2 | |
| **50-160B1** | 7,5 | 5,5 | - | 6,5 | - | 11,4 | 32,1 | | | | 33,5 | 33,4 | 33,1 | 32,7 | 32,2 | 31,6 | 31,0 | 30,2 | 29,1 | 28,3 | 26,2 | 23,9 | 21,5 | | |
| **50-160B** | 7,5 | 5,5 | - | 6,5 | - | 10,9 | 32,1 | | | | 33,5 | 33,4 | 33,1 | 32,7 | 32,2 | 31,6 | 31,0 | 30,2 | 29,1 | 28,3 | 26,2 | 23,9 | 21,5 | 18,9 | |
| **50-160A1** | 10 | 7,5 | - | 8,6 | - | 15,1 | 38,1 | | | | 39,8 | 39,8 | 39,7 | 39,5 | 39,2 | 38,8 | 38,3 | 37,7 | 36,7 | 36,0 | 34,2 | 32,2 | 29,7 | 27,4 | |
| **50-160A** | 10 | 7,5 | - | 8,8 | - | 14,4 | 38,1 | | | | 39,8 | 39,8 | 39,7 | 39,5 | 39,2 | 38,8 | 38,3 | 37,7 | 36,7 | 36,0 | 34,2 | 32,2 | 29,7 | 27,4 | 25,4 |
| **50-200C** | 12,5 | 9,2 | - | 10,4 | - | 17,2 | 48,2 | | | | | 49,7 | 49,2 | 48,5 | 47,7 | 46,9 | 45,9 | 44,9 | 43,7 | 42,6 | 40,0 | 36,0 | 32,3 | 28,9 | |
| **50-200B** | 15 | 11 | - | 11,9 | - | 19,5 | 53,1 | | | | | 54,6 | 54,1 | 53,5 | 52,9 | 52,2 | 51,4 | 50,4 | 49,3 | 48,1 | 45,5 | 42,7 | 38,8 | 35,0 | |
| **50-200A1** | 20 | 15 | - | 14,6 | - | 24,7 | 59,9 | | | | | 61,8 | 61,5 | 61,0 | 60,4 | 59,7 | 58,8 | 58,0 | 57,1 | 56,0 | 53,6 | 50,8 | 47,8 | 44,4 | 39,8 |
| **50-200A** | 20 | 15 | - | 14,6 | - | 24,7 | 59,9 | | | | | 61,8 | 61,5 | 61,0 | 60,4 | 59,7 | 58,8 | 58,0 | 57,1 | 56,0 | 53,6 | 50,8 | 47,8 | 44,4 | 39,8 |
| **50-250C1** | 20 | 15 | - | 16,1 | - | 26,6 | 69,2 | | | | | | 68,2 | 67,7 | 67,0 | 66,3 | 65,6 | 64,7 | 63,8 | 62,8 | 59,9 | 56,2 | | | |
| **50-250C** | 20 | 15 | - | 17,2 | - | 28,6 | 69,2 | | | | | | 68,2 | 67,7 | 67,0 | 66,3 | 65,6 | 64,7 | 63,8 | 62,8 | 59,9 | 56,2 | 52,1 | | |
| **50-250B** | 25 | 18,5 | - | 20,7 | - | 34,3 | 78,8 | | | | | | 78,4 | 78,0 | 77,6 | 77,0 | 76,1 | 75,1 | 74,0 | 72,9 | 70,3 | 66,9 | 62,9 | 58,5 | |
| **50-250A** | 30 | 22 | - | 24,8 | - | 40,9 | 88,5 | | | | | | 88,3 | 88,1 | 87,7 | 87,2 | 86,6 | 85,8 | 84,8 | 83,8 | 81,4 | 78,5 | 75,0 | 70,2 | 64,8 |

| TYPE - 50 Hz | P2 | | P1 | 3~ 400V | Q (m³/h - l/min) | | | | | | | | | | | | | | | | | | | | |
|---|---|---|---|---|---|---|---|---|---|---|---|---|---|---|---|---|---|---|---|---|---|---|---|---|---|
| | | | | | 0 | 30 | 33 | 36 | 39 | 42 | 45 | 48 | 54 | 60 | 66 | 72 | 78 | 84 | 96 | 108 | 120 | 132 | 138 | 144 | 150 |
| | | | | | 0 | 500 | 550 | 600 | 650 | 700 | 750 | 800 | 900 | 1000 | 1100 | 1200 | 1300 | 1400 | 1600 | 1800 | 2000 | 2200 | 2300 | 2400 | 2500 |
| | HP | kW | kW | A | H (m) | | | | | | | | | | | | | | | | | | | | |
| **65-125B1** | 7,5 | 5,5 | 6,4 | 11,3 | 19,7 | 20,6 | 20,5 | 20,4 | 20,4 | 20,3 | 20,2 | 20,2 | 20,0 | 19,7 | 19,3 | 18,8 | 18,2 | 17,5 | 16,3 | 15,0 | | | | | |
| **65-125B** | 7,5 | 5,5 | 6,6 | 11,0 | 19,7 | 20,6 | 20,5 | 20,4 | 20,4 | 20,3 | 20,2 | 20,2 | 20,0 | 19,7 | 19,3 | 18,8 | 18,2 | 17,5 | 16,3 | 15,0 | 13,1 | | | | |
| **65-125A1** | 10 | 7,5 | 8,6 | 15,1 | 24,6 | 25,2 | 25,2 | 25,1 | 25,1 | 25,0 | 24,8 | 24,9 | 24,7 | 24,5 | 24,2 | 23,9 | 23,5 | 23,0 | 22,0 | 20,6 | 18,8 | | | | |
| **65-125A** | 10 | 7,5 | 8,8 | 14,4 | 24,6 | 25,2 | 25,2 | 25,1 | 25,1 | 25,0 | 24,9 | 24,9 | 24,7 | 24,5 | 24,2 | 23,9 | 23,5 | 23,0 | 22,0 | 20,6 | 18,8 | 16,8 | | | |
| **65-160C** | 12,5 | 9,2 | 10,1 | 16,8 | 28,9 | | | | | 30,6 | 30,5 | 30,3 | 30,0 | 29,6 | 29,1 | 28,5 | 27,9 | 27,2 | 25,3 | 22,9 | 20,2 | 17,5 | 16,0 | 13,9 | |
| **65-160B** | 15 | 11 | 12,7 | 20,6 | 33,2 | | | | | 35,1 | 35,0 | 34,9 | 34,6 | 34,3 | 33,8 | 33,3 | 32,8 | 32,1 | 30,4 | 28,2 | 25,5 | 22,5 | 21,4 | 20,4 | |
| **65-160A1** | 20 | 15 | 16,8 | 27,6 | 40,1 | | | | | 42,5 | 42,5 | 42,5 | 42,3 | 42,1 | 41,8 | 41,4 | 41,0 | 40,4 | 38,9 | 37,1 | 35,3 | 32,8 | 31,7 | | |
| **65-160A** | 20 | 15 | 17,1 | 28,5 | 40,1 | | | | | 42,5 | 42,5 | 42,5 | 42,3 | 42,1 | 41,8 | 41,4 | 41,0 | 40,4 | 38,9 | 37,1 | 35,3 | 32,8 | 31,7 | 30,9 | |
| **65-200C1** | 20 | 15 | 16,8 | 27,6 | 44,4 | | | | | | | | 46,1 | 45,4 | 44,7 | 44,0 | 43,2 | 42,4 | 40,3 | 37,5 | 33,7 | 28,9 | | | |
| **65-200C** | 20 | 15 | 17,0 | 28,3 | 44,4 | | | | | | | | 46,1 | 45,4 | 44,7 | 44,0 | 43,2 | 42,4 | 40,3 | 37,5 | 33,7 | 28,9 | 26,8 | | |
| **65-200B** | 25 | 18,5 | 21,2 | 34,8 | 51,7 | | | | | | | | 53,9 | 53,4 | 52,7 | 52,0 | 51,3 | 50,4 | 48,6 | 45,9 | 43,0 | 39,4 | 37,1 | 34,6 | |
| **65-200A** | 30 | 22 | 25,4 | 41,7 | 60,3 | | | | | | | | 61,8 | 61,4 | 61,0 | 60,4 | 59,8 | 59,1 | 57,1 | 54,6 | 51,6 | 48,3 | 46,5 | 44,4 | |
| **65-250B** | 40 | 30 | 30,8 | 55,3 | 80,6 | | | | | | | | 80,6 | 79,5 | 78,4 | 77,1 | 75,7 | 74,1 | 70,4 | 66,1 | 61,0 | 54,7 | 51,0 | 47,3 | |
| **65-250A** | 50 | 37 | 37,0 | 69,2 | 91,6 | | | | | | | | 91,6 | 90,8 | 89,8 | 88,6 | 87,4 | 85,9 | 82,5 | 77,8 | 72,8 | 67,4 | 64,3 | 60,8 | 57,9 |

| TYPE - 50 Hz | P2 | | P1 | 3~ 400V | Q (m³/h - l/min) | | | | | | | | | | | | | | | | | |
|---|---|---|---|---|---|---|---|---|---|---|---|---|---|---|---|---|---|---|---|---|---|---|
| | | | | | 0 | 66 | 72 | 78 | 84 | 96 | 108 | 120 | 132 | 138 | 144 | 156 | 168 | 180 | 195 | 210 | 225 | 240 |
| | | | | | 0 | 1100 | 1200 | 1300 | 1400 | 1600 | 1800 | 2000 | 2200 | 2300 | 2400 | 2600 | 2800 | 3000 | 3250 | 3500 | 3750 | 4000 |
| | HP | kW | kW | A | H (m) | | | | | | | | | | | | | | | | | |
| **80-160E** | 12,5 | 9,2 | 9,8 | 16,3 | 21,5 | 22,9 | 22,5 | 22,1 | 21,6 | 20,8 | 19,9 | 18,9 | 17,7 | 17,2 | 16,6 | 15,3 | 13,7 | | | | | |
| **80-160D** | 15 | 11 | 12,2 | 20,0 | 25,4 | 27,3 | 27,0 | 26,6 | 26,3 | 25,4 | 24,5 | 23,5 | 22,4 | 21,8 | 21,2 | 19,9 | 18,3 | 16,4 | | | | |
| **80-160C1** | 20 | 15 | 14,5 | 24,5 | 29,0 | 30,9 | 30,7 | 30,4 | 30,1 | 29,4 | 28,5 | 27,4 | 26,3 | 25,8 | 25,3 | 24,1 | 22,5 | 20,7 | 18,4 | | | |
| **80-160C** | 20 | 15 | 14,5 | 24,5 | 29,0 | 30,9 | 30,7 | 30,4 | 30,1 | 29,4 | 28,5 | 27,4 | 26,3 | 25,8 | 25,3 | 24,1 | 22,5 | 20,7 | 18,4 | | | |
| **80-160B** | 25 | 18,5 | 18,1 | 30,3 | 33,6 | 35,9 | 35,7 | 35,4 | 35,2 | 34,5 | 33,7 | 32,9 | 32,0 | 31,6 | 31,1 | 30,0 | 28,6 | 27,0 | 24,5 | 22,0 | | |
| **80-160A** | 30 | 22 | 22 | 37 | 38 | 40,5 | 40,4 | 40,2 | 40,1 | 39,6 | 39,1 | 38,4 | 37,5 | 37,1 | 36,6 | 35,4 | 34,1 | 32,6 | 30,4 | 28,3 | 23,9 | |
| **80-200B** | 40 | 30 | 32,0 | 57,2 | 50,4 | | | | 54,5 | 53,9 | 53,2 | 52,3 | 51,3 | 50,7 | 50,2 | 48,9 | 47,4 | 45,8 | 43,4 | 40,9 | 38,5 | |
| **80-200A** | 50 | 37 | 38,6 | 71,6 | 57,3 | | | | 61,7 | 61,3 | 60,6 | 59,4 | 58,2 | 57,8 | 57,5 | 56,8 | 55,4 | 53,7 | 51,5 | 49,1 | 46,6 | 43,9 |

| TYPE - 50 Hz | P2 | | P1 | 3~ 400V | Q (m³/h - l/min) | | | | | | | | | | | | | | | | |
|---|---|---|---|---|---|---|---|---|---|---|---|---|---|---|---|---|---|---|---|---|---|
| | | | | | 0 | 96 | 108 | 120 | 132 | 138 | 144 | 156 | 168 | 180 | 195 | 210 | 225 | 240 | 270 | 300 | 330 |
| | | | | | 0 | 1600 | 1800 | 2000 | 2200 | 2300 | 2400 | 2600 | 2800 | 3000 | 3250 | 3500 | 3750 | 4000 | 4500 | 5000 | 5500 |
| | HP | kW | kW | A | H (m) | | | | | | | | | | | | | | | | |
| **100-160B** | 40 | 30 | 31,9 | 57,1 | 41,7 | 40,7 | 40,8 | 40,7 | 40,4 | 40,3 | 40,1 | 39,6 | 39,1 | 38,5 | 37,8 | 37,0 | 36,1 | 35,0 | 32,3 | 29,2 | 25,7 |
| **100-160A** | 50 | 37 | 37,5 | 70,2 | 46,0 | 45,1 | 45,2 | 45,1 | 44,9 | 44,8 | 44,7 | 44,3 | 43,9 | 43,3 | 42,7 | 42,0 | 41,1 | 40,2 | 37,9 | 35,0 | 31,9 |

# CMG-CMGX ~ 2900 rpm

## Centrifugal Flanged EN 733

| TYPE - 50 Hz | P2 | Motor Size | Q (m³/h - l/min) | | | | | | | | | | | | | | | | | | |
|---|---|---|---|---|---|---|---|---|---|---|---|---|---|---|---|---|---|---|---|---|---|
| | | | 0 | 96 | 108 | 120 | 132 | 138 | 144 | 156 | 168 | 180 | 195 | 210 | 225 | 240 | 255 | 270 | 300 | 330 | 360 |
| | | | 0 | 1600 | 1800 | 2000 | 2200 | 2300 | 2400 | 2600 | 2800 | 3000 | 3250 | 3500 | 3750 | 4000 | 4250 | 4500 | 5000 | 5500 | 6000 |
| | kW | | H (m)<br>pump input power (kW) | | | | | | | | | | | | | | | | | | |
| **80-250B** | 45 | 225M | 77,2<br>*14,01* | 80,0<br>*30,93* | 79,0<br>*32,60* | 77,5<br>*34,34* | 75,3<br>*36,13* | 74,2<br>*37,02* | 73,1<br>*37,86* | 71,0<br>*39,38* | 69,0<br>*40,78* | 67,0<br>*42,10* | 64,5<br>*43,60* | 61,8<br>*44,94* | 58,8<br>*46,15* | | | | | | |
| **80-250A** | 55 | 250M | 90,0<br>*16,74* | 92,8<br>*36,56* | 91,1<br>*38,57* | 89,3<br>*40,54* | 87,4<br>*42,46* | 86,4<br>*43,39* | 85,4<br>*44,31* | 83,1<br>*46,12* | 80,7<br>*47,81* | 78,5<br>*49,29* | 75,7<br>*50,92* | 72,4<br>*52,59* | 68,8<br>*54,18* | 65,2<br>*55,50* | | | | | |
| **100-200B** | 45 | 225M | 56,1<br>*21,75* | | 56,8<br>*28,84* | 56,5<br>*29,78* | 56,1<br>*30,74* | 55,9<br>*31,24* | 55,6<br>*31,75* | 55,1<br>*32,81* | 54,5<br>*33,89* | 53,9<br>*35,04* | 53,1<br>*36,50* | 52,2<br>*37,82* | 51,4<br>*38,89* | 50,4<br>*39,85* | 49,0<br>*40,77* | 47,5<br>*41,60* | 43,8<br>*42,92* | 39,7<br>*43,82* | |
| **100-200A** | 55 | 250M | 61,1<br>*24,57* | | 62,2<br>*33,04* | 61,8<br>*34,07* | 61,5<br>*35,11* | 61,2<br>*35,64* | 61,0<br>*36,18* | 60,5<br>*37,28* | 59,9<br>*38,39* | 59,5<br>*39,49* | 58,9<br>*40,86* | 58,3<br>*42,23* | 57,4<br>*43,60* | 56,4<br>*44,97* | 55,2<br>*46,20* | 53,8<br>*47,28* | 50,6<br>*49,05* | 46,8<br>*50,53* | 42,5<br>*51,62* |
| **100-250C** | 55 | 250M | 71,9 | | | 73,2 | 73,1 | 73,0 | 72,9 | 72,6 | 72,2 | 71,8 | 71,1 | 70,3 | 69,3 | 67,9 | 66,4 | 64,7 | 61,0 | | |
| | 75 | 280S | *24,75* | | | *40,12* | *41,93* | *42,84* | *43,70* | *45,28* | *46,77* | *48,21* | *49,94* | *51,65* | *53,38* | *55,05* | *56,66* | *58,19* | *60,99* | | |
| **100-250B** | 75 | 280S | 83,6<br>*29,69* | | | 83,7<br>*47,10* | 83,5<br>*49,06* | 83,4<br>*50,04* | 83,2<br>*51,01* | 82,9<br>*52,92* | 82,5<br>*54,76* | 82,1<br>*56,47* | 81,4<br>*58,46* | 80,8<br>*60,26* | 80,0<br>*61,86* | 79,0<br>*63,49* | 77,9<br>*65,17* | 76,4<br>*66,93* | 72,0<br>*70,91* | 67,6<br>*73,78* | |
| **100-250A** | 90 | 280M | 93,5<br>*32,71* | | | 93,9<br>*51,99* | 93,7<br>*54,14* | 93,5<br>*55,23* | 93,4<br>*56,31* | 92,9<br>*58,48* | 92,4<br>*60,60* | 91,8<br>*62,57* | 90,9<br>*64,88* | 89,9<br>*66,97* | 88,8<br>*68,84* | 87,4<br>*70,81* | 85,7<br>*72,81* | 84,0<br>*74,73* | 80,4<br>*78,17* | 75,8<br>*81,33* | 70,8<br>*84,50* |

| TYPE - 50 Hz | P2 | Motor Size | Q (m³/h - l/min) | | | | | | | | | | | |
|---|---|---|---|---|---|---|---|---|---|---|---|---|---|---|
| | | | 0 | 6 | 7,5 | 9 | 12 | 15 | 18 | 21 | 24 | 27 | 30 | 33 |
| | | | 0 | 100 | 125 | 150 | 200 | 250 | 300 | 350 | 400 | 450 | 500 | 550 |
| | kW | | H (m)<br>*pump input power (kW)* | | | | | | | | | | | |
| **32-160C** | 1,5 | 90S | 23,0<br>*0,57* | 22,8<br>*0,93* | 22,5<br>*1,02* | 22,0<br>*1,10* | 21,0<br>*1,26* | 19,2<br>*1,40* | 16,9<br>*1,52* | 14,0<br>*1,61* | | | | |
| **32-160B** | 2,2 | 90L | 28,0<br>*0,83* | 27,7<br>*1,24* | 27,4<br>*1,35* | 27,0<br>*1,45* | 26,2<br>*1,65* | 24,9<br>*1,83* | 22,9<br>*1,99* | 20,1<br>*2,13* | 17,0<br>*2,25* | | | |
| **32-160A** | 3 | 100L | 36,1 | 36,2 | 36,0 | 35,6 | 34,6 | 33,2 | 31,4 | 28,9 | 25,7 | 22,1 | | |
| | 4 | 112M | *1,29* | *1,80* | *1,94* | *2,07* | *2,32* | *2,55* | *2,76* | *2,94* | *3,11* | *3,25* | | |
| **32-200C** | 4 | 112M | 40,2 | 40,3 | 40,1 | 39,8 | 38,9 | 37,7 | 36,1 | 34,2 | 31,6 | 28,7 | | |
| | 5,5 | 132S | *1,61* | *2,27* | *2,45* | *2,63* | *2,96* | *3,27* | *3,56* | *3,82* | *4,08* | *4,31* | | |
| **32-200B** | 5,5 | 132S | 48,3 | 48,0 | 47,9 | 47,6 | 46,7 | 45,5 | 44,2 | 42,6 | 40,5 | 37,9 | 35,4 | |
| | 7,5 | 132S | *2,35* | *3,16* | *3,37* | *3,57* | *3,97* | *4,35* | *4,71* | *5,05* | *5,36* | *5,66* | *5,93* | |
| **32-200A** | 7,5 | 132S | 57,9<br>*3,06* | 58,3<br>*4,03* | 58,4<br>*4,28* | 58,4<br>*4,53* | 58,0<br>*5,02* | 57,1<br>*5,50* | 55,6<br>*5,92* | 53,8<br>*6,34* | 51,4<br>*6,72* | 49,2<br>*7,08* | 46,6<br>*7,42* | 44,3<br>*7,72* |
| **32-250C** | 11 | 160M | 74,6<br>*4,25* | | 72,8<br>*5,69* | 72,5<br>*6,00* | 71,9<br>*6,59* | 70,5<br>*7,17* | 68,8<br>*7,69* | 66,6<br>*8,17* | 64,1<br>*8,67* | 61,3<br>*9,08* | | |
| **32-250B** | 11 | 160M | 84,8<br>*5,16* | | 84,0<br>*6,93* | 83,9<br>*7,29* | 83,6<br>*7,99* | 82,7<br>*8,66* | 81,1<br>*9,28* | 78,6<br>*9,87* | 75,4<br>*10,44* | 73,2<br>*11,05* | | |
| **32-250A** | 15 | 160M | 93,5<br>*5,71* | | 93,6<br>*7,59* | 93,7<br>*7,99* | 93,7<br>*8,82* | 93,4<br>*9,59* | 92,3<br>*10,35* | 90,4<br>*11,07* | 87,7<br>*11,72* | 85,3<br>*12,34* | | |

| TYPE - 50 Hz | P2 | Motor Size | Q (m³/h - l/min) | | | | | | | | | | | | | | | | |
|---|---|---|---|---|---|---|---|---|---|---|---|---|---|---|---|---|---|---|---|
| | | | 0 | 9 | 12 | 15 | 18 | 21 | 24 | 27 | 30 | 33 | 36 | 39 | 42 | 45 | 48 | 54 | 60 |
| | | | 0 | 150 | 200 | 250 | 300 | 350 | 400 | 450 | 500 | 550 | 600 | 650 | 700 | 750 | 800 | 900 | 1000 |
| | kW | | H (m)<br>*pump input power (kW)* | | | | | | | | | | | | | | | | |
| **40-125C** | 1,5 | 90S | 17,9 | 18,5 | 18,4 | 18,1 | 17,5 | 16,6 | 15,6 | 14,3 | 12,8 | 11,1 | 9,4 | | | | | | |
| | 2,2 | 90L | *0,56* | *0,96* | *1,09* | *1,21* | *1,31* | *1,41* | *1,48* | *1,53* | *1,57* | *1,59* | *1,60* | | | | | | |
| **40-125B** | 2,2 | 90L | 22,6 | 23,4 | 23,3 | 23,1 | 22,7 | 22,0 | 21,0 | 19,9 | 18,6 | 17,0 | 15,1 | 13,2 | | | | | |
| | 3 | 100L | *0,82* | *1,30* | *1,48* | *1,63* | *1,76* | *1,89* | *2,00* | *2,09* | *2,16* | *2,22* | *2,27* | *2,30* | | | | | |
| **40-125A** | 3 | 100L | 26,8<br>*1,10* | 27,6<br>*1,64* | 27,7<br>*1,83* | 27,6<br>*2,03* | 27,2<br>*2,20* | 26,5<br>*2,37* | 25,7<br>*2,52* | 24,6<br>*2,65* | 23,4<br>*2,76* | 22,0<br>*2,86* | 20,3<br>*2,95* | 18,5<br>*3,02* | 16,8<br>*3,08* | | | | |
| **40-160B** | 3 | 100L | 28,2 | 29,2 | 29,2 | 28,9 | 28,3 | 27,5 | 26,5 | 25,3 | 23,8 | 22,3 | 20,5 | | | | | | |
| | 4 | 112M | *1,26* | *1,92* | *2,13* | *2,33* | *2,51* | *2,67* | *2,82* | *2,96* | *3,08* | *3,17* | *3,25* | | | | | | |
| **40-160A** | 4 | 112M | 33,8 | 34,9 | 34,8 | 34,5 | 33,9 | 33,2 | 32,4 | 31,3 | 30,0 | 28,5 | 26,9 | 25,2 | 23,4 | | | | |
| | 5,5 | 132S | *1,62* | *2,33* | *2,58* | *2,81* | *3,04* | *3,25* | *3,44* | *3,62* | *3,78* | *3,93* | *4,06* | *4,16* | *4,25* | | | | |
| **40-160AP** | 5,5 | 132S | 38,6<br>*1,90* | 39,8<br>*2,76* | 39,9<br>*3,06* | 39,8<br>*3,33* | 39,4<br>*3,60* | 38,7<br>*3,85* | 37,9<br>*4,08* | 37,0<br>*4,29* | 35,8<br>*4,49* | 34,4<br>*4,67* | 32,9<br>*4,84* | 31,1<br>*5,00* | 29,3<br>*5,14* | 27,4<br>*5,27* | 25,3<br>*5,39* | | |
| **40-200B** | 5,5 | 132S | 44,6 | 45,5 | 45,4 | 45,0 | 44,5 | 43,5 | 42,3 | 41,0 | 39,3 | 37,2 | 34,9 | 32,3 | 29,4 | | | | |
| | 7,5 | 132S | *2,32* | *3,25* | *3,62* | *3,96* | *4,27* | *4,57* | *4,85* | *5,11* | *5,35* | *5,57* | *5,76* | *5,94* | *6,13* | | | | |
| **40-200A** | 7,5 | 132S | 56,2 | 56,5 | 56,5 | 56,3 | 55,9 | 55,1 | 54,1 | 52,8 | 51,2 | 49,3 | 47,0 | 44,4 | 41,6 | | | | |
| | 11 | 160M | *3,48* | *4,63* | *5,08* | *5,51* | *5,91* | *6,31* | *6,68* | *7,01* | *7,32* | *7,63* | *7,90* | *8,14* | *8,37* | | | | |
| **40-200AP** | 7,5 | 132S | 61,7 | 61,4 | 61,2 | 60,8 | 60,0 | 59,1 | 57,9 | 56,4 | 54,7 | 53,1 | 51,1 | 48,5 | 45,5 | 42,2 | | | |
| | 11 | 160M | *3,50* | *4,81* | *5,30* | *5,74* | *6,16* | *6,56* | *6,95* | *7,31* | *7,65* | *7,96* | *8,25* | *8,51* | *8,73* | *8,93* | | | |
| **40-250C** | 11 | 160M | 64,8<br>*4,23* | 64,4<br>*5,50* | 64,2<br>*6,02* | 63,8<br>*6,56* | 63,4<br>*7,11* | 62,7<br>*7,65* | 61,9<br>*8,14* | 61,0<br>*8,63* | 59,8<br>*9,12* | 57,9<br>*9,57* | 55,4<br>*10,01* | | | | | | |
| **40-250B** | 11 | 160M | 73,7 | 73,9 | 74,5 | 73,2 | 71,9 | 71,1 | 70,2 | 69,2 | 68,1 | 66,7 | 64,7 | 62,1 | | | | | |
| | 15 | 160M | *5,33* | *6,74* | *7,38* | *7,96* | *8,53* | *9,10* | *9,69* | *10,28* | *10,87* | *11,43* | *11,91* | *12,39* | | | | | |
| **40-250A** | 15 | 160M | 82,6 | 84,6 | 84,8 | 84,7 | 84,3 | 83,4 | 82,4 | 81,3 | 80,0 | 78,5 | 76,9 | 75,4 | 72,8 | 69,0 | | | |
| | 18,5 | 160L | *6,57* | *8,36* | *9,03* | *9,74* | *10,45* | *11,11* | *11,76* | *12,44* | *13,08* | *13,66* | *14,23* | *14,80* | *15,37* | *15,93* | | | |
| **40-250BM**<br>max 14 bar | 18,5 | 160L | 92,6<br>*7,41* | 93,2<br>*9,12* | 93,3<br>*9,78* | 93,2<br>*10,48* | 93,1<br>*11,18* | 92,8<br>*11,91* | 92,4<br>*12,65* | 91,7<br>*13,38* | 90,9<br>*14,06* | 89,8<br>*14,73* | 88,3<br>*15,38* | 86,5<br>*16,00* | 84,6<br>*16,60* | 82,3<br>*17,18* | 79,5<br>*17,74* | 72,0<br>*18,83* | |
| **40-250AM**<br>max 14 bar | 22 | 180M | 101,7<br>*8,80* | 103,0<br>*10,63* | 102,8<br>*11,26* | 102,3<br>*11,93* | 102,2<br>*12,69* | 102,0<br>*13,46* | 101,7<br>*14,21* | 101,2<br>*14,97* | 100,4<br>*15,74* | 99,4<br>*16,50* | 98,1<br>*17,22* | 96,5<br>*17,92* | 94,8<br>*18,61* | 93,1<br>*19,29* | 90,9<br>*19,96* | 85,0<br>*21,28* | 77,5<br>*22,45* |

# CA-CAX ~ *EN 733*

| TYPE - 50 Hz | P2 | Motor Size | Q (m³/h - l/min) | | | | | | | | | | | | | | | | | | |
|---|---|---|---|---|---|---|---|---|---|---|---|---|---|---|---|---|---|---|---|---|---|
| | | | 0 | 12 | 15 | 18 | 21 | 24 | 27 | 30 | 33 | 36 | 39 | 42 | 45 | 48 | 54 | 60 | 66 | 72 | 78 |
| | | | 0 | 200 | 250 | 300 | 350 | 400 | 450 | 500 | 550 | 600 | 650 | 700 | 750 | 800 | 900 | 1000 | 1100 | 1200 | 1300 |
| | kW | | H (m)<br>*pump input power (kW)* | | | | | | | | | | | | | | | | | | |
| **50-125B** | 3 | 100L | 20,0<br>*1,15* | 20,6<br>*1,65* | 20,6<br>*1,79* | 20,4<br>*1,93* | 20,3<br>*2,07* | 20,1<br>*2,19* | 19,9<br>*2,28* | 19,6<br>*2,37* | 19,2<br>*2,49* | 18,7<br>*2,63* | 18,2<br>*2,75* | 17,6<br>*2,84* | 17,0<br>*2,92* | 16,4<br>*3,00* | 15,0<br>*3,13* | 13,2<br>*3,21* | 11,3<br>*3,28* | 9,2<br>*3,31* | |
| **50-125A** | 4 | 112M | 23,7<br>*1,50* | 24,3<br>*2,02* | 24,3<br>*2,19* | 24,2<br>*2,35* | 24,1<br>*2,51* | 23,9<br>*2,66* | 23,7<br>*2,81* | 23,3<br>*2,94* | 23,0<br>*3,07* | 22,6<br>*3,21* | 22,1<br>*3,34* | 21,7<br>*3,47* | 21,2<br>*3,59* | 20,7<br>*3,69* | 19,6<br>*3,88* | 18,2<br>*4,03* | 16,4<br>*4,15* | 14,2<br>*4,23* | |
| **50-160B** | 5,5 | 132S | 32,1<br>*1,92* | | | | 33,5<br>*3,60* | 33,4<br>*3,84* | 33,1<br>*4,06* | 32,7<br>*4,28* | 32,2<br>*4,48* | 31,6<br>*4,67* | 31,0<br>*4,84* | 30,2<br>*4,99* | 29,1<br>*5,12* | 28,3<br>*5,24* | 26,2<br>*5,45* | 23,9<br>*5,60* | 21,5<br>*5,70* | 18,9<br>*5,75* | |
| **50-160A** | 7,5 | 132S | 38,1<br>*2,49* | | | | 39,8<br>*4,44* | 39,8<br>*4,74* | 39,7<br>*5,03* | 39,5<br>*5,30* | 39,2<br>*5,56* | 38,8<br>*5,79* | 38,3<br>*6,00* | 37,7<br>*6,21* | 36,9<br>*6,21* | 36,0<br>*6,60* | 34,2<br>*6,93* | 32,2<br>*7,20* | 29,7<br>*7,45* | 27,4<br>*7,66* | 25,4<br>*7,95* |
| **50-200C** | 11 | 160M | 48,2<br>*3,13* | | | | | 49,7<br>*6,11* | 49,2<br>*6,44* | 48,5<br>*6,75* | 47,7<br>*7,06* | 46,9<br>*7,35* | 45,9<br>*7,62* | 44,9<br>*7,88* | 43,7<br>*8,11* | 42,6<br>*8,31* | 40,0<br>*8,67* | 36,0<br>*9,02* | 32,3<br>*9,26* | 28,9<br>*9,43* | |
| **50-200B** | 11 | 160M | 53,1<br>*3,44* | | | | | 54,6<br>*6,75* | 54,1<br>*7,14* | 53,5<br>*7,52* | 52,9<br>*7,86* | 52,2<br>*8,17* | 51,4<br>*8,47* | 50,4<br>*8,78* | 49,3<br>*9,09* | 48,1<br>*9,34* | 45,5<br>*9,76* | 42,7<br>*10,15* | 38,8<br>*10,47* | 35,0<br>*10,73* | |
| **50-200A** | 15 | 160M | 59,9<br>*4,38* | | | | | 61,8<br>*7,92* | 61,5<br>*8,36* | 61,0<br>*8,78* | 60,4<br>*9,20* | 59,7<br>*9,62* | 58,8<br>*10,02* | 58,0<br>*10,38* | 57,1<br>*10,73* | 56,0<br>*11,05* | 53,6<br>*11,65* | 50,8<br>*12,17* | 47,8<br>*12,62* | 44,4<br>*13,01* | 39,8<br>*13,35* |
| **50-250C** | 15 | 160M | 69,2<br>*5,27* | | | | | | 68,2<br>*10,08* | 67,7<br>*10,60* | 67,0<br>*11,11* | 66,3<br>*11,60* | 65,6<br>*12,07* | 64,7<br>*12,52* | 63,8<br>*12,94* | 62,8<br>*13,33* | 59,9<br>*14,14* | 56,2<br>*14,94* | 52,1<br>*15,59* | | |
| **50-250B** | 18,5 | 160L | 78,8<br>*6,33* | | | | | | 78,4<br>*11,72* | 78,0<br>*12,33* | 77,6<br>*12,92* | 77,0<br>*13,49* | 76,1<br>*14,03* | 75,1<br>*14,55* | 74,0<br>*15,06* | 72,9<br>*15,53* | 70,3<br>*16,44* | 66,9<br>*17,34* | 62,9<br>*18,18* | 58,5<br>*18,96* | |
| **50-250A** | 22 | 180M | 88,5<br>*7,43* | | | | | | 88,3<br>*13,20* | 88,1<br>*13,87* | 87,7<br>*14,55* | 87,2<br>*15,22* | 86,6<br>*15,88* | 85,8<br>*16,51* | 84,8<br>*17,13* | 83,8<br>*17,74* | 81,4<br>*18,90* | 78,5<br>*19,99* | 75,0<br>*21,00* | 70,2<br>*21,94* | 64,8<br>*22,82* |

| TYPE - 50 Hz | P2 | Motor Size | Q (m³/h - l/min) | | | | | | | | | | | | | | | |
|---|---|---|---|---|---|---|---|---|---|---|---|---|---|---|---|---|---|---|
| | | | 0 | 42 | 45 | 48 | 54 | 60 | 66 | 72 | 78 | 84 | 96 | 108 | 120 | 132 | 138 | 144 |
| | | | 0 | 700 | 750 | 800 | 900 | 1000 | 1100 | 1200 | 1300 | 1400 | 1600 | 1800 | 2000 | 2200 | 2300 | 2400 |
| | kW | | H (m)<br>*pump input power (kW)* | | | | | | | | | | | | | | | |
| **50-315DN**<br>No EN 733;<br>no CAT, CAX, CATX | 37 | 200L | 87,8<br>*11,19* | 90,4<br>*20,11* | 90,3<br>*20,81* | 90,2<br>*21,52* | 89,9<br>*22,91* | 89,2<br>*24,19* | 88,2<br>*25,41* | 87,1<br>*26,58* | 86,0<br>*27,71* | 84,8<br>*28,81* | 82,4<br>*30,91* | 79,9<br>*32,92* | 76,9<br>*34,81* | 73,4<br>*36,56* | | |
| **50-315CN**<br>No EN 733;<br>no CAT, CAX, CATX | 45 | 225M | 101,8<br>*13,32* | 105,0<br>*23,97* | 104,9<br>*24,79* | 104,8<br>*25,63* | 104,3<br>*27,25* | 103,7<br>*28,77* | 102,7<br>*30,21* | 101,5<br>*31,55* | 100,3<br>*32,85* | 99,1<br>*34,15* | 96,7<br>*36,68* | 94,1<br>*39,06* | 91,3<br>*41,26* | 88,7<br>*43,26* | | |
| **50-315BN**<br>No EN 733;<br>no CAT, CAX, CATX | 55 | 250M | 122,3<br>*17,44* | 124,3<br>*29,30* | 124,4<br>*30,29* | 124,5<br>*31,30* | 124,7<br>*33,28* | 124,4<br>*35,10* | 123,6<br>*36,80* | 122,5<br>*38,35* | 121,3<br>*39,85* | 119,9<br>*41,39* | 116,6<br>*44,41* | 113,3<br>*47,32* | 110,1<br>*50,01* | 107,1<br>*52,39* | 105,4<br>*53,60* | 103,5<br>*54,83* |
| **50-315AN**<br>No EN 733;<br>no CAT, CAX, CATX | 75 | 280S | 146,1<br>*22,75* | 146,9<br>*35,89* | 147,1<br>*37,03* | 147,3<br>*38,21* | 147,4<br>*40,53* | 147,3<br>*42,66* | 146,9<br>*44,71* | 146,3<br>*46,72* | 145,3<br>*48,67* | 144,1<br>*50,59* | 141,2<br>*54,26* | 137,9<br>*57,67* | 134,1<br>*60,84* | 130,0<br>*63,78* | 127,9<br>*65,11* | 125,8<br>*66,34* |

| TYPE - 50 Hz | P2 | Motor Size | Q (m³/h - l/min) | | | | | | | | | | | | | | | | | | | | |
|---|---|---|---|---|---|---|---|---|---|---|---|---|---|---|---|---|---|---|---|---|---|---|---|
| | | | 0 | 30 | 33 | 36 | 39 | 42 | 45 | 48 | 54 | 60 | 66 | 72 | 78 | 84 | 96 | 108 | 120 | 132 | 138 | 144 | 150 |
| | | | 0 | 500 | 550 | 600 | 650 | 700 | 750 | 800 | 900 | 1000 | 1100 | 1200 | 1300 | 1400 | 1600 | 1800 | 2000 | 2200 | 2300 | 2400 | 2500 |
| | kW | | H (m)<br>*pump input power (kW)* | | | | | | | | | | | | | | | | | | | | |
| **65-125B** | 5,5 | 132S | 19,7<br>*2,07* | 20,6<br>*3,36* | 20,5<br>*3,49* | 20,4<br>*3,62* | 20,4<br>*3,75* | 20,3<br>*3,87* | 20,2<br>*3,99* | 20,2<br>*4,11* | 20,0<br>*4,34* | 19,7<br>*4,54* | 19,3<br>*4,71* | 18,8<br>*4,87* | 18,2<br>*5,03* | 17,5<br>*5,17* | 16,3<br>*5,45* | 15,0<br>*5,67* | 13,1<br>*5,84* | | | | |
| **65-125A** | 7,5 | 132S | 24,6<br>*2,95* | 25,2<br>*4,37* | 25,2<br>*4,52* | 25,1<br>*4,68* | 25,1<br>*4,83* | 25,0<br>*4,98* | 24,9<br>*5,13* | 24,9<br>*5,29* | 24,7<br>*5,60* | 24,5<br>*5,89* | 24,2<br>*6,16* | 23,9<br>*6,41* | 23,5<br>*6,65* | 23,0<br>*6,86* | 22,0<br>*7,25* | 20,6<br>*7,55* | 18,8<br>*7,77* | 16,8<br>*7,93* | | | |
| **65-160C** | 11 | 160M | 28,9<br>*2,67* | | | | | 30,6<br>*5,52* | 30,5<br>*5,71* | 30,3<br>*5,90* | 30,0<br>*6,26* | 29,6<br>*6,60* | 29,1<br>*6,93* | 28,5<br>*7,23* | 27,9<br>*7,51* | 27,2<br>*7,77* | 25,3<br>*8,26* | 22,9<br>*8,64* | 20,2<br>*8,92* | 17,5<br>*9,11* | 16,0<br>*9,17* | 13,9<br>*9,19* | |
| **65-160B** | 11 | 160M | 33,2<br>*3,37* | | | | | 35,1<br>*6,51* | 35,0<br>*6,74* | 34,9<br>*6,95* | 34,6<br>*7,37* | 34,3<br>*7,77* | 33,8<br>*8,17* | 33,3<br>*8,56* | 32,8<br>*8,91* | 32,1<br>*9,24* | 30,4<br>*9,85* | 28,2<br>*10,38* | 25,5<br>*10,82* | 22,5<br>*11,17* | 21,4<br>*11,34* | 20,4<br>*11,49* | |
| **65-160A** | 15 | 160M | 40,1<br>*4,54* | | | | | 42,5<br>*8,31* | 42,5<br>*8,59* | 42,5<br>*8,86* | 42,3<br>*9,37* | 42,1<br>*9,86* | 41,8<br>*10,35* | 41,4<br>*10,85* | 41,0<br>*11,32* | 40,4<br>*11,77* | 38,9<br>*12,65* | 37,1<br>*13,46* | 35,3<br>*14,14* | 32,8<br>*14,79* | 31,7<br>*15,14* | 30,9<br>*15,52* | |
| **65-200C** | 15 | 160M | 44,4<br>*4,38* | | | | | | | | 46,1<br>*10,30* | 45,4<br>*10,87* | 44,7<br>*11,44* | 44,0<br>*12,00* | 43,2<br>*12,52* | 42,4<br>*12,98* | 40,3<br>*13,76* | 37,5<br>*14,36* | 33,7<br>*14,89* | 28,9<br>*15,27* | 26,8<br>*15,43* | | |
| **65-200B** | 18,5 | 160L | 51,7<br>*5,71* | | | | | | | | 53,9<br>*12,58* | 53,4<br>*13,25* | 52,7<br>*13,89* | 52,0<br>*14,51* | 51,3<br>*15,12* | 50,4<br>*15,66* | 48,6<br>*16,56* | 45,9<br>*17,56* | 43,0<br>*18,37* | 39,4<br>*18,96* | 37,1<br>*19,20* | 34,6<br>*19,42* | |
| **65-200A** | 22 | 180M | 60,3<br>*7,25* | | | | | | | | 61,8<br>*14,56* | 61,4<br>*15,38* | 61,0<br>*16,18* | 60,4<br>*16,93* | 59,8<br>*17,64* | 59,1<br>*18,33* | 57,1<br>*19,66* | 54,6<br>*20,84* | 51,6<br>*21,83* | 48,3<br>*22,73* | 46,5<br>*23,10* | 44,4<br>*23,41* | |
| **65-250B** | 30 | 200L | 80,6<br>*9,16* | | | | | | | | 80,6<br>*19,79* | 79,5<br>*20,77* | 78,4<br>*21,74* | 77,1<br>*22,72* | 75,7<br>*23,63* | 74,1<br>*24,37* | 70,4<br>*25,59* | 66,1<br>*26,73* | 61,0<br>*27,55* | 54,7<br>*28,09* | 51,0<br>*28,27* | 47,3<br>*28,38* | |
| **65-250A** | 37 | 200L | 91,6<br>*11,32* | | | | | | | | 91,6<br>*23,01* | 90,8<br>*24,18* | 89,8<br>*25,33* | 88,6<br>*26,47* | 87,4<br>*27,58* | 85,9<br>*28,55* | 82,5<br>*30,14* | 77,8<br>*31,64* | 72,8<br>*32,77* | 67,4<br>*33,54* | 64,3<br>*33,85* | 60,8<br>*34,09* | 57,9<br>*34,25* |

| TYPE - 50 Hz | P2 | Motor Size | Q (m³/h - l/min) | | | | | | | | | | | | | | | | | | |
|---|---|---|---|---|---|---|---|---|---|---|---|---|---|---|---|---|---|---|---|---|---|
| | | | 0 | 54 | 60 | 66 | 72 | 78 | 84 | 96 | 108 | 120 | 132 | 138 | 144 | 150 | 156 | 168 | 180 | 195 | 210 |
| | | | 0 | 900 | 1000 | 1100 | 1200 | 1300 | 1400 | 1600 | 1800 | 2000 | 2200 | 2300 | 2400 | 2500 | 2600 | 2800 | 3000 | 3250 | 3500 |
| | kW | | H (m)<br>*pump input power (kW)* | | | | | | | | | | | | | | | | | | |
| **65-315CN**<br>No CAT, CAX, CATX | 55 | 250M | 93,9<br>*15,58* | 96,5<br>*26,64* | 96,4<br>*27,96* | 96,3<br>*29,26* | 96,0<br>*30,48* | 95,6<br>*31,67* | 95,1<br>*32,88* | 93,8<br>*35,28* | 92,3<br>*37,55* | 90,7<br>*39,76* | 89,1<br>*41,99* | 88,3<br>*43,09* | 87,5<br>*44,18* | 86,5<br>*45,24* | 85,5<br>*46,28* | 83,2<br>*48,31* | 80,8<br>*50,27* | | |
| **65-315BN**<br>No CAT, CAX, CATX | 75 | 280S | 116,5<br>*21,16* | 117,9<br>*34,28* | 117,8<br>*35,82* | 117,7<br>*37,35* | 117,4<br>*38,80* | 117,0<br>*40,26* | 116,4<br>*41,84* | 114,9<br>*45,05* | 113,3<br>*47,88* | 111,4<br>*50,51* | 109,4<br>*53,05* | 108,3<br>*54,27* | 107,2<br>*55,48* | 106,0<br>*56,64* | 104,9<br>*57,76* | 102,5<br>*59,94* | 99,9<br>*62,26* | 96,3<br>*65,43* | |
| **65-315AN**<br>No CAT, CAX, CATX | 90 | 280M | 138,2<br>*26,69* | 138,8<br>*43,17* | 138,5<br>*45,02* | 138,1<br>*46,88* | 137,6<br>*48,78* | 137,0<br>*50,67* | 136,4<br>*52,51* | 135,0<br>*56,09* | 133,5<br>*59,51* | 131,7<br>*62,82* | 129,5<br>*66,08* | 128,3<br>*67,67* | 127,0<br>*69,20* | 125,8<br>*70,68* | 124,5<br>*72,10* | 121,8<br>*74,81* | 118,8<br>*77,32* | 114,8<br>*80,16* | 110,4<br>*83,11* |

| TYPE - 50 Hz | P2 | Motor Size | Q (m³/h - l/min) | | | | | | | | | | | | | | | | | | |
|---|---|---|---|---|---|---|---|---|---|---|---|---|---|---|---|---|---|---|---|---|---|
| | | | 0 | 66 | 72 | 78 | 84 | 96 | 108 | 120 | 132 | 138 | 144 | 156 | 168 | 180 | 195 | 210 | 225 | 240 | |
| | | | 0 | 1100 | 1200 | 1300 | 1400 | 1600 | 1800 | 2000 | 2200 | 2300 | 2400 | 2600 | 2800 | 3000 | 3250 | 3500 | 3750 | 4000 | |
| | kW | | H (m)<br>*pump input power (kW)* | | | | | | | | | | | | | | | | | | |
| **80-160E** | 11 | 160M | 21,5<br>*3,48* | 22,9<br>*6,43* | 22,5<br>*6,65* | 22,1<br>*6,86* | 21,6<br>*7,07* | 20,8<br>*7,45* | 19,9<br>*7,76* | 18,9<br>*8,05* | 17,7<br>*8,38* | 17,2<br>*8,52* | 16,6<br>*8,65* | 15,3<br>*8,84* | 13,7<br>*8,88* | | | | | | |
| **80-160D** | 11 | 160M | 25,4<br>*4,16* | 27,3<br>*7,74* | 27,0<br>*8,01* | 26,6<br>*8,27* | 26,3<br>*8,53* | 25,4<br>*9,03* | 24,5<br>*9,46* | 23,5<br>*9,79* | 22,4<br>*10,14* | 21,8<br>*10,32* | 21,2<br>*10,49* | 19,9<br>*10,76* | 18,3<br>*10,95* | 16,4<br>*11,07* | | | | | |
| **80-160C** | 15 | 160M | 29,0<br>*4,74* | 30,9<br>*8,66* | 30,7<br>*8,98* | 30,4<br>*9,29* | 30,1<br>*9,59* | 29,4<br>*10,22* | 28,5<br>*10,85* | 27,4<br>*11,38* | 26,3<br>*11,85* | 25,8<br>*12,06* | 25,3<br>*12,25* | 24,1<br>*12,59* | 22,5<br>*12,85* | 20,7<br>*13,05* | 18,4<br>*13,21* | | | | |
| **80-160B** | 18,5 | 160L | 33,6<br>*6,28* | 35,9<br>*10,61* | 35,7<br>*10,94* | 35,4<br>*11,25* | 35,2<br>*11,57* | 34,5<br>*12,25* | 33,7<br>*12,99* | 32,9<br>*13,69* | 32,0<br>*14,33* | 31,6<br>*14,62* | 31,1<br>*14,90* | 30,0<br>*15,38* | 28,6<br>*15,75* | 27,0<br>*16,04* | 24,5<br>*16,35* | 22,0<br>*16,57* | | | |
| **80-160A** | 22,5 | 180M | 38,0<br>*6,82* | 40,5<br>*12,04* | 40,4<br>*12,50* | 40,2<br>*12,96* | 40,1<br>*13,42* | 39,6<br>*14,34* | 39,1<br>*15,23* | 38,4<br>*16,05* | 37,5<br>*16,81* | 37,1<br>*17,19* | 36,6<br>*17,57* | 35,4<br>*18,29* | 34,1<br>*18,86* | 32,6<br>*19,34* | 30,4<br>*19,84* | 28,3<br>*20,38* | 23,9<br>*20,28* | | |
| **80-200B** | 30 | 200L | 50,4<br>*8,89* | | | | 54,5<br>*18,00* | 53,9<br>*19,22* | 53,2<br>*20,56* | 52,3<br>*22,05* | 51,3<br>*23,32* | 50,7<br>*23,79* | 50,2<br>*24,21* | 48,9<br>*25,06* | 47,4<br>*26,03* | 45,8<br>*26,97* | 43,4<br>*27,97* | 40,9<br>*28,81* | 38,5<br>*29,48* | | |
| **80-200A** | 37 | 200L | 57,3<br>*10,32* | | | | 61,7<br>*21,15* | 61,3<br>*22,80* | 60,6<br>*24,43* | 59,4<br>*26,13* | 58,2<br>*27,62* | 57,8<br>*28,17* | 57,5<br>*28,57* | 56,8<br>*29,28* | 55,4<br>*30,39* | 53,7<br>*31,67* | 51,5<br>*32,98* | 49,1<br>*34,05* | 46,6<br>*34,94* | 43,9<br>*35,68* | |
| **80-250B** | 45 | 225M | 77,2<br>*14,01* | | | | | 80,0<br>*30,93* | 79,0<br>*32,60* | 77,5<br>*34,34* | 75,3<br>*36,13* | 74,2<br>*37,02* | 73,1<br>*37,86* | 71,0<br>*39,38* | 69,0<br>*40,78* | 67,0<br>*42,10* | 64,5<br>*43,60* | 61,8<br>*44,94* | 58,8<br>*46,15* | | |
| **80-250A** | 55 | 250M | 90,0<br>*16,74* | | | | | 92,8<br>*36,56* | 91,1<br>*38,57* | 89,3<br>*40,54* | 87,4<br>*42,46* | 86,4<br>*43,39* | 85,4<br>*44,31* | 83,1<br>*46,12* | 80,7<br>*47,81* | 78,5<br>*49,29* | 75,7<br>*50,92* | 72,4<br>*52,59* | 68,8<br>*54,18* | 65,2<br>*55,50* | |

| TYPE - 50 Hz | P2 | Motor Size | Q (m³/h - l/min) | | | | | | | | | | | | | | | | | |
|---|---|---|---|---|---|---|---|---|---|---|---|---|---|---|---|---|---|---|---|---|
| | | | 0 | 78 | 84 | 96 | 108 | 120 | 132 | 138 | 144 | 156 | 168 | 180 | 195 | 210 | 225 | 240 | 255 | |
| | | | 0 | 1300 | 1400 | 1600 | 1800 | 2000 | 2200 | 2300 | 2400 | 2600 | 2800 | 3000 | 3250 | 3500 | 3750 | 4000 | 4250 | |
| | kW | | H (m)<br>*pump input power (kW)* | | | | | | | | | | | | | | | | | |
| **80-315BN**<br>No CAT, CAX, CATX | 90 | 280M | 108,0<br>*21,85* | 112,4<br>*42,35* | 112,4<br>*44,06* | 112,2<br>*47,49* | 111,7<br>*50,86* | 111,1<br>*54,13* | 110,2<br>*57,25* | 109,7<br>*58,76* | 109,1<br>*60,24* | 107,9<br>*63,14* | 106,4<br>*65,95* | 104,9<br>*68,72* | 102,7<br>*72,14* | 100,4<br>*75,60* | 98,3<br>*78,97* | 95,7<br>*82,15* | 90,8<br>*85,17* | |
| **80-315AN**<br>No CAT, CAX, CATX | 110 | 315S | 140,5<br>*31,92* | 141,4<br>*55,48* | 141,1<br>*57,36* | 140,2<br>*61,13* | 139,2<br>*64,91* | 138,1<br>*68,78* | 136,9<br>*72,88* | 136,2<br>*74,96* | 135,5<br>*76,96* | 134,1<br>*80,84* | 132,5<br>*84,36* | 131,0<br>*87,02* | 128,7<br>*90,23* | 125,8<br>*94,76* | 122,5<br>*99,35* | 121,7<br>*103,04* | 118,5<br>*106,15* | |

| TYPE - 50 Hz | P2 | Motor Size | Q (m³/h - l/min) | | | | | | | | | | | | | | | | | |
|---|---|---|---|---|---|---|---|---|---|---|---|---|---|---|---|---|---|---|---|---|
| | | | 0 | 108 | 120 | 132 | 138 | 144 | 156 | 168 | 180 | 195 | 210 | 225 | 240 | 255 | 270 | 300 | 330 | 360 |
| | | | 0 | 1800 | 2000 | 2200 | 2300 | 2400 | 2600 | 2800 | 3000 | 3250 | 3500 | 3750 | 4000 | 4250 | 4500 | 5000 | 5500 | 6000 |
| | kW | | H (m)<br>*pump input power (kW)* | | | | | | | | | | | | | | | | | |
| **100-200D** | 30 | 200L | 44,1<br>*17,69* | 43,3<br>*21,82* | 42,9<br>*22,56* | 42,3<br>*23,28* | 42,0<br>*23,62* | 41,6<br>*23,94* | 40,8<br>*24,53* | 39,9<br>*25,08* | 39,0<br>*25,65* | 37,9<br>*26,39* | 36,8<br>*27,08* | 35,4<br>*27,68* | 33,8<br>*28,21* | 32,3<br>*28,71* | 30,6<br>*29,16* | 26,3<br>*29,70* | | |
| **100-200C** | 37 | 200L | 48,5<br>*19,89* | 48,4<br>*24,72* | 48,0<br>*25,53* | 47,6<br>*26,31* | 47,3<br>*26,70* | 47,0<br>*27,09* | 46,3<br>*27,87* | 45,4<br>*28,66* | 44,6<br>*29,43* | 43,6<br>*30,38* | 42,5<br>*31,30* | 41,2<br>*32,12* | 39,5<br>*32,85* | 37,8<br>*33,51* | 36,2<br>*34,11* | 32,7<br>*35,06* | 28,1<br>*35,64* | |
| **100-200B** | 45 | 225M | 56,1<br>*21,75* | 56,8<br>*28,84* | 56,5<br>*29,78* | 56,1<br>*30,74* | 55,9<br>*31,24* | 55,6<br>*31,75* | 55,1<br>*32,81* | 54,5<br>*33,89* | 53,9<br>*35,04* | 53,1<br>*36,50* | 52,2<br>*37,82* | 51,4<br>*38,89* | 50,4<br>*39,85* | 49,0<br>*40,77* | 47,5<br>*41,60* | 43,8<br>*42,92* | 39,7<br>*43,82* | |
| **100-200A** | 55 | 250M | 61,1<br>*24,57* | 62,2<br>*33,04* | 61,8<br>*34,07* | 61,5<br>*35,11* | 61,2<br>*35,64* | 61,0<br>*36,18* | 60,5<br>*37,28* | 59,9<br>*38,39* | 59,5<br>*39,49* | 58,9<br>*40,86* | 58,3<br>*42,23* | 57,4<br>*43,60* | 56,4<br>*44,97* | 55,2<br>*46,20* | 53,8<br>*47,28* | 50,6<br>*49,05* | 46,8<br>*50,53* | 42,5<br>*51,62* |
| **100-250C** | 55<br>75 | 250M<br>280S | 71,9<br>*24,75* | | 73,2<br>*40,12* | 73,1<br>*41,93* | 73,0<br>*42,84* | 72,9<br>*43,70* | 72,6<br>*45,28* | 72,2<br>*46,77* | 71,8<br>*48,21* | 71,1<br>*49,94* | 70,3<br>*51,65* | 69,3<br>*53,38* | 67,9<br>*55,05* | 66,4<br>*56,66* | 64,7<br>*58,19* | 61,0<br>*60,99* | | |
| **100-250B** | 75 | 280S | 83,6<br>*29,69* | | 83,7<br>*47,10* | 83,5<br>*49,06* | 83,4<br>*50,04* | 83,2<br>*51,01* | 82,9<br>*52,92* | 82,5<br>*54,76* | 82,1<br>*56,47* | 81,4<br>*58,46* | 80,8<br>*60,26* | 80,0<br>*61,86* | 79,0<br>*63,49* | 77,9<br>*65,17* | 76,4<br>*66,93* | 72,0<br>*70,91* | 67,6<br>*73,78* | |
| **100-250A** | 90 | 280M | 93,5<br>*32,71* | | 93,9<br>*51,99* | 93,7<br>*54,14* | 93,5<br>*55,23* | 93,4<br>*56,31* | 92,9<br>*58,48* | 92,4<br>*60,60* | 91,8<br>*62,57* | 90,9<br>*64,88* | 89,9<br>*66,97* | 88,8<br>*68,84* | 87,4<br>*70,81* | 85,7<br>*72,81* | 84,0<br>*74,73* | 80,4<br>*78,17* | 75,8<br>*81,33* | 70,8<br>*84,50* |

# 4CA-4CAX

## Centrifugal Flanged EN 733

| TYPE - 50 Hz | P2 | Motor Size | Q (m³/h - l/min) | | | | | | | | | | |
|---|---|---|---|---|---|---|---|---|---|---|---|---|---|
| | | | 0 | 3 | 6 | 9 | 12 | 13,5 | 15 | 18 | 19 | 20 | 21 |
| | | | 0 | 50 | 100 | 150 | 200 | 225 | 250 | 300 | 316,7 | 333,3 | 350 |
| | kW | | H (m) / pump input power (kW) | | | | | | | | | | |
| **32-160C** | 0,37 | 71B | 5,7 / 0,10 | 5,6 / 0,15 | 5,1 / 0,19 | 4,0 / 0,22 | 2,4 / 0,24 | | | | | | |
| **32-160B** | 0,37 | 71B | 6,8 / 0,12 | 6,7 / 0,17 | 6,3 / 0,22 | 5,4 / 0,26 | 3,8 / 0,29 | | | | | | |
| **32-160A** | 0,55 | 80A | 9,0 / 0,18 | 9,0 / 0,24 | 8,7 / 0,30 | 8,0 / 0,36 | 6,6 / 0,41 | 5,6 / 0,40 | | | | | |
| **32-200C** | 0,75 | 80B | 10,1 / 0,25 | 9,9 / 0,32 | 9,6 / 0,41 | 8,8 / 0,48 | 7,4 / 0,54 | 6,4 / 0,57 | 5,3 / 0,60 | 2,6 / 0,65 | | | |
| **32-200B** | 1,1 | 90S | 12,0 / 0,34 | 12,0 / 0,42 | 11,8 / 0,52 | 11,1 / 0,63 | 10,1 / 0,72 | 9,4 / 0,76 | 8,5 / 0,80 | 5,9 / 0,85 | 4,8 / 0,90 | | |
| **32-200A** | 1,1 | 90S | 14,7 / 0,39 | 14,7 / 0,51 | 14,5 / 0,63 | 13,6 / 0,74 | 12,3 / 0,84 | 11,4 / 0,89 | 10,4 / 0,93 | 8,0 / 1,00 | 7,0 / 1,02 | 5,8 / 1,04 | |
| **32-250C** | 1,5 | 90L | 17,8 / 0,56 | 17,5 / 0,69 | 17,2 / 0,83 | 16,3 / 0,96 | 14,9 / 1,07 | 14,2 / 1,12 | 13,2 / 1,17 | 10,3 / 1,23 | 9,1 / 1,25 | | |
| **32-250B** | 1,5 | 90L | 20,8 / 0,71 | 20,5 / 0,85 | 20,3 / 1,01 | 19,4 / 1,16 | 18,0 / 1,29 | 17,2 / 1,35 | 16,2 / 1,40 | 14,1 / 1,49 | 13,1 / 1,52 | 11,8 / 1,54 | |
| **32-250A** | 2,2 | 100L | 23,5 / 0,86 | 23,1 / 1,02 | 23,0 / 1,21 | 22,3 / 1,39 | 20,9 / 1,55 | 19,9 / 1,62 | 18,8 / 1,69 | 16,5 / 1,79 | 15,6 / 1,82 | 14,5 / 1,85 | 13,2 / 1,88 |

| TYPE - 50 Hz | P2 | Motor Size | Q (m³/h - l/min) | | | | | | | | | | | |
|---|---|---|---|---|---|---|---|---|---|---|---|---|---|---|
| | | | 0 | 3 | 6 | 9 | 12 | 15 | 18 | 21 | 24 | 27 | 30 | 33 |
| | | | 0 | 50 | 100 | 150 | 200 | 250 | 300 | 350 | 400 | 450 | 500 | 550 |
| | kW | | H (m) / pump input power (kW) | | | | | | | | | | | |
| **40-125C** | 0,37 | 71B | 4,4 / 0,09 | 4,5 / 0,12 | 4,4 / 0,16 | 4,1 / 0,19 | 3,6 / 0,20 | 2,9 / 0,21 | 2,0 / 0,22 | | | | | |
| **40-125B** | 0,37 | 71B | 5,5 / 0,11 | 5,6 / 0,15 | 5,6 / 0,19 | 5,3 / 0,23 | 4,8 / 0,25 | 4,1 / 0,27 | 3,2 / 0,28 | 2,2 / 0,29 | | | | |
| **40-125A** | 0,55 | 80A | 6,4 / 0,14 | 6,5 / 0,19 | 6,5 / 0,23 | 6,2 / 0,27 | 5,7 / 0,31 | 5,0 / 0,33 | 4,1 / 0,35 | 3,1 / 0,36 | 2,3 / 0,36 | | | |
| **40-160B** | 0,55 | 80A | 6,9 / 0,17 | 7,1 / 0,23 | 7,2 / 0,28 | 7,0 / 0,33 | 6,6 / 0,37 | 5,9 / 0,40 | 5,1 / 0,43 | 4,0 / 0,44 | 2,8 / 0,45 | | | |
| **40-160A** | 0,75 | 80A | 8,4 / 0,23 | 8,5 / 0,28 | 8,6 / 0,34 | 8,4 / 0,40 | 7,9 / 0,46 | 7,3 / 0,50 | 6,5 / 0,53 | 5,6 / 0,55 | 4,6 / 0,57 | | | |
| **40-160AP** | 0,75 | 80A | 9,3 / 0,26 | 9,5 / 0,31 | 9,5 / 0,38 | 9,3 / 0,45 | 8,9 / 0,51 | 8,3 / 0,56 | 7,5 / 0,60 | 6,6 / 0,63 | 5,6 / 0,65 | | | |
| **40-200B** | 0,75 | 90S | 11,0 / 0,30 | 11,0 / 0,37 | 11,0 / 0,46 | 10,7 / 0,54 | 10,1 / 0,60 | 9,3 / 0,66 | 8,0 / 0,71 | 6,5 / 0,75 | 5,0 / 0,78 | | | |
| **40-200A** | 1,1 | 90S | 13,9 / 0,43 | 13,9 / 0,51 | 13,9 / 0,61 | 13,7 / 0,72 | 13,3 / 0,81 | 12,6 / 0,90 | 11,5 / 0,97 | 10,1 / 1,02 | 8,5 / 1,07 | | | |
| **40-200AP** | 1,1 | 90L | 14,9 / 0,44 | 14,8 / 0,52 | 14,7 / 0,63 | 14,5 / 0,74 | 13,9 / 0,84 | 13,1 / 0,93 | 12,0 / 1,00 | 10,6 / 1,05 | 8,8 / 1,10 | | | |
| **40-250C** | 1,5 | 90L | 15,7 / 0,54 | 15,9 / 0,65 | 15,8 / 0,78 | 15,4 / 0,90 | 14,9 / 1,03 | 13,8 / 1,14 | 12,1 / 1,24 | 10,2 / 1,35 | 7,8 / 1,43 | 5,0 / 1,51 | | |
| **40-250B** | 2,2 | 100L | 18,2 / 0,69 | 18,4 / 0,81 | 18,3 / 0,95 | 18,0 / 1,10 | 17,6 / 1,25 | 16,8 / 1,39 | 15,4 / 1,51 | 13,4 / 1,64 | 11,1 / 1,75 | 8,5 / 1,85 | 5,2 / 1,95 | |
| **40-250A** | 2,2 | 100L | 20,5 / 0,82 | 20,8 / 0,95 | 20,9 / 1,11 | 20,5 / 1,28 | 20,0 / 1,45 | 19,4 / 1,61 | 18,3 / 1,75 | 16,2 / 1,89 | 14,0 / 2,01 | 11,4 / 2,14 | 8,5 / 2,24 | 5,4 / 2,35 |
| **40-250BM** | 3 | 100L | 22,5 / 0,92 | 22,7 / 1,06 | 22,6 / 1,23 | 22,5 / 1,41 | 22,2 / 1,60 | 21,6 / 1,77 | 20,5 / 1,92 | 18,6 / 2,06 | 16,3 / 2,19 | 13,9 / 2,32 | 11,3 / 2,44 | 8,0 / 2,55 |
| **40-250AM** | 3 | 100L | 24,6 / 1,09 | 24,5 / 1,23 | 24,4 / 1,40 | 24,3 / 1,59 | 24,0 / 1,79 | 23,5 / 1,97 | 22,5 / 2,13 | 20,9 / 2,29 | 18,7 / 2,44 | 16,4 / 2,57 | 13,8 / 2,70 | 11,3 / 2,82 |

| TYPE - 50 Hz | P2 | Motor Size | Q (m³/h - l/min) | | | | | | | | | | | | | | | |
|---|---|---|---|---|---|---|---|---|---|---|---|---|---|---|---|---|---|---|
| | | | 0 | 9 | 12 | 15 | 18 | 21 | 24 | 27 | 30 | 33 | 36 | 39 | 42 | 45 | 48 | 52 |
| | | | 0 | 150 | 200 | 250 | 300 | 350 | 400 | 450 | 500 | 550 | 600 | 650 | 700 | 750 | 800 | 866,7 |
| | kW | | H (m) / pump input power (kW) | | | | | | | | | | | | | | | |
| **50-125B** | 0,55 | 80A | 4,9 / 0,17 | 5,1 / 0,25 | 5,0 / 0,29 | 4,9 / 0,32 | 4,8 / 0,35 | 4,6 / 0,38 | 4,3 / 0,40 | 4,0 / 0,42 | 3,6 / 0,43 | 3,1 / 0,44 | 2,7 / 0,45 | 2,2 / 0,45 | 1,6 / 0,44 | | | |
| **50-125A** | 0,75 | 80B | 5,9 / 0,20 | 6,1 / 0,31 | 6,0 / 0,35 | 6,0 / 0,39 | 5,8 / 0,43 | 5,7 / 0,46 | 5,4 / 0,49 | 5,1 / 0,52 | 4,7 / 0,54 | 4,3 / 0,56 | 3,8 / 0,57 | 3,2 / 0,57 | 2,7 / 0,58 | 2,1 / 0,58 | | |
| **50-160B** | 0,75 | 80B | 7,7 / 0,27 | 7,8 / 0,43 | 7,8 / 0,49 | 7,6 / 0,54 | 7,4 / 0,59 | 7,0 / 0,62 | 6,6 / 0,65 | 6,0 / 0,68 | 5,4 / 0,70 | 4,8 / 0,71 | 4,1 / 0,71 | 3,4 / 0,71 | 2,6 / 0,71 | | | |
| **50-160A** | 1,1 | 90S | 9,3 / 0,36 | 9,5 / 0,54 | 9,6 / 0,62 | 9,5 / 0,69 | 9,4 / 0,75 | 9,1 / 0,81 | 8,7 / 0,86 | 8,2 / 0,90 | 7,7 / 0,93 | 7,2 / 0,96 | 6,6 / 0,98 | 5,9 / 1,00 | 5,2 / 1,01 | 4,3 / 1,02 | 3,4 / 1,01 | |
| **50-200C** | 1,1 | 90S | 11,7 / 0,40 | 12,1 / 0,66 | 11,9 / 0,75 | 11,7 / 0,83 | 11,2 / 0,90 | 10,7 / 0,96 | 10,1 / 1,01 | 9,3 / 1,06 | 8,3 / 1,10 | 7,2 / 1,12 | 6,0 / 1,14 | 4,9 / 1,15 | 3,7 / 1,16 | | | |
| **50-200B** | 1,5 | 90L | 13,1 / 0,47 | 13,3 / 0,75 | 13,2 / 0,84 | 12,9 / 0,93 | 12,5 / 1,01 | 12,0 / 1,08 | 11,5 / 1,15 | 10,7 / 1,20 | 9,8 / 1,25 | 8,8 / 1,29 | 7,7 / 1,32 | 6,5 / 1,34 | 5,3 / 1,35 | 3,9 / 1,36 | | |
| **50-200A** | 1,5 | 90L | 14,6 / 0,56 | 14,9 / 0,86 | 14,8 / 0,97 | 14,5 / 1,07 | 14,2 / 1,16 | 13,7 / 1,24 | 13,1 / 1,31 | 12,3 / 1,38 | 11,4 / 1,44 | 10,4 / 1,49 | 9,4 / 1,53 | 8,3 / 1,56 | 7,0 / 1,59 | 5,6 / 1,61 | | |
| **50-250C** | 2,2 | 100L | 17,7 / 0,80 | | 17,4 / 1,32 | 17,1 / 1,45 | 16,8 / 1,57 | 16,3 / 1,68 | 15,8 / 1,79 | 15,1 / 1,89 | 14,2 / 1,97 | 13,2 / 2,05 | 12,0 / 2,13 | 10,8 / 2,20 | 9,4 / 2,26 | 8,0 / 2,32 | | |
| **50-250B** | 3 | 100L | 19,7 / 0,93 | | 19,6 / 1,50 | 19,3 / 1,65 | 19,0 / 1,78 | 18,6 / 1,91 | 18,1 / 2,02 | 17,4 / 2,13 | 16,5 / 2,23 | 15,5 / 2,32 | 14,3 / 2,41 | 13,1 / 2,49 | 11,7 / 2,56 | 10,5 / 2,63 | 8,2 / 2,69 | |
| **50-250A** | 4 | 112M | 21,8 / 1,01 | | 21,4 / 1,59 | 21,2 / 1,74 | 20,9 / 1,90 | 20,6 / 2,05 | 20,0 / 2,18 | 19,4 / 2,30 | 18,5 / 2,41 | 17,4 / 2,51 | 16,2 / 2,61 | 15,0 / 2,70 | 13,8 / 2,78 | 12,4 / 2,86 | 11,0 / 2,93 | 8,2 / 2,98 |

| TYPE - 50 Hz | P2 | Motor Size | Q (m³/h - l/min) | | | | | | | | | | | | | | | | | | | |
|---|---|---|---|---|---|---|---|---|---|---|---|---|---|---|---|---|---|---|---|---|---|---|
| | | | 0 | 18 | 21 | 24 | 27 | 30 | 33 | 36 | 39 | 42 | 45 | 48 | 54 | 60 | 66 | 72 | 78 | 84 | 90 | 96 |
| | | | 0 | 300 | 350 | 400 | 450 | 500 | 550 | 600 | 650 | 700 | 750 | 800 | 900 | 1000 | 1100 | 1200 | 1300 | 1400 | 1500 | 1600 |
| | kW | | H (m) pump input power (kW) | | | | | | | | | | | | | | | | | | | |
| **50-315C** No EN 733 | 5,5 | 132M | 24,4 1,64 | 24,7 2,58 | 24,7 2,77 | 24,6 2,96 | 24,5 3,15 | 24,3 3,33 | 24,0 3,50 | 23,7 3,66 | 23,4 3,82 | 23,1 3,96 | 22,8 4,11 | 22,5 4,24 | 21,9 4,51 | 21,1 4,77 | 20,2 5,01 | 19,2 5,23 | 18,1 5,43 | 16,8 5,62 | | |
| **50-315B** No EN 733 | 7,5 | 132M | 31,3 2,35 | 31,4 3,54 | 31,4 3,78 | 31,3 4,01 | 31,3 4,24 | 31,2 4,47 | 30,9 4,68 | 30,6 4,89 | 30,3 5,08 | 29,9 5,27 | 29,5 5,46 | 29,1 5,64 | 28,2 5,99 | 27,3 6,32 | 26,5 6,61 | 25,5 6,89 | 24,4 7,14 | 23,1 7,37 | 21,6 7,58 | |
| **50-315A** No EN 733 | 11 | 160M | 37,5 3,06 | 37,2 4,39 | 37,2 4,65 | 37,1 4,92 | 37,0 5,18 | 36,9 5,45 | 36,7 5,72 | 36,5 5,97 | 36,3 6,22 | 36,0 6,45 | 35,6 6,68 | 35,2 6,90 | 34,3 7,31 | 33,3 7,69 | 32,1 8,04 | 30,9 8,37 | 29,7 8,69 | 28,4 8,96 | 26,9 9,18 | 25,1 9,37 |

| TYPE - 50 Hz | P2 | Motor Size | Q (m³/h - l/min) | | | | | | | | | | | | | | |
|---|---|---|---|---|---|---|---|---|---|---|---|---|---|---|---|---|---|
| | | | 0 | 18 | 21 | 24 | 27 | 30 | 36 | 42 | 48 | 54 | 60 | 66 | 72 | 78 | 84 | 90 |
| | | | 0 | 300 | 350 | 400 | 450 | 500 | 600 | 700 | 800 | 900 | 1000 | 1100 | 1200 | 1300 | 1400 | 1500 |
| | kW | | H (m) pump input power (kW) | | | | | | | | | | | | | | | |
| **65-125B** | 0,75 | 80M | 4,8 0,28 | 5,0 0,45 | 4,9 0,48 | 4,9 0,51 | 4,8 0,54 | 4,7 0,56 | 4,5 0,60 | 4,2 0,64 | 3,8 0,67 | 3,4 0,69 | 3,0 0,70 | 2,4 0,70 | | | | |
| **65-125A** | 1,1 | 90S | 6,1 0,39 | 6,4 0,61 | 6,3 0,65 | 6,3 0,69 | 6,2 0,73 | 6,1 0,76 | 6,0 0,82 | 5,8 0,88 | 5,5 0,93 | 5,1 0,96 | 4,6 0,99 | 4,0 1,01 | 3,4 1,02 | | | |
| **65-160C** | 1,5 | 90L | 7,1 0,37 | | | 7,3 0,74 | 7,2 0,78 | 7,1 0,83 | 6,9 0,91 | 6,5 0,97 | 6,1 1,02 | 5,6 1,07 | 5,0 1,10 | 4,3 1,12 | 3,5 1,13 | 2,7 1,14 | | |
| **65-160B** | 1,5 | 90L | 8,2 0,45 | | | 8,5 0,88 | 8,4 0,93 | 8,3 0,98 | 8,1 1,07 | 7,8 1,15 | 7,3 1,22 | 6,8 1,28 | 6,1 1,33 | 5,4 1,36 | 4,7 1,39 | 3,9 1,40 | | |
| **65-160A** | 2,2 | 100L | 10,0 0,66 | | | 10,4 1,14 | 10,3 1,21 | 10,3 1,27 | 10,1 1,40 | 9,9 1,51 | 9,6 1,62 | 9,1 1,72 | 8,6 1,81 | 7,9 1,89 | 7,2 1,95 | 6,5 2,00 | 5,7 2,03 | |
| **65-200C** | 2,2 | 100L | 10,9 0,63 | | | | 11,2 1,32 | 11,0 1,39 | 10,7 1,52 | 10,2 1,64 | 9,7 1,73 | 9,0 1,80 | 8,1 1,86 | 7,1 1,91 | 6,1 1,92 | 5,0 1,93 | | |
| **65-200B** | 3 | 100L | 12,7 0,74 | | | | 13,0 1,56 | 12,9 1,64 | 12,5 1,79 | 12,1 1,92 | 11,5 2,03 | 10,9 2,13 | 10,2 2,21 | 9,2 2,27 | 8,1 2,32 | 7,0 2,36 | 5,9 2,39 | |
| **65-200A** | 3 | 100L | 14,7 0,95 | | | | 14,9 1,83 | 14,8 1,92 | 14,4 2,10 | 14,0 2,24 | 13,5 2,37 | 12,8 2,49 | 12,1 2,59 | 11,2 2,68 | 10,2 2,75 | 9,0 2,80 | 7,7 2,84 | 6,4 2,87 |
| **65-250B** | 4 | 112M | 17,7 0,80 | | | | 20,0 2,59 | 19,7 2,74 | 19,0 2,99 | 18,1 3,19 | 17,1 3,35 | 15,9 3,48 | 14,5 3,56 | 12,8 3,61 | 11,0 3,64 | 9,1 3,63 | 7,0 3,58 | |
| **65-250A** | 5,5 | 132S | 22,9 1,44 | | | | | 22,3 3,07 | 21,7 3,34 | 20,9 3,58 | 19,8 3,78 | 18,6 3,94 | 17,3 4,06 | 15,8 4,15 | 14,2 4,21 | 12,3 4,23 | 10,2 4,21 | 7,8 4,17 |

| TYPE - 50 Hz | P2 | Motor Size | Q (m³/h - l/min) | | | | | | | | | | | | | | | | | | | | | | | |
|---|---|---|---|---|---|---|---|---|---|---|---|---|---|---|---|---|---|---|---|---|---|---|---|---|---|---|
| | | | 0 | 27 | 30 | 33 | 36 | 39 | 42 | 45 | 48 | 54 | 60 | 66 | 72 | 78 | 84 | 90 | 96 | 102 | 108 | 114 | 120 | 126 | 132 | 138 |
| | | | 0 | 450 | 500 | 550 | 600 | 650 | 700 | 750 | 800 | 900 | 1000 | 1100 | 1200 | 1300 | 1400 | 1500 | 1600 | 1700 | 1800 | 1900 | 2000 | 2100 | 2200 | 2300 |
| | kW | | H (m) pump input power (kW) | | | | | | | | | | | | | | | | | | | | | | | |
| **65-315CM** | 7,5 | 132M | 23,0 2,05 | 23,5 3,38 | 23,5 3,55 | 23,4 3,70 | 23,3 3,86 | 23,2 4,01 | 23,1 4,16 | 22,9 4,32 | 22,7 4,47 | 22,3 4,77 | 21,9 5,05 | 21,5 5,33 | 21,0 5,59 | 20,5 5,84 | 20,0 6,08 | 19,3 6,32 | 18,5 6,56 | 17,7 6,77 | 16,9 6,97 | 16,0 7,16 | 15,0 7,35 | 13,9 7,52 | | |
| **65-315BM** | 11 | 160M | 28,9 2,72 | 28,9 4,33 | 28,9 4,52 | 28,8 4,70 | 28,7 4,89 | 28,6 5,07 | 28,4 5,24 | 28,2 5,42 | 28,0 5,61 | 27,5 5,98 | 27,0 6,33 | 26,5 6,65 | 25,9 6,95 | 25,3 7,24 | 24,7 7,53 | 24,0 7,80 | 23,3 8,06 | 22,5 8,30 | 21,6 8,52 | 20,6 8,72 | 19,6 8,91 | 18,4 9,10 | 17,2 9,29 | |
| **65-315AM** | 11 | 160M | 34,5 3,44 | 34,0 5,43 | 33,9 5,66 | 33,7 5,88 | 33,5 6,10 | 33,3 6,32 | 33,1 6,54 | 32,9 6,75 | 32,6 6,96 | 32,2 7,35 | 31,6 7,73 | 31,0 8,10 | 30,4 8,45 | 29,6 8,78 | 28,9 9,08 | 28,1 9,35 | 27,2 9,61 | 26,2 9,84 | 25,1 10,05 | 23,8 10,24 | 22,5 10,40 | 21,1 10,55 | 19,6 10,68 | 18,2 10,78 |

| TYPE - 50 Hz | P2 | Motor Size | Q (m³/h - l/min) | | | | | | | | | | | | | | | |
|---|---|---|---|---|---|---|---|---|---|---|---|---|---|---|---|---|---|---|
| | | | 0 | 24 | 27 | 30 | 33 | 36 | 42 | 48 | 60 | 72 | 84 | 96 | 102 | 108 | 120 | 132 | 144 |
| | | | 0 | 400 | 450 | 500 | 550 | 600 | 700 | 800 | 1000 | 1200 | 1400 | 1600 | 1700 | 1800 | 2000 | 2200 | 2400 |
| | kW | | H (m) pump input power (kW) | | | | | | | | | | | | | | | | |
| **80-160E** | 1,1 | 90S | 5,5 0,35 | 5,7 0,71 | 5,7 0,74 | 5,7 0,74 | 5,6 0,78 | 5,4 0,81 | 5,1 0,88 | 4,9 0,90 | 4,2 0,97 | 3,8 1,02 | 2,8 1,02 | 2,2 1,00 | | | | | |
| **80-160D** | 1,5 | 90L | 6,3 0,61 | | 6,8 0,89 | 6,7 0,91 | 6,6 0,95 | 6,5 0,98 | 6,3 1,04 | 6,1 1,10 | 5,5 1,19 | 4,8 1,25 | 4 1,28 | 3,1 1,30 | 2,6 1,29 | | | | |
| **80-160C** | 1,5 | 90L | 7,0 0,67 | | | 7,4 1,04 | 7,3 1,08 | 7,3 1,12 | 7,1 1,18 | 6,8 1,25 | 6,4 1,35 | 5,7 1,42 | 4,9 1,47 | 4 1,48 | 3,5 1,48 | 3,1 1,48 | | | |
| **80-160B** | 2,2 | 100L | 8,5 0,62 | | | | 8,9 1,29 | 8,9 1,35 | 8,7 1,43 | 8,5 1,51 | 8,0 1,72 | 7,5 1,87 | 6,8 1,95 | 5,7 2,01 | 5,2 2,02 | 4,7 2,04 | 3,5 2,04 | | |
| **80-160A** | 3 | 100L | 9,3 1,09 | | | | | 9,8 1,60 | 9,7 1,71 | 9,5 1,81 | 9,1 2,01 | 8,6 2,14 | 7,9 2,27 | 7,1 2,34 | 6,6 2,37 | 6,2 2,39 | 5,0 2,42 | 3,8 2,43 | |
| **80-200B** | 4 | 112M | 12,3 1,25 | | | | | | 13,1 2,32 | 13,0 2,48 | 12,6 2,79 | 12,1 3,03 | 11,4 3,26 | 10,5 3,45 | 10,1 3,52 | 9,6 3,58 | 8,4 3,69 | 7,1 3,75 | |
| **80-200A** | 5,5 | 132S | 13,8 1,40 | | | | | | 14,7 2,64 | 14,6 2,81 | 14,2 3,14 | 13,7 3,43 | 13,1 3,66 | 12,3 3,87 | 11,7 3,99 | 11,2 4,09 | 10,1 4,21 | 8,8 4,30 | 7,5 4,35 |
| **80-250B** | 5,5 | 132S | 18,9 1,79 | | | | | | 19,2 3,52 | 19,0 3,75 | 18,1 4,14 | 17,0 4,48 | 15,9 4,78 | 14,8 5,05 | 14,2 5,16 | 13,6 5,24 | 12,4 5,41 | 11,1 5,54 | |
| **80-250A** | 7,5 | 132M | 22,4 2,22 | | | | | | 22,9 4,28 | 22,6 4,56 | 21,8 5,05 | 20,7 5,46 | 19,6 5,85 | 18,3 6,21 | 17,7 6,37 | 17,0 6,52 | 15,6 6,77 | 14,2 6,96 | 12,6 7,10 |

# 4CA-4CAX ~ *EN 733*

| TYPE - 50 Hz | P2 | Motor Size | Q (m³/h - l/min) | | | | | | | | | | | | | | |
|---|---|---|---|---|---|---|---|---|---|---|---|---|---|---|---|---|---|
| | | | 0 | 42 | 48 | 60 | 72 | 84 | 96 | 102 | 108 | 120 | 132 | 144 | 150 | 156 | 168 |
| | | | 0 | 700 | 800 | 1000 | 1200 | 1400 | 1600 | 1700 | 1800 | 2000 | 2200 | 2400 | 2500 | 2600 | 2800 |
| | kW | | H (m)<br>*pump input power (kW)* | | | | | | | | | | | | | | |
| **80-315B** | 11 | 160M | 27,7<br>*2,99* | 28,3<br>*5,48* | 28,2<br>*5,88* | 27,9<br>*6,67* | 27,2<br>*7,42* | 26,4<br>*8,09* | 25,4<br>*8,67* | 24,9<br>*8,95* | 24,4<br>*9,21* | 23,3<br>*9,74* | 21,9<br>*10,28* | 20,5<br>*10,66* | 19,9<br>*10,85* | | |
| **80-315A** | 15 | 160L | 34,5<br>*4,29* | 35,0<br>*7,30* | 34,9<br>*7,78* | 34,6<br>*8,75* | 34,0<br>*9,66* | 33,3<br>*10,53* | 32,4<br>*11,37* | 31,9<br>*11,77* | 31,3<br>*12,17* | 30,1<br>*12,91* | 28,8<br>*13,50* | 27,3<br>*14,05* | 26,4<br>*14,31* | 25,5<br>*14,56* | 23,7<br>*15,04* |

| TYPE - 50 Hz | P2 | Motor Size | Q (m³/h - l/min) | | | | | | | | | | | | | | | | |
|---|---|---|---|---|---|---|---|---|---|---|---|---|---|---|---|---|---|---|---|
| | | | 0 | 48 | 60 | 72 | 84 | 96 | 102 | 108 | 120 | 132 | 144 | 150 | 156 | 168 | 180 | 192 | 204 |
| | | | 0 | 800 | 1000 | 1200 | 1400 | 1600 | 1700 | 1800 | 2000 | 2200 | 2400 | 2500 | 2600 | 2800 | 3000 | 3200 | 3400 |
| | kW | | H (m)<br>*pump input power (kW)* | | | | | | | | | | | | | | | | |
| **100-200D** | 4 | 112M | 10,9<br>*2,28* | 10,8<br>*2,69* | 10,6<br>*2,88* | 10,3<br>*3,05* | 9,9<br>*3,19* | 9,5<br>*3,34* | 9,2<br>*3,41* | 9,0<br>*3,48* | 8,5<br>*3,58* | 7,8<br>*3,66* | 6,9<br>*3,71* | 6,4<br>*3,72* | 5,9<br>*3,73* | 4,8<br>*3,71* | | | |
| **100-200C** | 5,5 | 132S | 12,0<br>*2,46* | 12,0<br>*2,99* | 11,8<br>*3,20* | 11,5<br>*3,40* | 11,2<br>*3,57* | 10,8<br>*3,76* | 10,6<br>*3,85* | 10,3<br>*3,94* | 9,8<br>*4,06* | 9,1<br>*4,17* | 8,3<br>*4,26* | 7,8<br>*4,28* | 7,4<br>*4,30* | 6,3<br>*4,33* | | | |
| **100-200B** | 5,5 | 132S | 13,5<br>*2,79* | 13,6<br>*3,48* | 13,4<br>*3,70* | 13,1<br>*3,93* | 12,8<br>*4,15* | 12,5<br>*4,38* | 12,3<br>*4,49* | 12,1<br>*4,59* | 11,6<br>*4,77* | 11,0<br>*4,93* | 10,3<br>*5,05* | 9,9<br>*5,09* | 9,5<br>*5,13* | 8,7<br>*5,19* | 7,8<br>*5,23* | | |
| **100-200A** | 7,5 | 132M | 15,2<br>*3,12* | 15,4<br>*3,96* | 15,3<br>*4,22* | 15,0<br>*4,48* | 14,8<br>*4,74* | 14,5<br>*5,03* | 14,4<br>*5,17* | 14,2<br>*5,31* | 13,8<br>*5,58* | 13,2<br>*5,80* | 12,5<br>*5,99* | 12,2<br>*6,07* | 11,8<br>*6,13* | 11,0<br>*6,23* | 10,1<br>*6,33* | 9,1<br>*6,40* | |
| **100-250E** | 7,5 | 132M | 16,7<br>*3,06* | | 16,9<br>*4,71* | 16,8<br>*5,06* | 16,6<br>*5,42* | 16,3<br>*5,75* | 16,2<br>*5,91* | 16,0<br>*6,07* | 15,5<br>*6,39* | 14,8<br>*6,69* | 14,0<br>*6,96* | 13,6<br>*7,08* | 13,2<br>*7,19* | 12,4<br>*7,38* | 11,4<br>*7,53* | | |
| **100-250D** | 7,5 | 132M | 19,6<br>*3,39* | | 19,6<br>*5,44* | 19,4<br>*5,88* | 19,2<br>*6,29* | 18,9<br>*6,66* | 18,7<br>*6,82* | 18,5<br>*6,98* | 18,0<br>*7,30* | 17,4<br>*7,60* | 16,6<br>*7,90* | 16,2<br>*8,05* | 15,7<br>*8,19* | 14,8<br>*8,41* | 13,7<br>*8,60* | 12,7<br>*8,75* | |
| | 11 | 160M | | | | | | | | | | | | | | | | | |
| **100-250A** | 11 | 160M | 22,6<br>*3,96* | | 22,3<br>*6,17* | 22,1<br>*6,67* | 21,8<br>*7,15* | 21,4<br>*7,59* | 21,2<br>*7,80* | 21,0<br>*8,00* | 20,5<br>*8,37* | 19,9<br>*8,71* | 19,1<br>*9,04* | 18,7<br>*9,20* | 18,3<br>*9,36* | 17,3<br>*9,63* | 16,1<br>*9,85* | 15,0<br>*10,04* | 13,8<br>*10,19* |

| TYPE - 50 Hz | P2 | Motor Size | Q (m3/h - l/min) | | | | | | | | | | | | | | | |
|---|---|---|---|---|---|---|---|---|---|---|---|---|---|---|---|---|---|---|
| | | | 0 | 72 | 84 | 96 | 102 | 108 | 120 | 132 | 144 | 150 | 156 | 168 | 180 | 192 | 204 | 216 |
| | | | 0 | 1200 | 1400 | 1600 | 1700 | 1800 | 2000 | 2200 | 2400 | 2500 | 2600 | 2800 | 3000 | 3200 | 3400 | 3600 |
| | kW | | H (m)<br>*pump input power (kW)* | | | | | | | | | | | | | | | |
| **100-315B** | 15 | 160L | 31,8<br>*4,74* | 31,4<br>*9,27* | 30,6<br>*10,05* | 29,8<br>*9,67* | 29,4<br>*10,05* | 29,0<br>*11,42* | 28,2<br>*11,10* | 27,3<br>*12,54* | 26,3<br>*12,27* | 25,8<br>*12,54* | 25,3<br>*13,54* | 24,2<br>*13,06* | 23,0<br>*14,31* | 21,4<br>*13,54* | 19,7<br>*14,92* | 17,9<br>*15,14* |
| **100-315A** | 18,5 | 180M | 37,1<br>*5,63* | 36,5<br>*11,03* | 35,7<br>*11,94* | 34,9<br>*12,80* | 34,4<br>*13,21* | 34,0<br>*13,60* | 33,1<br>*14,33* | 32,2<br>*15,01* | 31,2<br>*15,69* | 30,7<br>*16,02* | 30,2<br>*16,32* | 29,1<br>*16,86* | 27,9<br>*17,32* | 26,3<br>*17,76* | 24,7<br>*18,15* | 23,1<br>*18,49* |

| TYPE - 50 Hz | P2 | Motor Size | Q (m³/h - l/min) | | | | | | | | | | | | | | | | | |
|---|---|---|---|---|---|---|---|---|---|---|---|---|---|---|---|---|---|---|---|---|
| | | | 0 | 84 | 96 | 102 | 108 | 120 | 132 | 144 | 150 | 156 | 168 | 180 | 192 | 204 | 216 | 228 | 240 | 252 |
| | | | 0 | 1400 | 1600 | 1700 | 1800 | 2000 | 2200 | 2400 | 2500 | 2600 | 2800 | 3000 | 3200 | 3400 | 3600 | 3800 | 4000 | 4200 |
| | kW | | H (m)<br>*pump input power (kW)* | | | | | | | | | | | | | | | | | |
| **100-400C** | 22 | 180L | 42,4<br>*6,93* | 40,6<br>*14,36* | 39,8<br>*15,34* | 39,3<br>*15,81* | 38,8<br>*16,27* | 37,8<br>*17,14* | 36,7<br>*17,98* | 35,5<br>*18,83* | 34,9<br>*19,25* | 34,3<br>*19,64* | 32,8<br>*20,30* | 31,4<br>*20,95* | 30,3<br>*21,50* | 29,1<br>*21,91* | 27,7<br>*22,31* | 25,8<br>*22,70* | | |
| **100-400B** | 30 | 200L | 50,3<br>*9,32* | 48,7<br>*18,20* | 47,9<br>*19,51* | 47,5<br>*20,14* | 47,0<br>*20,75* | 46,0<br>*21,93* | 44,9<br>*23,04* | 43,8<br>*24,07* | 43,2<br>*24,56* | 42,6<br>*25,03* | 41,3<br>*25,95* | 39,8<br>*26,80* | 38,2<br>*27,61* | 36,5<br>*28,36* | 34,7<br>*29,01* | 33,1<br>*29,56* | 31,6<br>*30,00* | |
| **100-400A** | 37 | 225S | 58,3<br>*11,46* | 56,0<br>*21,50* | 55,2<br>*23,05* | 54,8<br>*23,80* | 54,3<br>*24,54* | 53,4<br>*25,95* | 52,4<br>*27,31* | 51,3<br>*28,63* | 50,7<br>*29,27* | 50,1<br>*29,89* | 48,7<br>*31,07* | 47,3<br>*32,15* | 45,8<br>*33,12* | 44,3<br>*34,00* | 42,7<br>*34,77* | 40,9<br>*35,48* | 38,8<br>*36,11* | 36,7<br>*36,69* |

| TYPE - 50 Hz | P2 | Motor Size | Q (m³/h - l/min) | | | | | | | | | | | | | | | | |
|---|---|---|---|---|---|---|---|---|---|---|---|---|---|---|---|---|---|---|---|
| | | | 0 | 102 | 108 | 120 | 132 | 144 | 150 | 156 | 168 | 180 | 192 | 204 | 216 | 228 | 240 | 252 | 276 |
| | | | 0 | 1700 | 1800 | 2000 | 2200 | 2400 | 2500 | 2600 | 2800 | 3000 | 3200 | 3400 | 3600 | 3800 | 4000 | 4200 | 4600 |
| | kW | | H (m)<br>*pump input power (kW)* | | | | | | | | | | | | | | | | |
| **125-250B** | 11 | 160M | 19,6<br>*5,41* | 20,2<br>*8,04* | 20,0<br>*8,22* | 19,7<br>*8,56* | 19,2<br>*8,80* | 18,8<br>*9,30* | 18,5<br>*9,50* | 18,2<br>*9,66* | 17,6<br>*9,99* | 16,9<br>*10,23* | 16,1<br>*10,44* | 15,2<br>*10,67* | 14,3<br>*10,88* | 13,3<br>*11,02* | 12,2<br>*11,12* | 11,1<br>*11,18* | |
| **125-250A** | 15 | 160L | 23,2<br>*6,18* | 24,0<br>*9,71* | 23,8<br>*9,92* | 23,5<br>*10,36* | 23,2<br>*10,80* | 22,8<br>*11,24* | 22,6<br>*11,47* | 22,4<br>*11,70* | 21,9<br>*12,16* | 21,3<br>*12,60* | 20,7<br>*13,02* | 20,0<br>*13,42* | 19,3<br>*13,77* | 18,5<br>*14,08* | 17,6<br>*14,34* | 16,6<br>*14,57* | 14,7<br>*14,94* |

| TYPE - 50 Hz | P2 | Motor Size | Q (m³/h - l/min) | | | | | | | | | | | | | | | | | |
|---|---|---|---|---|---|---|---|---|---|---|---|---|---|---|---|---|---|---|---|---|
| | | | 0 | 120 | 132 | 144 | 150 | 156 | 168 | 180 | 192 | 204 | 216 | 228 | 240 | 252 | 276 | 348 | 372 | 396 |
| | | | 0 | 2000 | 2200 | 2400 | 2500 | 2600 | 2800 | 3000 | 3200 | 3400 | 3600 | 3800 | 4000 | 4200 | 4600 | 5800 | 6200 | 6600 |
| | kW | | H (m)<br>*pump input power (kW)* | | | | | | | | | | | | | | | | | |
| **125-315C** | 22 | 180L | 24,1<br>*7,23* | 25,8<br>*12,72* | 25,7<br>*13,39* | 25,5<br>*14,05* | 25,4<br>*14,38* | 25,3<br>*14,70* | 25,0<br>*15,34* | 24,7<br>*15,95* | 24,4<br>*16,49* | 24,1<br>*16,99* | 23,7<br>*17,48* | 23,3<br>*17,98* | 22,8<br>*18,49* | 22,2<br>*18,99* | 21,0<br>*19,96* | 15,7<br>*22,32* | | |
| **125-315B** | 30 | 200L | 31,5<br>*9,52* | 33,0<br>*16,73* | 33,0<br>*17,53* | 32,9<br>*18,36* | 32,8<br>*18,77* | 32,7<br>*19,15* | 32,4<br>*19,84* | 32,1<br>*20,43* | 31,7<br>*21,01* | 31,3<br>*21,67* | 31,0<br>*22,39* | 30,6<br>*23,13* | 30,1<br>*23,83* | 29,6<br>*24,48* | 28,3<br>*25,71* | 24,2<br>*29,14* | 22,2<br>*30,13* | |
| **125-315A** | 37 | 225S | 38,6<br>*11,88* | 39,6<br>*20,51* | 39,5<br>*21,40* | 39,2<br>*22,29* | 39,0<br>*22,73* | 38,8<br>*23,17* | 38,4<br>*24,03* | 38,1<br>*24,84* | 37,9<br>*25,60* | 37,6<br>*26,36* | 37,3<br>*27,14* | 37,0<br>*27,97* | 36,6<br>*28,82* | 36,2<br>*29,66* | 35,2<br>*31,26* | 29,6<br>*35,58* | 28,2<br>*36,82* | |
| **125-400C** | 45 | 225M | 46,2<br>*13,91* | 47,6<br>*24,65* | 47,5<br>*25,83* | 47,2<br>*27,03* | 47,0<br>*27,62* | 46,9<br>*28,20* | 46,5<br>*29,31* | 46,1<br>*30,30* | 45,7<br>*31,22* | 45,2<br>*32,17* | 44,7<br>*33,24* | 44,2<br>*34,42* | 43,7<br>*35,62* | 43,2<br>*36,73* | 42,4<br>*38,53* | 36,5<br>*43,95* | 33,8<br>*45,52* | |
| **125-400B** | 55 | 250M | 53,4<br>*16,79* | 54,5<br>*28,74* | 54,3<br>*30,15* | 54,1<br>*31,55* | 54,0<br>*32,25* | 53,9<br>*32,94* | 53,5<br>*34,30* | 53,2<br>*35,60* | 52,7<br>*36,85* | 52,3<br>*38,07* | 51,7<br>*39,30* | 51,2<br>*40,56* | 50,6<br>*41,82* | 50,0<br>*43,06* | 48,8<br>*45,43* | 44,6<br>*51,75* | 42,0<br>*53,55* | 39,1<br>*55,27* |
| **125-400A** | 75 | 280S | 58,6<br>*18,95* | 59,5<br>*31,66* | 59,4<br>*33,20* | 59,2<br>*34,74* | 59,1<br>*35,52* | 59,0<br>*36,29* | 58,7<br>*37,81* | 58,3<br>*39,30* | 57,8<br>*40,77* | 57,4<br>*42,22* | 56,8<br>*43,66* | 56,3<br>*45,09* | 55,7<br>*46,50* | 55,1<br>*47,87* | 53,9<br>*50,49* | 49,9<br>*57,63* | 47,2<br>*59,76* | 45,0<br>*61,83* |

| TYPE - 50 Hz | P2 | Motor Size | Q (m³/h - l/min) | | | | | | | | | | | | | | | | | | | |
|---|---|---|---|---|---|---|---|---|---|---|---|---|---|---|---|---|---|---|---|---|---|---|
| | | | 0 | 144 | 150 | 156 | 168 | 180 | 192 | 204 | 216 | 228 | 240 | 252 | 276 | 348 | 372 | 396 | 444 | 492 | 540 | 564 |
| | | | 0 | 2400 | 2500 | 2600 | 2800 | 3000 | 3200 | 3400 | 3600 | 3800 | 4000 | 4200 | 4600 | 5800 | 6200 | 6600 | 7400 | 8200 | 9000 | 9400 |
| | kW | | H (m)<br>*pump input power (kW)* | | | | | | | | | | | | | | | | | | | |
| **150-315D** | 30 | 200L | 25,7<br>*12,22* | 28,3<br>*18,44* | 28,3<br>*18,74* | 28,3<br>*19,04* | 28,2<br>*19,63* | 28,1<br>*20,19* | 27,9<br>*20,71* | 27,7<br>*21,22* | 27,5<br>*21,72* | 27,2<br>*22,23* | 26,8<br>*22,73* | 26,5<br>*23,25* | 25,8<br>*24,37* | 24,7<br>*27,81* | 23,8<br>*28,75* | 22,7<br>*29,56* | 19,6<br>*30,78* | | | |
| **150-315C** | 37 | 225S | 29,6<br>*14,01* | 32,2<br>*21,16* | 32,2<br>*21,49* | 32,3<br>*21,84* | 32,2<br>*22,52* | 32,2<br>*23,20* | 32,1<br>*23,85* | 31,9<br>*24,45* | 31,6<br>*25,02* | 31,3<br>*25,58* | 31,0<br>*26,14* | 30,7<br>*26,73* | 30,2<br>*28,01* | 28,6<br>*31,79* | 27,9<br>*32,95* | 27,0<br>*34,00* | 24,7<br>*35,84* | 21,8<br>*37,45* | | |
| **150-315B** | 45 | 225M | 34,0<br>*16,47* | 36,3<br>*24,33* | 36,2<br>*24,72* | 36,2<br>*25,12* | 36,2<br>*25,92* | 36,1<br>*26,72* | 36,0<br>*27,47* | 35,7<br>*28,17* | 35,5<br>*28,85* | 35,4<br>*29,51* | 35,2<br>*30,15* | 34,9<br>*30,83* | 34,5<br>*32,25* | 32,8<br>*36,29* | 32,2<br>*37,54* | 31,3<br>*38,77* | 29,3<br>*41,13* | 26,9<br>*43,09* | 23,6<br>*44,99* | |
| **150-315A** | 55 | 250M | 39,4<br>*18,39* | 41,0<br>*27,78* | 41,0<br>*28,22* | 40,8<br>*28,66* | 40,8<br>*29,55* | 40,8<br>*30,43* | 40,8<br>*31,31* | 40,6<br>*32,18* | 40,3<br>*33,05* | 40,0<br>*33,92* | 39,7<br>*34,77* | 39,5<br>*35,59* | 39,2<br>*37,10* | 37,6<br>*41,75* | 36,6<br>*43,40* | 35,8<br>*45,02* | 34,1<br>*48,12* | 31,7<br>*50,36* | 28,9<br>*52,60* | 27,2<br>*53,65* |

| TYPE - 50 Hz | P2 | Motor Size | Q (m³/h - l/min) | | | | | | | | | | | | | | | | | | | |
|---|---|---|---|---|---|---|---|---|---|---|---|---|---|---|---|---|---|---|---|---|---|---|
| | | | 0 | 168 | 180 | 192 | 204 | 216 | 228 | 240 | 252 | 276 | 348 | 372 | 396 | 444 | 492 | 540 | 564 | 588 | 612 |
| | | | 0 | 2800 | 3000 | 3200 | 3400 | 3600 | 3800 | 4000 | 4200 | 4600 | 5800 | 6200 | 6600 | 7400 | 8200 | 9000 | 9400 | 9800 | 10200 |
| | kW | | H (m)<br>*pump input power (kW)* | | | | | | | | | | | | | | | | | | | |
| **150-400C** | 75 | 280S | 45,6<br>*20,78* | 47,8<br>*35,35* | 47,7<br>*36,41* | 47,6<br>*37,46* | 47,4<br>*38,54* | 47,2<br>*39,58* | 47,0<br>*40,43* | 46,7<br>*41,65* | 46,5<br>*42,62* | 45,8<br>*44,48* | 43,9<br>*50,44* | 43,1<br>*52,51* | 42,0<br>*54,34* | 39,2<br>*57,61* | 35,8<br>*60,59* | 31,5<br>*63,18* | 28,7<br>*64,43* | | |
| **150-400B** | 75 | 280S | 52,8<br>*26,57* | 54,4<br>*41,90* | 54,2<br>*43,10* | 53,9<br>*44,29* | 57,3<br>*45,48* | 53,5<br>*46,65* | 53,2<br>*47,81* | 52,9<br>*48,96* | 52,6<br>*50,10* | 51,8<br>*52,35* | 50,3<br>*58,79* | 49,8<br>*60,86* | 48,9<br>*62,94* | 46,1<br>*66,80* | 42,9<br>*70,20* | 39,1<br>*73,30* | 36,7<br>*74,72* | 34,3<br>*76,14* | |
| **150-400A** | 90 | 280M | 59,0<br>*29,82* | 60,3<br>*47,01* | 60,2<br>*48,30* | 60,0<br>*49,59* | 59,8<br>*50,88* | 59,9<br>*52,18* | 59,4<br>*53,48* | 59,1<br>*54,78* | 58,8<br>*56,10* | 58,1<br>*58,76* | 56,4<br>*66,15* | 56,0<br>*68,45* | 55,3<br>*70,93* | 53,3<br>*75,79* | 50,6<br>*79,82* | 46,7<br>*83,73* | 44,5<br>*85,61* | 42,2<br>*87,41* | 39,8<br>*89,16* |

## 4CA-4CAX ~ *1450 r.p.m.*

**Machines complementing the existing range, not envisaged in the EN 733 standard**

| TYPE - 50 Hz | P2 | Motor Size | Q (m³/h - l/min) | | | | | | | |
|---|---|---|---|---|---|---|---|---|---|---|
| | | | 0 | 200 | 250 | 400 | 600 | 800 | 850 | 900 |
| | | | 0 | 3333 | 4167 | 6667 | 10000 | 13333 | 14167 | 15000 |
| | kW | | H (m)<br>*pump input power (kW)* | | | | | | | |
| **200-315D** | 37 | 225S | 21,2<br>*18,00* | 21,7<br>*24,31* | 21,8<br>*26,11* | 21,2<br>*31,21* | 18,3<br>*36,07* | 12,5<br>*37,00* | | |
| **200-315C** | 45 | 225M | 26,6<br>*21,54* | 26,6<br>*29,42* | 26,4<br>*31,44* | 25,9<br>*37,61* | 23,1<br>*43,07* | 16,9<br>*45,42* | 14,6<br>*45,55* | |
| **200-315B** | 55 | 250M | 33,4<br>*25,04* | 33,4<br>*36,30* | 33,2<br>*38,91* | 32,2<br>*46,32* | 28,6<br>*52,72* | 21,7<br>*55,67* | 19,4<br>*55,62* | 16,7<br>*55,25* |
| **200-315A** | 75 | 280S | 36,3<br>*27,90* | 35,9<br>*39,49* | 35,8<br>*42,13* | 35,0<br>*50,07* | 31,8<br>*58,82* | 24,9<br>*62,36* | 22,5<br>*62,45* | 19,8<br>*62,15* |
| **200-400C** | 90 | 280M | 43,0<br>*31,27* | 44,1<br>*45,90* | 44,1<br>*50,14* | 43,6<br>*62,49* | 39,9<br>*77,58* | 31,5<br>*89,60* | | |
| **200-400B** | 110 | 315S | 49,5<br>*40,00* | 50,8<br>*54,29* | 51,0<br>*58,92* | 50,6<br>*73,89* | 47,2<br>*91,32* | 39,5<br>*105,65* | 36,6<br>*108,43* | |
| **200-400A** | 132 | 315M | 57,2<br>*49,00* | 58,5<br>*65,01* | 58,6<br>*70,26* | 58,2<br>*87,26* | 55,2<br>*107,05* | 48,2<br>*124,54* | 45,6<br>*128,46* | 44,0<br>*132,15* |

| TYPE - 50 Hz | P2 | Motor Size | Q (m³/h - l/min) | | | | | | | | | | | | | |
|---|---|---|---|---|---|---|---|---|---|---|---|---|---|---|---|---|
| | | | 0 | 250 | 400 | 600 | 800 | 850 | 900 | 1100 | 1170 | 1200 | 1300 | 1400 | 1500 | 1600 |
| | | | 0 | 4167 | 6667 | 10000 | 13333 | 14167 | 15000 | 18333 | 19500 | 20000 | 21667 | 23333 | 25000 | 26667 |
| | kW | | H (m)<br>*pump input power (kW)* | | | | | | | | | | | | | |
| **250-315C** | 55 | 280M | 26,1 | 25,5 | 25,3 | 24,1 | 22,3 | 21,7 | 21,0 | 16,8 | | | | | | |
| | 75 | 280S | *28,00* | *37,82* | *44,23* | *51,71* | *57,65* | *58,82* | *59,57* | *59,89* | | | | | | |
| **250-315B** | 75 | 280S | 33,2<br>*43,46* | 33,0<br>*54,77* | 32,7<br>*61,20* | 31,8<br>*68,72* | 29,6<br>*74,57* | 28,6<br>*75,26* | 27,5<br>*75,64* | 21,7<br>*74,47* | 19,0<br>*73,35* | | | | | |
| **250-315A** | 90 | 280M | 35,8<br>*46,41* | 35,0<br>*57,61* | 34,4<br>*64,50* | 33,3<br>*73,28* | 31,3<br>*78,44* | 30,4<br>*79,01* | 29,3<br>*79,32* | 23,0<br>*78,27* | 20,7<br>*77,03* | 20,0<br>*76,36* | | | | |
| **250-400D** | 110 | 315S | 38,3 | 39,9 | 39,9 | 39,0 | 36,9 | 36,1 | 35,2 | 30,6 | 28,6 | 27,7 | 24,3 | | | |
| | 132 | 315M | *48,00* | *61,74* | *71,25* | *84,15* | *95,73* | *98,36* | *100,80* | *108,97* | *111,27* | *112,17* | *114,78* | | | |
| **250-400C** | 132 | 315M | 44,0 | 45,8 | 45,9 | 44,9 | 42,7 | 42,0 | 41,2 | 37,2 | 35,4 | 34,5 | 31,3 | 27,4 | | |
| | 160 | 315L | *53,83* | *71,89* | *83,20* | *98,11* | *112,06* | *115,25* | *118,20* | *128,07* | *130,85* | *131,93* | *135,08* | *137,50* | | |
| **250-400B** | 160 | 315L | 50,0 | 51,7 | 51,8 | 51,0 | 49,0 | 48,4 | 47,6 | 43,9 | 42,3 | 41,5 | 38,5 | 34,8 | 30,3 | |
| | 200 | 315L | *64,57* | *84,18* | *97,49* | *115,36* | *131,10* | *134,76* | *138,27* | *151,48* | *155,58* | *157,12* | *161,60* | *164,88* | *167,09* | |
| **250-400A** | 200 | 315L | 55,7<br>*70,94* | 57,4<br>*91,89* | 57,5<br>*106,81* | 56,5<br>*127,19* | 54,5<br>*145,00* | 53,8<br>*149,18* | 53,0<br>*153,24* | 49,4<br>*168,92* | 47,9<br>*173,94* | 47,1<br>*175,86* | 44,3<br>*181,62* | 40,8<br>*186,11* | 36,6<br>*189,07* | 31,7<br>*190,57* |

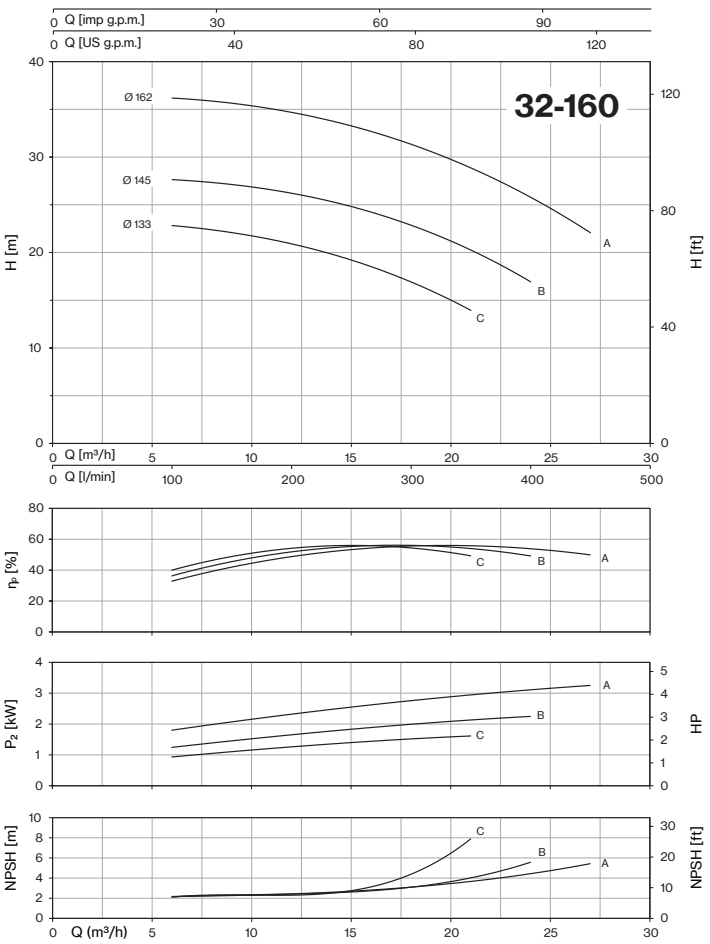
32-160
Q [imp g.p.m.]
Q [US g.p.m.]
Ø 162
Ø 145
Ø 133
A
B
C
H [m]
H [ft]
Q [m³/h]
Q [l/min]
ηp [%]
P2 [kW]
HP
NPSH [m]
NPSH [ft]
Q (m³/h)

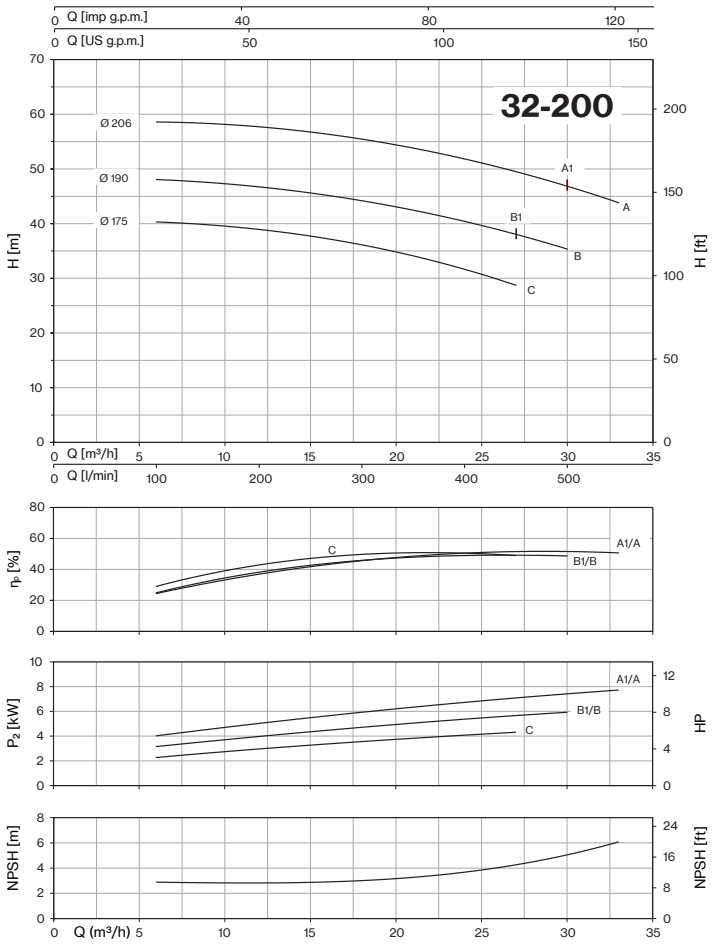
32-200
Q [imp g.p.m.]
Q [US g.p.m.]
Ø 206
Ø 190
Ø 175
A1
A
B1
B
C
H [m]
H [ft]
Q [m³/h]
Q [l/min]
ηp [%]
A1/A
B1/B
P2 [kW]
HP
NPSH [m]
NPSH [ft]
Q (m³/h)

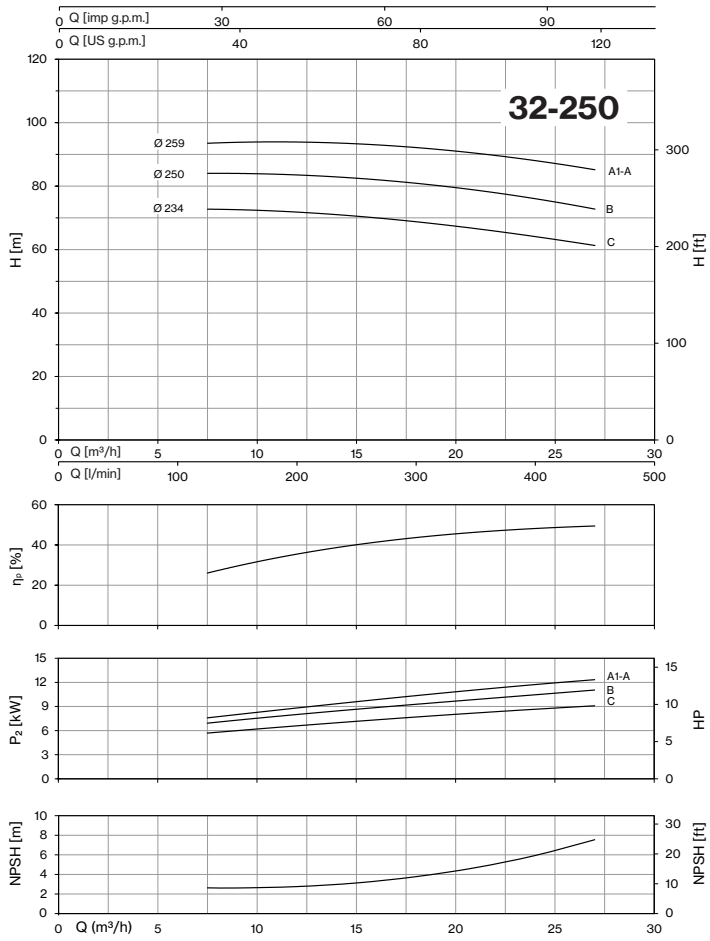
32-250
Q [imp g.p.m.]
Q [US g.p.m.]
Ø 259
Ø 250
Ø 234
A1-A
B
C
H [m]
H [ft]
Q [m³/h]
Q [l/min]
ηp [%]
P2 [kW]
HP
NPSH [m]
NPSH [ft]
Q (m³/h)

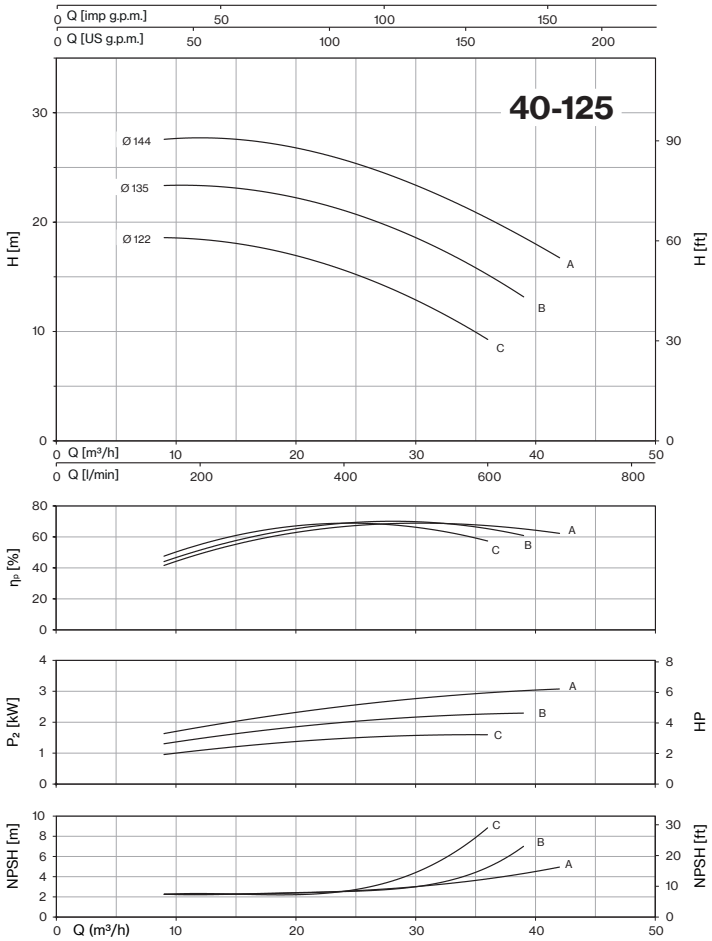
40-125
Q [imp g.p.m.]
Q [US g.p.m.]
Ø 144
Ø 135
Ø 122
A
B
C
H [m]
H [ft]
Q [m³/h]
Q [l/min]
ηp [%]
P2 [kW]
HP
NPSH [m]
NPSH [ft]
Q (m³/h)

# CM-CMG-CMGX-CA-CAX ~ *EN 733*

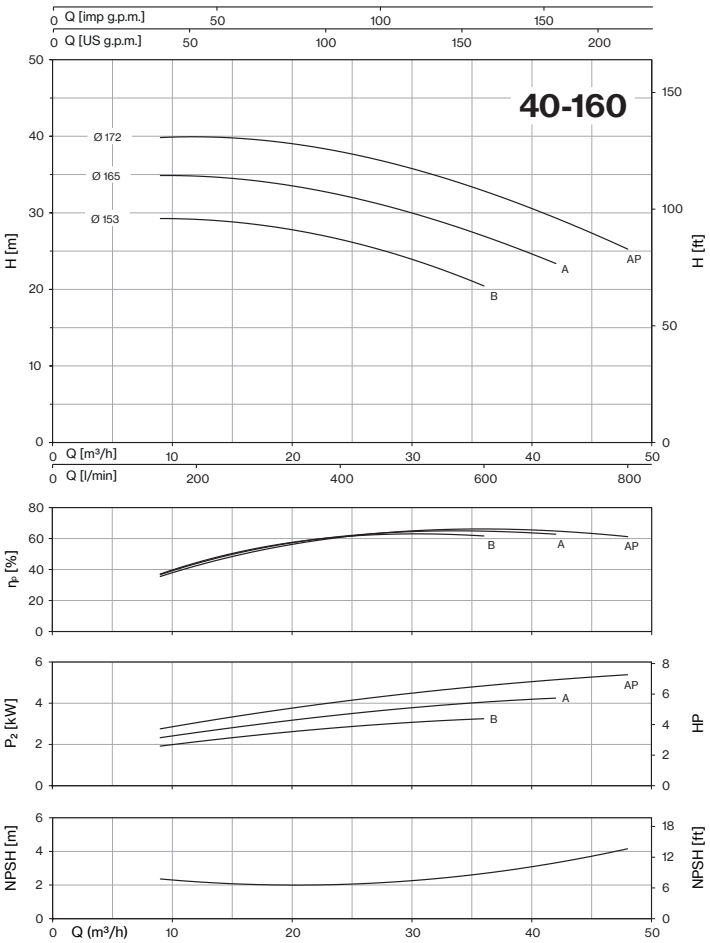


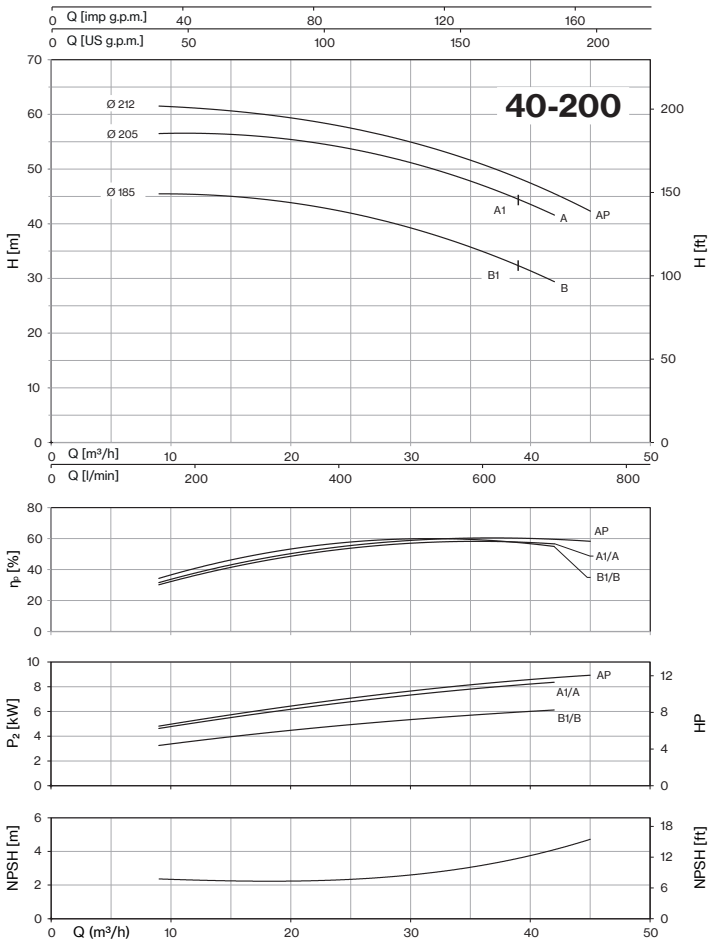


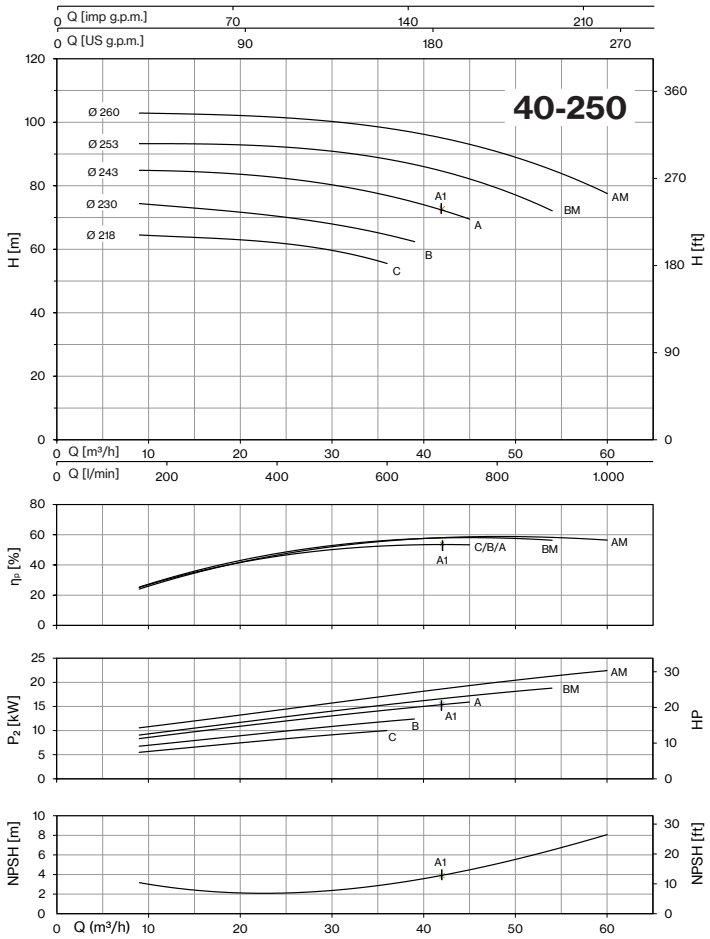


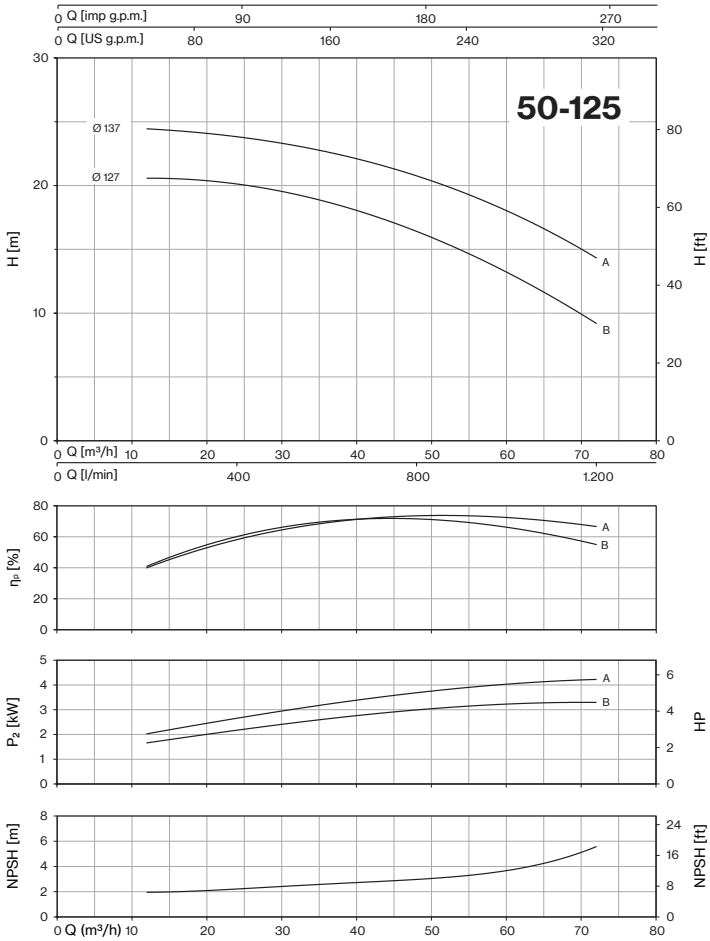




*Tolerance: ISO 9906:2012 - Grade 3B*

*Check pumps availability on pages 86-87-88*

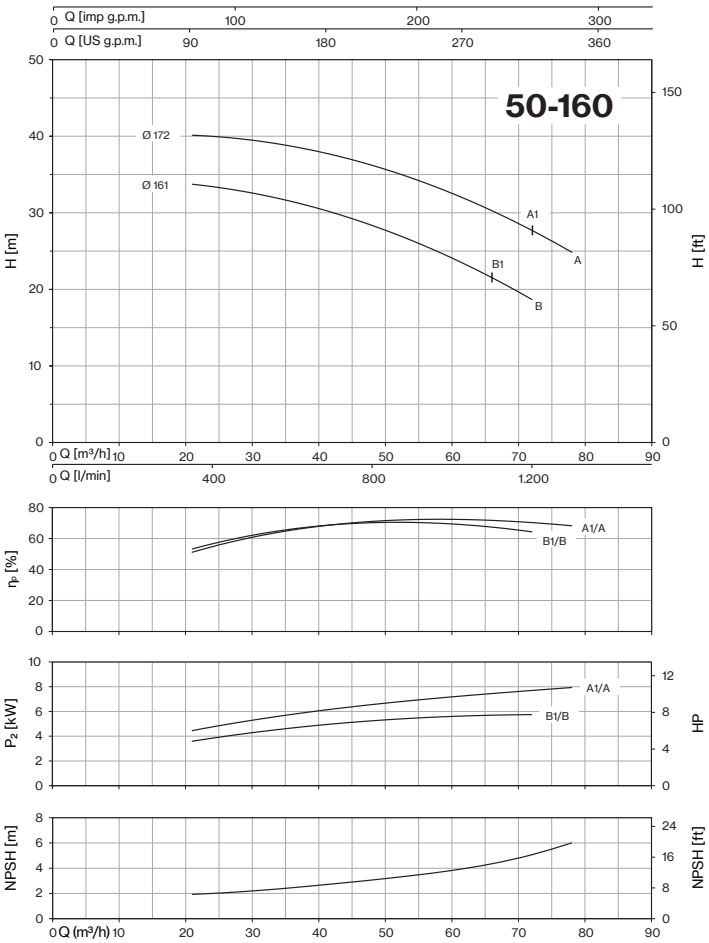
50-160
Q [imp g.p.m.]
Q [US g.p.m.]
H [m]
H [ft]
Ø 172
Ø 161
A1
A
B1
B
Q [m³/h]
Q [l/min]
ηp [%]
A1/A
B1/B
P2 [kW]
HP
NPSH [m]
NPSH [ft]
Q (m³/h)

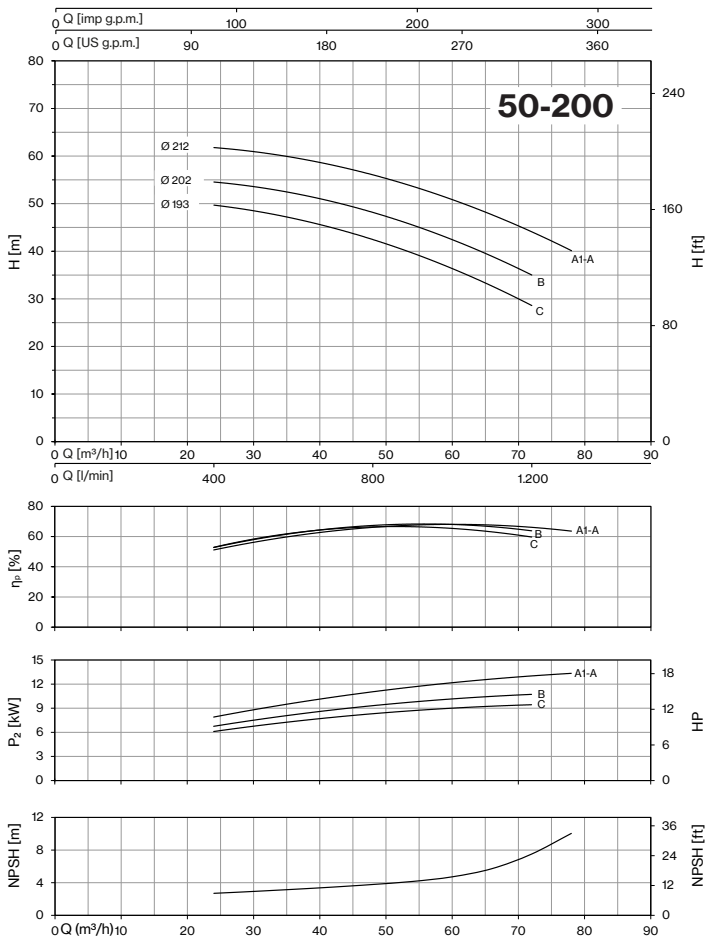
50-200
Q [imp g.p.m.]
Q [US g.p.m.]
H [m]
H [ft]
Ø 212
Ø 202
Ø 193
A1-A
B
C
Q [m³/h]
Q [l/min]
ηp [%]
P2 [kW]
HP
NPSH [m]
NPSH [ft]
Q (m³/h)

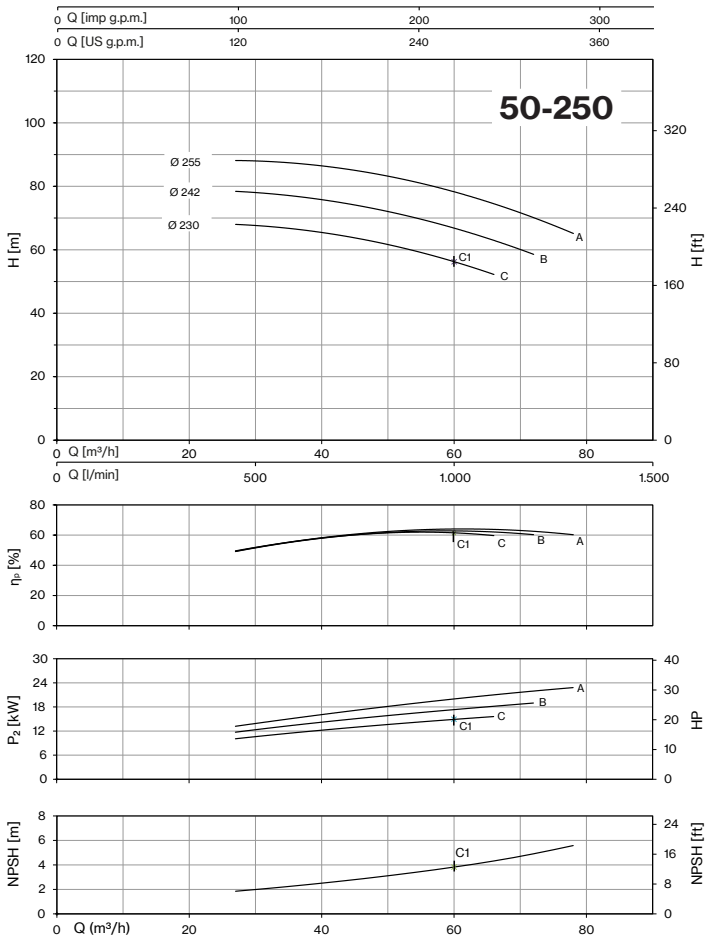
50-250
Q [imp g.p.m.]
Q [US g.p.m.]
H [m]
H [ft]
Ø 255
Ø 242
Ø 230
A
B
C1
C
Q [m³/h]
Q [l/min]
ηp [%]
P2 [kW]
HP
NPSH [m]
NPSH [ft]
Q (m³/h)

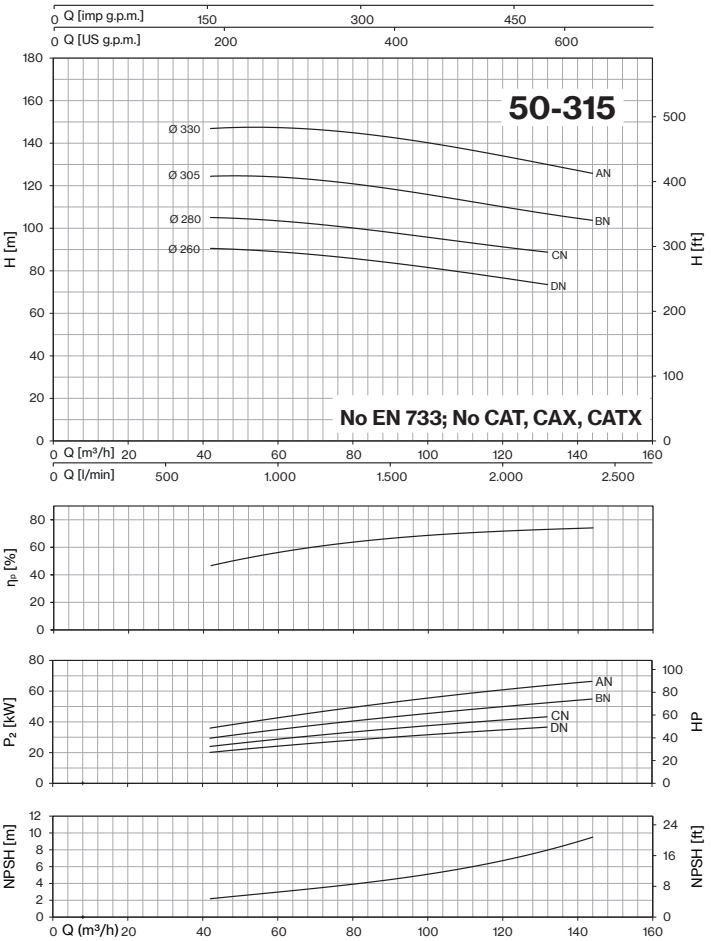
50-315
Q [imp g.p.m.]
Q [US g.p.m.]
H [m]
H [ft]
Ø 330
Ø 305
Ø 280
Ø 260
AN
BN
CN
DN
No EN 733; No CAT, CAX, CATX
Q [m³/h]
Q [l/min]
ηp [%]
P2 [kW]
HP
NPSH [m]
NPSH [ft]
Q (m³/h)

# CM-CMG-CMGX-CA-CAX ~ *EN 733*

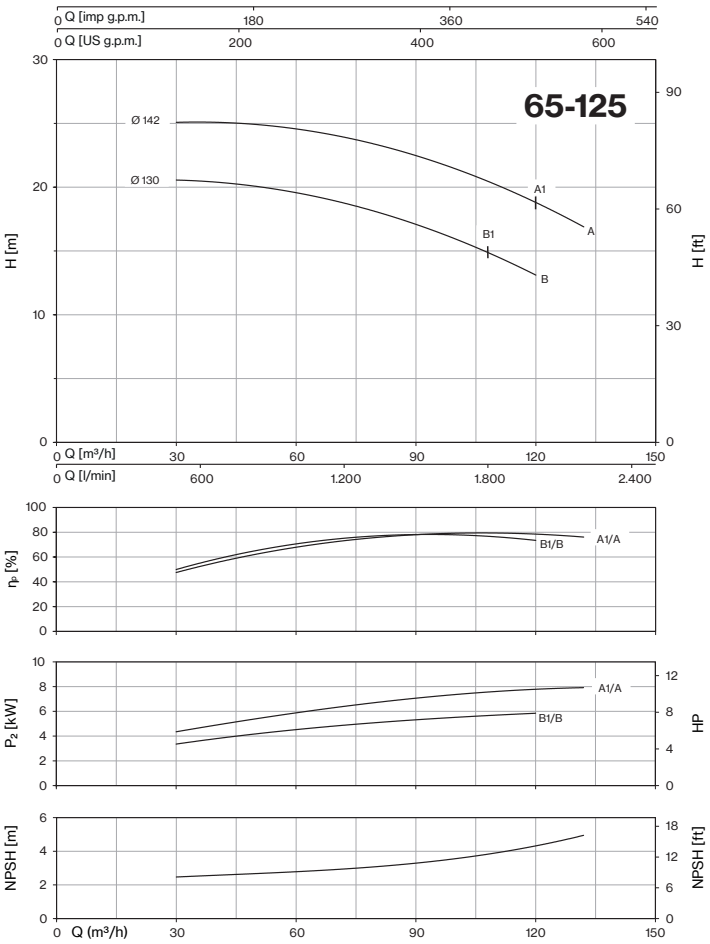


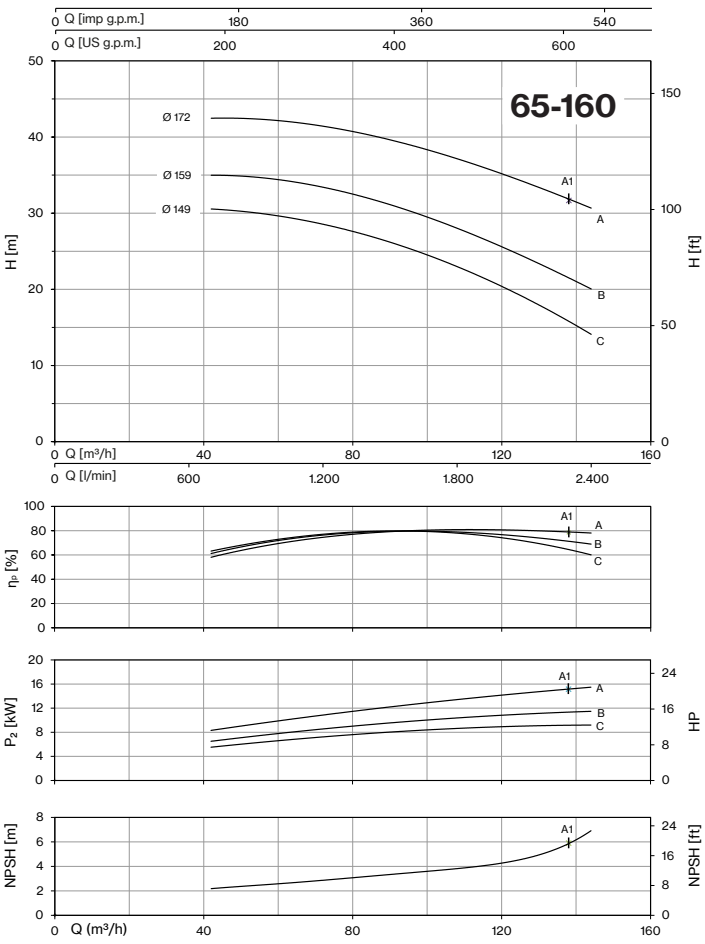


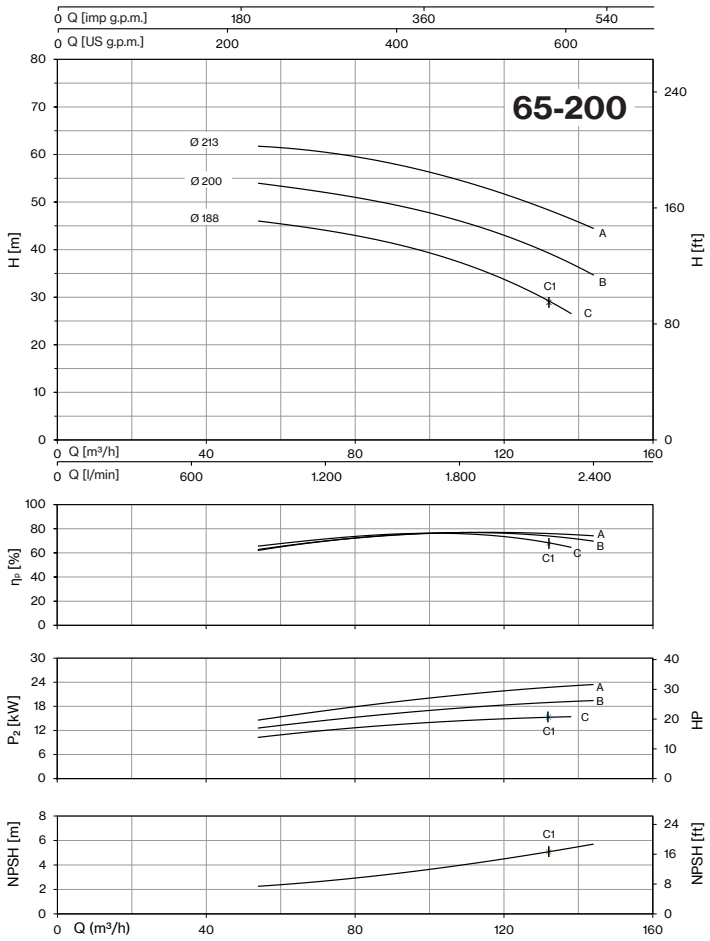


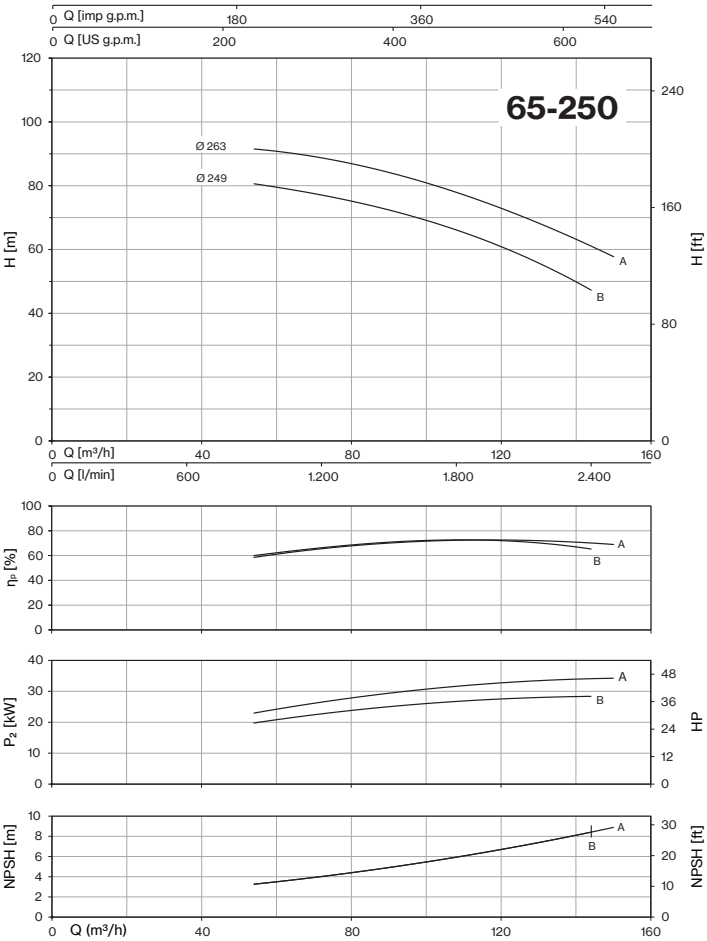




*Tolerance: ISO 9906:2012 - Grade 3B*

*Check pumps availability on pages 86-87-88*

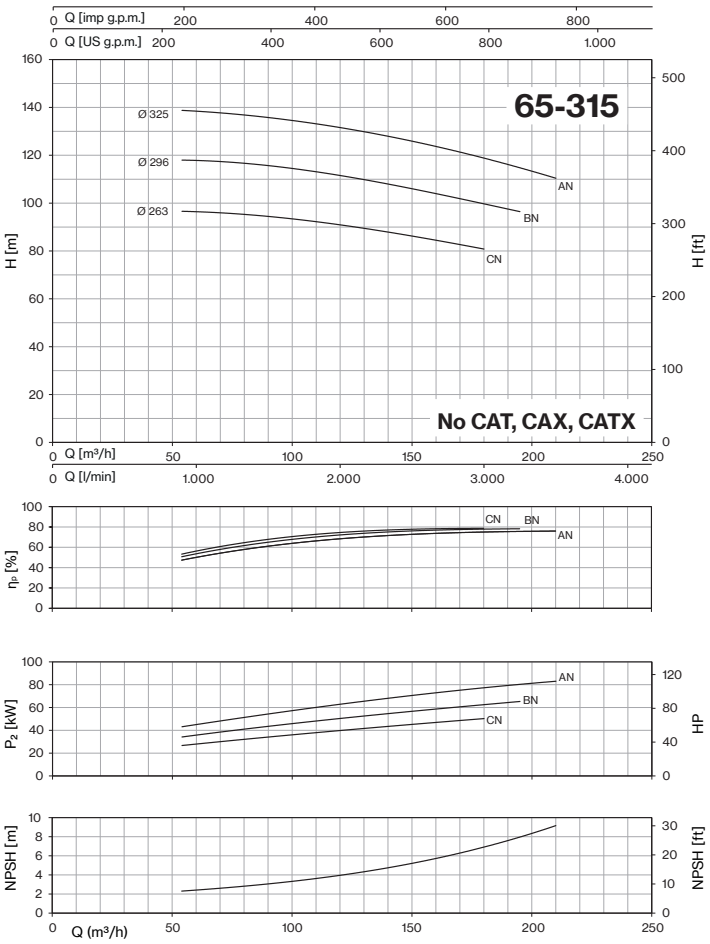
65-315
No CAT, CAX, CATX
Ø 325
Ø 296
Ø 263
AN
BN
CN
Q [imp g.p.m.]
Q [US g.p.m.]
Q [m³/h]
Q [l/min]
H [m]
H [ft]
ηP [%]
P2 [kW]
HP
NPSH [m]
NPSH [ft]
Q (m³/h)

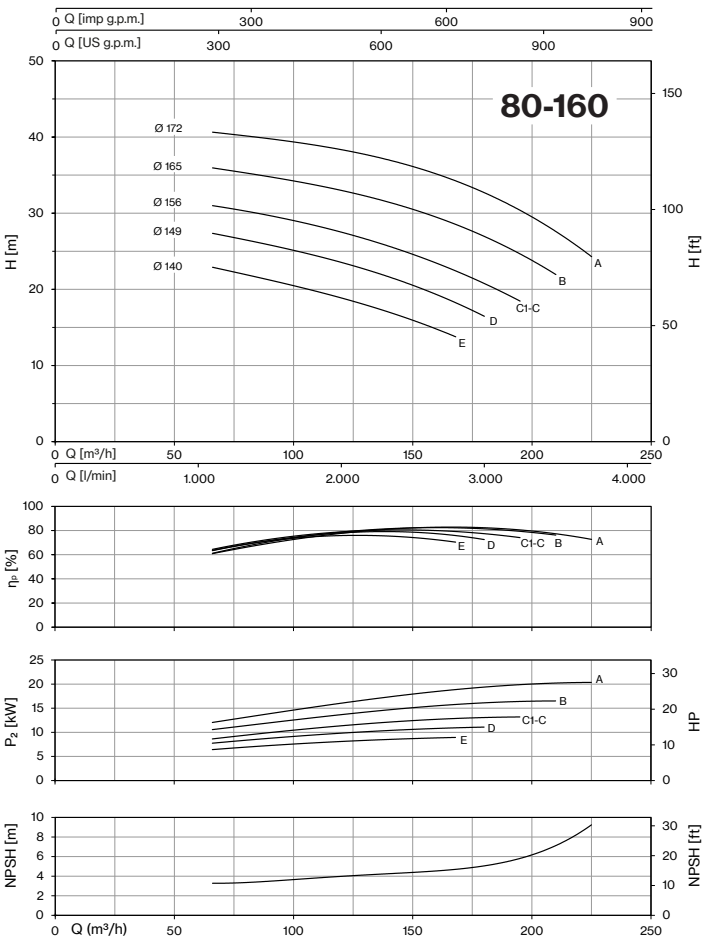
80-160
Ø 172
Ø 165
Ø 156
Ø 149
Ø 140
A
B
C1-C
D
E
Q [imp g.p.m.]
Q [US g.p.m.]
Q [m³/h]
Q [l/min]
H [m]
H [ft]
ηP [%]
P2 [kW]
HP
NPSH [m]
NPSH [ft]
Q (m³/h)

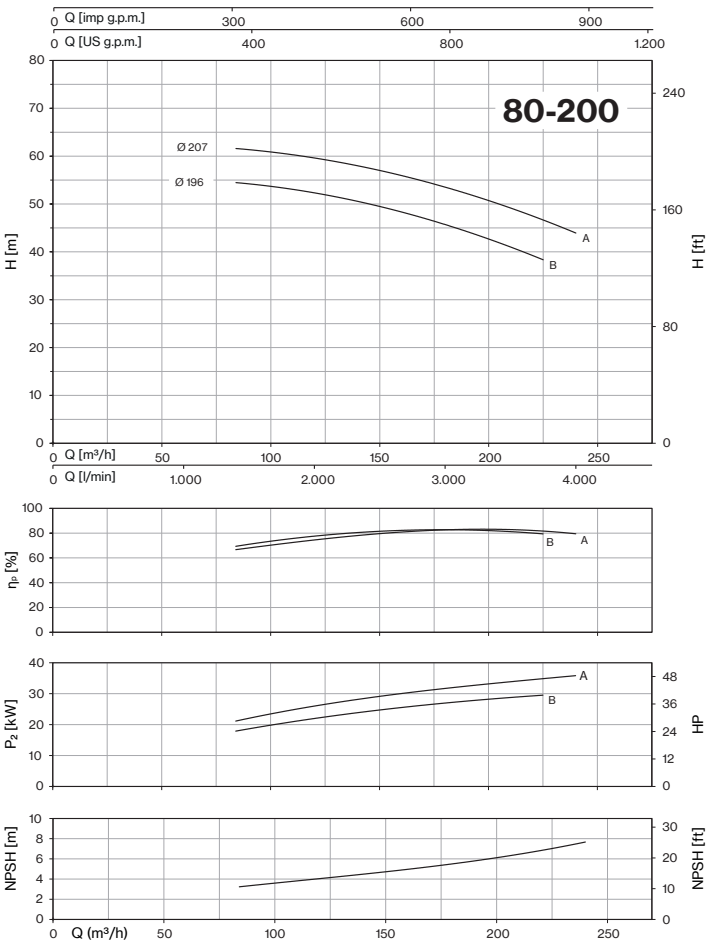
80-200
Ø 207
Ø 196
A
B
Q [imp g.p.m.]
Q [US g.p.m.]
Q [m³/h]
Q [l/min]
H [m]
H [ft]
ηP [%]
P2 [kW]
HP
NPSH [m]
NPSH [ft]
Q (m³/h)

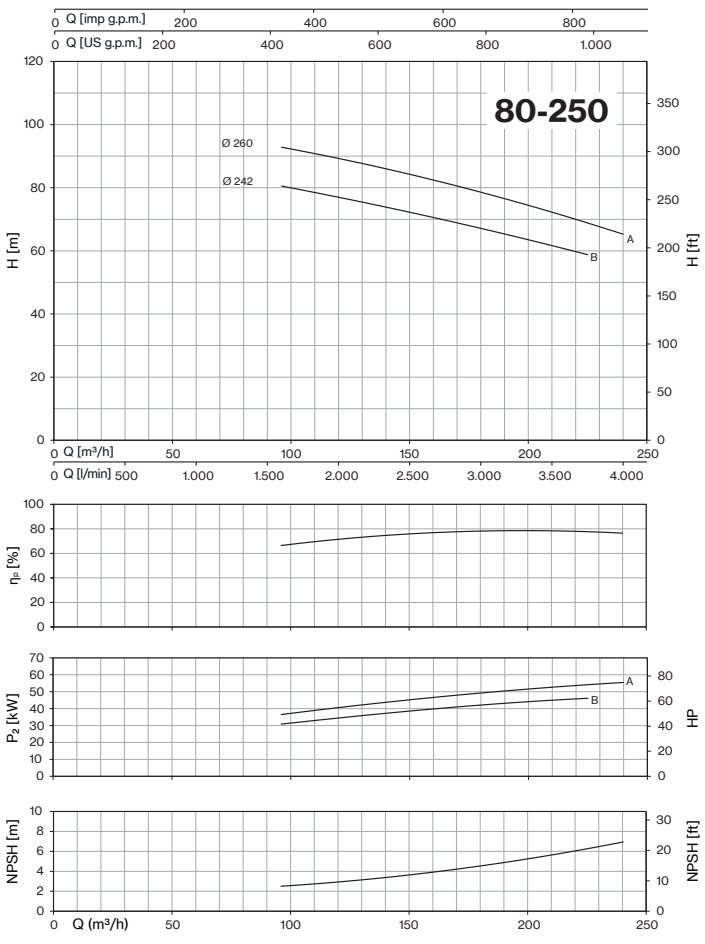
80-250
Ø 260
Ø 242
A
B
Q [imp g.p.m.]
Q [US g.p.m.]
Q [m³/h]
Q [l/min]
H [m]
H [ft]
ηP [%]
P2 [kW]
HP
NPSH [m]
NPSH [ft]
Q (m³/h)

# CM-CMG-CMGX-CA-CAX ~ *EN 733*

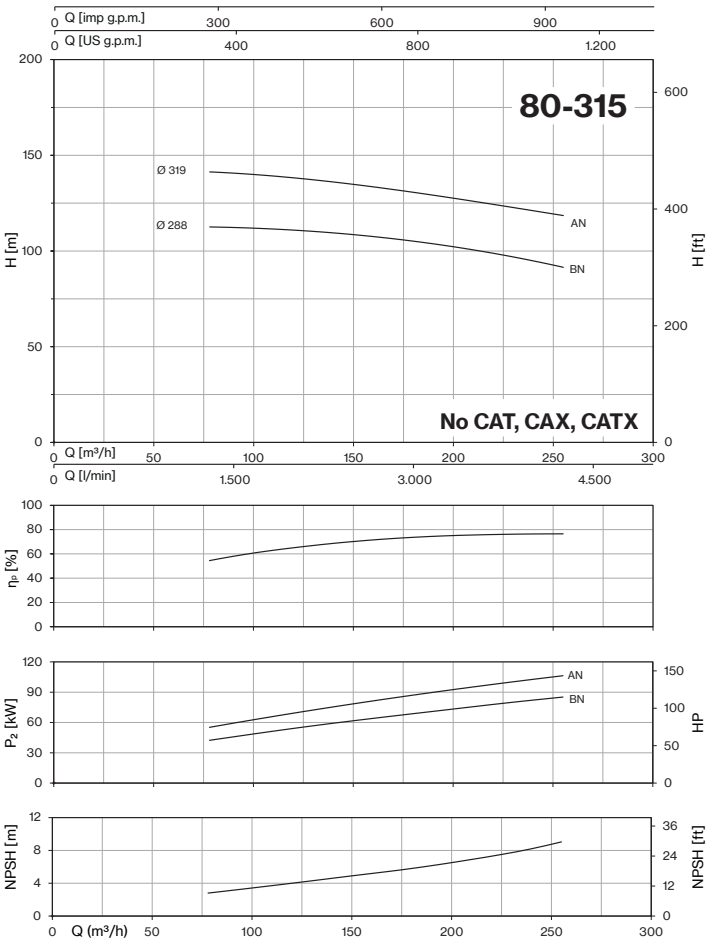


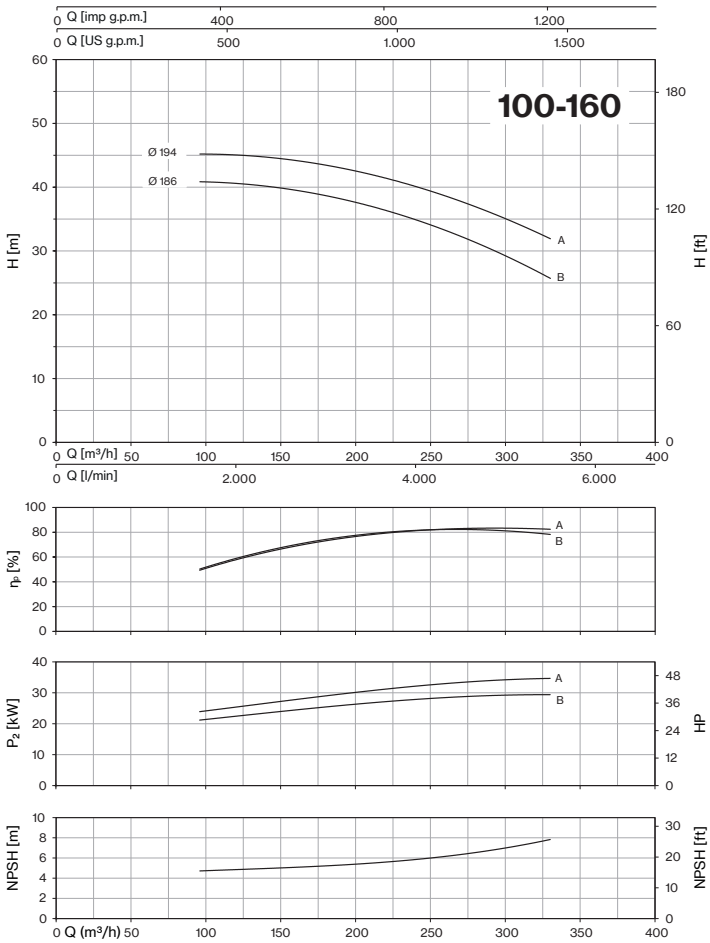


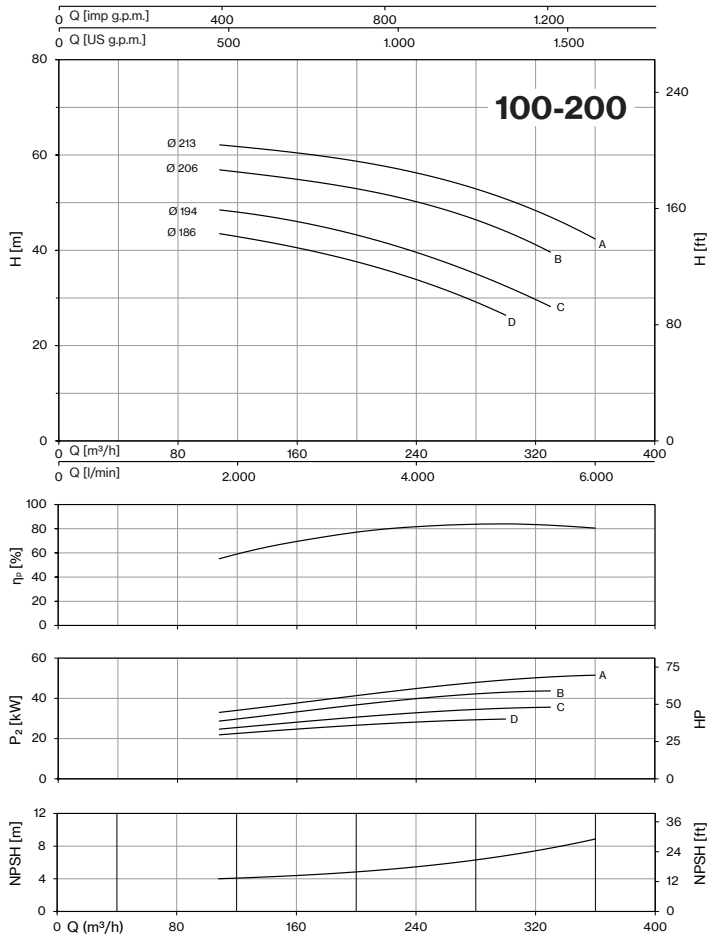


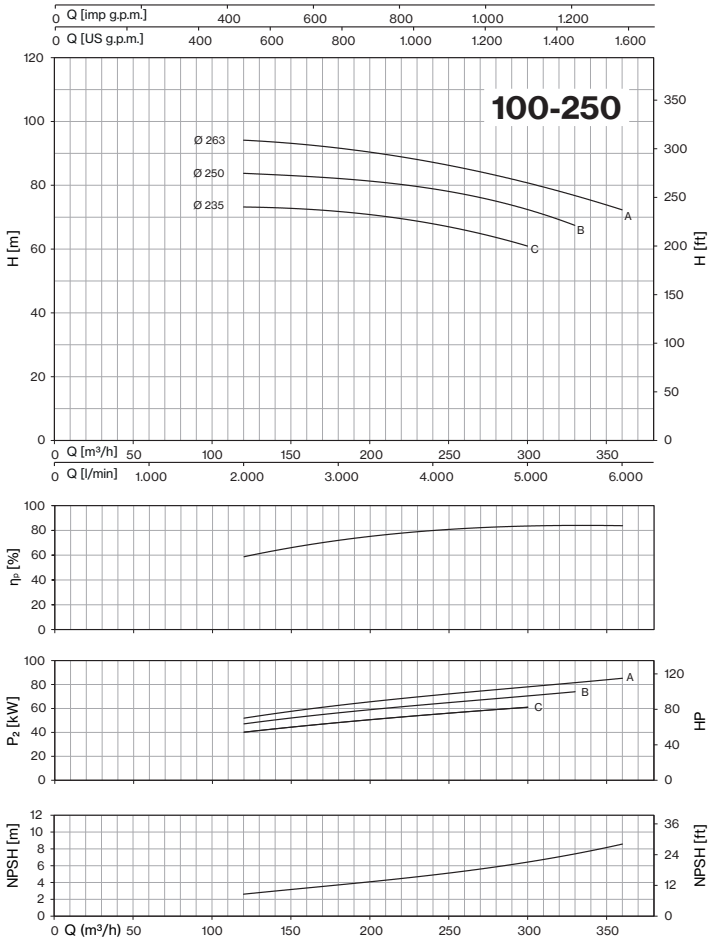




*Tolerance: ISO 9906:2012 - Grade 3B*

*Check pumps availability on pages 86-87-88*

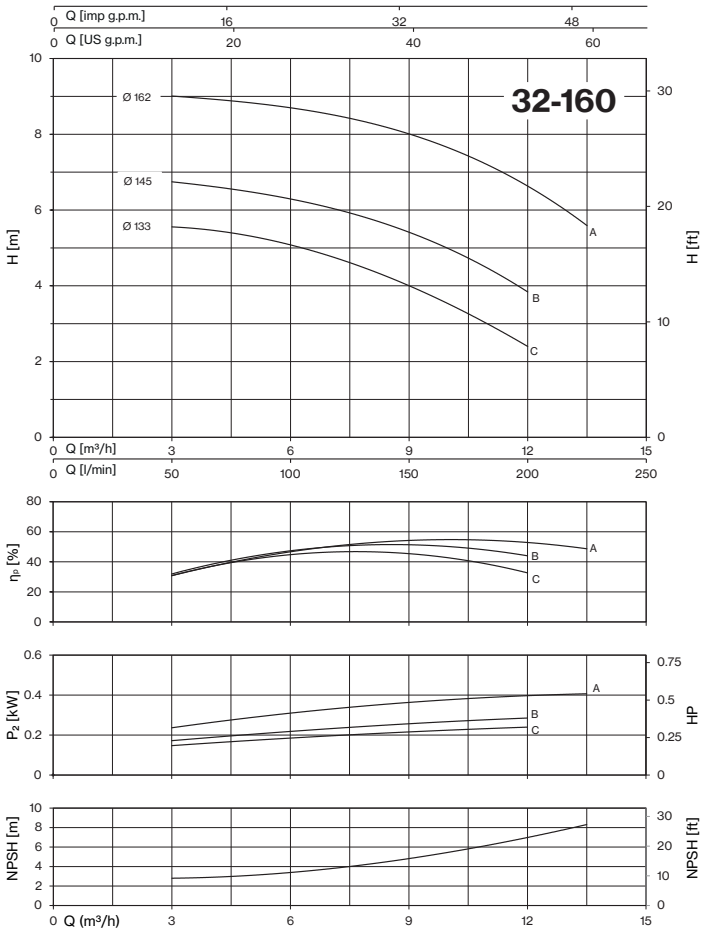
32-160
Q [imp g.p.m.]
Q [US g.p.m.]
Ø 162
Ø 145
Ø 133
A
B
C
H [m]
H [ft]
Q [m³/h]
Q [l/min]
ηP [%]
P2 [kW]
HP
NPSH [m]
NPSH [ft]
Q (m³/h)

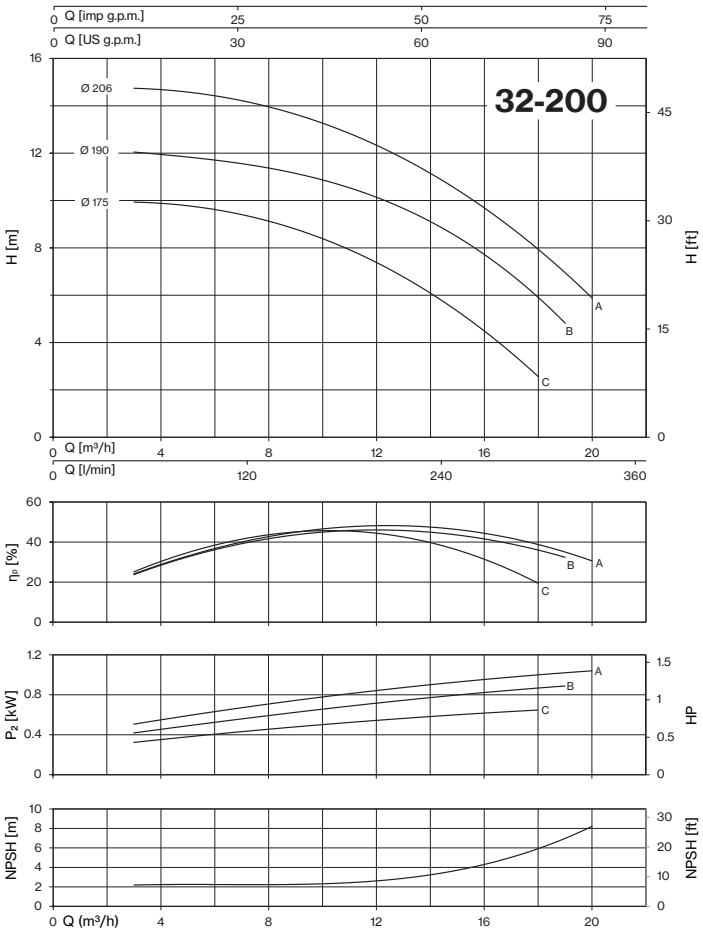
32-200
Q [imp g.p.m.]
Q [US g.p.m.]
Ø 206
Ø 190
Ø 175
A
B
C
H [m]
H [ft]
Q [m³/h]
Q [l/min]
ηP [%]
P2 [kW]
HP
NPSH [m]
NPSH [ft]
Q (m³/h)

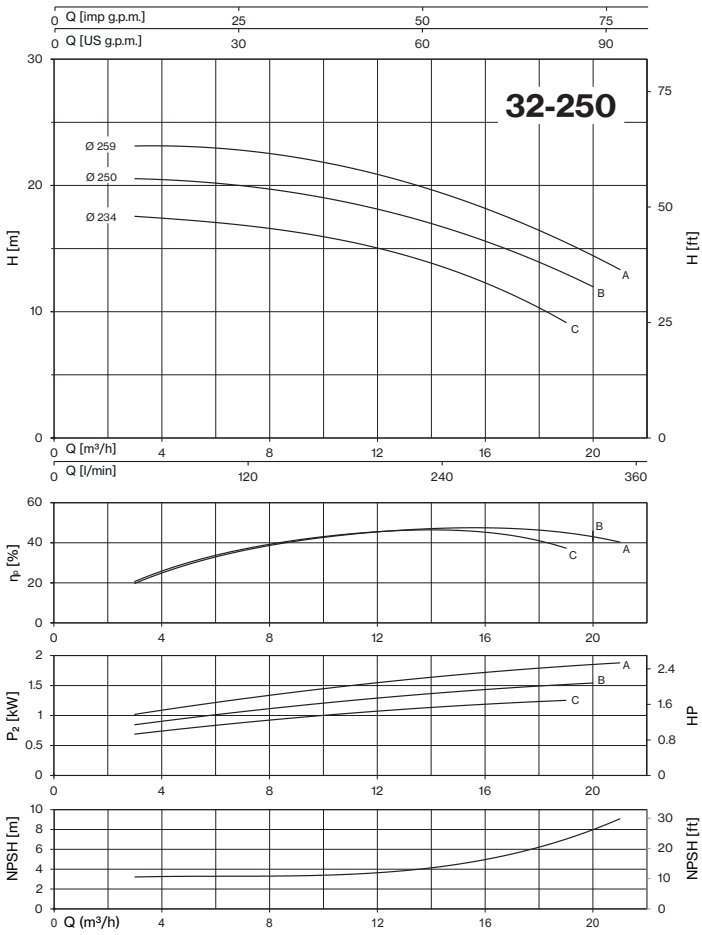
32-250
Q [imp g.p.m.]
Q [US g.p.m.]
Ø 259
Ø 250
Ø 234
A
B
C
H [m]
H [ft]
Q [m³/h]
Q [l/min]
ηP [%]
P2 [kW]
HP
NPSH [m]
NPSH [ft]
Q (m³/h)

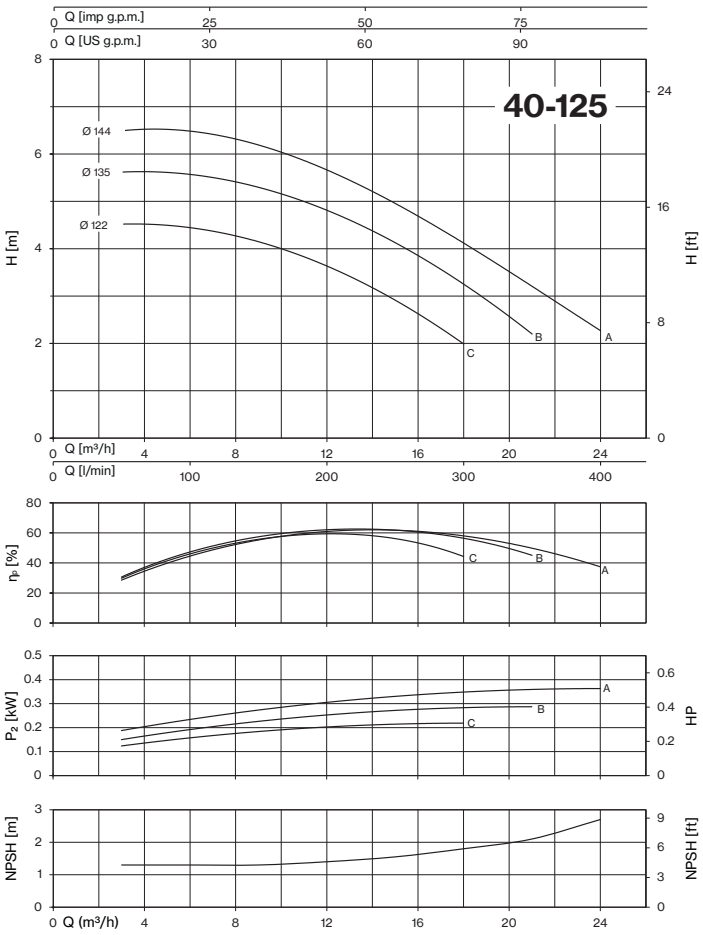
40-125
Q [imp g.p.m.]
Q [US g.p.m.]
Ø 144
Ø 135
Ø 122
A
B
C
H [m]
H [ft]
Q [m³/h]
Q [l/min]
ηP [%]
P2 [kW]
HP
NPSH [m]
NPSH [ft]
Q (m³/h)

# 4CA-4CAX ~ *EN 733*

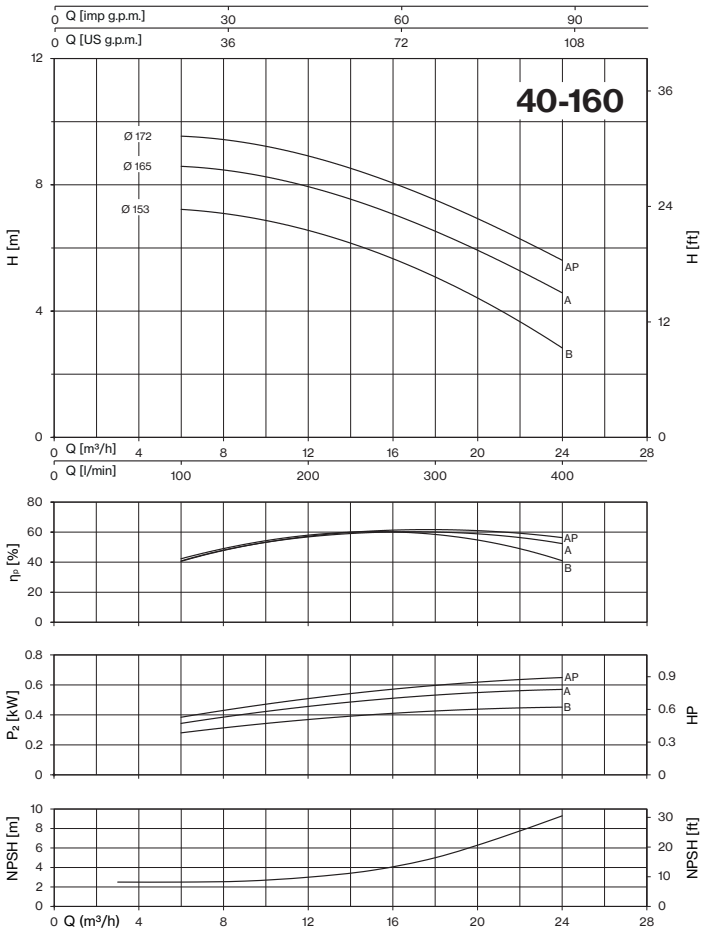


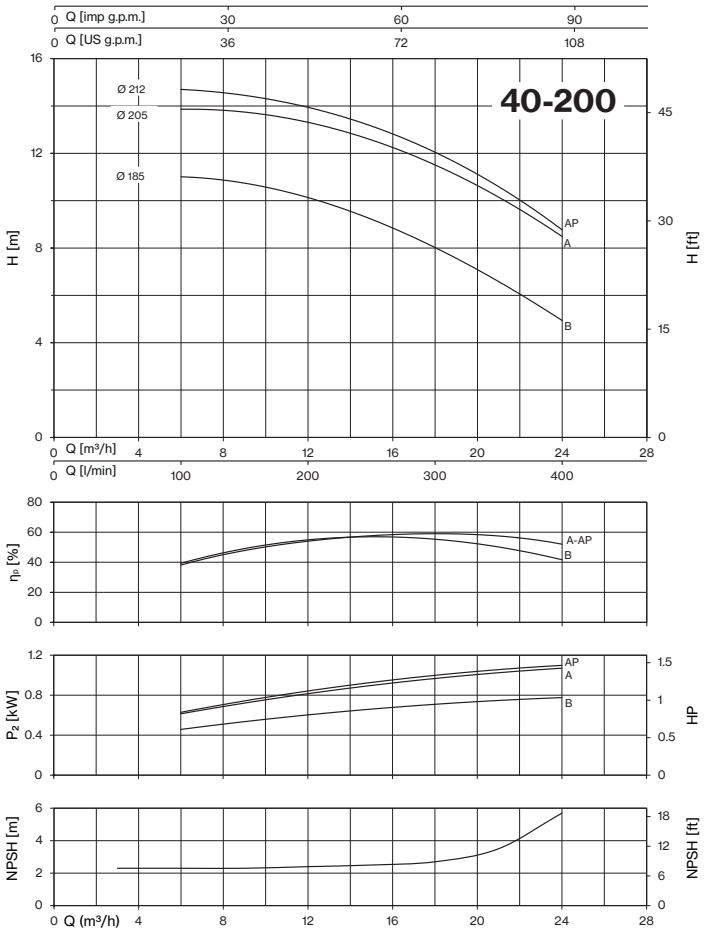


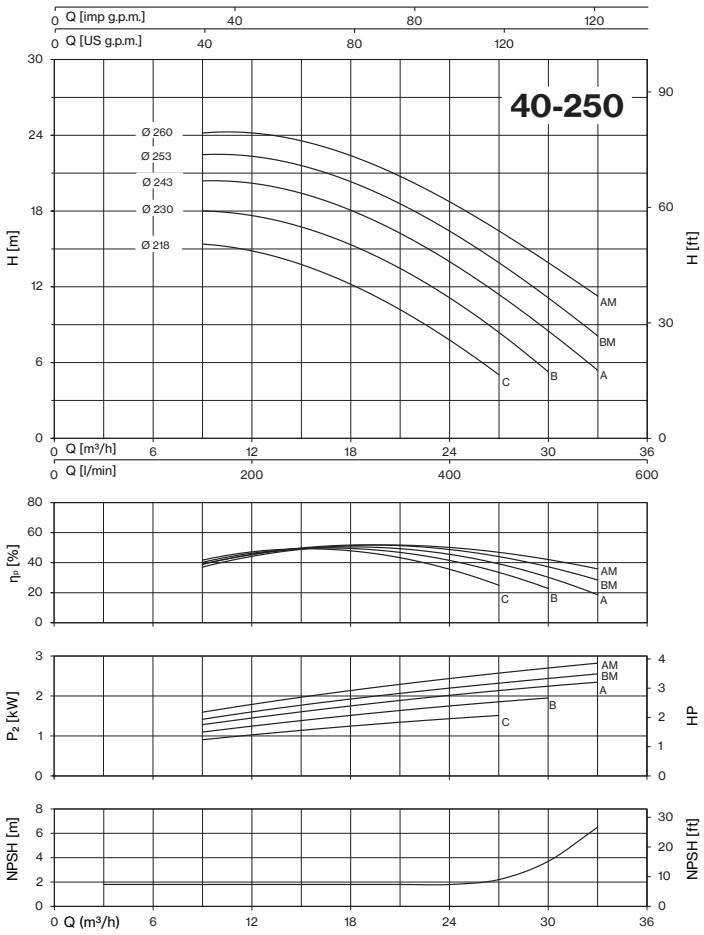


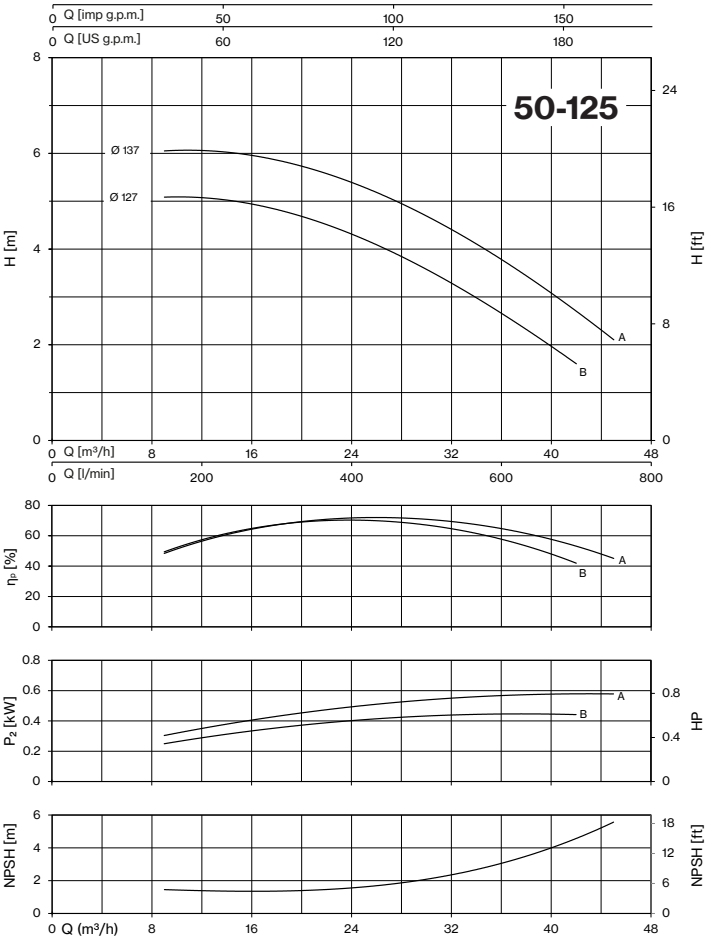




*Tolerance: ISO 9906:2012 - Grade 3B*

*Check pumps availability on pages 86-87-88*

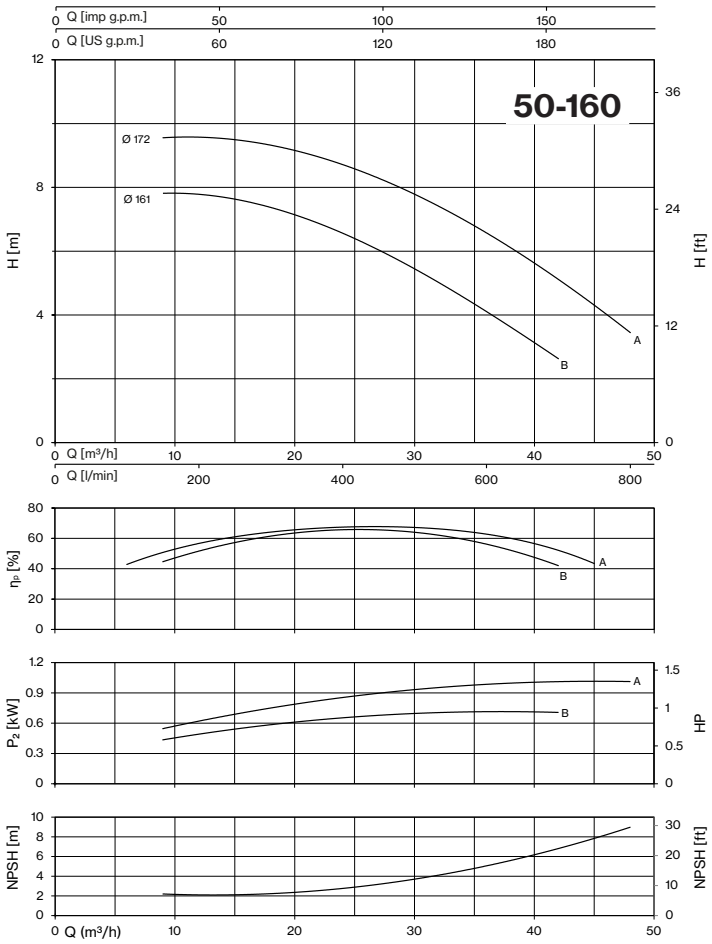


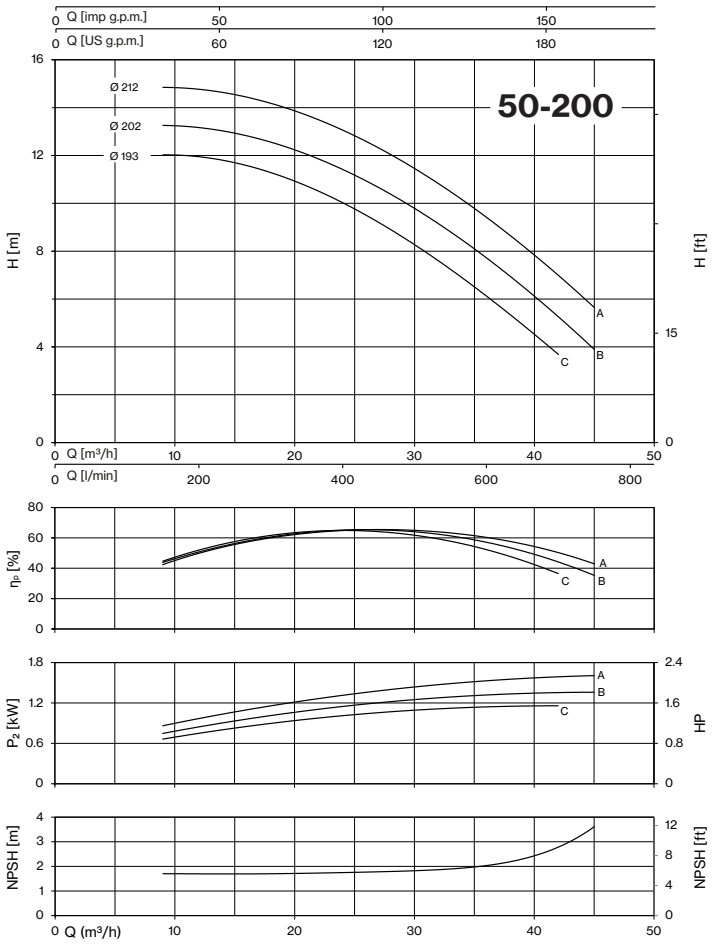


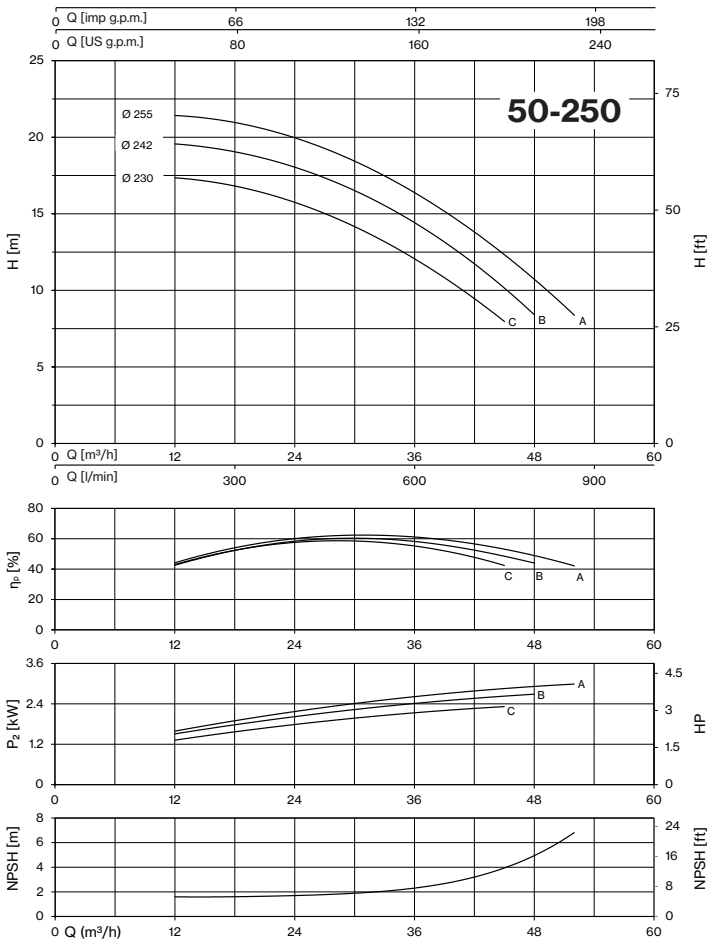


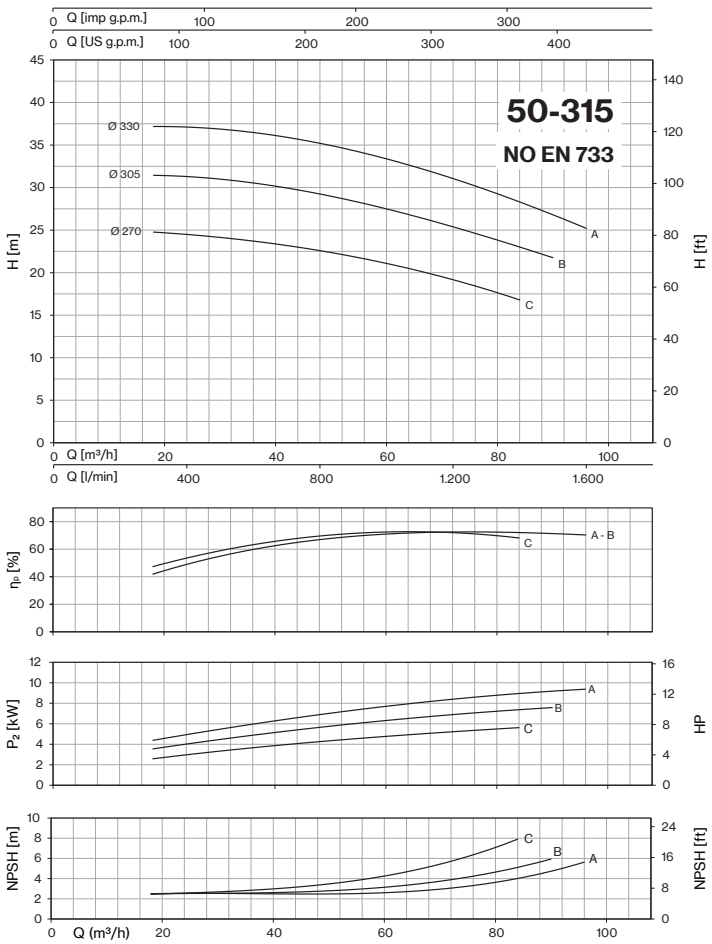


*Tolerance: ISO 9906:2012 - Grade 3B*
*Check pumps availability on pages 86-87-88*

# 4CA-4CAX ~ *EN 733*

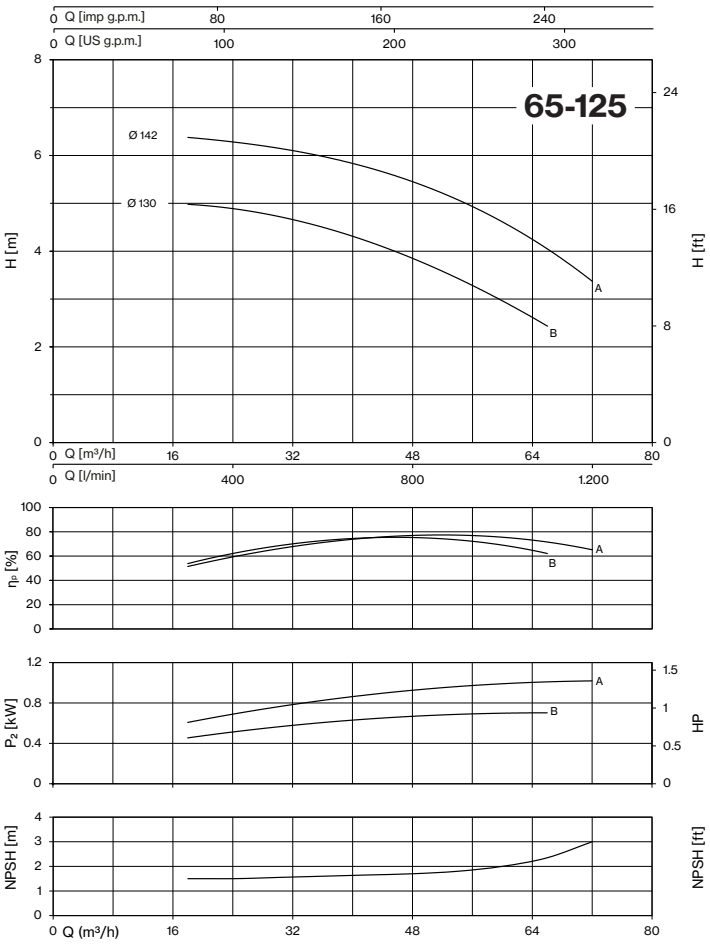


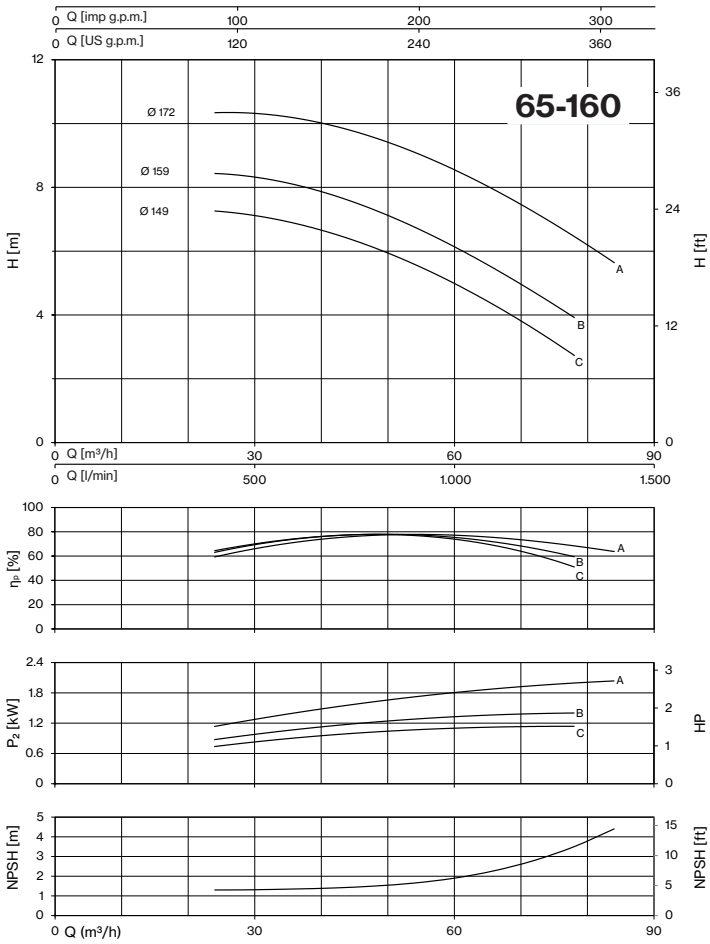


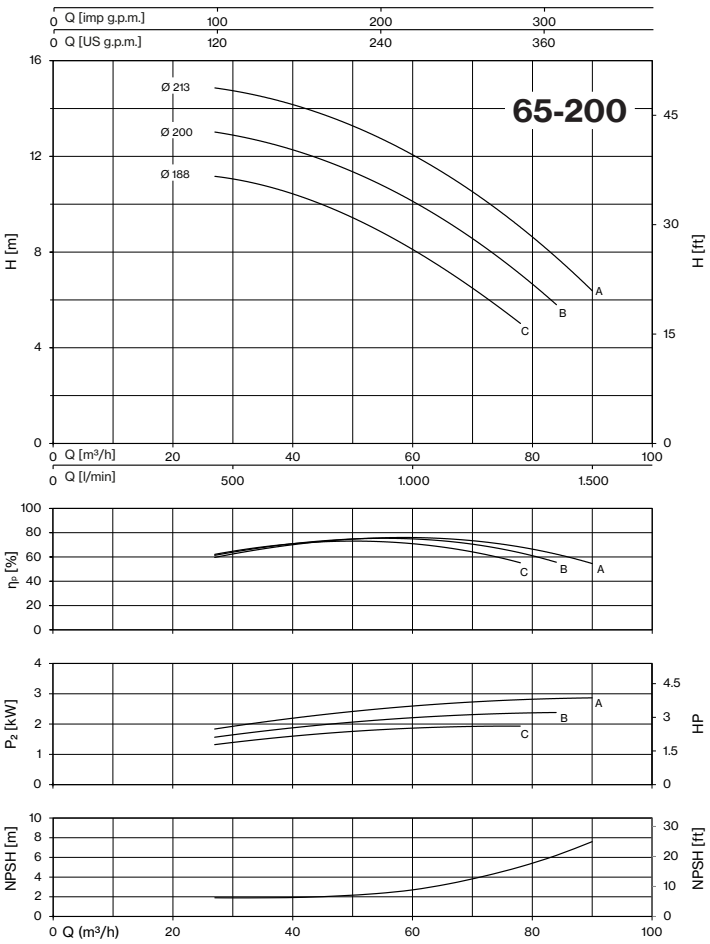


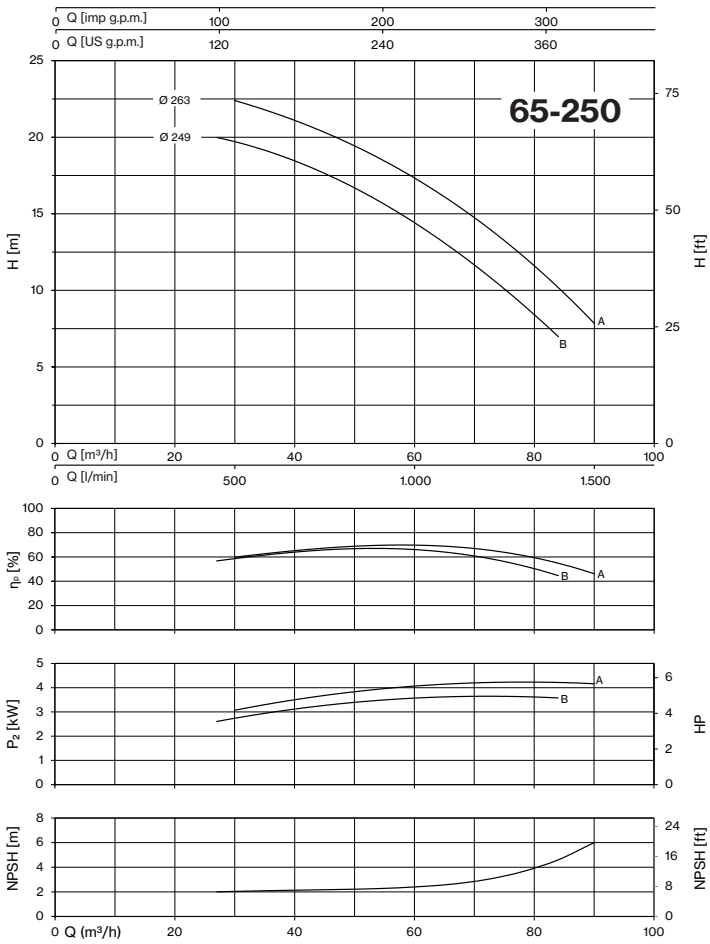




*Tolerance: ISO 9906:2012 - Grade 3B*

*Check pumps availability on pages 86-87-88*

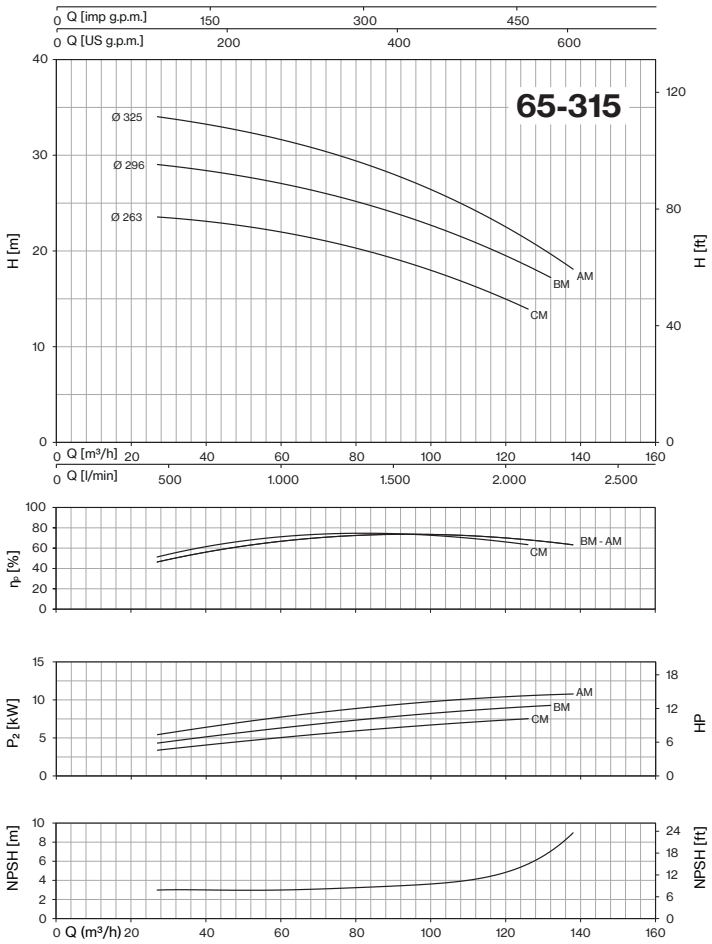
65-315
Q [imp g.p.m.]
Q [US g.p.m.]
H [m]
H [ft]
Ø 325
Ø 296
Ø 263
AM
BM
CM
Q [m³/h]
Q [l/min]
ηP [%]
BM - AM
P2 [kW]
HP
NPSH [m]
NPSH [ft]
Q (m³/h)

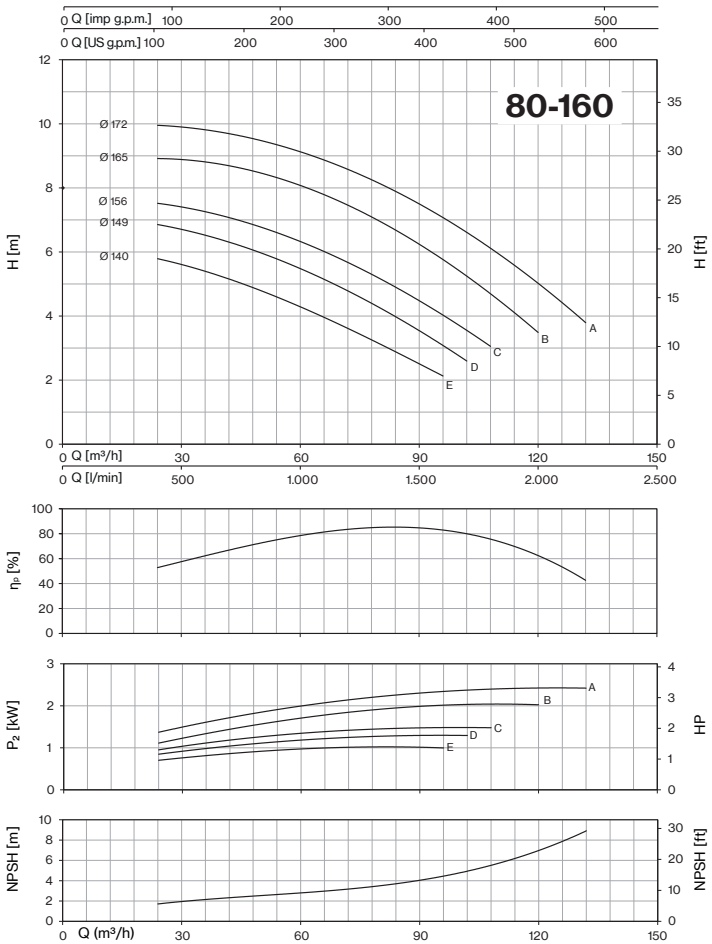
80-160
Q [imp g.p.m.]
Q [US g.p.m.]
H [m]
H [ft]
Ø 172
Ø 165
Ø 156
Ø 149
Ø 140
A
B
C
D
E
Q [m³/h]
Q [l/min]
ηP [%]
P2 [kW]
HP
NPSH [m]
NPSH [ft]
Q (m³/h)

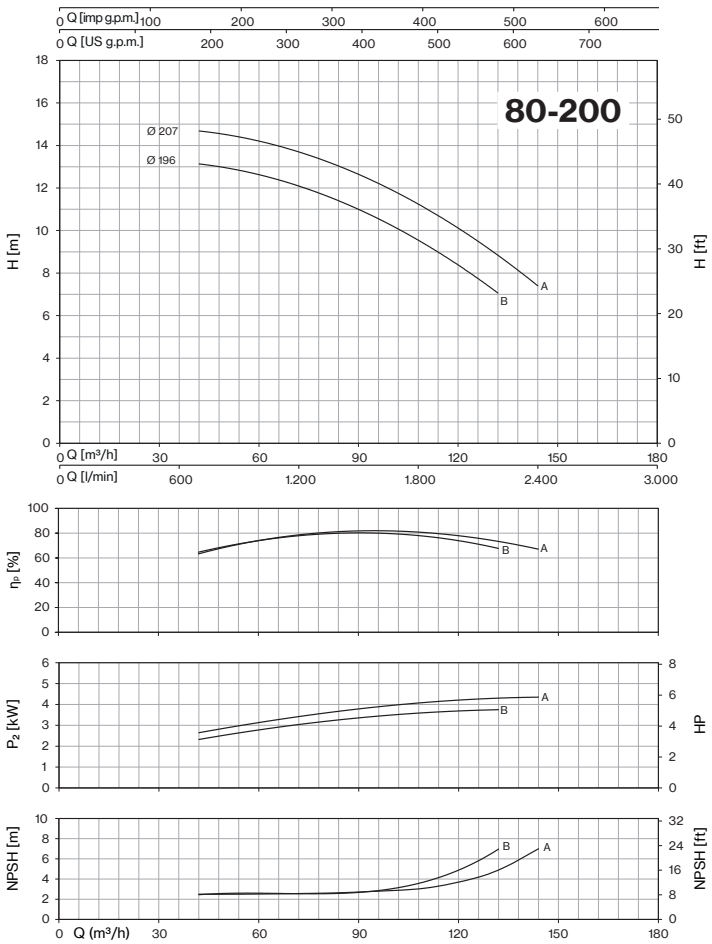
80-200
Q [imp g.p.m.]
Q [US g.p.m.]
H [m]
H [ft]
Ø 207
Ø 196
A
B
Q [m³/h]
Q [l/min]
ηP [%]
P2 [kW]
HP
NPSH [m]
NPSH [ft]
Q (m³/h)

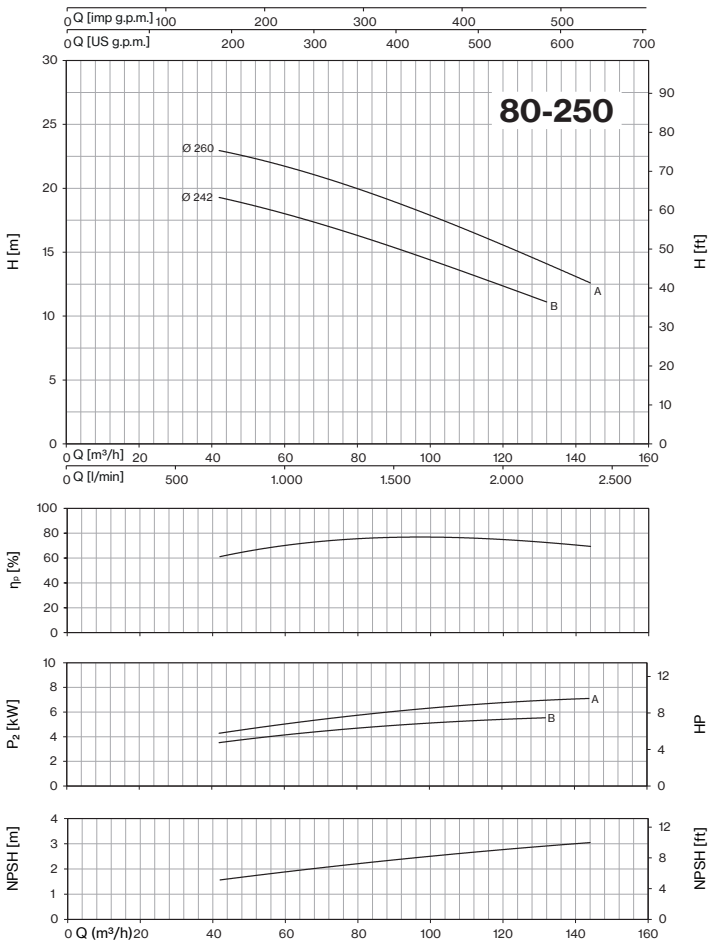
80-250
Q [imp g.p.m.]
Q [US g.p.m.]
H [m]
H [ft]
Ø 260
Ø 242
A
B
Q [m³/h]
Q [l/min]
ηP [%]
P2 [kW]
HP
NPSH [m]
NPSH [ft]
Q (m³/h)

# 4CA-4CAX ~ *EN 733*

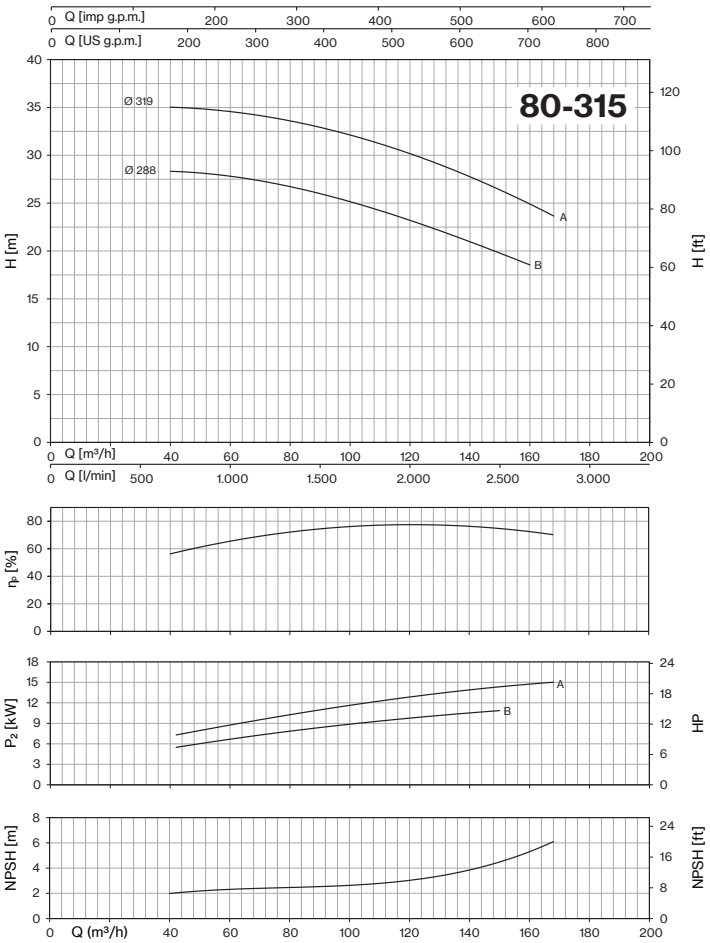


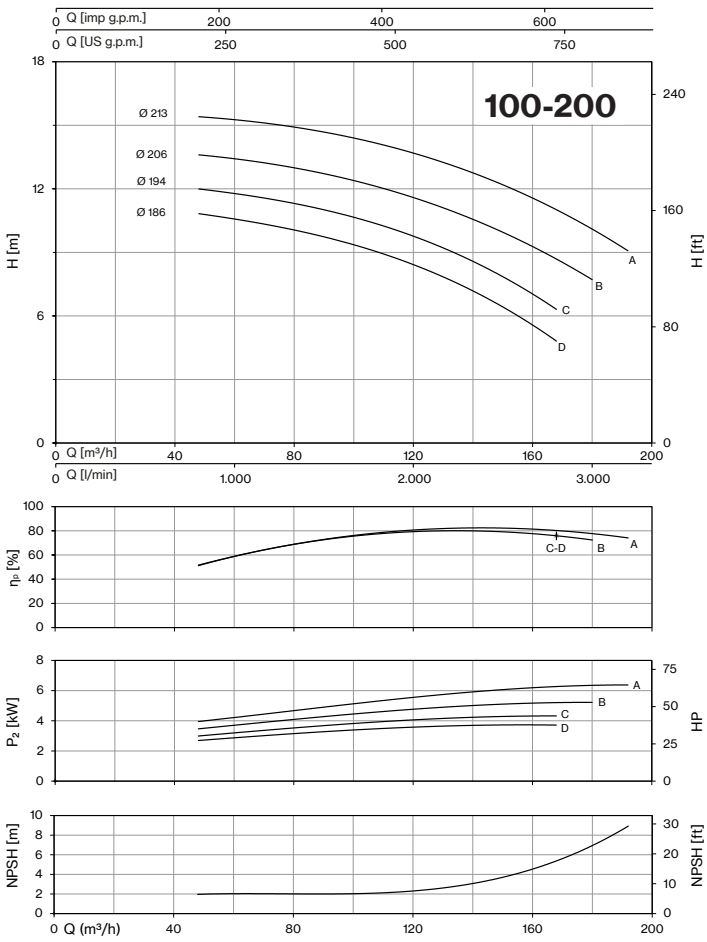


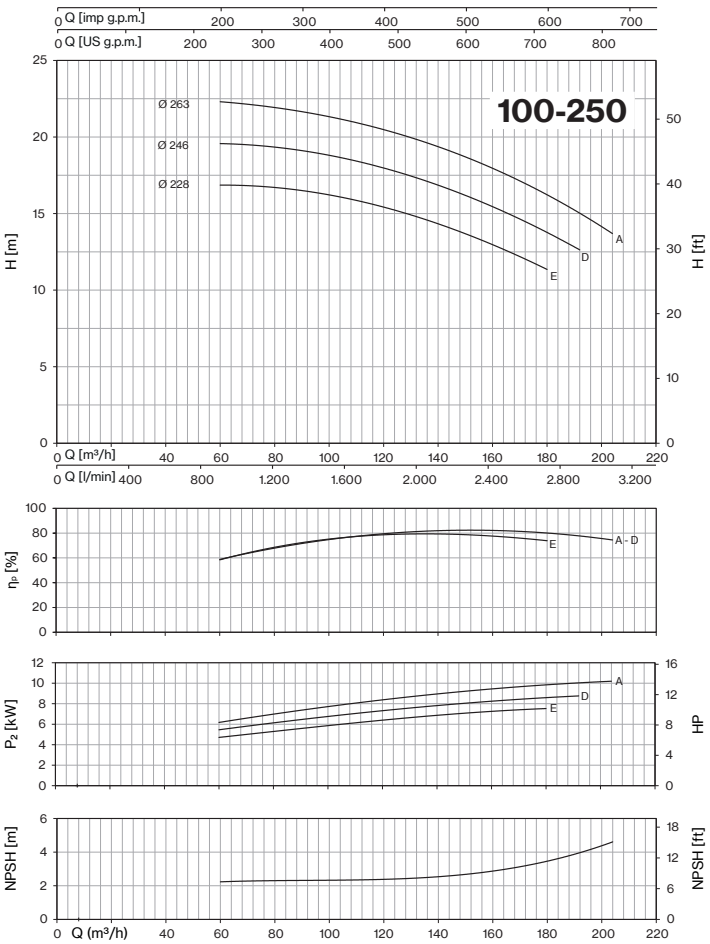


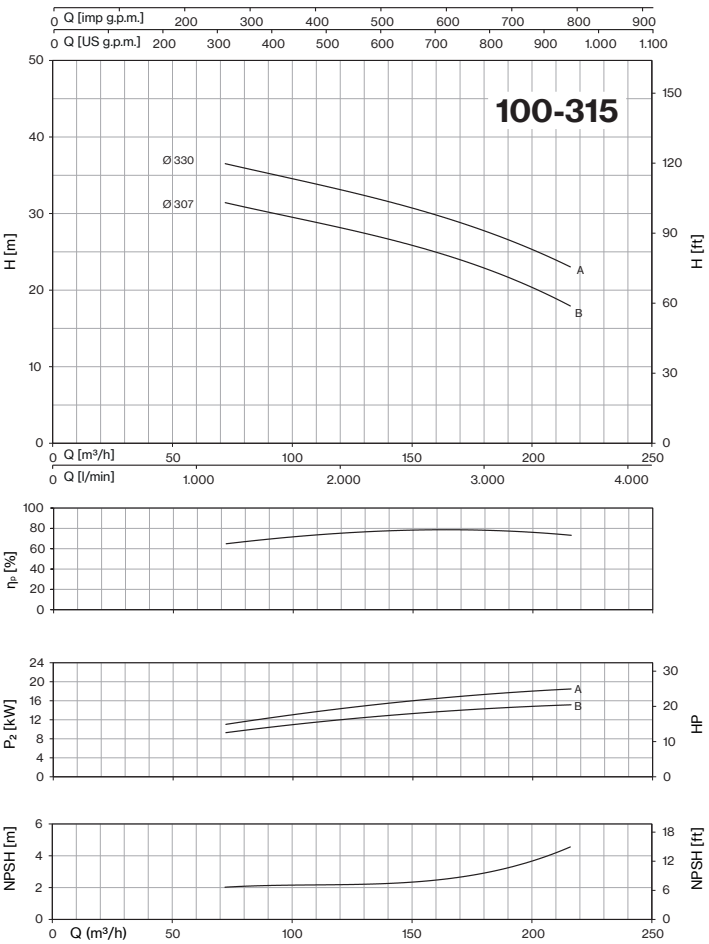




*Tolerance: ISO 9906:2012 - Grade 3B*

*Check pumps availability on pages 86-87-88*

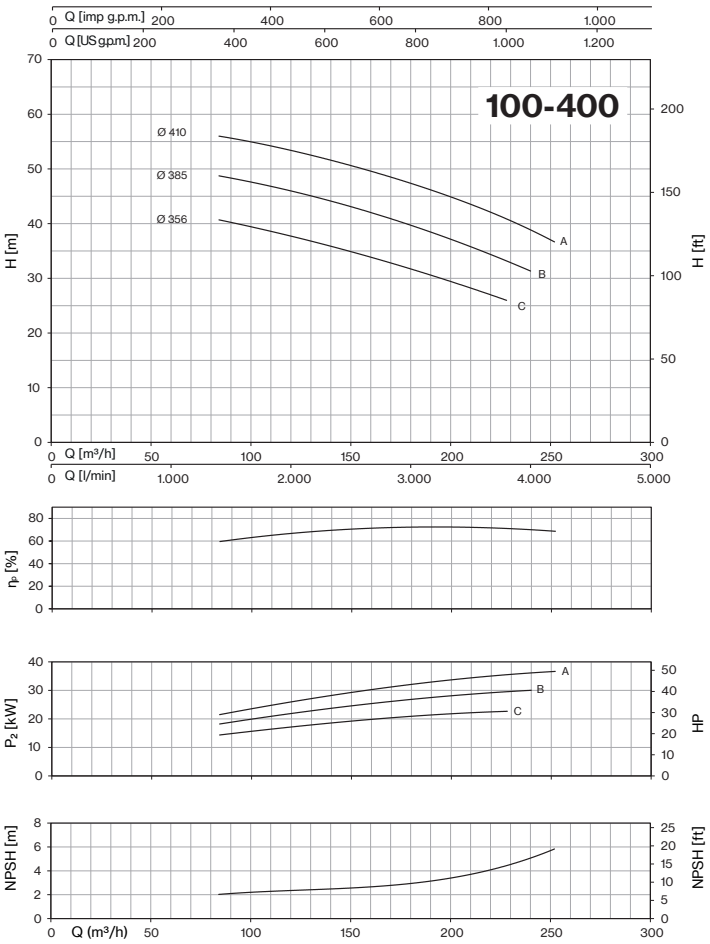


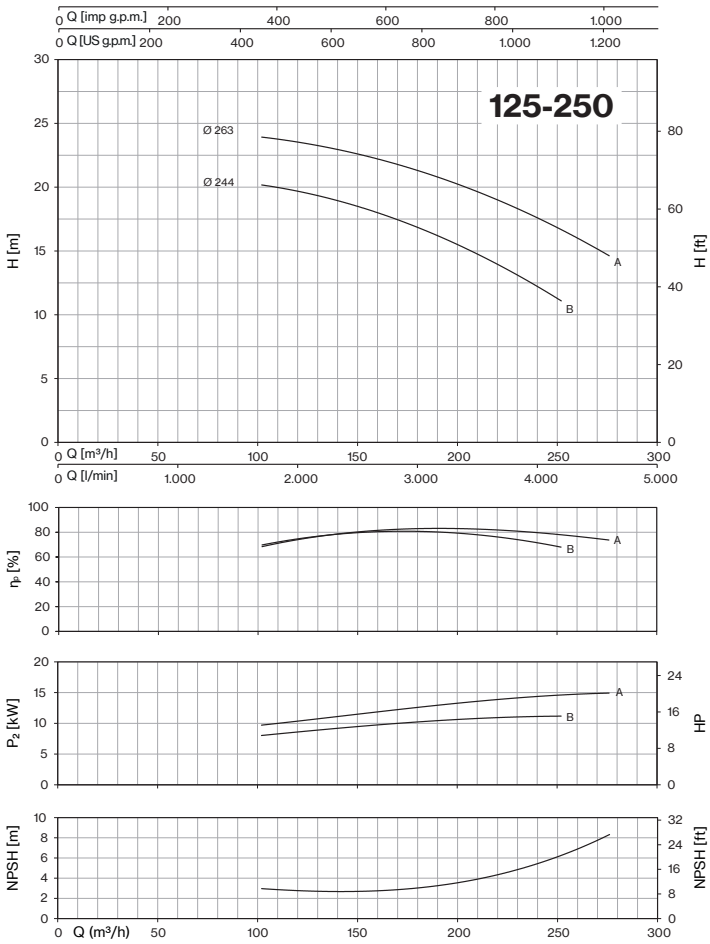


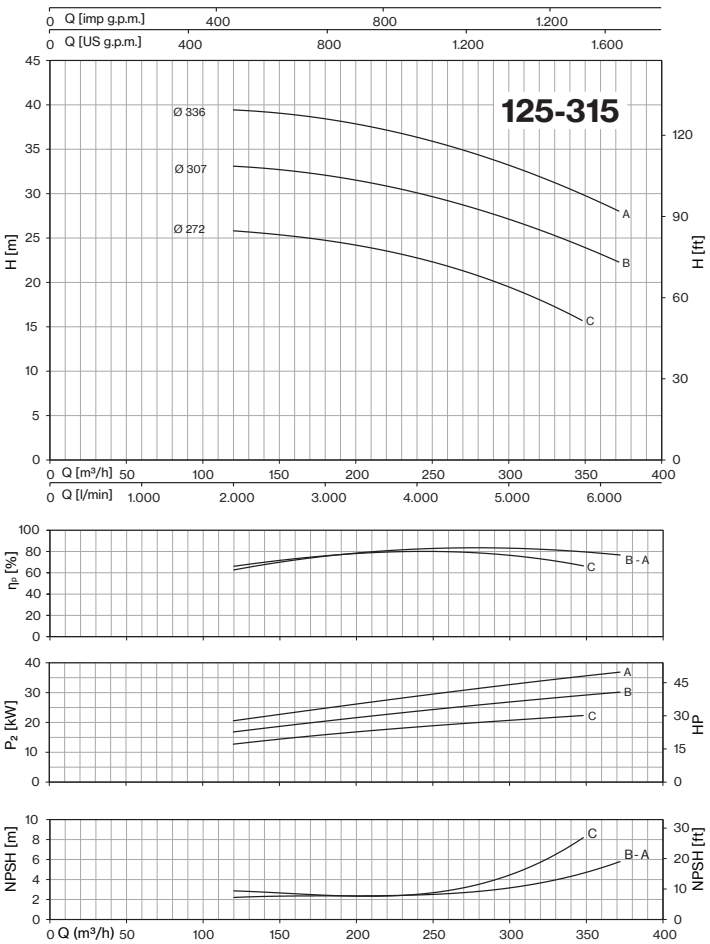


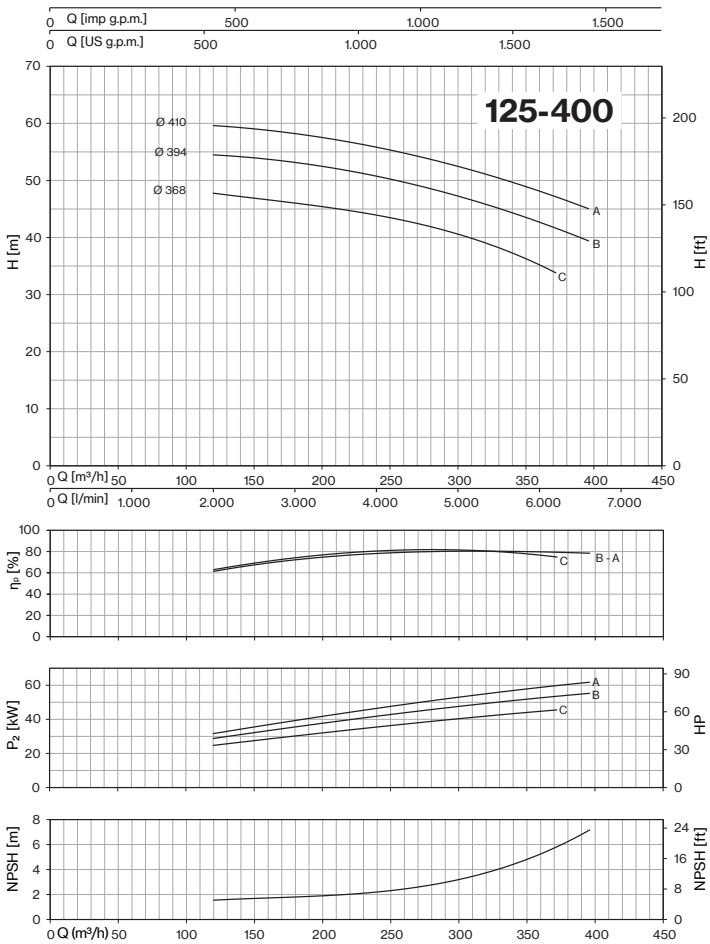


*Tolerance: ISO 9906:2012 - Grade 3B*

*Check pumps availability on pages 86-87-88*

# 4CA-4CAX ~ *EN 733*

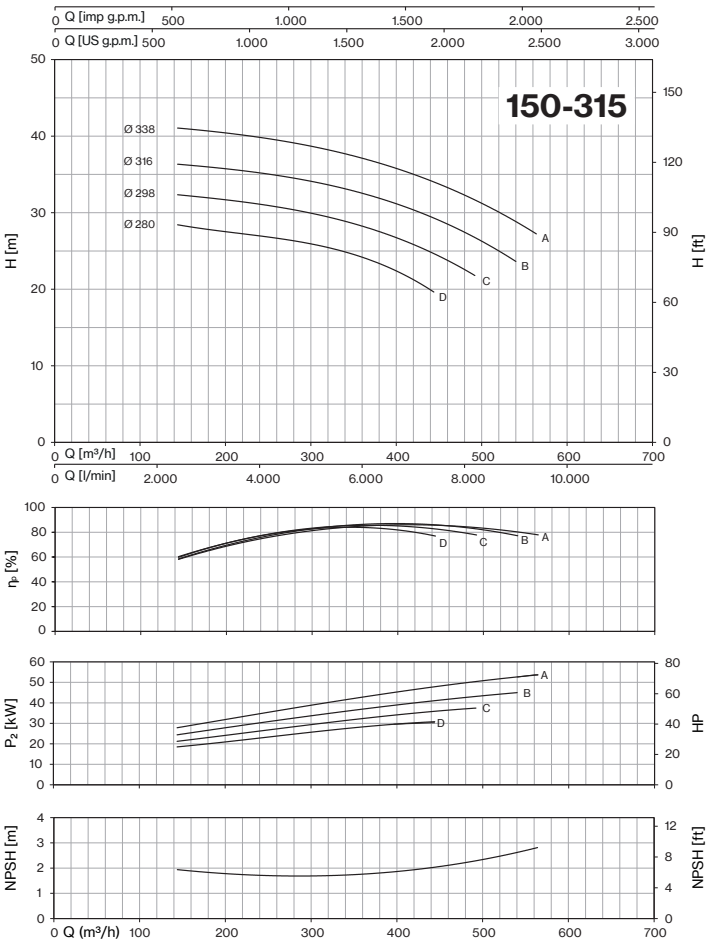


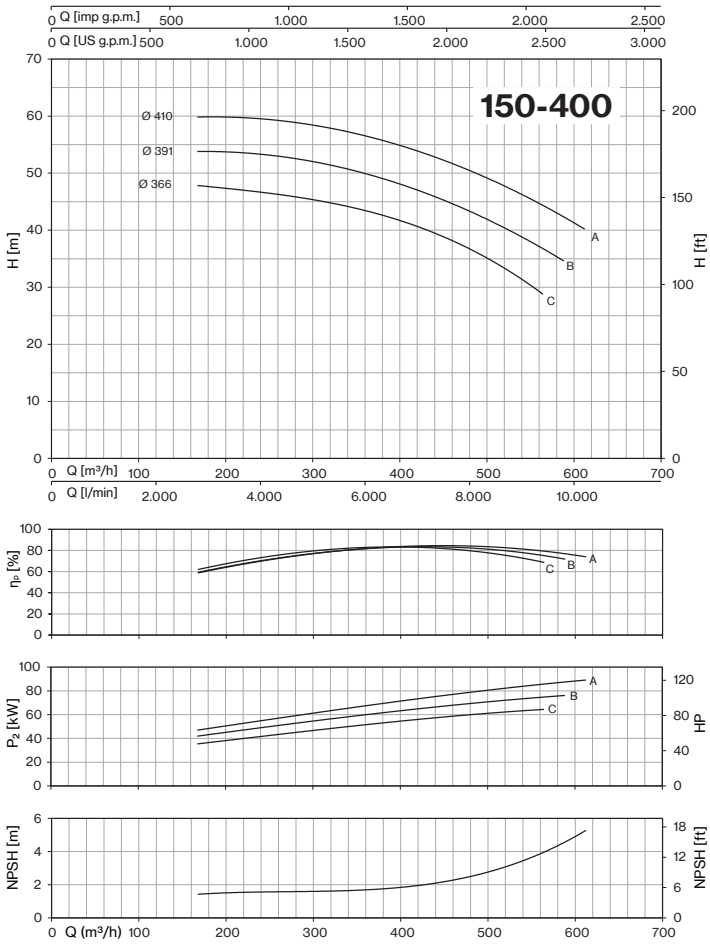


# 4CA-4CAX (No EN 733) ~ 1450 rpm

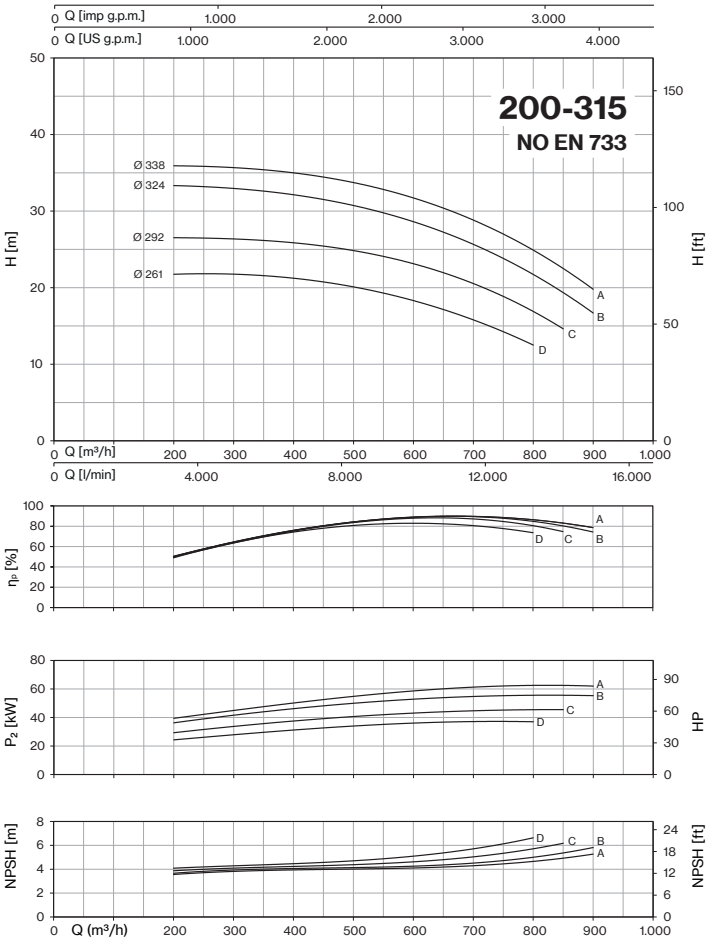


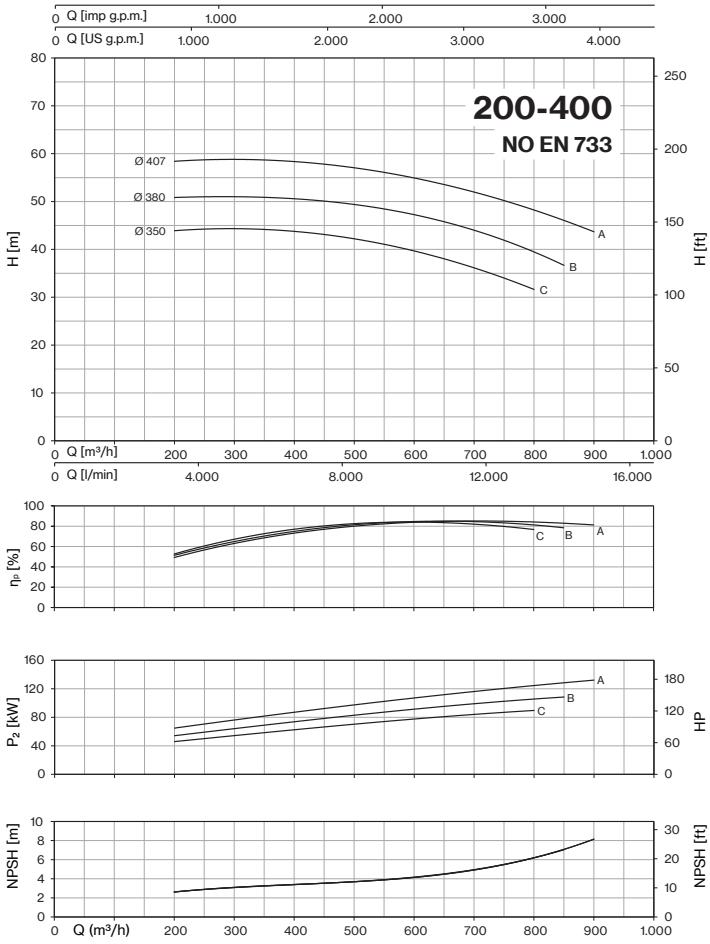




*Tolerance: ISO 9906:2012 - Grade 3B*

*Check pumps availability on pages 86-87-88*

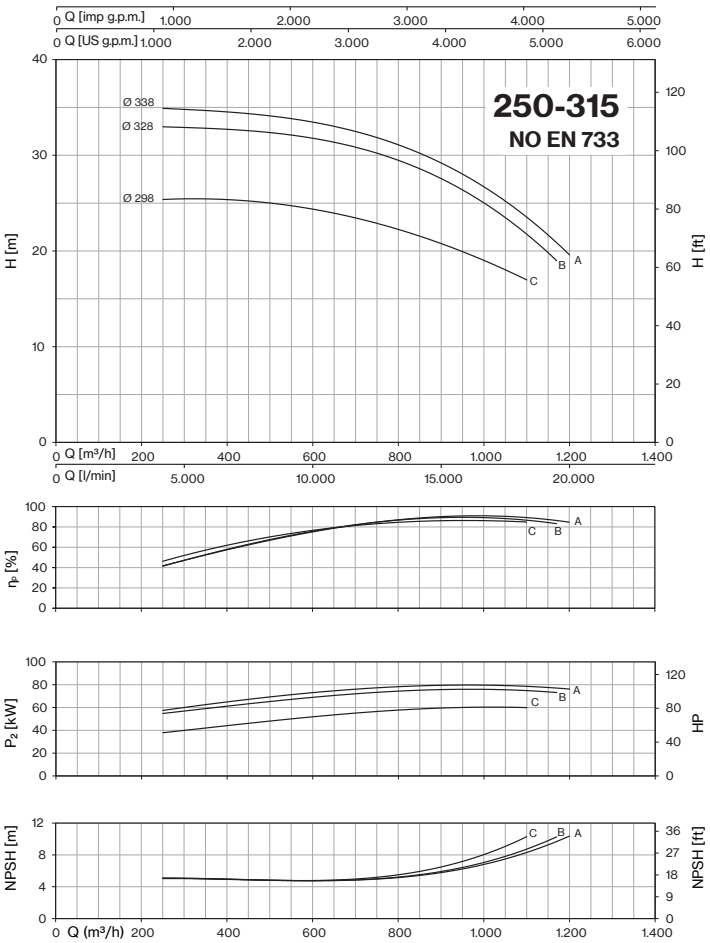
250-315
NO EN 733
Ø 338
Ø 328
Ø 298
A
B
C
Q [imp g.p.m.]
Q [US g.p.m.]
Q [m³/h]
Q [l/min]
H [m]
H [ft]
ηp [%]
P2 [kW]
HP
NPSH [m]
NPSH [ft]
Q (m³/h)

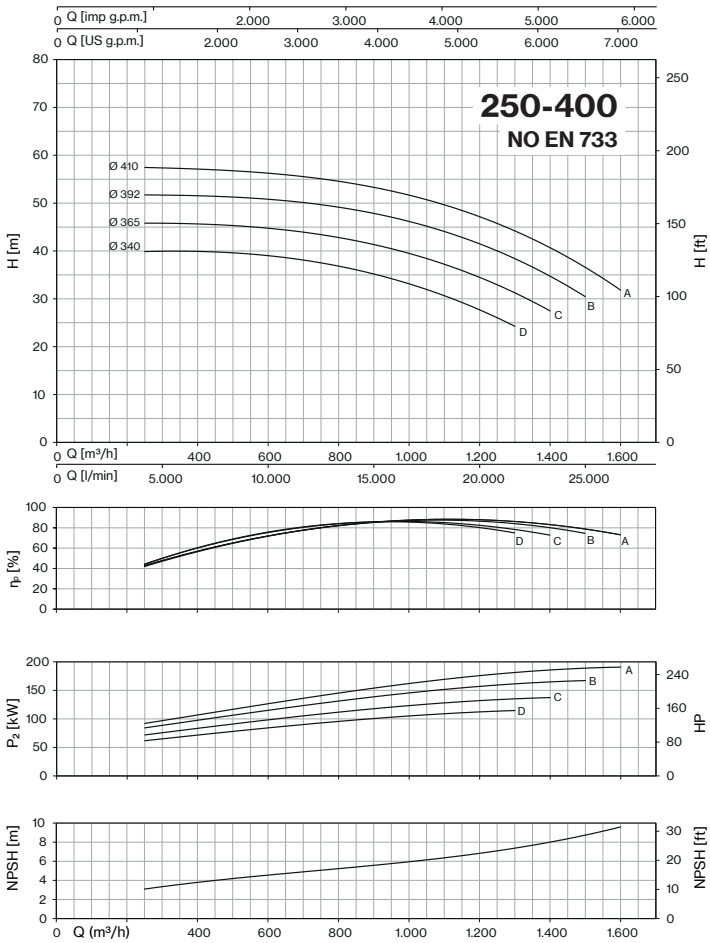
250-400
NO EN 733
Ø 410
Ø 392
Ø 365
Ø 340
A
B
C
D
Q [imp g.p.m.]
Q [US g.p.m.]
Q [m³/h]
Q [l/min]
H [m]
H [ft]
ηp [%]
P2 [kW]
HP
NPSH [m]
NPSH [ft]
Q (m³/h)

# CM ~ *EN 733*

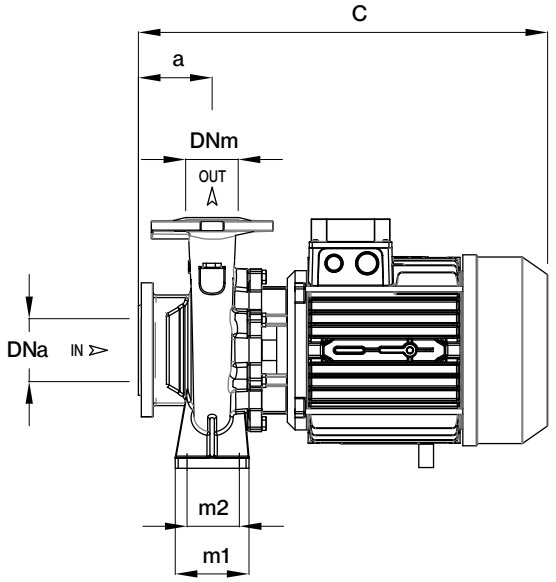


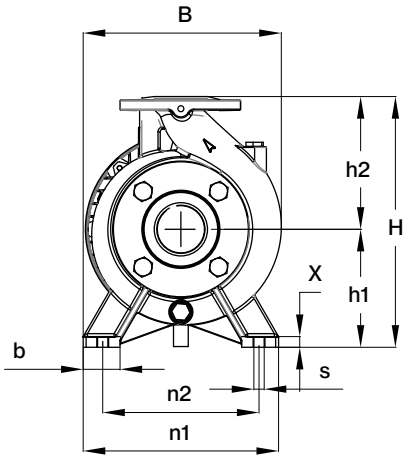


| TYPE | | MEC | DIMENSIONS (mm) | | | | | | | | | | | | | | | | | | Kg | |
|---|---|---|---|---|---|---|---|---|---|---|---|---|---|---|---|---|---|---|---|---|---|---|
| ~1 | ~3 | | a | h1 | h2 | m1 | m2 | n1 | n2 | b | x | s | C | B | H | DNA | DNM | l | L | M | ~1 | ~3 |
| **32-160C** | **32-160C** | 90 | 80 | 132 | 160 | 100 | 70 | 240 | 190 | 50 | 12 | 14 | 495 | 240 | 292 | | | 551 | 250 | 341 | 35,5 | 35,5 |
| **32-160B** | **32-160B** | 90 | 80 | 132 | 160 | 100 | 70 | 240 | 190 | 50 | 12 | 14 | 495 | 240 | 292 | | | 551 | 250 | 341 | 38,5 | 38,5 |
| **-** | **32-160A** | 90 | 80 | 132 | 160 | 100 | 70 | 240 | 190 | 50 | 12 | 14 | 495 | 240 | 292 | | | 551 | 250 | 341 | - | 41,5 |
| **32-200C** | **-** | 112 | 80 | 160 | 180 | 100 | 70 | 240 | 190 | 50 | 12 | 14 | 543 | 268 | 340 | | | 602 | 263 | 395 | 60 | - |
| **-** | **32-200C** | 100 | 80 | 160 | 180 | 100 | 70 | 240 | 190 | 50 | 12 | 14 | 499 | 268 | 340 | | | 602 | 263 | 395 | - | 51 |
| **-** | **32-200B1** | 112 | 80 | 160 | 180 | 100 | 70 | 240 | 190 | 50 | 12 | 14 | 543 | 268 | 340 | | | 627 | 287 | 408 | - | 60 |
| **-** | **32-200B** | 132 | 80 | 160 | 180 | 100 | 70 | 240 | 190 | 50 | 12 | 14 | 532 | 268 | 340 | 50 | 32 | 627 | 287 | 408 | - | 66,5 |
| **-** | **32-200A1** | 112 | 80 | 160 | 180 | 100 | 70 | 240 | 190 | 50 | 12 | 14 | 543 | 268 | 340 | | | 627 | 287 | 408 | - | 66,5 |
| **-** | **32-200A** | 132 | 80 | 160 | 180 | 100 | 70 | 240 | 190 | 50 | 12 | 14 | 532 | 268 | 340 | | | 627 | 287 | 408 | - | 73,5 |
| **-** | **32-250C** | 132 | 100 | 180 | 225 | 125 | 95 | 320 | 250 | 65 | 12 | 14 | 591 | 305 | 405 | | | 666 | 346 | 471 | - | 96 |
| **-** | **32-250B** | 132 | 100 | 180 | 225 | 125 | 95 | 320 | 250 | 65 | 14 | 14 | 591 | 305 | 405 | | | 666 | 346 | 471 | - | 100 |
| **-** | **32-250A1** | 132 | 100 | 180 | 225 | 125 | 95 | 320 | 250 | 65 | 14 | 14 | 634 | 305 | 405 | | | 810 | 354 | 480 | - | 104,5 |
| **-** | **32-250A** | 160 | 100 | 180 | 225 | 125 | 95 | 320 | 250 | 65 | 14 | 14 | 674 | 305 | 405 | | | 810 | 354 | 480 | - | 130 |
| **40-125C** | **40-125C** | 90 | 80 | 112 | 140 | 100 | 70 | 210 | 160 | 50 | 12 | 14 | 492 | 220 | 252 | | | 551 | 250 | 341 | 35 | 35 |
| **40-125B** | **40-125B** | 90 | 80 | 112 | 140 | 100 | 70 | 210 | 160 | 50 | 12 | 14 | 492 | 220 | 252 | | | 551 | 250 | 341 | 37,5 | 37,5 |
| **-** | **40-125A** | 90 | 80 | 112 | 140 | 100 | 70 | 210 | 160 | 50 | 12 | 14 | 492 | 220 | 252 | | | 551 | 250 | 341 | - | 41 |
| **40-160B** | **-** | 100 | 80 | 132 | 160 | 100 | 70 | 240 | 190 | 50 | 12 | 14 | 500 | 245 | 292 | | | 551 | 250 | 341 | 49,5 | - |
| | **40-160B** | 100 | 80 | 132 | 160 | 100 | 70 | 240 | 190 | 50 | 12 | 14 | 500 | 245 | 292 | | | 551 | 250 | 341 | - | 45,5 |
| **40-160A** | **-** | 112 | 80 | 132 | 160 | 100 | 70 | 240 | 190 | 50 | 15 | 14 | 544 | 245 | 292 | | | 602 | 263 | 395 | 58 | - |
| **-** | **40-160A** | 100 | 80 | 132 | 160 | 100 | 70 | 240 | 190 | 50 | 15 | 14 | 500 | 245 | 292 | | | 602 | 263 | 395 | - | 50 |
| **-** | **40-160AP** | 112 | 80 | 132 | 160 | 100 | 70 | 240 | 190 | 50 | 15 | 14 | 544 | 245 | 292 | | | 627 | 287 | 408 | - | 56,5 |
| **-** | **40-200B1** | 112 | 100 | 160 | 180 | 100 | 70 | 265 | 212 | 50 | 15 | 14 | 563 | 273 | 340 | | | 627 | 287 | 408 | - | 61,5 |
| **-** | **40-200B** | 132 | 100 | 160 | 180 | 100 | 70 | 265 | 212 | 50 | 15 | 14 | 552 | 273 | 340 | 65 | 40 | 627 | 287 | 408 | - | 68 |
| **-** | **40-200A1** | 112 | 100 | 160 | 180 | 100 | 70 | 265 | 212 | 50 | 15 | 14 | 563 | 273 | 340 | | | 627 | 287 | 408 | - | 67,5 |
| **-** | **40-200A** | 132 | 100 | 160 | 180 | 100 | 70 | 265 | 212 | 50 | 15 | 14 | 552 | 273 | 340 | | | 627 | 287 | 408 | - | 74,5 |
| **-** | **40-200AP** | 132 | 100 | 160 | 180 | 100 | 70 | 265 | 212 | 50 | 15 | 14 | 590 | 273 | 340 | | | 666 | 346 | 471 | - | 87 |
| **-** | **40-250C** | 132 | 100 | 180 | 225 | 125 | 95 | 320 | 250 | 65 | 15 | 14 | 590 | 322 | 405 | | | 666 | 346 | 471 | - | 94 |
| **-** | **40-250B** | 132 | 100 | 180 | 225 | 125 | 95 | 320 | 250 | 65 | 15 | 14 | 590 | 322 | 405 | | | 666 | 346 | 471 | - | 98,5 |
| **-** | **40-250A1** | 132 | 100 | 180 | 225 | 125 | 95 | 320 | 250 | 65 | 15 | 14 | 634 | 322 | 405 | | | 810 | 354 | 480 | - | 103 |
| **-** | **40-250A** | 160 | 100 | 180 | 225 | 125 | 95 | 320 | 250 | 65 | 15 | 14 | 670 | 322 | 405 | | | 810 | 354 | 480 | - | 128,5 |
| **-** | **40-250BM** | 132 | 100 | 180 | 225 | 125 | 95 | 320 | 250 | 65 | 15 | 14 | 670 | 332 | 405 | | | 810 | 354 | 480 | - | 143,5 |
| **-** | **40-250AM** | 160 | 100 | 180 | 225 | 125 | 95 | 320 | 250 | 65 | 15 | 14 | 670 | 332 | 405 | | | 810 | 354 | 480 | - | 154 |
| **50-125B** | **-** | 100 | 100 | 132 | 160 | 100 | 70 | 240 | 190 | 50 | 12 | 14 | 530 | 250 | 292 | | | 602 | 263 | 395 | 50 | - |
| **-** | **50-125B** | 100 | 100 | 132 | 160 | 100 | 70 | 240 | 190 | 50 | 12 | 14 | 530 | 250 | 292 | | | 602 | 263 | 395 | - | 46 |
| **50-125A** | **-** | 112 | 100 | 132 | 160 | 100 | 70 | 240 | 190 | 50 | 12 | 14 | 575 | 250 | 292 | | | 602 | 263 | 395 | 58 | - |
| **-** | **50-125A** | 100 | 100 | 132 | 160 | 100 | 70 | 240 | 190 | 50 | 12 | 14 | 530 | 250 | 292 | | | 602 | 263 | 395 | - | 50 |
| **-** | **50-160B1** | 112 | 100 | 160 | 180 | 100 | 70 | 265 | 212 | 50 | 12 | 14 | 564 | 270 | 340 | | | 627 | 287 | 408 | - | 61 |
| **-** | **50-160B** | 132 | 100 | 160 | 180 | 100 | 70 | 265 | 212 | 50 | 12 | 14 | 553 | 270 | 340 | 65 | 50 | 627 | 287 | 408 | - | 67 |
| **-** | **50-160A1** | 112 | 100 | 160 | 180 | 100 | 70 | 265 | 212 | 50 | 12 | 14 | 564 | 270 | 340 | | | 627 | 287 | 408 | - | 67 |
| **-** | **50-160A** | 132 | 100 | 160 | 180 | 100 | 70 | 265 | 212 | 50 | 12 | 14 | 553 | 270 | 340 | | | 627 | 287 | 408 | - | 73,5 |
| **-** | **50-200C** | 132 | 100 | 160 | 200 | 100 | 70 | 265 | 215 | 50 | 12 | 14 | 596 | 290 | 360 | | | 666 | 346 | 471 | - | 90,5 |
| **-** | **50-200B** | 132 | 100 | 160 | 200 | 100 | 70 | 265 | 215 | 50 | 12 | 14 | 596 | 290 | 360 | | | 666 | 346 | 471 | - | 95 |
| **-** | **50-200A1** | 132 | 100 | 160 | 200 | 100 | 70 | 265 | 215 | 50 | 12 | 14 | 638 | 290 | 360 | | | 810 | 354 | 480 | - | 99,5 |
| **-** | **50-200A** | 160 | 100 | 160 | 200 | 100 | 70 | 265 | 215 | 50 | 12 | 14 | 675 | 290 | 360 | | | 810 | 354 | 480 | - | 125 |

| TYPE | | MEC | DIMENSIONS (mm) | | | | | | | | | | | | | | | | | | Kg | |
|---|---|---|---|---|---|---|---|---|---|---|---|---|---|---|---|---|---|---|---|---|---|---|
| ~1 | ~3 | | a | h1 | h2 | m1 | m2 | n1 | n2 | b | x | s | C | B | H | DNA | DNM | I | L | M | ~1 | ~3 |
| - | **50-250C1** | 132 | 100 | 180 | 225 | 125 | 95 | 320 | 250 | 65 | 14 | 14 | 639 | 332 | 405 | 65 | 50 | 810 | 354 | 480 | - | 106 |
| - | **50-250C** | 160 | 100 | 180 | 225 | 125 | 95 | 320 | 250 | 65 | 14 | 14 | 675 | 332 | 405 | | | 810 | 354 | 480 | - | 131,5 |
| - | **50-250B** | 160 | 100 | 180 | 225 | 125 | 95 | 320 | 250 | 65 | 14 | 14 | 719 | 332 | 405 | | | 810 | 354 | 480 | - | 146,5 |
| - | **50-250A** | 160 | 100 | 180 | 225 | 125 | 95 | 320 | 250 | 65 | 14 | 14 | 719 | 332 | 405 | | | 810 | 354 | 480 | - | 156,5 |
| - | **65-125B1** | 112 | 100 | 160 | 180 | 125 | 95 | 280 | 212 | 65 | 14 | 14 | 575 | 280 | 340 | 80 | 65 | 627 | 287 | 408 | - | 60,5 |
| - | **65-125B** | 132 | 100 | 160 | 180 | 125 | 95 | 280 | 212 | 65 | 14 | 14 | 562 | 280 | 340 | | | 627 | 287 | 408 | - | 67 |
| - | **65-125A1** | 112 | 100 | 160 | 180 | 125 | 95 | 280 | 212 | 65 | 14 | 14 | 575 | 280 | 340 | | | 627 | 287 | 408 | - | 67 |
| - | **65-125A** | 132 | 100 | 160 | 180 | 125 | 95 | 280 | 212 | 65 | 14 | 14 | 565 | 280 | 340 | | | 627 | 287 | 408 | - | 73,5 |
| - | **65-160C** | 132 | 100 | 160 | 200 | 125 | 95 | 280 | 212 | 65 | 14 | 14 | 596 | 290 | 360 | | | 666 | 346 | 471 | - | 90 |
| - | **65-160B** | 132 | 100 | 160 | 200 | 125 | 95 | 280 | 212 | 65 | 14 | 14 | 600 | 290 | 360 | | | 666 | 346 | 471 | - | 94 |
| - | **65-160A1** | 132 | 100 | 160 | 200 | 125 | 95 | 280 | 212 | 65 | 14 | 14 | 639 | 290 | 360 | | | 810 | 354 | 480 | - | 98 |
| - | **65-160A** | 160 | 100 | 160 | 200 | 125 | 95 | 280 | 212 | 65 | 14 | 14 | 675 | 290 | 360 | | | 810 | 354 | 480 | - | 125,5 |
| - | **65-200C1** | 132 | 100 | 180 | 225 | 125 | 95 | 320 | 250 | 65 | 14 | 14 | 638 | 330 | 405 | | | 810 | 354 | 480 | - | 103,5 |
| - | **65-200C** | 160 | 100 | 180 | 225 | 125 | 95 | 320 | 250 | 65 | 14 | 14 | 675 | 330 | 405 | | | 810 | 354 | 480 | - | 129 |
| - | **65-200B** | 160 | 100 | 180 | 225 | 125 | 95 | 320 | 250 | 65 | 14 | 14 | 719 | 330 | 405 | | | 810 | 354 | 480 | - | 143,5 |
| - | **65-200A** | 160 | 100 | 180 | 225 | 125 | 95 | 320 | 250 | 65 | 14 | 14 | 719 | 330 | 405 | | | 810 | 354 | 480 | - | 154 |
| - | **65-250B** | 180 | 100 | 200 | 250 | 160 | 120 | 360 | 280 | 80 | 16 | 19 | 770 | 370 | 450 | | | 920 | 420 | 625 | - | 194 |
| - | **65-250A** | 180 | 100 | 200 | 250 | 160 | 120 | 360 | 280 | 80 | 16 | 19 | 811 | 370 | 450 | | | 920 | 420 | 625 | - | 216,5 |
| - | **80-160E** | 132 | 125 | 180 | 225 | 125 | 95 | 320 | 250 | 65 | 14 | 14 | 621 | 330 | 405 | 100 | 80 | 810 | 354 | 480 | - | 98,5 |
| - | **80-160D** | 132 | 125 | 180 | 225 | 125 | 95 | 320 | 250 | 65 | 14 | 14 | 621 | 330 | 405 | | | 810 | 354 | 480 | - | 102,5 |
| - | **80-160C1** | 132 | 125 | 180 | 225 | 125 | 95 | 320 | 250 | 65 | 14 | 14 | 664 | 330 | 405 | | | 810 | 354 | 480 | - | 106,5 |
| - | **80-160C** | 160 | 125 | 180 | 225 | 125 | 95 | 320 | 250 | 65 | 14 | 14 | 700 | 330 | 405 | | | 810 | 354 | 480 | - | 131,5 |
| - | **80-160B** | 160 | 125 | 180 | 225 | 125 | 95 | 320 | 250 | 65 | 14 | 14 | 744 | 330 | 405 | | | 810 | 354 | 480 | - | 146 |
| - | **80-160A** | 160 | 125 | 180 | 225 | 125 | 95 | 320 | 250 | 65 | 14 | 14 | 744 | 330 | 405 | | | 810 | 354 | 480 | - | 156,5 |
| - | **80-200B** | 180 | 125 | 180 | 250 | 125 | 95 | 345 | 280 | 65 | 16 | 14 | 796 | 355 | 430 | | | 920 | 420 | 625 | - | 188,5 |
| - | **80-200A** | 180 | 125 | 180 | 250 | 125 | 95 | 345 | 280 | 65 | 16 | 14 | 835 | 355 | 430 | | | 920 | 420 | 625 | - | 210,5 |
| - | **100-160B** | 180 | 125 | 200 | 280 | 160 | 120 | 360 | 280 | 80 | 18 | 18 | 795 | 390 | 480 | 125 | 100 | 920 | 420 | 625 | - | 196,5 |
| - | **100-160A** | 180 | 125 | 200 | 280 | 160 | 120 | 360 | 280 | 80 | 18 | 18 | 836 | 390 | 480 | | | 920 | 420 | 625 | - | 221 |

| DIMENSIONS (mm) | | | | |
|---|---|---|---|---|
| DN | D | K | holes | |
| | | | n° | Ø |
| 32 | 140 | 100 | 4 | 18 |
| 40 | 150 | 110 | 4 | 18 |
| 50 | 165 | 125 | 4 | 18 |
| 65 | 185 | 145 | 4 | 18 |
| 80 | 200 | 160 | 8 | 18 |
| 100 | 220 | 180 | 8 | 18 |
| 125 | 250 | 210 | 8 | 18 |

flanges

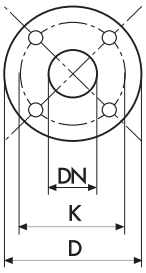


| LOTS | | | | |
|---|---|---|---|---|
| TYPE | TRUCK | | CONTAINER | |
| | PALLET (cm) | N° pumps | PALLET (cm) | N° pumps |
| **32-160** | 80×120×155 | 24 | 80×120×190 | 30 |
| **32-200 (C)** | 80×120×155 | 24 | 80×120×180 | 24 |
| **32-200 (A) (A1) (B) (B1)** | 100×120×140 | 18 | 100×120×185 | 24 |
| **32-250 (A)** | 85×110×120 | 6 | 85×110×170 | 9 |
| **32-250 (B) (C)** | 80×120×120 | 6 | 80×120×170 | 9 |
| **40-125** | 80×120×155 | 24 | 80×120×190 | 30 |
| **40-160** | 80×120×155 | 24 | 80×120×190 | 30 |
| **40-200** | 100×120×140 | 18 | 100×120×185 | 24 |
| **40-250 (A)** | 85×110×120 | 6 | 85×110×170 | 9 |
| **40-250 (B) (BM) (C)** | 80×120×120 | 6 | 80×120×170 | 9 |
| **50-125** | 80×120×120 | 24 | 80×120×180 | 24 |
| **50-160** | 100×120×140 | 18 | 100×120×185 | 24 |
| **50-200 (A)** | 85×110×120 | 6 | 85×110×170 | 9 |
| **50-200 (B) (C)** | 80×120×120 | 6 | 80×120×170 | 9 |
| **50-250** | 80×120×120 | 6 | 80×120×170 | 9 |
| **65-125** | 100×120×140 | 18 | 100×120×185 | 24 |
| **65-160** | 85×110×120 | 6 | 85×110×170 | 9 |
| **65-200** | 85×110×120 | 6 | 85×110×170 | 9 |
| **65-250** | 85×110×130 | 4 | 85×110×190 | 6 |
| **80-160** | 85×110×120 | 6 | 85×110×170 | 9 |
| **80-200** | 85×110×130 | 4 | 85×110×190 | 6 |
| **100-160** | 85×110×130 | 4 | 85×110×190 | 6 |

# CMG-CMGX ~ *EN 733*

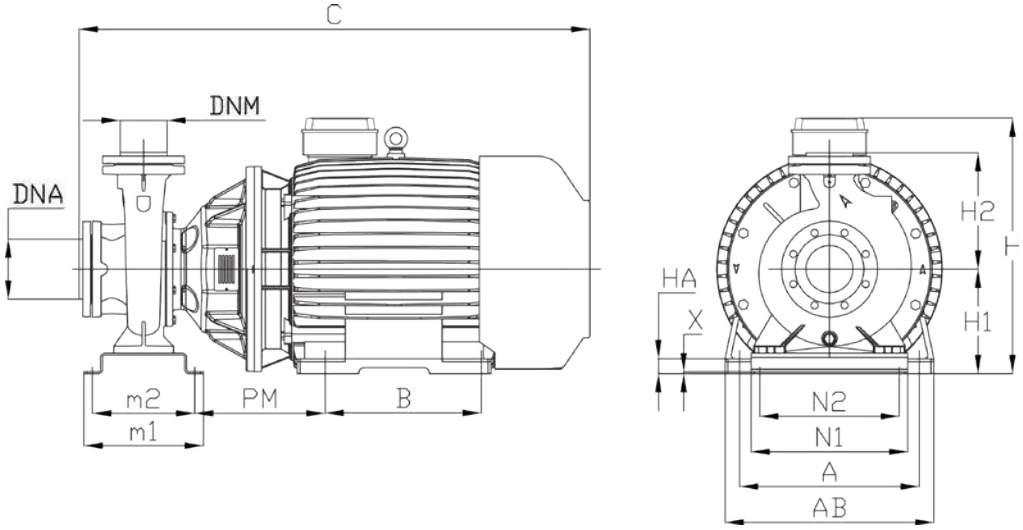


| TYPE | DIMENSIONS (mm) | | | | | | | | | | | | | | | | | | Kg |
|---|---|---|---|---|---|---|---|---|---|---|---|---|---|---|---|---|---|---|---|
| | m1 | m2 | N2 | N1 | H1 | H2 | H | A | AB | B | PM | C | HA | DNA | DNM | I | L | M | |
| **80-250B** | 200 | 120 | 315 | 406 | 225 | 317 | 550 | 356 | 435 | 311 | 356 | 1130 | 28 | 100 | 80 | 655 | 655 | 830 | 440 |
| **80-250A** | 320 | 280 | 360 | 420 | 280 | 317 | 650 | 406 | 485 | 349 | 325 | 1240 | 58 | | | 655 | 655 | 830 | 564 |
| **100-200B** | 200 | 120 | 280 | 360 | 225 | 321 | 550 | 356 | 435 | 311 | 356 | 1130 | 28 | 125 | 100 | 655 | 1400 | 830 | 442,5 |
| **100-200A** | 320 | 280 | 360 | 420 | 280 | 321 | 650 | 406 | 485 | 349 | 325 | 1240 | 60 | | | 655 | 1400 | 830 | 562 |
| **100-250C** | 320 | 280 | 360 | 420 | 280 | 321 | 675 | 406 | 485 | 349 | 325 | 1315 | 60 | | | 655 | 1400 | 830 | 758 |
| **100-250B** | 320 | 280 | 360 | 420 | 280 | 321 | 675 | 457 | 545 | 368 | 347 | 1315 | 35 | | | 655 | 1400 | 830 | 760 |
| **100-250A** | 320 | 280 | 360 | 420 | 280 | 321 | 675 | 457 | 545 | 419 | 347 | 1370 | 35 | | | 655 | 1400 | 830 | 774 |

| DIMENSIONS (mm) | | | | |
|---|---|---|---|---|
| DN | D | K | holes | |
| | | | n° | Ø |
| 80 | 200 | 160 | 8 | 18 |
| 100 | 220 | 180 | 8 | 18 |
| 125 | 250 | 210 | 8 | 18 |

flanges

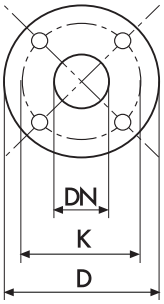

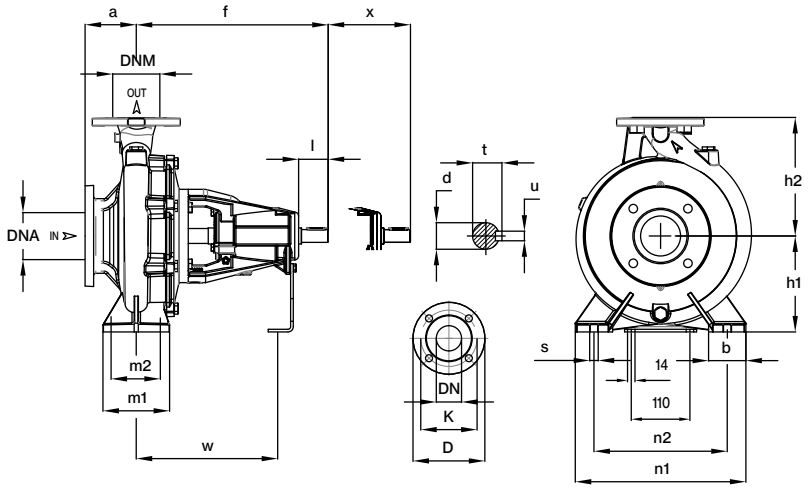


| TYPE | DIMENSIONS (mm) | | | | | | | | | | | | | | | | | | | | | Kg |
|---|---|---|---|---|---|---|---|---|---|---|---|---|---|---|---|---|---|---|---|---|---|---|
| | a | f | h1 | h2 | m1 | m2 | n1 | n2 | s | b | l | d | t | u | x | w | DNA | DNM | l | L | M | |
| **32-160** | 80 | 360 | 132 | 160 | 100 | 70 | 240 | 190 | 14 | 50 | 50 | 24 | 27 | 8 | 100 | 260 | | | 535 | 320 | 445 | 38 |
| **32-200** | 80 | 360 | 160 | 180 | 100 | 70 | 240 | 190 | 14 | 50 | 50 | 24 | 27 | 8 | 100 | 260 | 50 | 32 | 535 | 320 | 445 | 41 |
| **32-250** | 100 | 360 | 180 | 225 | 125 | 95 | 320 | 250 | 14 | 65 | 65 | 24 | 27 | 8 | 100 | 260 | | | 545 | 405 | 545 | 49 |
| **40-125** | 80 | 360 | 112 | 140 | 100 | 70 | 210 | 160 | 14 | 50 | 50 | 24 | 27 | 8 | 100 | 260 | | | 535 | 320 | 445 | 37 |
| **40-160** | 80 | 360 | 132 | 160 | 100 | 70 | 240 | 190 | 14 | 50 | 50 | 24 | 27 | 8 | 100 | 260 | 65 | 40 | 535 | 320 | 445 | 40 |
| **40-200** | 100 | 360 | 160 | 180 | 100 | 70 | 265 | 212 | 14 | 50 | 50 | 24 | 27 | 8 | 100 | 260 | | | 535 | 320 | 445 | 44 |
| **40-250** | 100 | 360 | 180 | 225 | 125 | 95 | 320 | 250 | 14 | 65 | 50 | 24 | 27 | 8 | 100 | 260 | | | 545 | 405 | 545 | 49,5 |
| **50-125** | 100 | 360 | 132 | 160 | 100 | 70 | 240 | 190 | 14 | 50 | 50 | 24 | 27 | 8 | 100 | 260 | | | 535 | 320 | 445 | 39,5 |
| **50-160** | 100 | 360 | 160 | 180 | 100 | 70 | 265 | 212 | 14 | 50 | 50 | 24 | 27 | 8 | 100 | 260 | 65 | | 535 | 320 | 445 | 44 |
| **50-200** | 100 | 360 | 160 | 200 | 100 | 70 | 265 | 215 | 14 | 50 | 50 | 24 | 27 | 8 | 100 | 260 | | 50 | 535 | 320 | 445 | 47 |
| **50-250** | 100 | 360 | 180 | 225 | 125 | 95 | 320 | 250 | 14 | 65 | 50 | 24 | 27 | 8 | 100 | 260 | | | 545 | 405 | 545 | 53 |
| **50-315** | 125 | 470 | 225 | 280 | 125 | 95 | 345 | 280 | 14 | 65 | 80 | 32 | 35,3 | 10 | 100 | 340 | 80 | | 655 | 465 | 620 | 94,5 |
| **65-125** | 100 | 360 | 160 | 180 | 125 | 95 | 280 | 212 | 14 | 65 | 65 | 24 | 27 | 8 | 100 | 260 | | | 535 | 320 | 445 | 44,5 |
| **65-160** | 100 | 360 | 160 | 200 | 125 | 95 | 280 | 212 | 14 | 65 | 65 | 24 | 27 | 8 | 100 | 260 | | | 535 | 320 | 445 | 49 |
| **65-200** | 100 | 360 | 180 | 225 | 125 | 95 | 320 | 250 | 14 | 65 | 65 | 24 | 27 | 8 | 140 | 260 | 80 | 65 | 545 | 405 | 545 | 54 |
| **65-250** | 100 | 470 | 200 | 250 | 160 | 120 | 360 | 280 | 19 | 80 | 80 | 32 | 35 | 10 | 140 | 340 | | | 545 | 405 | 545 | 76,5 |
| **65-315** | 125 | 470 | 225 | 280 | 160 | 120 | 400 | 315 | 19 | 80 | 80 | 32 | 35 | 10 | 140 | 340 | | | 655 | 465 | 620 | 96 |
| **80-160** | 125 | 360 | 180 | 225 | 125 | 95 | 320 | 250 | 14 | 65 | 50 | 24 | 27 | 8 | 140 | 260 | | | 545 | 405 | 545 | 58 |
| **80-200** | 125 | 470 | 180 | 250 | 125 | 95 | 345 | 280 | 14 | 65 | 80 | 32 | 35 | 10 | 140 | 340 | 100 | 80 | 680 | 405 | 545 | 74 |
| **80-250** | 125 | 470 | 200 | 280 | 160 | 120 | 400 | 315 | 18 | 80 | 80 | 32 | 35,3 | 10 | 140 | 340 | | | 655 | 465 | 585 | 91 |
| **80-315** | 125 | 470 | 250 | 315 | 160 | 120 | 400 | 315 | 18 | 80 | 80 | 32 | 35,3 | 10 | 140 | 340 | | | 655 | 465 | 620 | 106 |
| **100-200** | 125 | 470 | 200 | 280 | 160 | 120 | 360 | 280 | 18 | 80 | 80 | 32 | 35,3 | 10 | 140 | 340 | | | 655 | 465 | 620 | 95 |
| **100-250** | 140 | 470 | 225 | 280 | 160 | 120 | 400 | 315 | 18 | 80 | 80 | 32 | 35,3 | 10 | 140 | 340 | 125 | 100 | 655 | 465 | 620 | 103 |
| **100-315** | 140 | 470 | 250 | 315 | 160 | 120 | 400 | 315 | 18 | 80 | 80 | 32 | 35,3 | 10 | 140 | 340 | | | 655 | 465 | 620 | 122 |
| **100-400** | 140 | 530 | 280 | 355 | 200 | 150 | 500 | 400 | 22 | 100 | 110 | 42 | 45,3 | 12 | 140 | 370 | | | 720 | 775 | 855 | 183,5 |
| **125-250** | 140 | 470 | 315 | 355 | 200 | 150 | 400 | 315 | 22 | 100 | 110 | 32 | 45,3 | 12 | 140 | 370 | | | 655 | 465 | 620 | 132 |
| **125-315** | 140 | 530 | 280 | 355 | 200 | 150 | 500 | 400 | 22 | 100 | 110 | 42 | 45,3 | 12 | 140 | 370 | 150 | 125 | 720 | 775 | 855 | 176 |
| **125-400** | 140 | 530 | 315 | 400 | 200 | 150 | 500 | 400 | 22 | 100 | 110 | 42 | 45,3 | 12 | 140 | 370 | | | 720 | 775 | 855 | 198 |
| **150-315** | 160 | 530 | 280 | 400 | 200 | 150 | 550 | 450 | 22 | 100 | 110 | 42 | 45,3 | 12 | 140 | 370 | 200 | 150 | 655 | 465 | 620 | 191 |
| **150-400** | 160 | 530 | 315 | 450 | 200 | 150 | 550 | 450 | 22 | 100 | 110 | 42 | 45,3 | 12 | 140 | 370 | | | 720 | 775 | 855 | 218,5 |
| **200-315** | 180 | 706 | 355 | 450 | 250 | 190 | 634 | 500 | 28 | 134 | 110 | 55 | 58,3 | 16 | 208 | 523 | 250 | 200 | 800 | 1200 | 1150 | 345 |
| **200-400** | 180 | 706 | 355 | 500 | 250 | 190 | 634 | 500 | 28 | 134 | 110 | 55 | 58,3 | 16 | 214 | 523 | | | 800 | 1200 | 1150 | 346 |
| **250-315** | 225 | 711 | 400 | 500 | 250 | 200 | 694 | 560 | 28 | 134 | 110 | 55 | 58,3 | 16 | 214 | 528 | 300 | 250 | 800 | 1200 | 1070 | 401,5 |
| **250-400** | 225 | 706 | 400 | 550 | 250 | 200 | 694 | 560 | 28 | 134 | 110 | 55 | 58,3 | 16 | 220 | 523 | | | 800 | 1200 | 1120 | 393 |

| DIMENSIONS (mm) | | | | |
|---|---|---|---|---|
| DN | D | K | holes | |
| | | | n° | Ø |
| 32 | 140 | 100 | 4 | 18 |
| 40 | 150 | 110 | 4 | 18 |
| 50 | 165 | 125 | 4 | 18 |
| 65 | 185 | 145 | 4 | 18 |
| 80 | 200 | 160 | 8 | 18 |
| 100 | 220 | 180 | 8 | 18 |
| 125 | 250 | 210 | 8 | 18 |
| 150 | 285 | 240 | 8 | 23 |
| 200 | 340 | 295 | 8 | 23 |
| 250 | 395 | 350 | 12 | 23 |
| 300 | 445 | 400 | 12 | 23 |

flanges

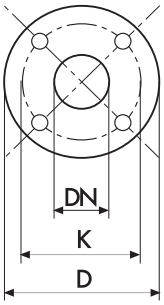

# CA-CAX *EN 733* ~ 2900 rpm

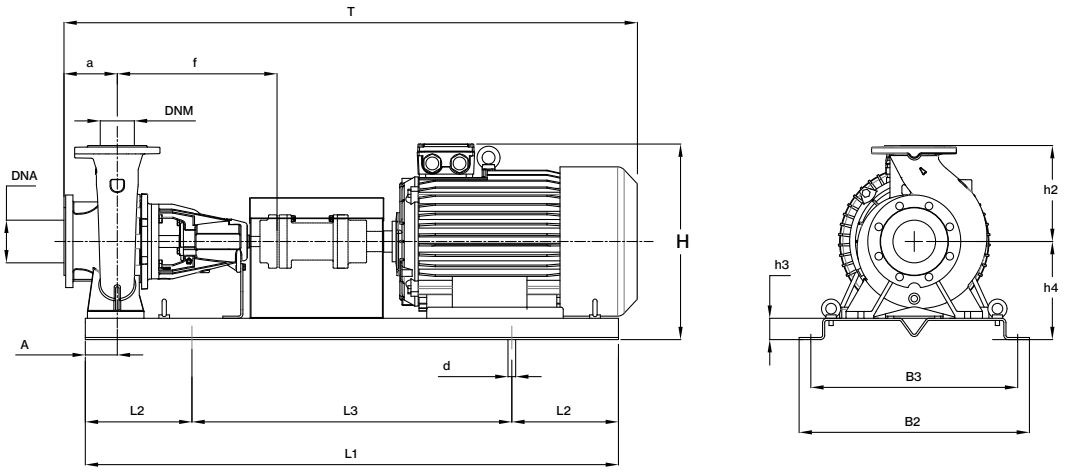


| TYPE | kW | Motor Size | DIMENSIONS (mm) | | | | | | | | | | | | | | | | Kg |
|---|---|---|---|---|---|---|---|---|---|---|---|---|---|---|---|---|---|---|---|
| | | | a | f | h4 | h2 | h3 | L1 | L2 | L3 | B2 | B3 | A | d | T | H | DNA | DNM | |
| **32-160C** | 1,5 | 90S | 80 | 360 | 182 | 160 | 50 | 900 | 150 | 600 | 390 | 350 | 60 | 18 | 855 | 342 | | | 82,1 |
| **32-160B** | 2,2 | 90L | 80 | 360 | 182 | 160 | 50 | 900 | 150 | 600 | 390 | 350 | 60 | 18 | 920 | 342 | | | 87,7 |
| **32-160A** | 3 | 100L | 80 | 360 | 182 | 160 | 50 | 900 | 150 | 600 | 390 | 350 | 60 | 18 | 920 | 362 | | | 96,7 |
| **32-160A** | 4 | 112M | 80 | 360 | 182 | 160 | 50 | 900 | 150 | 600 | 390 | 350 | 60 | 18 | 940 | 375 | | | 104,7 |
| **32-200C** | 4 | 112M | 80 | 360 | 210 | 180 | 50 | 900 | 150 | 600 | 390 | 350 | 60 | 18 | 940 | 403 | | | 108,7 |
| **32-200C** | 5,5 | 132S | 80 | 360 | 210 | 180 | 50 | 1000 | 170 | 660 | 450 | 400 | 60 | 22 | 1020 | 433 | 50 | 32 | 116,1 |
| **32-200B** | 5,5 | 132S | 80 | 360 | 210 | 180 | 50 | 1000 | 170 | 660 | 450 | 400 | 60 | 22 | 1020 | 433 | | | 116,1 |
| **32-200B** | 7,5 | 132S | 80 | 360 | 210 | 180 | 50 | 1000 | 170 | 660 | 450 | 400 | 60 | 22 | 1020 | 433 | | | 144,3 |
| **32-200A** | 7,5 | 132S | 80 | 360 | 210 | 180 | 50 | 1000 | 170 | 660 | 450 | 400 | 60 | 22 | 1020 | 433 | | | 144,3 |
| **32-250C** | 11 | 160M | 100 | 360 | 230 | 225 | 50 | 1250 | 205 | 840 | 540 | 490 | 75 | 22 | 1275 | 495 | | | 207,3 |
| **32-250B** | 11 | 160M | 100 | 360 | 230 | 225 | 50 | 1250 | 205 | 840 | 540 | 490 | 75 | 22 | 1275 | 495 | | | 207,3 |
| **32-250A** | 15 | 160M | 100 | 360 | 230 | 225 | 50 | 1250 | 205 | 840 | 540 | 490 | 75 | 22 | 1275 | 495 | | | 219,3 |
| **40-125C** | 1,5 | 90S | 80 | 360 | 162 | 140 | 50 | 900 | 150 | 600 | 390 | 350 | 60 | 18 | 855 | 317 | | | 82,2 |
| **40-125C** | 2,2 | 90L | 80 | 360 | 162 | 140 | 50 | 900 | 150 | 600 | 390 | 350 | 60 | 18 | 920 | 317 | | | 87,8 |
| **40-125B** | 2,2 | 90L | 80 | 360 | 162 | 140 | 50 | 900 | 150 | 600 | 390 | 350 | 60 | 18 | 920 | 317 | | | 87,8 |
| **40-125B** | 3 | 100L | 80 | 360 | 162 | 140 | 50 | 900 | 150 | 600 | 390 | 350 | 60 | 18 | 920 | 342 | | | 96,8 |
| **40-125A** | 3 | 100L | 80 | 360 | 162 | 140 | 50 | 900 | 150 | 600 | 390 | 350 | 60 | 18 | 920 | 342 | | | 96,8 |
| **40-160B** | 3 | 100L | 80 | 360 | 182 | 160 | 50 | 900 | 150 | 600 | 390 | 350 | 60 | 18 | 920 | 362 | | | 99,8 |
| **40-160B** | 4 | 112M | 80 | 360 | 182 | 160 | 50 | 900 | 150 | 600 | 390 | 350 | 60 | 18 | 940 | 375 | | | 107,8 |
| **40-160A** | 4 | 112M | 80 | 360 | 182 | 160 | 50 | 900 | 150 | 600 | 390 | 350 | 60 | 18 | 940 | 375 | | | 107,8 |
| **40-160A** | 5,5 | 132S | 80 | 360 | 182 | 160 | 50 | 1000 | 170 | 660 | 450 | 400 | 60 | 22 | 1020 | 405 | | | 115,2 |
| **40-160AP** | 5,5 | 132S | 80 | 360 | 182 | 160 | 50 | 1000 | 170 | 660 | 450 | 400 | 60 | 22 | 1020 | 405 | | | 115,2 |
| **40-200B** | 5,5 | 132S | 100 | 360 | 210 | 180 | 50 | 1000 | 170 | 660 | 450 | 400 | 60 | 22 | 1040 | 433 | | | 119,2 |
| **40-200B** | 7,5 | 132S | 100 | 360 | 210 | 180 | 50 | 1000 | 170 | 660 | 450 | 400 | 60 | 22 | 1040 | 433 | 65 | 40 | 147,4 |
| **40-200A** | 7,5 | 132S | 100 | 360 | 210 | 180 | 50 | 1000 | 170 | 660 | 450 | 400 | 60 | 22 | 1040 | 433 | | | 147,4 |
| **40-200A** | 11 | 160M | 100 | 360 | 210 | 180 | 50 | 1120 | 190 | 740 | 490 | 440 | 60 | 22 | 1168 | 475 | | | 198,4 |
| **40-200 AP** | 7,5 | 132S | 100 | 360 | 210 | 180 | 50 | 1000 | 170 | 660 | 450 | 400 | 60 | 22 | 1040 | 433 | | | 147,4 |
| **40-200 AP** | 11 | 160M | 100 | 360 | 210 | 180 | 50 | 1120 | 190 | 740 | 490 | 440 | 60 | 22 | 1168 | 475 | | | 198,4 |
| **40-250C** | 11 | 160M | 100 | 360 | 230 | 225 | 50 | 1250 | 205 | 840 | 540 | 490 | 75 | 22 | 1275 | 495 | | | 208,9 |
| **40-250B** | 11 | 160M | 100 | 360 | 230 | 225 | 50 | 1250 | 205 | 840 | 540 | 490 | 75 | 22 | 1275 | 495 | | | 208,9 |
| **40-250B** | 15 | 160M | 100 | 360 | 230 | 225 | 50 | 1250 | 205 | 840 | 540 | 490 | 75 | 22 | 1275 | 495 | | | 220,9 |
| **40-250A** | 15 | 160M | 100 | 360 | 230 | 225 | 50 | 1250 | 205 | 840 | 540 | 490 | 75 | 22 | 1275 | 495 | | | 220,9 |
| **40-250A** | 18,5 | 160L | 100 | 360 | 230 | 225 | 50 | 1250 | 205 | 840 | 540 | 490 | 75 | 22 | 1275 | 495 | | | 238,9 |
| **40-250BM** | 18,5 | 160L | 100 | 360 | 230 | 225 | 50 | 1250 | 205 | 840 | 540 | 490 | 75 | 22 | 1275 | 495 | | | 238,9 |
| **40-250AM** | 22 | 180M | 100 | 360 | 230 | 225 | 50 | 1250 | 205 | 840 | 540 | 490 | 75 | 22 | 1275 | 510 | | | 297,3 |
| **50-125B** | 3 | 100L | 100 | 360 | 182 | 160 | 50 | 900 | 150 | 600 | 390 | 350 | 60 | 18 | 940 | 362 | | | 99,7 |
| **50-125A** | 4 | 112M | 100 | 360 | 182 | 160 | 50 | 900 | 150 | 600 | 390 | 350 | 60 | 18 | 960 | 375 | | | 107,7 |
| **50-160B** | 5,5 | 132S | 100 | 360 | 210 | 180 | 50 | 1000 | 170 | 660 | 450 | 400 | 60 | 22 | 1040 | 433 | | | 119,6 |
| **50-160A** | 7,5 | 132S | 100 | 360 | 210 | 180 | 50 | 1000 | 170 | 660 | 450 | 400 | 60 | 22 | 1040 | 433 | | | 147,8 |
| **50-200C** | 11 | 160M | 100 | 360 | 210 | 200 | 50 | 1120 | 190 | 740 | 490 | 440 | 60 | 22 | 1168 | 475 | 65 | | 201,8 |
| **50-200B** | 11 | 160M | 100 | 360 | 210 | 200 | 50 | 1120 | 190 | 740 | 490 | 440 | 60 | 22 | 1168 | 475 | | | 201,8 |
| **50-200A** | 15 | 160M | 100 | 360 | 210 | 200 | 50 | 1120 | 190 | 740 | 490 | 440 | 60 | 22 | 1168 | 475 | | 50 | 213,8 |
| **50-250C** | 15 | 160M | 100 | 360 | 230 | 225 | 50 | 1250 | 205 | 840 | 540 | 490 | 75 | 22 | 1275 | 495 | | | 224,8 |
| **50-250B** | 18,5 | 160L | 100 | 360 | 230 | 225 | 50 | 1250 | 205 | 840 | 540 | 490 | 75 | 22 | 1275 | 495 | | | 242,8 |
| **50-250A** | 22 | 180M | 100 | 360 | 230 | 225 | 50 | 1250 | 205 | 840 | 540 | 490 | 75 | 22 | 1275 | 510 | | | 301,2 |
| **50-315DN** | 37 | 200L | 125 | 470 | 275 | 280 | 50 | 1400 | 230 | 940 | 610 | 550 | 75 | 26 | 1455 | 585 | | | 415,0 |
| **50-315CN** | 45 | 225M | 125 | 470 | 275 | 280 | 50 | 1400 | 230 | 940 | 610 | 550 | 75 | 26 | 1500 | 605 | 80 | | 465,8 |
| **50-315BN** | 55 | 250M | 125 | 470 | 310 | 280 | 85 | 1600 | 270 | 1060 | 660 | 600 | 75 | 26 | 1650 | 710 | | | 611,8 |
| **50-315AN** | 75 | 280S | 125 | 470 | 310 | 280 | 85 | 1800 | 300 | 1200 | 730 | 670 | 75 | 26 | 1850 | 770 | | | 762,6 |

| TYPE | kW | Motor Size | DIMENSIONS (mm) | | | | | | | | | | | | | | | | Kg |
|---|---|---|---|---|---|---|---|---|---|---|---|---|---|---|---|---|---|---|---|
| | | | a | f | h4 | h2 | h3 | L1 | L2 | L3 | B2 | B3 | A | d | T | H | DNA | DNM | |
| **65-125B** | 5,5 | 132S | 100 | 360 | 210 | 180 | 50 | 1000 | 170 | 660 | 450 | 400 | 60 | 22 | 1040 | 433 | | | 121,4 |
| **65-125A** | 7,5 | 132S | 100 | 360 | 210 | 180 | 50 | 1000 | 170 | 660 | 450 | 400 | 60 | 22 | 1040 | 433 | | | 149,6 |
| **65-160C** | 11 | 160M | 100 | 360 | 210 | 200 | 50 | 1120 | 190 | 740 | 490 | 440 | 60 | 22 | 1168 | 475 | | | 205,1 |
| **65-160B** | 11 | 160M | 100 | 360 | 210 | 200 | 50 | 1120 | 190 | 740 | 490 | 440 | 60 | 22 | 1168 | 475 | | | 205,1 |
| **65-160A** | 15 | 160M | 100 | 360 | 210 | 200 | 50 | 1120 | 190 | 740 | 490 | 440 | 60 | 22 | 1168 | 475 | | | 217,1 |
| **65-200C** | 15 | 160M | 100 | 360 | 230 | 225 | 50 | 1250 | 205 | 840 | 540 | 490 | 75 | 22 | 1275 | 495 | | | 227,5 |
| **65-200B** | 18,5 | 160L | 100 | 360 | 230 | 225 | 50 | 1250 | 205 | 840 | 540 | 490 | 75 | 22 | 1275 | 495 | 80 | 65 | 245,5 |
| **65-200A** | 22 | 180M | 100 | 360 | 230 | 225 | 50 | 1250 | 205 | 840 | 540 | 490 | 75 | 22 | 1290 | 510 | | | 303,3 |
| **65-250B** | 30 | 200L | 100 | 470 | 250 | 250 | 50 | 1400 | 230 | 940 | 610 | 550 | 90 | 26 | 1470 | 560 | | | 377,8 |
| **65-250A** | 37 | 200L | 100 | 470 | 250 | 250 | 50 | 1400 | 230 | 940 | 610 | 550 | 90 | 26 | 1470 | 560 | | | 397,8 |
| **65-315CN** | 55 | 250M | 125 | 470 | 310 | 280 | 85 | 1600 | 270 | 1060 | 660 | 600 | 90 | 26 | 1645 | 710 | | | 614,2 |
| **65-315BN** | 75 | 280S | 125 | 470 | 310 | 280 | 85 | 1800 | 300 | 1200 | 730 | 670 | 90 | 26 | 1835 | 770 | | | 765,0 |
| **65-315AN** | 90 | 280M | 125 | 470 | 310 | 280 | 85 | 1800 | 300 | 1200 | 730 | 670 | 90 | 26 | 1835 | 770 | | | 839,2 |
| **80-160E** | 11 | 160M | 125 | 360 | 230 | 225 | 50 | 1250 | 205 | 840 | 540 | 490 | 75 | 22 | 1300 | 495 | | | 220,8 |
| **80-160D** | 11 | 160M | 125 | 360 | 230 | 225 | 50 | 1250 | 205 | 840 | 540 | 490 | 75 | 22 | 1300 | 495 | | | 220,8 |
| **80-160C** | 15 | 160M | 125 | 360 | 230 | 225 | 50 | 1250 | 205 | 840 | 540 | 490 | 75 | 22 | 1300 | 495 | | | 232,8 |
| **80-160B** | 18,5 | 160L | 125 | 360 | 230 | 225 | 50 | 1250 | 205 | 840 | 540 | 490 | 75 | 22 | 1300 | 495 | | | 250,8 |
| **80-160A** | 22 | 180M | 125 | 360 | 230 | 225 | 50 | 1250 | 205 | 840 | 540 | 490 | 75 | 22 | 1315 | 510 | | | 308,7 |
| **80-200B** | 30 | 200L | 125 | 470 | 230 | 250 | 50 | 1400 | 230 | 940 | 610 | 550 | 75 | 26 | 1495 | 560 | 100 | 80 | 376,7 |
| **80-200A** | 37 | 200L | 125 | 470 | 230 | 250 | 50 | 1400 | 230 | 940 | 610 | 550 | 75 | 26 | 1495 | 560 | | | 396,7 |
| **80-250B** | 45 | 225M | 125 | 470 | 250 | 280 | 50 | 1400 | 230 | 940 | 610 | 550 | 90 | 26 | 1540 | 605 | | | 464,5 |
| **80-250A** | 55 | 250M | 125 | 470 | 285 | 280 | 85 | 1600 | 270 | 1060 | 660 | 600 | 90 | 26 | 1645 | 710 | | | 610,5 |
| **80-315BN** | 90 | 280M | 125 | 470 | 335 | 315 | 85 | 1800 | 300 | 1200 | 730 | 670 | 90 | 26 | 1835 | 770 | | | 850,5 |
| **80-315AN** | 110 | 315S | 125 | 470 | 405 | 315 | 120 | 2000 | 300 | 1400 | 790 | 750 | 90 | 22 | 2020 | 925 | | | 1233 |
| **100-200D** | 30 | 200L | 125 | 470 | 250 | 280 | 50 | 1400 | 230 | 940 | 610 | 550 | 90 | 26 | 1500 | 560 | | | 374 |
| **100-200C** | 37 | 200L | 125 | 470 | 250 | 280 | 50 | 1400 | 230 | 940 | 610 | 550 | 90 | 26 | 1500 | 560 | | | 428 |
| **100-200B** | 45 | 225M | 125 | 470 | 250 | 280 | 50 | 1400 | 230 | 940 | 610 | 550 | 90 | 26 | 1540 | 605 | | | 471,5 |
| **100-200A** | 55 | 250M | 125 | 470 | 285 | 280 | 85 | 1600 | 270 | 1060 | 660 | 600 | 90 | 26 | 1645 | 710 | 125 | 100 | 617,5 |
| **100-250C** | 55 | 250M | 140 | 470 | 310 | 280 | 85 | 1600 | 270 | 1060 | 660 | 600 | 90 | 26 | 1660 | 710 | | | 625,5 |
| **100-250C** | 75 | 280S | 140 | 470 | 310 | 280 | 85 | 1800 | 300 | 1200 | 730 | 670 | 90 | 26 | 1850 | 770 | | | 776,3 |
| **100-250B** | 75 | 280S | 140 | 470 | 310 | 280 | 85 | 1800 | 300 | 1200 | 730 | 670 | 90 | 26 | 1850 | 770 | | | 776,3 |
| **100-250A** | 90 | 280M | 140 | 470 | 310 | 280 | 85 | 1800 | 300 | 1200 | 730 | 670 | 90 | 26 | 1850 | 770 | | | 850,5 |

# 4CA-4CAX *EN 733* ~ 1450 rpm

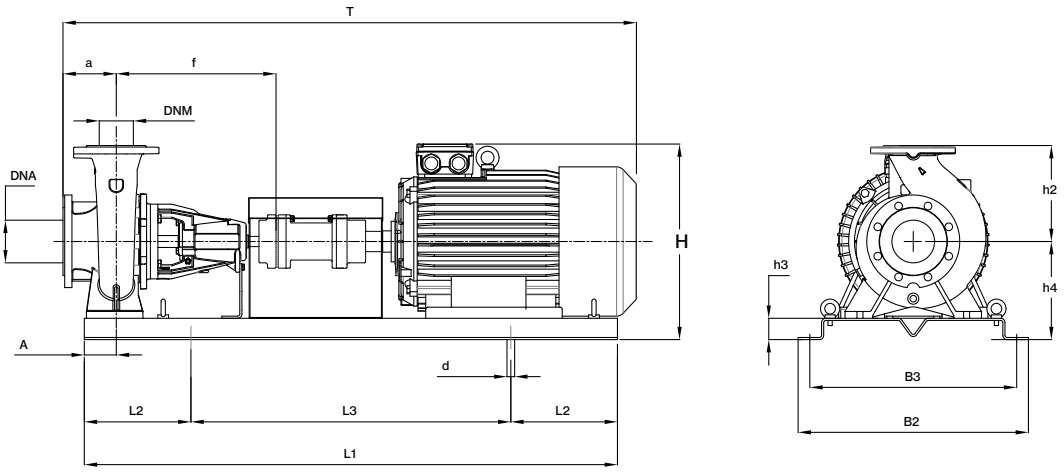


| TYPE | kW | Motor Size | DIMENSIONS (mm) | | | | | | | | | | | | | | | | Kg |
|---|---|---|---|---|---|---|---|---|---|---|---|---|---|---|---|---|---|---|---|
| | | | a | f | h4 | h2 | h3 | L1 | L2 | L3 | B2 | B3 | A | d | T | H | DNA | DNM | |
| **32-160C** | 0,37 | 71B | 80 | 360 | 182 | 160 | 50 | 800 | 130 | 540 | 360 | 320 | 60 | 18 | 820 | 342 | | | 59,4 |
| **32-160B** | 0,37 | 71B | 80 | 360 | 182 | 160 | 50 | 800 | 130 | 540 | 360 | 320 | 60 | 18 | 820 | 342 | | | 59,4 |
| **32-160A** | 0,55 | 80A | 80 | 360 | 182 | 160 | 50 | 800 | 130 | 540 | 360 | 320 | 60 | 18 | 820 | 342 | | | 59,1 |
| **32-200C** | 0,75 | 80B | 80 | 360 | 210 | 180 | 50 | 800 | 130 | 540 | 360 | 320 | 60 | 18 | 820 | 390 | | | 75,1 |
| **32-200B** | 1,1 | 90S | 80 | 360 | 210 | 180 | 50 | 800 | 130 | 540 | 360 | 320 | 60 | 18 | 855 | 390 | 50 | 32 | 88,1 |
| **32-200A** | 1,1 | 90S | 80 | 360 | 210 | 180 | 50 | 800 | 130 | 540 | 360 | 320 | 60 | 18 | 855 | 390 | | | 88,1 |
| **32-250C** | 1,5 | 90S | 100 | 360 | 230 | 225 | 50 | 1000 | 170 | 660 | 450 | 400 | 75 | 22 | 1025 | 455 | | | 106,7 |
| **32-250B** | 1,5 | 90S | 100 | 360 | 230 | 225 | 50 | 1000 | 170 | 660 | 450 | 400 | 75 | 22 | 1025 | 455 | | | 106,7 |
| **32-250A** | 2,2 | 100L | 100 | 360 | 230 | 225 | 50 | 1000 | 170 | 660 | 450 | 400 | 75 | 22 | 1025 | 455 | | | 112,7 |
| **40-125C** | 0,37 | 71B | 80 | 360 | 162 | 140 | 50 | 800 | 130 | 540 | 360 | 320 | 60 | 18 | 820 | 302 | | | 59,5 |
| **40-125B** | 0,37 | 71B | 80 | 360 | 162 | 140 | 50 | 800 | 130 | 540 | 360 | 320 | 60 | 18 | 820 | 302 | | | 59,5 |
| **40-125A** | 0,55 | 80A | 80 | 360 | 162 | 140 | 50 | 800 | 130 | 540 | 360 | 320 | 60 | 18 | 820 | 307 | | | 59,2 |
| **40-160B** | 0,55 | 80A | 80 | 360 | 182 | 160 | 50 | 800 | 130 | 540 | 360 | 320 | 60 | 18 | 820 | 342 | | | 62,2 |
| **40-160A** | 0,75 | 80A | 80 | 360 | 182 | 160 | 50 | 800 | 130 | 540 | 360 | 320 | 60 | 18 | 820 | 342 | | | 74,2 |
| **40-160AP** | 0,75 | 80A | 80 | 360 | 182 | 160 | 50 | 800 | 130 | 540 | 360 | 320 | 60 | 18 | 820 | 342 | | | 74,2 |
| **40-200B** | 0,75 | 90S | 100 | 360 | 210 | 180 | 50 | 900 | 150 | 600 | 390 | 350 | 60 | 18 | 940 | 390 | 65 | 40 | 87,0 |
| **40-200A** | 1,1 | 90S | 100 | 360 | 210 | 180 | 50 | 900 | 150 | 600 | 390 | 350 | 60 | 18 | 940 | 390 | | | 93,8 |
| **40-200AP** | 1,1 | 90L | 100 | 360 | 210 | 180 | 50 | 900 | 150 | 600 | 390 | 350 | 60 | 18 | 940 | 390 | | | 93,8 |
| **40-250C** | 1,5 | 90L | 100 | 360 | 230 | 225 | 50 | 1000 | 170 | 660 | 450 | 400 | 75 | 22 | 1025 | 455 | | | 108,3 |
| **40-250B** | 2,2 | 100L | 100 | 360 | 230 | 225 | 50 | 1000 | 170 | 660 | 450 | 400 | 75 | 22 | 1025 | 455 | | | 114,3 |
| **40-250A** | 2,2 | 100L | 100 | 360 | 230 | 225 | 50 | 1000 | 170 | 660 | 450 | 400 | 75 | 22 | 1025 | 455 | | | 114,3 |
| **40-250BM** | 3 | 100L | 100 | 360 | 230 | 225 | 50 | 1000 | 170 | 660 | 450 | 400 | 75 | 22 | 1025 | 455 | | | 120,0 |
| **40-250AM** | 3 | 100L | 100 | 360 | 230 | 225 | 50 | 1000 | 170 | 660 | 450 | 400 | 75 | 22 | 1025 | 455 | | | 120,0 |
| **50-125B** | 0,55 | 80A | 100 | 360 | 182 | 160 | 50 | 800 | 130 | 540 | 360 | 320 | 60 | 18 | 840 | 342 | | | 62,1 |
| **50-125A** | 0,75 | 80B | 100 | 360 | 182 | 160 | 50 | 800 | 130 | 540 | 360 | 320 | 60 | 18 | 840 | 342 | | | 74,1 |
| **50-160B** | 0,75 | 80B | 100 | 360 | 210 | 180 | 50 | 800 | 130 | 540 | 360 | 320 | 60 | 18 | 840 | 390 | | | 78,6 |
| **50-160A** | 1,1 | 90S | 100 | 360 | 210 | 180 | 50 | 800 | 130 | 540 | 360 | 320 | 60 | 18 | 875 | 390 | | | 91,6 |
| **50-200C** | 1,1 | 90S | 100 | 360 | 210 | 200 | 50 | 900 | 150 | 600 | 390 | 350 | 60 | 18 | 940 | 410 | 65 | | 97,2 |
| **50-200B** | 1,5 | 90S | 100 | 360 | 210 | 200 | 50 | 900 | 150 | 600 | 390 | 350 | 60 | 18 | 940 | 410 | | | 102,2 |
| **50-200A** | 1,5 | 90S | 100 | 360 | 210 | 200 | 50 | 900 | 150 | 600 | 390 | 350 | 60 | 18 | 940 | 410 | | 50 | 102,2 |
| **50-250C** | 2,2 | 100L | 100 | 360 | 230 | 225 | 50 | 1000 | 170 | 660 | 450 | 400 | 75 | 22 | 1025 | 455 | | | 118,2 |
| **50-250B** | 3 | 100L | 100 | 360 | 230 | 225 | 50 | 1000 | 170 | 660 | 450 | 400 | 75 | 22 | 1025 | 455 | | | 122,2 |
| **50-250A** | 4 | 112M | 100 | 360 | 230 | 225 | 50 | 1000 | 170 | 660 | 450 | 400 | 75 | 22 | 1025 | 455 | | | 128,2 |
| **50-315C** | 5,5 | 132S | 125 | 470 | 275 | 280 | 50 | 1120 | 190 | 740 | 490 | 440 | 75 | 22 | 1170 | 555 | | | 200,1 |
| **50-315B** | 7,5 | 132M | 125 | 470 | 275 | 280 | 50 | 1120 | 190 | 740 | 490 | 440 | 75 | 22 | 1200 | 555 | 80 | | 186,6 |
| **50-315A** | 11 | 160M | 125 | 470 | 275 | 280 | 50 | 1250 | 205 | 840 | 540 | 490 | 75 | 22 | 1303 | 555 | | | 260,1 |

| TYPE | kW | Motor Size | DIMENSIONS (mm) | | | | | | | | | | | | | | | | Kg |
|---|---|---|---|---|---|---|---|---|---|---|---|---|---|---|---|---|---|---|---|
| | | | a | f | h4 | h2 | h3 | L1 | L2 | L3 | B2 | B3 | A | d | T | H | DNA | DNM | |
| **65-125B** | 0,75 | 80M | 100 | 360 | 210 | 180 | 50 | 800 | 130 | 540 | 360 | 320 | 60 | 18 | 840 | 390 | | | 80,4 |
| **65-125A** | 1,1 | 90S | 100 | 360 | 210 | 180 | 50 | 800 | 130 | 540 | 360 | 320 | 60 | 18 | 875 | 390 | | | 93,4 |
| **65-160C** | 1,5 | 90S | 100 | 360 | 210 | 200 | 50 | 900 | 150 | 600 | 390 | 350 | 60 | 18 | 940 | 410 | | | 105,5 |
| **65-160B** | 1,5 | 90S | 100 | 360 | 210 | 200 | 50 | 900 | 150 | 600 | 390 | 350 | 60 | 18 | 940 | 410 | | | 105,5 |
| **65-160A** | 2,2 | 100L | 100 | 360 | 210 | 200 | 50 | 900 | 150 | 600 | 390 | 350 | 60 | 18 | 940 | 410 | | | 111,5 |
| **65-200C** | 2,2 | 100L | 100 | 360 | 230 | 225 | 50 | 1120 | 190 | 740 | 490 | 440 | 75 | 22 | 1145 | 455 | | | 124,8 |
| **65-200B** | 3 | 100L | 100 | 360 | 230 | 225 | 50 | 1120 | 190 | 740 | 490 | 440 | 75 | 22 | 1145 | 455 | 80 | 65 | 128,8 |
| **65-200A** | 3 | 100L | 100 | 360 | 230 | 225 | 50 | 1120 | 190 | 740 | 490 | 440 | 75 | 22 | 1145 | 455 | | | 128,8 |
| **65-250B** | 4 | 112M | 100 | 470 | 250 | 250 | 50 | 1120 | 190 | 740 | 490 | 440 | 90 | 22 | 1130 | 500 | | | 159,0 |
| **65-250B** | 5,5 | 132S | 100 | 470 | 250 | 250 | 50 | 1120 | 190 | 740 | 490 | 440 | 90 | 22 | 1175 | 500 | | | 183,0 |
| **65-250A** | 5,5 | 132S | 100 | 470 | 250 | 250 | 50 | 1120 | 190 | 740 | 490 | 440 | 90 | 22 | 1175 | 500 | | | 183,0 |
| **65-315CM** | 7,5 | 132M | 125 | 470 | 275 | 280 | 50 | 1250 | 205 | 840 | 540 | 490 | 90 | 22 | 1285 | 555 | | | 194,0 |
| **65-315BM** | 11 | 160M | 125 | 470 | 275 | 280 | 50 | 1250 | 205 | 840 | 540 | 490 | 90 | 22 | 1343 | 555 | | | 262,5 |
| **65-315AM** | 11 | 160M | 125 | 470 | 275 | 280 | 50 | 1250 | 205 | 840 | 540 | 490 | 90 | 22 | 1343 | 555 | | | 262,5 |
| **80-160E** | 1,1 | 90S | 125 | 360 | 230 | 225 | 50 | 1000 | 170 | 660 | 450 | 400 | 75 | 22 | 1050 | 455 | | | 115,1 |
| **80-160D** | 1,5 | 90S | 125 | 360 | 230 | 225 | 50 | 1000 | 170 | 660 | 450 | 400 | 75 | 22 | 1050 | 455 | | | 120,1 |
| **80-160C** | 1,5 | 90S | 125 | 360 | 230 | 225 | 50 | 1000 | 170 | 660 | 450 | 400 | 75 | 22 | 1050 | 455 | | | 120,1 |
| **80-160B** | 2,2 | 100L | 125 | 360 | 230 | 225 | 50 | 1000 | 170 | 660 | 450 | 400 | 75 | 22 | 1050 | 455 | | | 126,1 |
| **80-160A** | 3 | 100L | 125 | 360 | 230 | 225 | 50 | 1000 | 170 | 660 | 450 | 400 | 75 | 22 | 1050 | 455 | | | 130,1 |
| **80-200B** | 4 | 112M | 125 | 470 | 230 | 250 | 50 | 1120 | 190 | 740 | 490 | 440 | 75 | 22 | 1170 | 480 | 100 | 80 | 157,8 |
| **80-200A** | 5,5 | 132S | 125 | 470 | 230 | 250 | 50 | 1120 | 190 | 740 | 490 | 440 | 75 | 22 | 1200 | 480 | | | 181,8 |
| **80-250B** | 5,5 | 132S | 125 | 470 | 250 | 280 | 50 | 1250 | 205 | 840 | 540 | 490 | 90 | 22 | 1285 | 530 | | | 203,8 |
| **80-250A** | 7,5 | 132M | 125 | 470 | 250 | 280 | 50 | 1250 | 205 | 840 | 540 | 490 | 90 | 22 | 1285 | 530 | | | 190,3 |
| **80-315B** | 11 | 160M | 125 | 470 | 300 | 315 | 50 | 1250 | 205 | 840 | 540 | 490 | 90 | 22 | 1343 | 615 | | | 273,8 |
| **80-315A** | 15 | 160L | 125 | 470 | 300 | 315 | 50 | 1400 | 230 | 940 | 610 | 550 | 90 | 26 | 1435 | 615 | | | 305,8 |
| **100-200D** | 4 | 112M | 125 | 470 | 250 | 280 | 50 | 1120 | 190 | 740 | 490 | 440 | 90 | 22 | 1130 | 480 | | | 161,0 |
| **100-200C** | 5,5 | 132S | 125 | 470 | 250 | 280 | 50 | 1120 | 190 | 740 | 490 | 440 | 90 | 22 | 1200 | 530 | | | 185,0 |
| **100-200B** | 5,5 | 132S | 125 | 470 | 250 | 280 | 50 | 1120 | 190 | 740 | 490 | 440 | 90 | 22 | 1200 | 530 | | | 186,0 |
| **100-200A** | 7,5 | 132M | 125 | 470 | 250 | 280 | 50 | 1120 | 190 | 740 | 490 | 440 | 90 | 22 | 1240 | 530 | | | 198,0 |
| **100-250E** | 7,5 | 132M | 140 | 470 | 275 | 280 | 50 | 1250 | 205 | 840 | 540 | 490 | 90 | 22 | 1300 | 555 | | | 205,3 |
| **100-250D** | 7,5 | 132M | 140 | 470 | 275 | 280 | 50 | 1250 | 205 | 840 | 540 | 490 | 90 | 22 | 1300 | 555 | | | 205,3 |
| **100-250D** | 11 | 160M | 140 | 470 | 275 | 280 | 50 | 1250 | 205 | 840 | 540 | 490 | 90 | 22 | 1358 | 555 | 125 | 100 | 273,8 |
| **100-250A** | 11 | 160M | 140 | 470 | 275 | 280 | 50 | 1250 | 205 | 840 | 540 | 490 | 90 | 22 | 1358 | 555 | | | 273,8 |
| **100-315B** | 15 | 160L | 140 | 470 | 300 | 315 | 50 | 1400 | 230 | 940 | 610 | 550 | 90 | 26 | 1450 | 615 | | | 327,7 |
| **100-315A** | 18,5 | 180M | 140 | 470 | 300 | 315 | 50 | 1400 | 230 | 940 | 610 | 550 | 90 | 26 | 1450 | 615 | | | 348,3 |
| **100-400C** | 22 | 180L | 140 | 530 | 365 | 355 | 85 | 1600 | 270 | 1060 | 660 | 600 | 110 | 26 | 1630 | 720 | | | 469,5 |
| **100-400B** | 30 | 200L | 140 | 530 | 365 | 355 | 85 | 1600 | 270 | 1060 | 660 | 600 | 110 | 26 | 1630 | 720 | | | 540,8 |
| **100-400A** | 37 | 225S | 140 | 530 | 365 | 355 | 85 | 1600 | 270 | 1060 | 660 | 600 | 110 | 26 | 1630 | 720 | | | 554,3 |
| **125-250B** | 11 | 160M | 140 | 470 | 300 | 355 | 50 | 1250 | 205 | 840 | 540 | 490 | 90 | 22 | 1358 | 655 | | | 308,1 |
| **125-250A** | 15 | 160L | 140 | 470 | 300 | 355 | 50 | 1400 | 230 | 940 | 610 | 550 | 90 | 26 | 1450 | 655 | | | 340,1 |
| **125-315C** | 22 | 180L | 140 | 530 | 365 | 355 | 85 | 1600 | 270 | 1060 | 660 | 600 | 110 | 26 | 1630 | 720 | | | 464,4 |
| **125-315B** | 30 | 200L | 140 | 530 | 365 | 355 | 85 | 1600 | 270 | 1060 | 660 | 600 | 110 | 26 | 1630 | 720 | 150 | 125 | 535,8 |
| **125-315A** | 37 | 225S | 140 | 530 | 365 | 355 | 85 | 1600 | 270 | 1060 | 660 | 600 | 110 | 26 | 1630 | 720 | | | 549,3 |
| **125-400C** | 45 | 225M | 140 | 530 | 400 | 400 | 85 | 1600 | 270 | 1060 | 660 | 600 | 110 | 26 | 1630 | 800 | | | 659,2 |
| **125-400B** | 55 | 250M | 140 | 530 | 400 | 400 | 85 | 1600 | 270 | 1060 | 660 | 600 | 110 | 26 | 1630 | 800 | | | 756,0 |
| **125-400A** | 75 | 280S | 140 | 530 | 400 | 400 | 85 | 1800 | 300 | 1200 | 730 | 670 | 110 | 26 | 1830 | 805 | | | 939,4 |
| **150-315D** | 30 | 200L | 160 | 530 | 365 | 400 | 85 | 1800 | 300 | 1200 | 730 | 670 | 110 | 26 | 1850 | 765 | | | 570,7 |
| **150-315C** | 37 | 225S | 160 | 530 | 365 | 400 | 85 | 1800 | 300 | 1200 | 730 | 670 | 110 | 26 | 1850 | 765 | | | 584,2 |
| **150-315B** | 45 | 225M | 160 | 530 | 365 | 400 | 85 | 1800 | 300 | 1200 | 730 | 670 | 110 | 26 | 1850 | 765 | | | 672,1 |
| **150-315A** | 55 | 250M | 160 | 530 | 365 | 400 | 85 | 1800 | 300 | 1200 | 730 | 670 | 110 | 26 | 1850 | 765 | 200 | 150 | 768,9 |
| **150-400C** | 75 | 280S | 160 | 530 | 400 | 450 | 85 | 1800 | 300 | 1200 | 730 | 670 | 110 | 26 | 1850 | 850 | | | 951,4 |
| **150-400B** | 75 | 280S | 160 | 530 | 400 | 450 | 85 | 1800 | 300 | 1200 | 730 | 670 | 110 | 26 | 1850 | 850 | | | 962,8 |
| **150-400A** | 90 | 280M | 160 | 530 | 400 | 450 | 85 | 1800 | 300 | 1200 | 730 | 670 | 110 | 26 | 1850 | 850 | | | 1057,8 |

# CM Serie-Mechanical seal and bearings

| MECHANICAL SEAL | PUMP MODEL | SHAFT Ø | | STANDARD MATERIAL | OPTIONAL | | | |
|---|---|---|---|---|---|---|---|---|
| | | | | | E | V | 2E | 2V |
| | 32-160, 40-125 | 20mm | ***Rotating face*** | Ceramic | Ceramic | - | SiC | SiC |
| | | | ***Stationary face*** | Graphite | Graphite | - | SiC | SiC |
| | | | ***Elastomer*** | NBR | EPDM | - | EPDM | FKM |
| | 40-250M | 28mm | ***Rotating face*** | Ceramic | - | - | SiC | SiC |
| | | | ***Stationary face*** | Graphite | - | - | SiC | SiC |
| | | | ***Elastomer*** | EPDM | - | - | EPDM | FKM |
| | 32-200, 32-250, 40-160, 40-200, 40-250, 50-125, 50-160, 50-200, 50-250, 65-125, 65-160, 65-200, 80-160 | 28mm | ***Rotating face*** | Ceramic | Ceramic | Ceramic | SiC | SiC |
| | | | ***Stationary face*** | Graphite | Graphite | Graphite | SiC | SiC |
| | | | ***Elastomer*** | NBR | EPDM | FKM | EPDM | FKM |
| | 65-250, 80-200, 100-160 | 40mm | ***Rotating face*** | CrNi-steel | CrNi-steel | CrNi-steel | SiC | SiC |
| | | | ***Stationary face*** | Graphite | Graphite | Graphite | SiC | SiC |
| | | | ***Elastomer*** | NBR | EPDM | FKM | EPDM | FKM |

| BEARINGS | PUMP MODEL | TYPE | |
|---|---|---|---|
| | 32-200C, 40-160B, 40-160A, 50-125B, 50-125A | 6204-ZZ | 6206-ZZ C3 |
| | 32-160C, 32-160B, 32-160A, 40-125C, 40-125B, 40-125A | 6205-ZZ C3 | 6203-ZZ |
| | 1~ 32-200C, 32-200B1, 32-200B, 32-200A1, 32-200A, 32-250C, 32-250B, 1~ 40-160A, 40-160AP, 40-200B1, 40-200B, 40-200A1, 40-200A, 40-200AP, 40-250C, 40-250B, 1~ 50-125A, 50-160B1, 50-160B, 50-160A1, 50-160A, 50-200C, 50-200B, 65-125B1, 65-125B, 65-125A1, 65-125A, 65-160C, 65-160B, 80-160E, 80-160D | 6206-ZZ C3 | 6306-ZZ C3 |
| | 32-250A1, 40-250A1, 50-200A1, 50-200C1, 65-160A1, 65-200C1, 80-160C1 | 6308-ZZ C3 | 6306-ZZ C3 |
| | 32-250A, 40-250A, 40-250BM, 40-250AM, 50-200A, 50-250C, 50-250B, 50-250A, 65-160A, 65-200C, 65-200B, 65-200A, 80-160C, 80-160B, 80-160A | 6308-ZZ C3 | 6309-ZZ C3 |
| | 65-250B, 65-250A, 80-200B, 80-200A, 100-160B, 100-160A | 6309-ZZ C3 | 6310-ZZ C3 |

# CMG Serie-Mechanical seal and bearings

| MECHANICAL SEAL | PUMP MODEL | SHAFT Ø | | STANDARD MATERIAL | OPTIONAL | | | |
|---|---|---|---|---|---|---|---|---|
| | | | | | E | V | 2E | 2V |
| | 80-250, 100-200, 100-250 | 45mm | ***Rotating face***<br>***Stationary face***<br>***Elastomer*** | CrNi-steel<br>Graphite<br>NBR | CrNi-steel<br>Graphite<br>EPDM | CrNi-steel<br>Graphite<br>FKM | SiC<br>SiC<br>EPDM | SiC<br>SiC<br>FKM |

| MOTOR BEARINGS | PUMP MODEL | TYPE | |
|---|---|---|---|
| | 80-250, 100-200 | 6313-ZZ C3 | 6313-ZZ C3 |
| | 80-250, 100-200, 100-250 | 6314-ZZ C3 | 6314-ZZ C3 |

# CA-4CA Serie-Mechanical seal and bearings

| MECHANICAL SEAL | PUMP MODEL | SHAFT Ø | | STANDARD MATERIAL | OPTIONAL | | | |
|---|---|---|---|---|---|---|---|---|
| | | | | | E | V | 2E | 2V |
| | 32-160, 40-125 | 20mm | ***Rotating face***<br>***Stationary face***<br>***Elastomer*** | Ceramic<br>Graphite<br>NBR | Ceramic<br>Graphite<br>EPDM | -<br>-<br>- | SiC<br>SiC<br>EPDM | SiC<br>SiC<br>FKM |
| | 40-250M | 28mm | ***Rotating face***<br>***Stationary face***<br>***Elastomer*** | Ceramic<br>Graphite<br>EPDM | -<br>-<br>- | -<br>-<br>- | SiC<br>SiC<br>EPDM | SiC<br>SiC<br>FKM |
| | 32-200, 32-250, 40-160, 40-200, 40-250, 50-125, 50-160, 50-200, 50-250, 65-125, 65-160, 65-200, 80-160 | 28mm | ***Rotating face***<br>***Stationary face***<br>***Elastomer*** | Ceramic<br>Graphite<br>NBR | Ceramic<br>Graphite<br>EPDM | Ceramic<br>Graphite<br>FKM | SiC<br>SiC<br>EPDM | SiC<br>SiC<br>FKM |
| | 50-315, 65-250, 65-315M, 80-200, 80-315, 100-315 | 40mm | ***Rotating face***<br>***Stationary face***<br>***Elastomer*** | CrNi-steel<br>Graphite<br>NBR | CrNi-steel<br>Graphite<br>EPDM | CrNi-steel<br>Graphite<br>FKM | SiC<br>SiC<br>EPDM | SiC<br>SiC<br>FKM |
| | 50-315N, 65-315N, 80-315N | 40mm | ***Rotating face***<br>***Stationary face***<br>***Elastomer*** | Graphite<br>SiC<br>FKM | Graphite<br>SiC<br>EPDM | -<br>-<br>- | -<br>-<br>- | -<br>-<br>- |
| | 80-250, 100-200, 100-250, 125-250 | 45mm | ***Rotating face***<br>***Stationary face***<br>***Elastomer*** | CrNi-steel<br>Graphite<br>NBR | CrNi-steel<br>Graphite<br>EPDM | CrNi-steel<br>Graphite<br>FKM | SiC<br>SiC<br>EPDM | SiC<br>SiC<br>FKM |
| | 100-400, 125-315, 125-400, 150-315, 150-400 | 55mm | ***Rotating face***<br>***Stationary face***<br>***Elastomer*** | Graphite<br>SiC<br>FKM | -<br>-<br>- | -<br>-<br>- | SiC<br>SiC<br>EPDM | SiC<br>SiC<br>FKM |
| | 200-315, 200-400, 250-315, 250-400 | 70mm | ***Rotating face***<br>***Stationary face***<br>***Elastomer*** | Graphite<br>SiC<br>FKM | -<br>-<br>- | -<br>-<br>- | SiC<br>SiC<br>EPDM | SiC<br>SiC<br>FKM |

| PUMP BEARINGS | PUMP MODEL | TYPE | |
|---|---|---|---|
| | 32-160, 32-200, 32-250, 40-125, 40-160, 40-200, 40-250, 40-250M, 50-125, 50-160, 50-200, 50-250, 65-125, 65-160, 65-200, 80-160 | 6306-ZZ C3 | 6306-ZZ C3 |
| | 50-315, 65-250, 65-315, 80-200, 80-315, 100-315 | 3208-ZZ C3 | 3208-ZZ C3 |
| | 50-315N, 65-315N, 80-250, 80-315N, 100-200, 100-250, 125-250 | 6209-ZZ C3 | 6309-ZZ C3 |
| | 100-400, 125-315, 125-400, 150-315, 150-400 | 6211-ZZ C3 | 6311-ZZ C3 |
| | 200-315, 200-400, 250-315, 250-400, 250-400 | 6313-ZZ C3 | 6313-ZZ C3 |

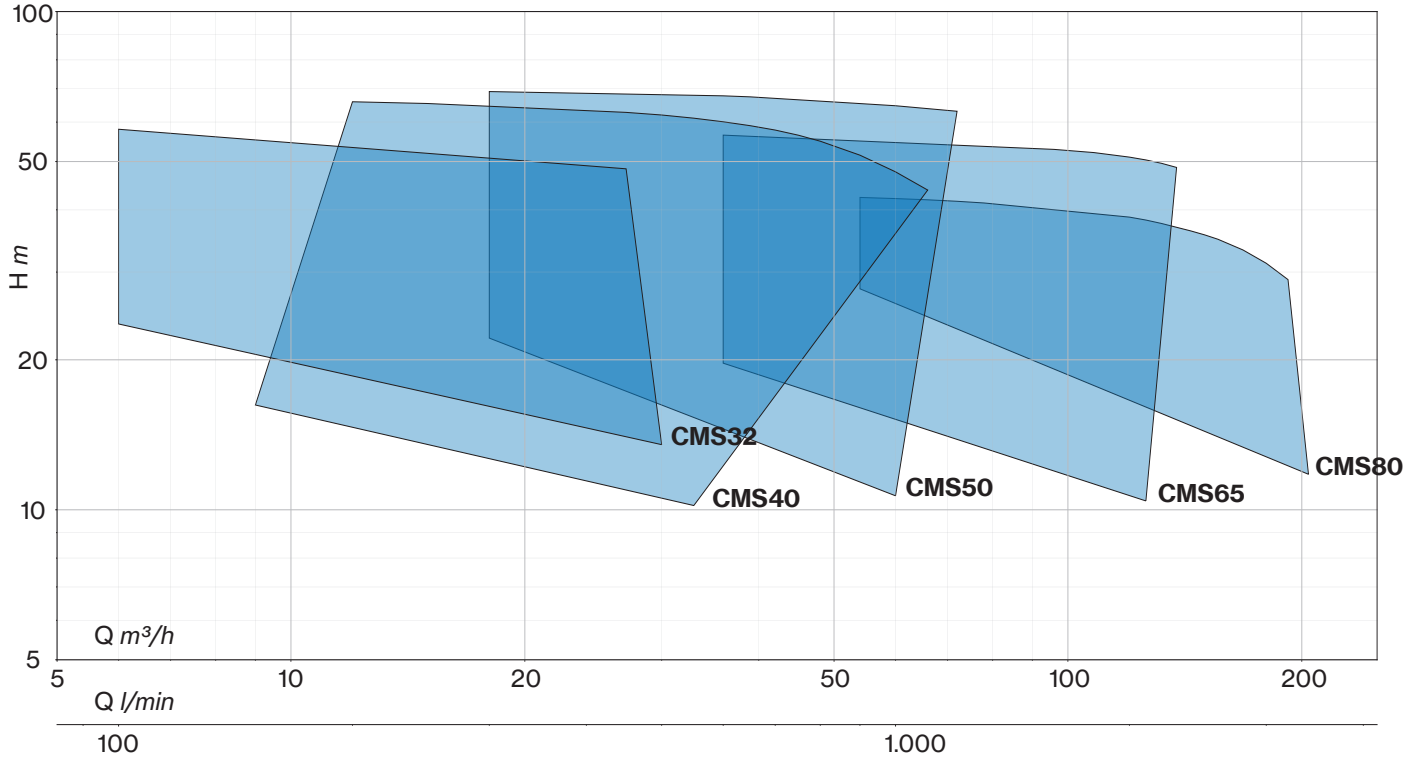
100
50
20
10
5
H m
CMS32
CMS40
CMS50
CMS65
CMS80
Q m³/h
5
10
20
50
100
200
Q l/min
100
1.000

# CMS

## Centrifugal Flanged

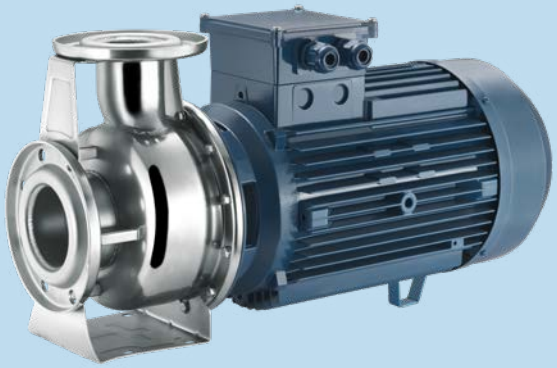

Monobloc horizontal centrifugal pumps made of stainless steel. Widely used in water supplies, pressurization, cooling, and industrial applications. The pumps guarantee small change in pressure for large flow variation.

| Construction features | |
|---|---|
| **Pump body** | stainless steel AISI 304 |
| **Motor bracket** | cast iron |
| **Impeller** | stainless steel AISI 304 |
| **Mechanical seal** | ceramic-graphite-NBR |
| **Mechanical seal housing** | stainless steel AISI 304 |
| **Pump shaft wet end** | stainless steel AISI 304 |
| **Liquid temperature** | -10 ÷ +90 °C |
| **Operating pressure** | max 10 bar |

| Motor | |
|---|---|
| **2 poles induction motor** | 3~ 230/400V - 50Hz P ⩽ 4kW<br>3~ 400/690V - 50Hz P > 4kW<br><br>1~ 230V-50Hz |
| **Insulation class** | F |
| **Protection degree** | IPX5 |
| **Motor efficiency** | IE3 |

**CMS 32 BE / 1,5 -2E -WF**

- counter flange: (blank) with; **WF** without
- mech. seal and O-rings: (blank) standard; **E** EPDM; **V** FKM; **2E** SiC-SiC-EPDM; **2V** SiC-SiC-FKM
- nominal power (kW)
- pump type

| TYPE - 50 Hz | P2 | | P1 | | CURRENT | | Q (m³/h - l/min) | | | | | | | | | |
|---|---|---|---|---|---|---|---|---|---|---|---|---|---|---|---|---|
| | | | 1~ | 3~ | 1~ 230V | 3~ 400V | 0 | 6 | 9 | 12 | 15 | 18 | 21 | 24 | 27 | 30 |
| | | | | | | | 0 | 100 | 150 | 200 | 250 | 300 | 350 | 400 | 450 | 500 |
| | HP | kW | kW | | A | | H (m) | | | | | | | | | |
| **32BE/1,5** | 2 | 1,5 | 2,0 | 1,9 | 9,2 | 3,6 | 23,9 | 23,6 | 23,3 | 22,7 | 21,7 | 20,4 | 18,8 | 17,1 | 15,4 | 13,5 |
| **32BE/2,2** | 3 | 2,2 | 2,4 | 2,3 | 11,0 | 4,5 | 29,5 | 28,9 | 28,2 | 27,4 | 26,4 | 24,9 | 22,9 | 20,9 | 18,7 | 16,4 |
| **32CE/3** | 4 | 3 | - | 3,4 | - | 6,3 | 36,9 | 34,8 | 33,9 | 33,0 | 31,9 | 30,7 | 29,3 | 27,8 | 26,1 | 24,3 |
| **32CE/4** | 5,5 | 4 | 4,9 | 4,8 | 22,2 | 8,8 | 49,7 | 46,6 | 45,0 | 43,9 | 42,8 | 41,6 | 40,5 | 39,3 | 37,7 | |
| **32CE/5,5** | 7,5 | 5,5 | - | 6,6 | - | 11,7 | 63,9 | 58,0 | 56,3 | 55,0 | 53,6 | 52,1 | 50,7 | 49,5 | 48,3 | |

| TYPE - 50 Hz | P2 | | P1 | | CURRENT | | Q (m³/h - l/min) | | | | | | | | | | | | | | | | |
|---|---|---|---|---|---|---|---|---|---|---|---|---|---|---|---|---|---|---|---|---|---|---|---|
| | | | 1~ | 3~ | 1~ 230V | 3~ 400V | 0 | 9 | 12 | 15 | 18 | 21 | 24 | 27 | 30 | 33 | 36 | 39 | 42 | 45 | 48 | 54 | 60 | 66 |
| | | | | | | | 0 | 150 | 200 | 250 | 300 | 350 | 400 | 450 | 500 | 550 | 600 | 650 | 700 | 750 | 800 | 900 | 1000 | 1100 |
| | HP | kW | kW | | A | | H (m) | | | | | | | | | | | | | | | | | |
| **40BE/1,5** | 2 | 1,5 | 1,8 | 1,7 | 8,5 | 3,3 | 16,4 | 16,2 | 15,9 | 15,6 | 14,9 | 14,2 | 13,4 | 12,5 | 11,4 | 10,2 | | | | | | | | |
| **40BE/2,2** | 3 | 2,2 | 2,5 | 2,4 | 11,6 | 4,7 | 21,5 | 21,6 | 21,5 | 21,2 | 20,7 | 20,0 | 19,1 | 18,1 | 17,0 | 15,8 | 14,6 | 13,4 | | | | | | |
| **40BE/3** | 4 | 3 | - | 3,4 | - | 6,3 | 27,1 | | 26,9 | 26,6 | 26,2 | 25,6 | 24,8 | 23,8 | 22,7 | 21,5 | 20,3 | 19,0 | 17,7 | 16,3 | | | | |
| **40BE/4** | 5,5 | 4 | 4,3 | 4,1 | 19,7 | 7,8 | 36,6 | | 34,8 | 34,4 | 33,6 | 32,4 | 31,0 | 29,5 | 27,8 | 25,8 | 23,7 | 21,5 | 19,3 | 17,0 | | | | |
| **40CE/5,5** | 7,5 | 5,5 | - | 5,5 | - | 10,2 | 44,4 | | 42,6 | 42,1 | 41,4 | 40,4 | 39,4 | 38,2 | 36,8 | 35,2 | 33,4 | 31,5 | 29,5 | 27,5 | 25,4 | 21,0 | | |
| **40CE/7,5** | 10 | 7,5 | - | 7,4 | - | 13,5 | 54,0 | | 52,4 | 51,5 | 50,2 | 49,0 | 47,8 | 46,6 | 45,3 | 43,9 | 42,2 | 40,3 | 38,3 | 36,2 | 34,0 | 29,1 | 24,5 | |
| **40CE/11** | 15 | 11 | - | 12,2 | - | 20,0 | 68,5 | | 65,9 | 65,4 | 64,7 | 64,0 | 63,4 | 62,8 | 62,0 | 61,1 | 60,1 | 59,0 | 57,8 | 56,5 | 54,9 | 51,5 | 47,7 | 43,8 |

| TYPE - 50 Hz | P2 | | P1 | | CURRENT | | Q (m³/h - l/min) | | | | | | | | | | | | | | | | |
|---|---|---|---|---|---|---|---|---|---|---|---|---|---|---|---|---|---|---|---|---|---|---|---|
| | | | 1~ | 3~ | 1~ 230V | 3~ 400V | 0 | 18 | 21 | 24 | 27 | 30 | 33 | 36 | 39 | 42 | 45 | 48 | 54 | 60 | 66 | 72 | 78 |
| | | | | | | | 0 | 300 | 350 | 400 | 450 | 500 | 550 | 600 | 650 | 700 | 750 | 800 | 900 | 1000 | 1100 | 1200 | 1300 |
| | HP | kW | kW | | A | | H (m) | | | | | | | | | | | | | | | | |
| **50AE/3** | 4 | 3 | - | 2,9 | - | 5,7 | 22,3 | 22,1 | 21,7 | 21,2 | 20,7 | 20,2 | 19,7 | 19,0 | 18,2 | 17,2 | 16,2 | 15,1 | 12,9 | 10,7 | | | |
| **50AE/4** | 5,5 | 4 | 4,4 | 4,2 | 20,0 | 8,0 | 26,0 | 25,8 | 25,6 | 25,3 | 25,1 | 24,9 | 24,6 | 24,2 | 23,6 | 22,9 | 22,2 | 21,4 | 19,8 | 18,1 | 16,4 | | |
| **50BE/5,5** | 7,5 | 5,5 | - | 6,4 | - | 11,5 | 34,9 | 34,6 | 34,3 | 33,9 | 33,5 | 33,3 | 33,0 | 32,6 | 32,1 | 31,4 | 30,7 | 30,0 | 28,4 | 26,7 | 24,8 | 22,7 | |
| **50CE/7,5** | 10 | 7,5 | - | 8,2 | - | 14,6 | 39,8 | 39,5 | 39,1 | 38,5 | 37,9 | 37,5 | 37,4 | 37,3 | 37,2 | 36,9 | 36,5 | 36,0 | 34,7 | 33,1 | 31,4 | 29,7 | 27,9 |
| **50CE/11** | 15 | 11 | - | 12,4 | - | 20,3 | 55,8 | 55,4 | 55,0 | 54,5 | 53,9 | 53,4 | 52,9 | 52,4 | 51,8 | 51,1 | 50,4 | 49,8 | 48,7 | 47,3 | 45,7 | 43,9 | 41,9 |
| **50CE1/15** | 20 | 15 | - | 15,0 | - | 25,1 | 65,9 | 63,1 | 62,7 | 62,7 | 62,4 | 62,2 | 61,8 | 61,3 | 60,7 | 60,0 | 59,4 | 58,8 | 57,6 | 56,4 | 55,0 | 53,4 | |
| **50CE/15** | 20 | 15 | - | 15,2 | - | 25,6 | 65,9 | 63,1 | 62,7 | 62,7 | 62,4 | 62,2 | 61,8 | 61,3 | 60,7 | 60,0 | 59,4 | 58,8 | 57,6 | 56,4 | 55,0 | 53,4 | |
| **50CE/18,5** | 25 | 18,5 | - | 18,2 | - | 30,6 | 69,6 | 69,1 | 68,5 | 68,3 | 68,2 | 68,1 | 67,9 | 67,7 | 67,4 | 66,9 | 66,3 | 65,9 | 65,4 | 64,7 | 63,8 | 63,1 | |

| TYPE - 50 Hz | P2 | | P1 | CUR. | Q (m³/h - l/min) | | | | | | | | | | | | | | | | | | |
|---|---|---|---|---|---|---|---|---|---|---|---|---|---|---|---|---|---|---|---|---|---|---|---|
| | | | | 3~ 400V | 0 | 36 | 39 | 42 | 45 | 48 | 54 | 60 | 66 | 72 | 78 | 84 | 90 | 96 | 108 | 120 | 126 | 132 | 138 |
| | | | | | 0 | 600 | 650 | 700 | 750 | 800 | 900 | 1000 | 1100 | 1200 | 1300 | 1400 | 1500 | 1600 | 1800 | 2000 | 2100 | 2200 | 2300 |
| | HP | kW | kW | A | H (m) | | | | | | | | | | | | | | | | | | |
| **65AE/5,5** | 7,5 | 5,5 | 6,2 | 11,2 | 20,3 | 19,7 | 19,6 | 19,5 | 19,4 | 19,3 | 19,1 | 18,7 | 18,3 | 17,7 | 17,1 | 16,4 | 15,8 | 15,1 | 13,7 | 11,6 | 10,4 | | |
| **65AE/7,5** | 10 | 7,5 | 8,4 | 15,0 | 25,1 | 24,2 | 24,0 | 23,9 | 23,8 | 23,8 | 23,6 | 23,5 | 23,3 | 23,1 | 22,5 | 21,9 | 21,2 | 20,4 | 18,9 | 17,2 | 16,2 | 15,0 | |
| **65BE/11** | 15 | 11 | 11,5 | 19,0 | 34,8 | 34,0 | 33,9 | 33,7 | 33,4 | 33,0 | 32,7 | 32,3 | 32,0 | 31,9 | 31,6 | 31,1 | 30,4 | 29,6 | 27,9 | 26,2 | 25,6 | | |
| **65BE1/15** | 20 | 15 | 15,1 | 25,3 | 41,9 | 41,3 | 41,2 | 41,0 | 40,8 | 40,5 | 39,9 | 39,5 | 39,1 | 38,8 | 38,7 | 38,6 | 38,3 | 37,9 | 37,0 | 36,0 | 35,8 | | |
| **65BE/15** | 20 | 15 | 15,5 | 26,1 | 41,9 | 41,3 | 41,2 | 41,0 | 40,8 | 40,5 | 39,9 | 39,5 | 39,1 | 38,8 | 38,7 | 38,6 | 38,3 | 37,9 | 37,0 | 36,0 | 35,8 | | |
| **65CE/18,5** | 25 | 18,5 | 18,8 | 31,6 | 49,7 | 49,0 | 48,7 | 48,4 | 48,2 | 48,0 | 47,6 | 47,3 | 47,2 | 47,1 | 46,9 | 46,6 | 46,2 | 45,9 | 45,0 | 43,5 | 42,5 | | |
| **65CE/22** | 30 | 22 | 23,3 | 39,6 | 58,1 | 56,5 | 56,2 | 55,9 | 55,7 | 55,4 | 54,9 | 54,3 | 53,9 | 53,7 | 53,5 | 53,4 | 53,2 | 52,9 | 52,1 | 51,0 | 50,4 | 49,6 | 48,7 |

| TYPE - 50 Hz | P2 | | P1 | CUR. | Q (m³/h - l/min) | | | | | | | | | | | | | | | | | | | | |
|---|---|---|---|---|---|---|---|---|---|---|---|---|---|---|---|---|---|---|---|---|---|---|---|---|---|
| | | | | 3~ 400V | 0 | 54 | 60 | 66 | 72 | 78 | 84 | 90 | 96 | 108 | 120 | 126 | 132 | 138 | 144 | 150 | 156 | 168 | 180 | 192 | 204 | 216 |
| | | | | | 0 | 900 | 1000 | 1100 | 1200 | 1300 | 1400 | 1500 | 1600 | 1800 | 2000 | 2100 | 2200 | 2300 | 2400 | 2500 | 2600 | 2800 | 3000 | 3200 | 3400 | 3600 |
| | HP | kW | kW | A | H (m) | | | | | | | | | | | | | | | | | | | | | |
| **80BE/11** | 15 | 11 | 12,1 | 19,9 | 27,3 | 27,8 | 27,6 | 27,3 | 26,9 | 26,4 | 25,9 | 25,3 | 24,6 | 23,3 | 22,0 | 21,4 | 20,9 | 20,3 | 19,7 | 19,2 | 18,6 | 17,3 | 15,7 | 13,9 | 11,8 | |
| **80BE1/15** | 20 | 15 | 14,9 | 25,0 | 32,2 | 32,8 | 32,6 | 32,3 | 32,0 | 31,6 | 31,1 | 30,6 | 30,1 | 28,9 | 27,7 | 27,0 | 26,3 | 25,7 | 25,1 | 24,5 | 23,9 | 22,5 | 20,9 | 19,3 | 17,8 | |
| **80BE/15** | 20 | 15 | 15,0 | 25,5 | 32,2 | 32,8 | 32,6 | 32,3 | 32,0 | 31,6 | 31,1 | 30,6 | 30,1 | 28,9 | 27,7 | 27,0 | 26,3 | 25,7 | 25,1 | 24,5 | 23,9 | 22,5 | 20,9 | 19,3 | 17,8 | |
| **80BE/18,5** | 25 | 18,5 | 20,0 | 33,2 | 38,4 | 38,7 | 38,5 | 38,2 | 37,9 | 37,5 | 37,1 | 36,7 | 36,3 | 35,6 | 34,6 | 33,9 | 33,2 | 32,5 | 31,9 | 31,3 | 30,7 | 29,4 | 28,1 | 26,7 | 25,1 | 23,3 |
| **80CE/22** | 30 | 22 | 21,7 | 36,4 | 41,9 | 42,4 | 42,1 | 41,9 | 41,6 | 41,3 | 40,9 | 40,5 | 40,0 | 39,4 | 38,7 | 38,2 | 37,6 | 36,9 | 36,3 | 35,6 | 34,9 | 33,2 | 31,2 | 29,0 | | |

# CMS

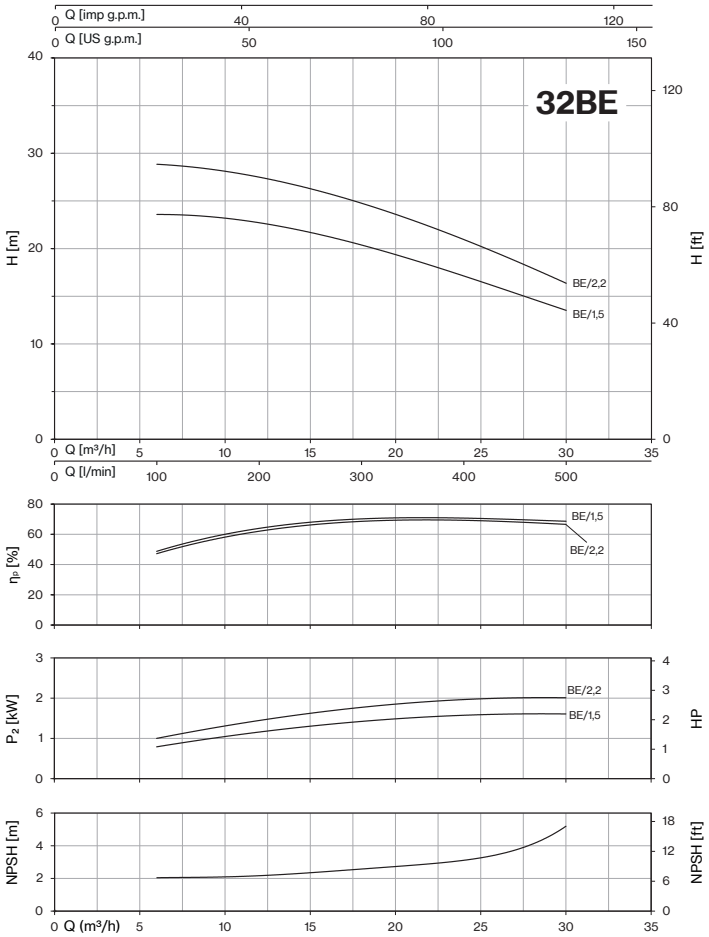
32BE
Q [imp g.p.m.]
Q [US g.p.m.]
H [m]
H [ft]
BE/2,2
BE/1,5
Q [m³/h]
Q [l/min]
ηP [%]
P2 [kW]
HP
NPSH [m]
NPSH [ft]
Q (m³/h)

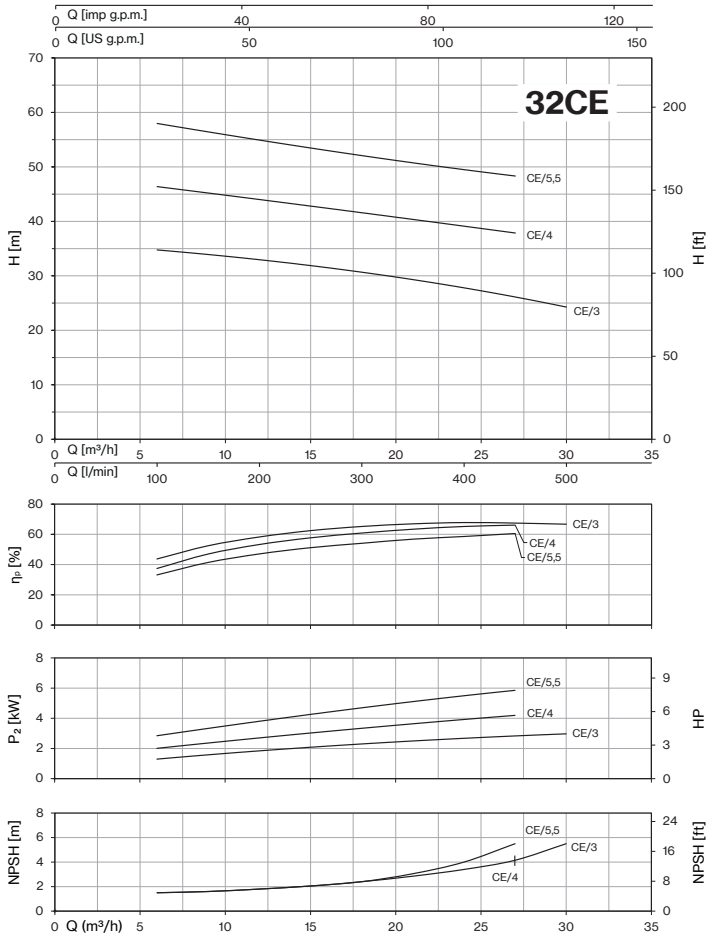
32CE
Q [imp g.p.m.]
Q [US g.p.m.]
H [m]
H [ft]
CE/5,5
CE/4
CE/3
Q [m³/h]
Q [l/min]
ηP [%]
P2 [kW]
HP
NPSH [m]
NPSH [ft]
Q (m³/h)

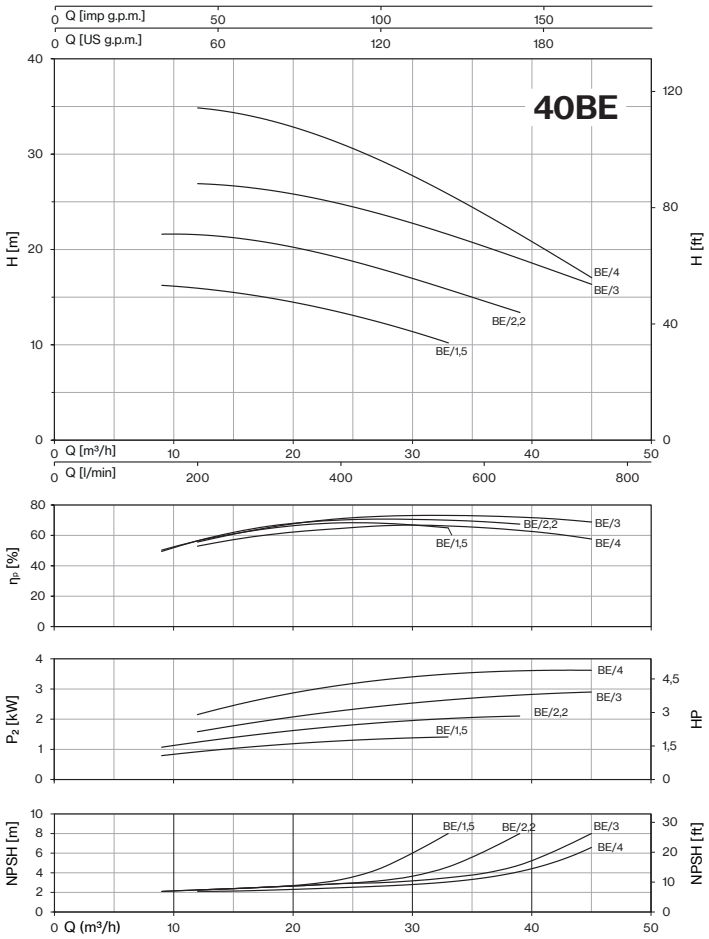
40BE
Q [imp g.p.m.]
Q [US g.p.m.]
H [m]
H [ft]
BE/4
BE/3
BE/2,2
BE/1,5
Q [m³/h]
Q [l/min]
ηP [%]
P2 [kW]
HP
NPSH [m]
NPSH [ft]
Q (m³/h)

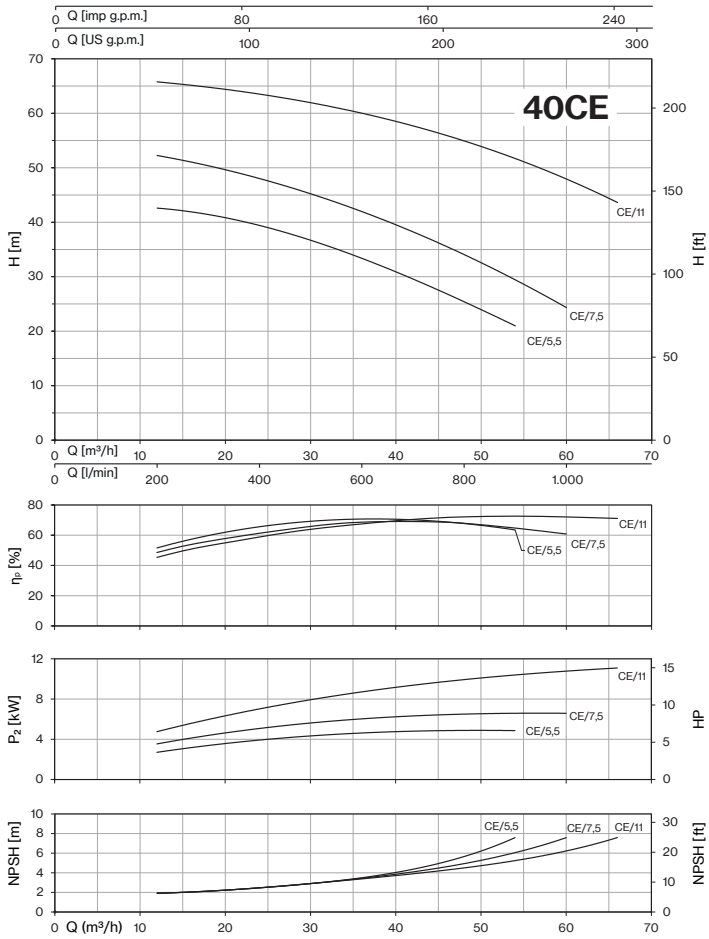
40CE
Q [imp g.p.m.]
Q [US g.p.m.]
H [m]
H [ft]
CE/11
CE/7,5
CE/5,5
Q [m³/h]
Q [l/min]
ηP [%]
P2 [kW]
HP
NPSH [m]
NPSH [ft]
Q (m³/h)

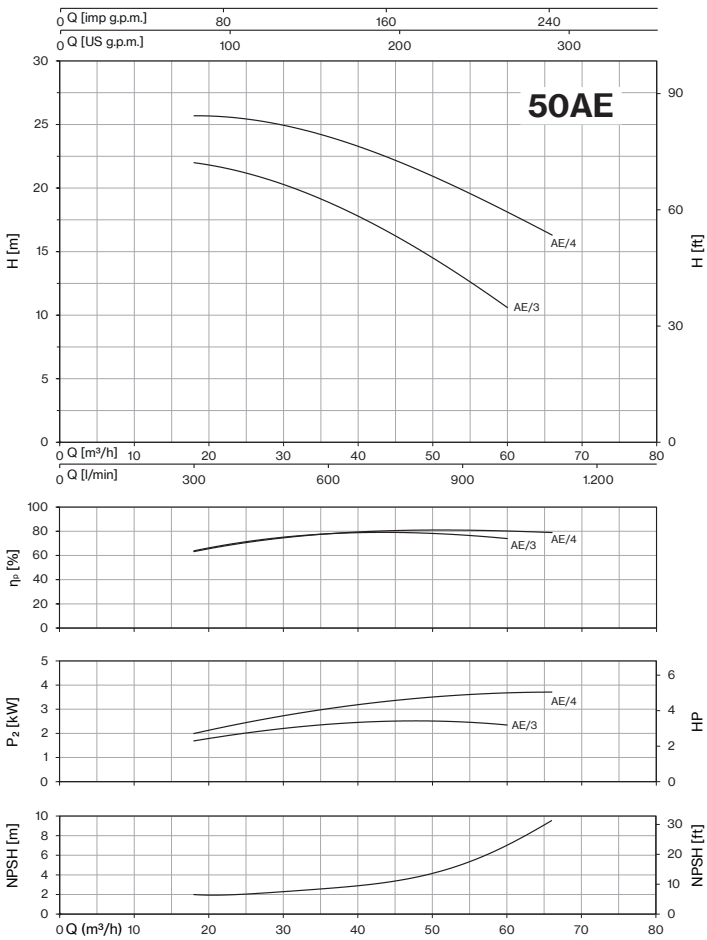
50AE
Q [imp g.p.m.]
Q [US g.p.m.]
H [m]
H [ft]
AE/4
AE/3
Q [m³/h]
Q [l/min]
ηp [%]
P2 [kW]
HP
NPSH [m]
NPSH [ft]
Q (m³/h)

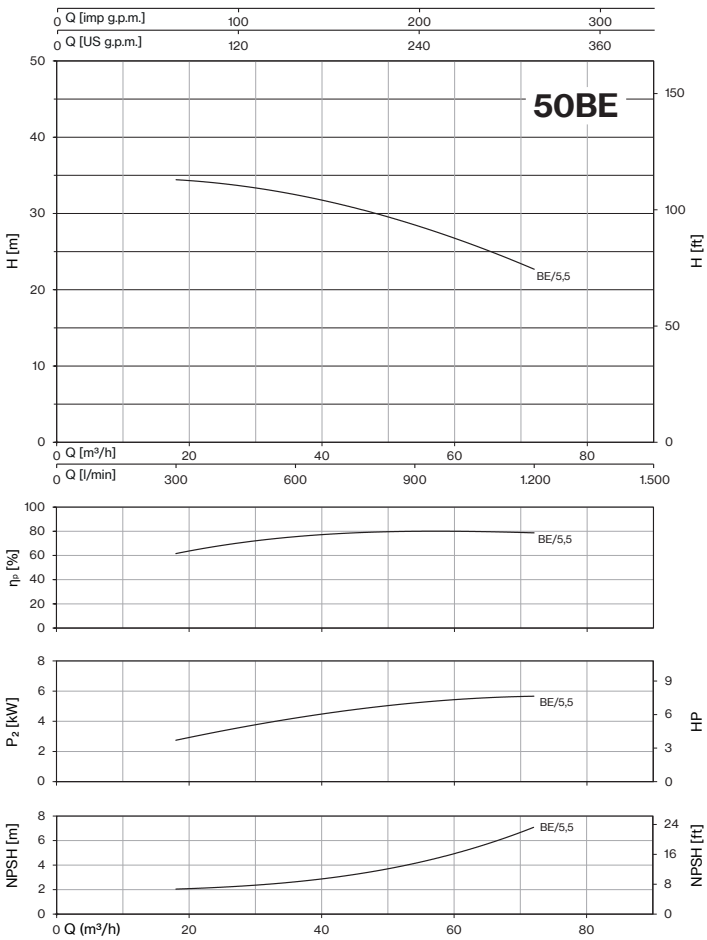
50BE
Q [imp g.p.m.]
Q [US g.p.m.]
H [m]
H [ft]
BE/5,5
Q [m³/h]
Q [l/min]
ηp [%]
P2 [kW]
HP
NPSH [m]
NPSH [ft]
Q (m³/h)

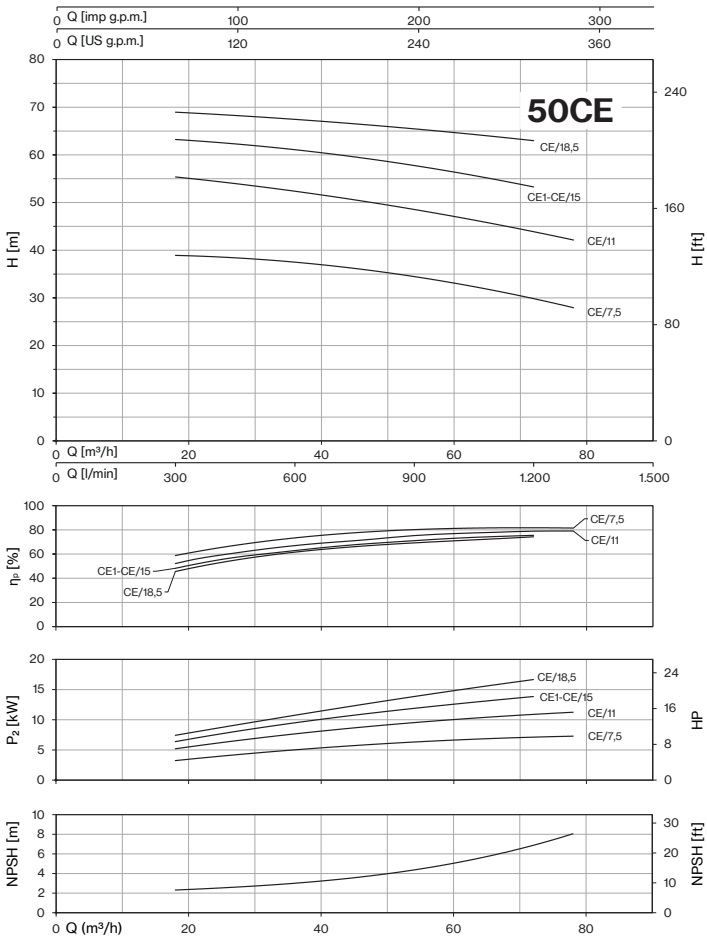
50CE
Q [imp g.p.m.]
Q [US g.p.m.]
H [m]
H [ft]
CE/18,5
CE1-CE/15
CE/11
CE/7,5
Q [m³/h]
Q [l/min]
ηp [%]
P2 [kW]
HP
NPSH [m]
NPSH [ft]
Q (m³/h)

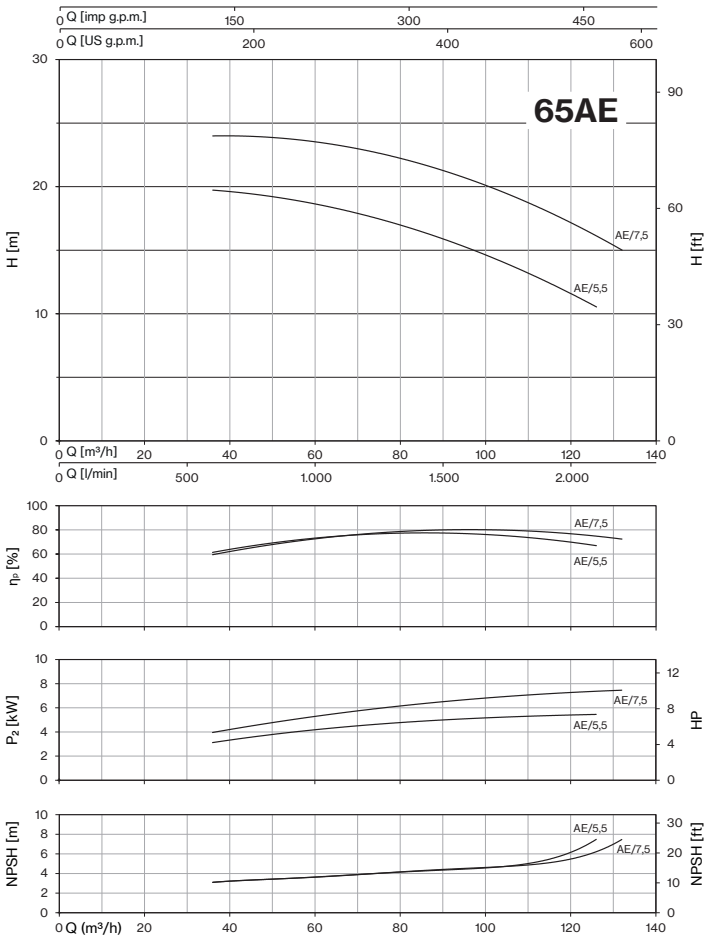
65AE
Q [imp g.p.m.]
Q [US g.p.m.]
H [m]
H [ft]
AE/7,5
AE/5,5
Q [m³/h]
Q [l/min]
ηp [%]
P2 [kW]
HP
NPSH [m]
NPSH [ft]
Q (m³/h)

# CMS

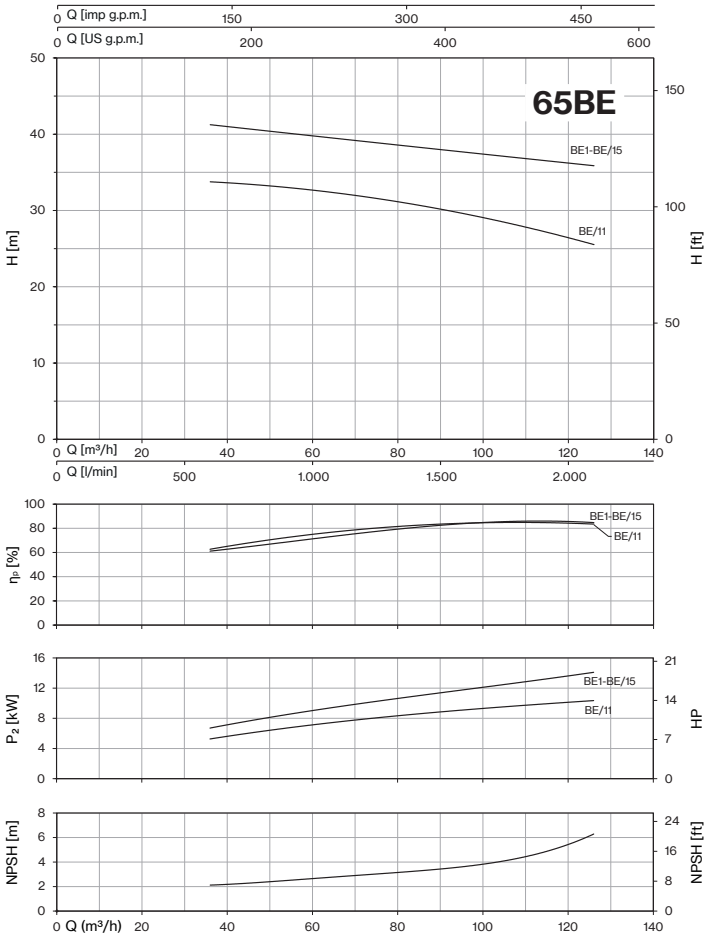
65BE
Q [imp g.p.m.]
Q [US g.p.m.]
H [m]
H [ft]
BE1-BE/15
BE/11
Q [m³/h]
Q [l/min]
ηp [%]
P2 [kW]
HP
NPSH [m]
NPSH [ft]
Q (m³/h)

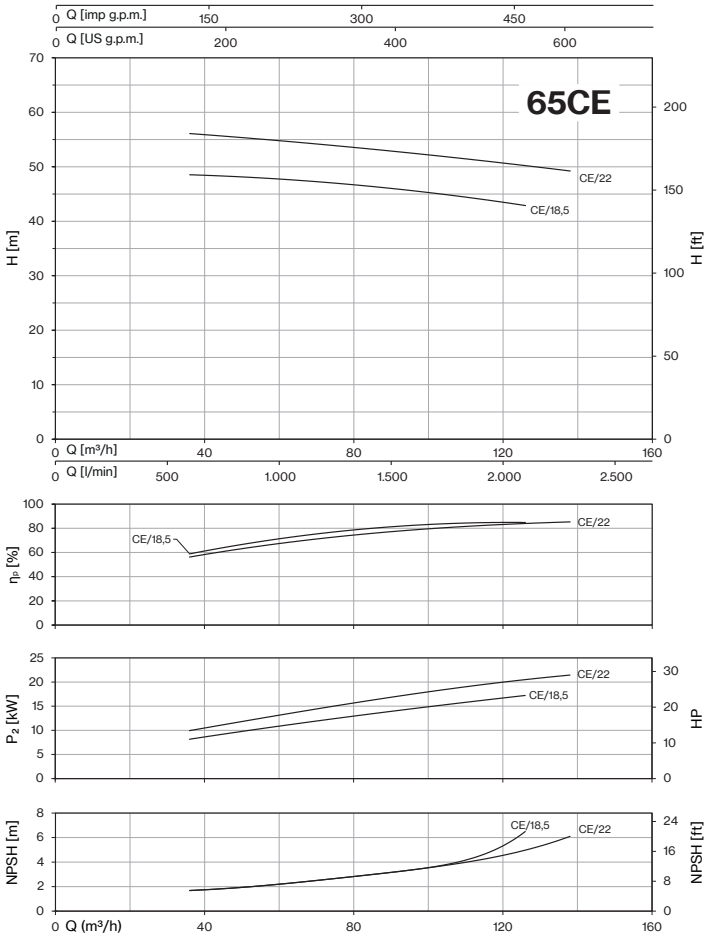
65CE
Q [imp g.p.m.]
Q [US g.p.m.]
H [m]
H [ft]
CE/22
CE/18,5
Q [m³/h]
Q [l/min]
ηp [%]
P2 [kW]
HP
NPSH [m]
NPSH [ft]
Q (m³/h)

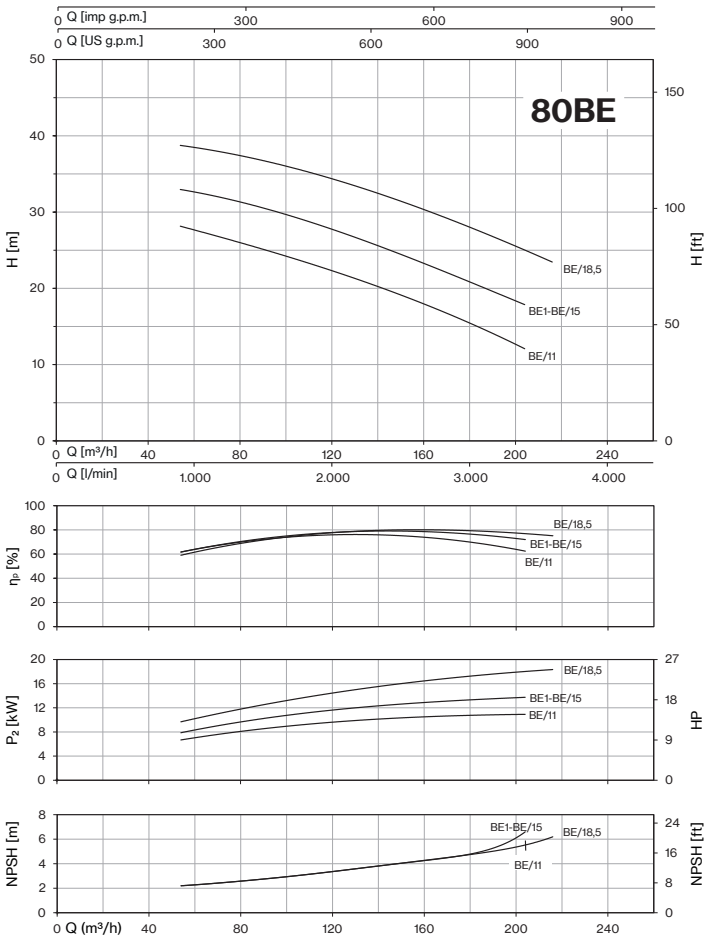
80BE
Q [imp g.p.m.]
Q [US g.p.m.]
H [m]
H [ft]
BE/18,5
BE1-BE/15
BE/11
Q [m³/h]
Q [l/min]
ηp [%]
P2 [kW]
HP
NPSH [m]
NPSH [ft]
Q (m³/h)

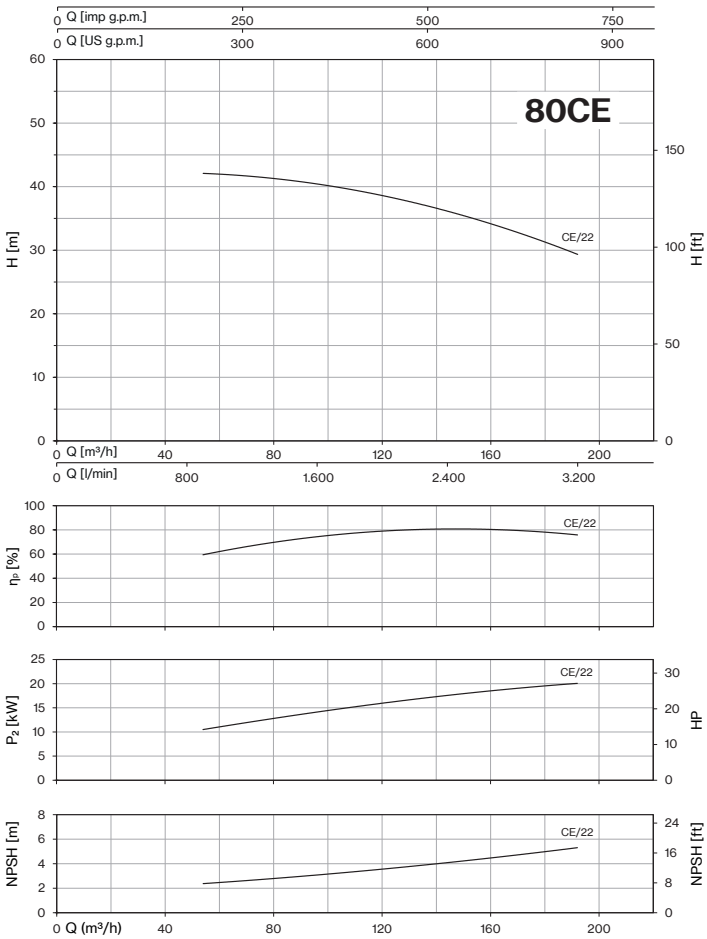
80CE
Q [imp g.p.m.]
Q [US g.p.m.]
H [m]
H [ft]
CE/22
Q [m³/h]
Q [l/min]
ηp [%]
P2 [kW]
HP
NPSH [m]
NPSH [ft]
Q (m³/h)

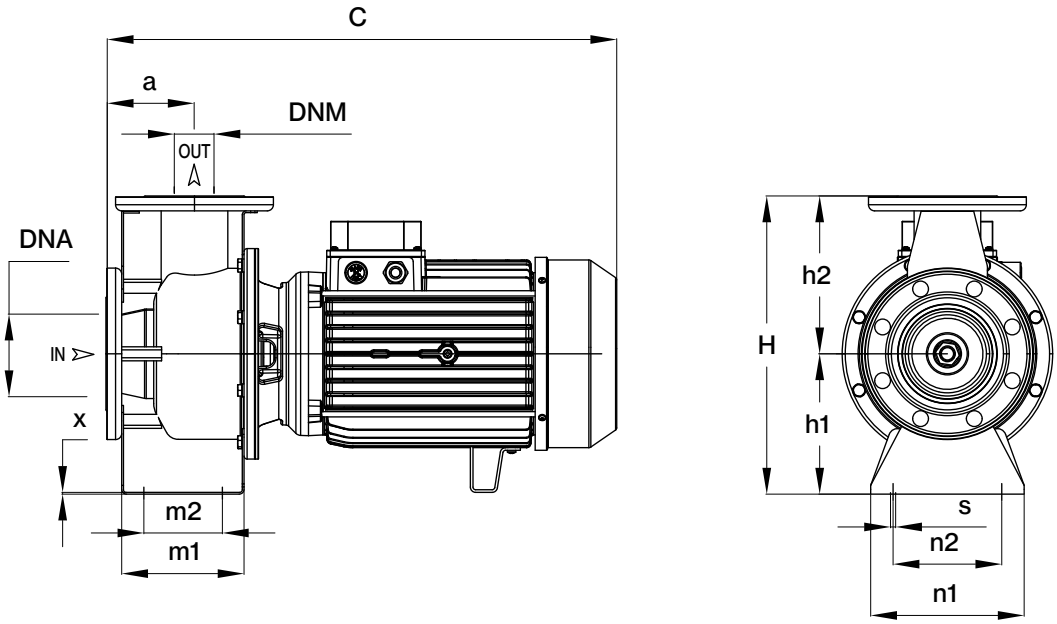


| TYPE | DIMENSIONS (mm) | | | | | | | | | | | | | | | | | | |
|---|---|---|---|---|---|---|---|---|---|---|---|---|---|---|---|---|---|---|---|
| | a | h1 | h2 | m1 | m2 | n1 | n2 | x | s | C (1~) | C (3~) | H | DNA | DNM | I | L | M | 1~ | 3~ |
| **32BE/1,5** | 80 | 132 | 140 | 125 | 75 | 175 | 148 | 2 | 10 | 501,5 | 501,5 | 272 | | | 555 | 255 | 345 | 28,5 | 27 |
| **32BE/2,2** | 80 | 132 | 140 | 125 | 75 | 175 | 148 | 2 | 10 | 501,5 | 501,5 | 272 | | | 555 | 255 | 345 | 33 | 29,5 |
| **32CE/3** | 80 | 160 | 180 | 125 | 75 | 175 | 148 | 2 | 10 | - | 506,5 | 340 | 50 | 32 | 625 | 310 | 430 | - | 35 |
| **32CE/4** | 80 | 160 | 180 | 125 | 75 | 175 | 148 | 2 | 10 | 571,5 | 526,5 | 340 | | | 625 | 310 | 430 | 51 | 42,5 |
| **32CE/5,5** | 80 | 160 | 180 | 125 | 75 | 175 | 148 | 2 | 10 | - | 571,5 | 340 | | | 625 | 310 | 430 | - | 51,5 |
| **40BE/1,5** | 80 | 132 | 160 | 125 | 75 | 175 | 148 | 2 | 10 | 506,5 | 506,5 | 292 | | | 555 | 255 | 345 | 28 | 26,5 |
| **40BE/2,2** | 80 | 132 | 160 | 125 | 75 | 175 | 148 | 2 | 10 | 506,5 | 506,5 | 292 | | | 555 | 255 | 345 | 32,5 | 29 |
| **40BE/3** | 80 | 132 | 160 | 125 | 75 | 175 | 148 | 2 | 10 | - | 506,5 | 292 | | | 555 | 255 | 345 | - | 32,5 |
| **40BE/4** | 80 | 132 | 160 | 125 | 75 | 175 | 148 | 2 | 10 | 566,5 | 521,5 | 292 | 65 | 40 | 555 | 255 | 345 | 48,5 | 40,5 |
| **40CE/5,5** | 100 | 160 | 180 | 140 | 93 | 175 | 148 | 2 | 10 | - | 586,5 | 340 | | | 625 | 310 | 430 | - | 51 |
| **40CE/7,5** | 100 | 160 | 180 | 140 | 93 | 175 | 148 | 2 | 10 | - | 586,5 | 340 | | | 625 | 310 | 430 | - | 57 |
| **40CE/11** | 100 | 160 | 180 | 140 | 93 | 175 | 148 | 2 | 10 | - | 616,5 | 340 | | | 670 | 350 | 525 | - | 80,5 |
| **50AE/3** | 100 | 132 | 160 | 125 | 75 | 175 | 148 | 2 | 10 | - | 506,5 | 292 | | | 555 | 255 | 345 | - | 33 |
| **50AE/4** | 100 | 132 | 160 | 125 | 75 | 175 | 148 | 2 | 10 | 571,5 | 526,5 | 292 | | | 555 | 255 | 345 | 49 | 40,5 |
| **50BE/5,5** | 100 | 160 | 180 | 140 | 93 | 175 | 148 | 2 | 10 | - | 586,5 | 340 | | | 625 | 310 | 430 | - | 51 |
| **50CE/7,5** | 100 | 160 | 200 | 140 | 93 | 175 | 148 | 2 | 10 | - | 586,5 | 360 | 65 | 50 | 625 | 310 | 430 | - | 57 |
| **50CE/11** | 100 | 160 | 200 | 140 | 93 | 175 | 148 | 2 | 10 | - | 616,5 | 360 | | | 670 | 350 | 525 | - | 80,5 |
| **50CE1/15** | 100 | 160 | 200 | 140 | 93 | 175 | 148 | 2 | 10 | - | 661,5 | 360 | | | 820 | 360 | 525 | - | 85 |
| **50CE/15** | 100 | 160 | 200 | 140 | 93 | 175 | 148 | 2 | 10 | - | 696,5 | 360 | | | 820 | 360 | 525 | - | 112 |
| **50CE/18,5** | 100 | 160 | 200 | 140 | 93 | 175 | 148 | 2 | 10 | - | 741,5 | 360 | | | 820 | 360 | 525 | - | 126 |
| **65AE/5,5** | 100 | 160 | 180 | 140 | 93 | 175 | 148 | 2 | 10 | - | 585 | 340 | | | 625 | 310 | 430 | - | 49,5 |
| **65AE/7,5** | 100 | 160 | 180 | 140 | 93 | 175 | 148 | 2 | 10 | - | 585 | 340 | | | 625 | 310 | 430 | - | 55,5 |
| **65BE/11** | 100 | 160 | 200 | 140 | 93 | 175 | 148 | 2 | 10 | - | 615 | 360 | | | 670 | 350 | 525 | - | 81 |
| **65BE1/15** | 100 | 160 | 200 | 140 | 93 | 175 | 148 | 2 | 10 | - | 660 | 360 | 80 | 65 | 820 | 360 | 525 | - | 85 |
| **65BE/15** | 100 | 160 | 200 | 140 | 93 | 175 | 148 | 2 | 10 | - | 695 | 360 | | | 820 | 360 | 525 | - | 112 |
| **65CE/18,5** | 100 | 180 | 225 | 140 | 93 | 175 | 148 | 2 | 10 | - | 740 | 405 | | | 820 | 360 | 525 | - | 126,5 |
| **65CE/22** | 100 | 180 | 225 | 140 | 93 | 175 | 148 | 2 | 10 | - | 740 | 405 | | | 820 | 360 | 525 | - | 137 |
| **80BE/11** | 125 | 180 | 225 | 167 | 93 | 175 | 148 | 2 | 10 | - | 649 | 405 | | | 820 | 360 | 525 | - | 82 |
| **80BE1/15** | 125 | 180 | 225 | 167 | 93 | 175 | 148 | 2 | 10 | - | 694 | 405 | | | 820 | 360 | 525 | - | 86 |
| **80BE/15** | 125 | 180 | 225 | 167 | 93 | 175 | 148 | 2 | 10 | - | 729 | 405 | 100 | 80 | 820 | 360 | 525 | - | 113 |
| **80BE/18,5** | 125 | 180 | 225 | 167 | 93 | 175 | 148 | 2 | 10 | - | 774 | 405 | | | 870 | 400 | 570 | - | 127,5 |
| **80CE/22** | 125 | 180 | 250 | 167 | 93 | 175 | 148 | 2 | 10 | - | 774 | 430 | | | 870 | 400 | 570 | - | 138 |

# CMS Serie-Mechanical seal and bearings

| MECHANICAL SEAL | PUMP MODEL | SHAFT Ø | | STANDARD MATERIAL | OPTIONAL | | | |
|---|---|---|---|---|---|---|---|---|
| | | | | | E | V | 2E | 2V |
| | 32BE/1,5 - 32BE/2,2 - 32CE/3 - 40BE/1,5 - 40BE/2,2 - 40BE/3 - 50AE/3 | 20mm | ***Rotating face***<br>***Stationary face***<br>***Elastomer*** | Ceramic<br>Graphite<br>NBR | Ceramic<br>Graphite<br>EPDM | -<br>-<br>- | SiC<br>SiC<br>EPDM | SiC<br>SiC<br>FKM |
| | 32CE/4 - 32CE/5,5 - 40BE/4 - 40CE/5,5 - 40CE/7,5 - 40CE/11 - 50AE/4 - 50BE/5,5 - 50CE/7,5 - 50CE/11 - 50CE/15 - 50CE1/15 - 50CE/18,5 - 65AE/5,5 - 65AE/7,5 - 65BE/11 - 65BE1/15 - 65BE/15 - 65CE/18,5 - 65CE/22 - 80BE/11 - 80BE1/15 - 80BE/15 - 80BE/18,5 - 80CE/22 | 28mm | ***Rotating face***<br>***Stationary face***<br>***Elastomer*** | Ceramic<br>Graphite<br>NBR | Ceramic<br>Graphite<br>EPDM | Ceramic<br>Graphite<br>FKM | SiC<br>SiC<br>EPDM | SiC<br>SiC<br>FKM |

| BEARINGS | PUMP MODEL | TYPE | |
|---|---|---|---|
| | 32CE/4 - 40BE/4 - 50AE/4 | 6204-ZZ | 6206-ZZ C3 |
| | 32BE/1,5 - 32BE/2,2 - 32CE/3 - 40BE/1,5 - 40BE/2,2 - 40BE/3 - 50AE/3 | 6205-ZZ C3 | 6203-ZZ |
| | 1~ 32CE/4 - 32CE/5,5 - 1~ 40BE/4 - 40CE/5,5 - 40CE/7,5 - 1~ 50AE/4 - 50BE/5,5 - 50CE/7,5 - 65AE/5,5 - 65AE/7,5 | 6206-ZZ C3 | 6306-ZZ C3 |
| | 40CE/11 - 50CE/11 - 65BE/11 - 80BE/11 | 6206-ZZ C3 | 6308-ZZ C3 |
| | 65BE1/15 - 50CE1/15 - 80BE1/15 | 6308-ZZ C3 | 6306-ZZ C3 |
| | 50CE/15 - 50CE/18,5 - 65BE/15 - 65CE/18,5 - 65CE/22 - 80BE/15 - 80BE/18,5 - 80CE/22 | 6308-ZZ C3 | 6309-ZZ C3 |

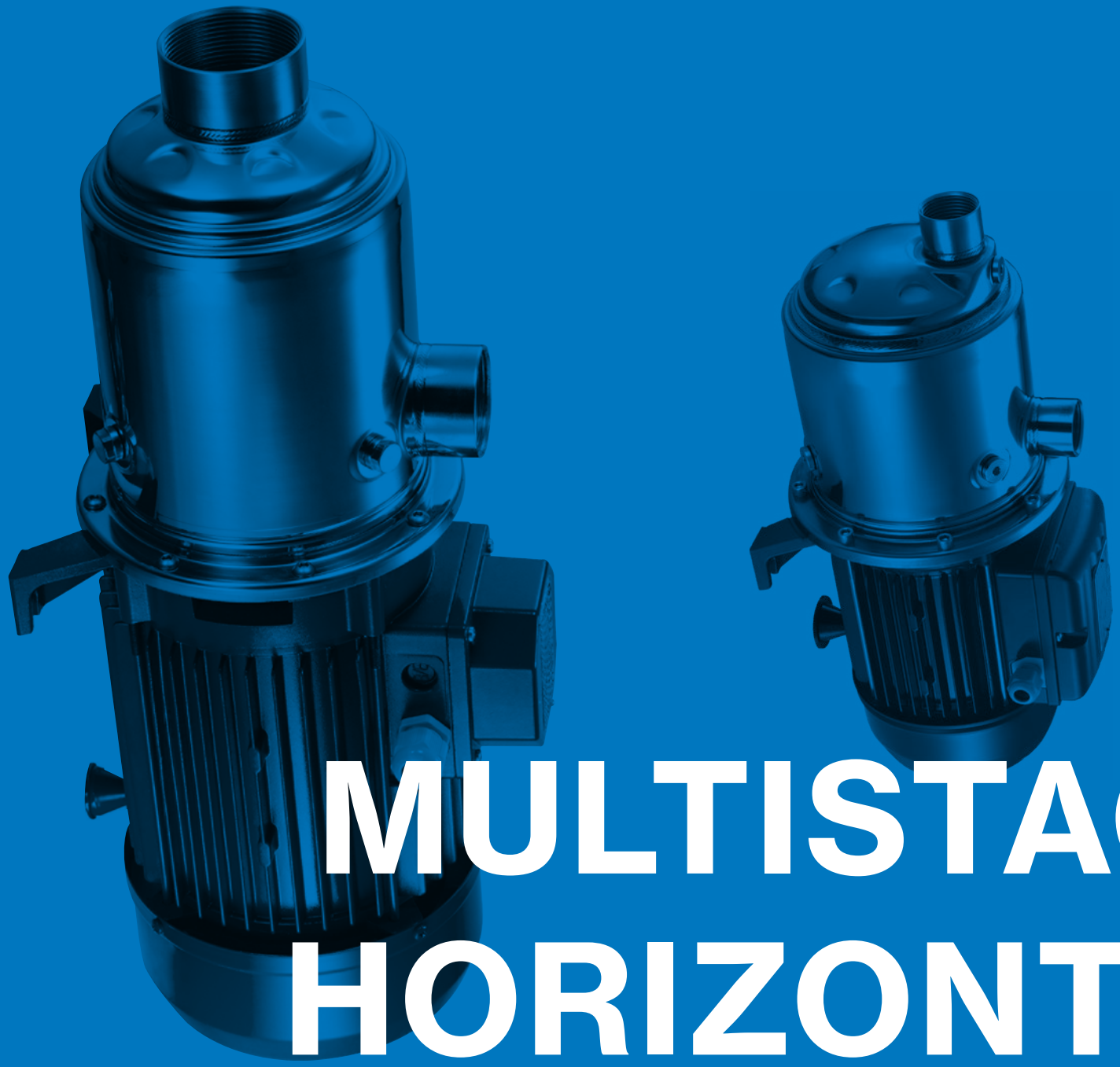

# MULTISTAGE HORIZONTAL

# MULTISTAGE HORIZONTAL PUMPS

ULTRA 3/ULTRA 3S

ULTRA 5/ULTRA 5S

ULTRA 7/ULTRA 7S

ULTRA 9/ULTRA 9S

ULTRA 18/ULTRA 18S

Range of horizontal multistage pumps, not self-priming, with axial suction and radial delivery threads, pump body in AISI 304 and hydraulic part in Noryl (ULTRA) and in AISI 304 (ULTRA S).

**Applications:**

- Handling of uncharged liquids
- For pressurization systems
- Irrigation
- Drinking water treatment
- Food industry
- Heating and conditioning
- Industrial washing systems

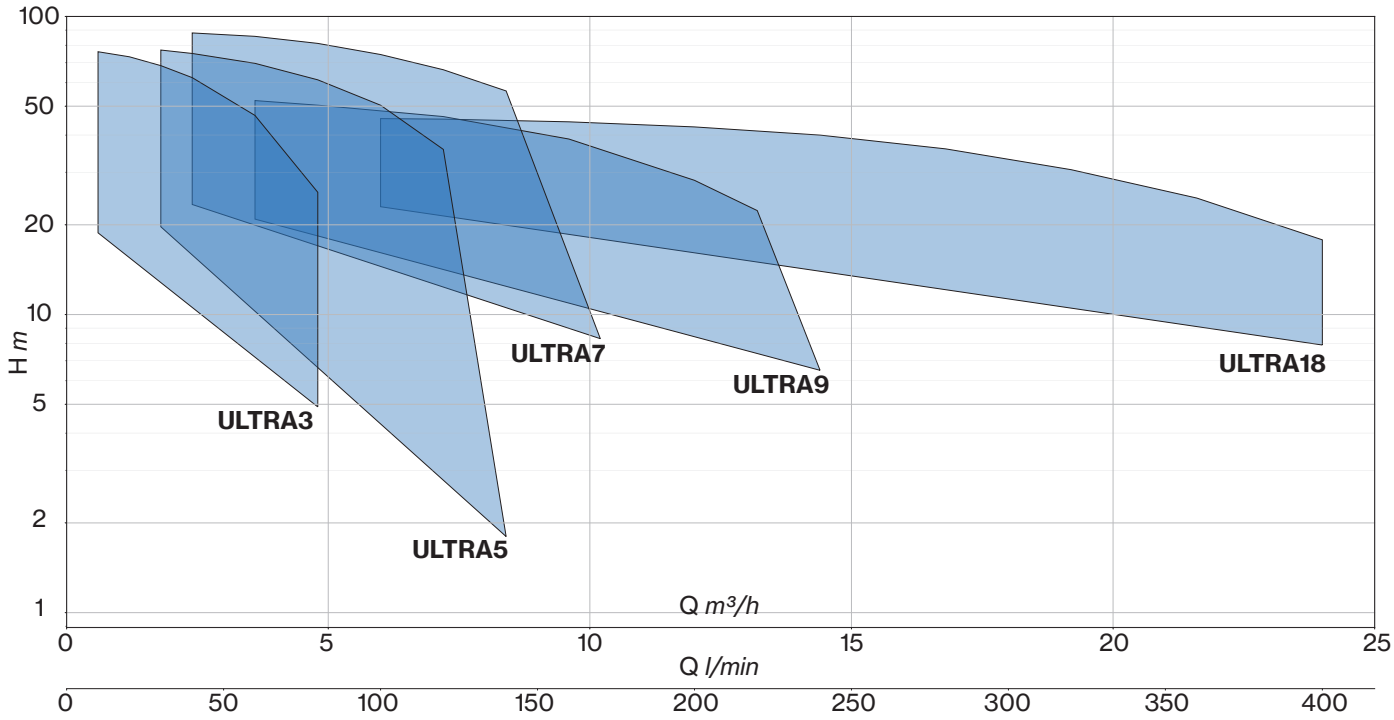
100
50
20
10
5
2
1
H m
ULTRA3
ULTRA5
ULTRA7
ULTRA9
ULTRA18
Q m³/h
0
5
10
15
20
25
Q l/min
0
50
100
150
200
250
300
350
400

# ULTRA

## Multistage Horizontal

ULTRA 3

ULTRA 5

ULTRA 7

ULTRA 9

ULTRA 18

Stainless steel multistage horizontal pumps. Pumping of clean non-loaded fluids, pressurizing system, irrigation, drinking and glycol water, water treatment, heating and air conditioning, washing system.

| Construction features | |
|---|---|
| **Pump body, mechanical seal housing** | stainless steel AISI 304 |
| **Motor bracket** | aluminum |
| **Impellers, diffusers** | Noryl® |
| **Mechanical seal** | ceramic-graphite-EPDM ≤ 6 impellers<br>graphite-silicon carbide-EPDM ≥ 7 impellers |
| **Motor shaft** | stainless steel AISI 303 |
| **Liquid temperature** | -5 ÷ +35 °C |
| **Operating pressure** | max 8,5 bar |

| Motor | |
|---|---|
| **2 poles induction motor** | 3~ 230/400V - 50Hz<br>1~ 230V - 50Hz<br>(with thermal protection up to 1,85 kW) |
| **Insulation class** | F |
| **Protection degree** | IPX4 |

**U 3 -120 / 6 T -WR**

- pump type: U
- nominal flow-rate m³/h: 3
- No. of impellers: 6
- motor: T = 3~; (blank) = 1~
- certification: -WR = WRAS approved; (blank) = standard
- mech. seal: -2 = Sic-Sic; (blank) = standard

WRAS APPROVED PRODUCT
CERTIFICATION MARK

| TYPE - 50 Hz | | P2 | | P1 | | CURRENT | | Q (m³/h - l/min) | | | | | | |
|---|---|---|---|---|---|---|---|---|---|---|---|---|---|---|
| 1~ | 3~ | | | 1~ | 3~ | 1~ 230V | 3~ 400V | 0 | 0,6 | 1,2 | 1,8 | 2,4 | 3,6 | 4,8 |
| | | | | | | | | 0 | 10 | 20 | 30 | 40 | 60 | 80 |
| | | HP | kW | kW | | A | | H (m) | | | | | | |
| **U 3-50/2** | **U 3-50/2T** | 0,5 | 0,37 | 0,45 | 0,46 | 2 | 0,9 | 20,2 | 18,8 | 17,3 | 15,3 | 13,7 | 9,5 | 4,9 |
| **U 3-70/3** | **U 3-70/3T** | 0,7 | 0,51 | 0,65 | 0,63 | 2,9 | 1,2 | 30,0 | 27,9 | 25,4 | 23,0 | 20,3 | 14,0 | 6,7 |
| **U 3-90/4** | **U 3-90/4T** | 0,9 | 0,66 | 0,9 | 0,88 | 4 | 1,8 | 40,8 | 38,3 | 35,1 | 31,8 | 27,9 | 19,8 | 10,4 |
| **U 3-100/5** | **U 3-100/5T** | 1 | 0,75 | 1,06 | 1,01 | 4,8 | 1,9 | 52,2 | 48,9 | 45,1 | 40,8 | 36,0 | 25,4 | 14,0 |
| **U 3-120/6** | **U 3-120/6T** | 1,2 | 0,9 | 1,23 | 1,23 | 5,6 | 2,6 | 62,8 | 58,7 | 54,5 | 49,6 | 43,9 | 32,1 | 18,3 |
| **U 3-150/7** | **U 3-150/7T** | 1,5 | 1,1 | 1,3 | 1,2 | 6,1 | 3,0 | 77,1 | 76,1 | 73,2 | 68,4 | 62,3 | 46,5 | 25,7 |

| TYPE - 50 Hz | | P2 | | P1 | | CURRENT | | Q (m³/h - l/min) | | | | | | | |
|---|---|---|---|---|---|---|---|---|---|---|---|---|---|---|---|
| 1~ | 3~ | | | 1~ | 3~ | 1~ 230V | 3~ 400V | 0 | 1,8 | 2,4 | 3,6 | 4,8 | 6 | 7,2 | 8,4 |
| | | | | | | | | 0 | 30 | 40 | 60 | 80 | 100 | 120 | 140 |
| | | HP | kW | kW | | A | | H (m) | | | | | | | |
| **U 5-70/2** | **U 5-70/2T** | 0,7 | 0,51 | 0,61 | 0,58 | 2,7 | 1,1 | 22,0 | 19,7 | 18,7 | 16,6 | 14,0 | 10,8 | 6,8 | 1,8 |
| **U 5-80/3** | **U 5-80/3T** | 0,8 | 0,6 | 0,86 | 0,79 | 3,9 | 1,5 | 33,4 | 30,3 | 29,0 | 26,0 | 22,5 | 17,6 | 12,0 | 3,9 |
| **U 5-120/4** | **U 5-120/4T** | 1,2 | 0,9 | 1,13 | 1,13 | 5,2 | 2,5 | 45,3 | 41,3 | 39,6 | 35,6 | 30,8 | 24,9 | 17,6 | 6,4 |
| **U 5-150/5** | **U 5-150/5T** | 1,5 | 1,1 | 1,4 | 1,4 | 6,6 | 3,1 | 57,6 | 55,6 | 54,2 | 50,5 | 45,0 | 37,0 | 27,4 | |
| **U 5-180/6** | **U 5-180/6T** | 2 | 1,5 | 1,6 | 1,6 | 7,4 | 3,3 | 69,1 | 66,5 | 64,8 | 60,1 | 53,2 | 43,8 | 32,0 | |
| **U 5-200/7** | **U 5-200/7T** | 2 | 1,5 | 1,9 | 1,8 | 8,6 | 3,6 | 80,6 | 77,1 | 75,1 | 69,6 | 61,3 | 50,4 | 35,8 | |

| TYPE - 50 Hz | | P2 | | P1 | | CURRENT | | Q (m³/h - l/min) | | | | | | | | |
|---|---|---|---|---|---|---|---|---|---|---|---|---|---|---|---|---|
| 1~ | 3~ | | | 1~ | 3~ | 1~ 230V | 3~ 400V | 0 | 2,4 | 3,6 | 4,8 | 6 | 7,2 | 8,4 | 9,6 | 10,2 |
| | | | | | | | | 0 | 40 | 60 | 80 | 100 | 120 | 140 | 160 | 170 |
| | | HP | kW | kW | | A | | H (m) | | | | | | | | |
| **U 7-100/2** | **U 7-100/2T** | 1 | 0,75 | 0,97 | 0,9 | 4,4 | 1,7 | 24,8 | 23,4 | 22,0 | 20,5 | 18,7 | 16,3 | 13,6 | 10,2 | 8,3 |
| **U 7-120/3** | **U 7-120/3T** | 1,2 | 0,9 | 1,32 | 1,3 | 5,9 | 2,6 | 36,7 | 34,0 | 32,0 | 29,6 | 26,5 | 23,0 | 18,6 | 13,8 | 11,0 |
| **U 7-180/4** | **U 7-180/4T** | 2 | 1,5 | 1,7 | 1,6 | 7,9 | 3,3 | 49,6 | 48,4 | 46,7 | 43,8 | 39,9 | 34,9 | 28,9 | | |
| **U 7-250/5** | **U 7-250/5T** | 2,5 | 1,85 | 2,2 | 2,0 | 9,9 | 4,0 | 63,2 | 62,1 | 60,3 | 56,9 | 52,1 | 46,2 | 39,0 | | |
| **U 7-300/6** | **U 7-300/6T** | 3 | 2,2 | 2,5 | 2,4 | 11,5 | 4,7 | 76,0 | 75,1 | 73,1 | 69,2 | 63,6 | 56,8 | 48,2 | | |
| **-** | **U 7-350/7T** | 3,5 | 2,57 | - | 2,8 | - | 5,1 | 89,0 | 88,0 | 85,8 | 81,2 | 74,5 | 66,3 | 56,2 | | |

| TYPE - 50 Hz | | P2 | | P1 | | CURRENT | | Q (m³/h - l/min) | | | | | | | |
|---|---|---|---|---|---|---|---|---|---|---|---|---|---|---|---|
| 1~ | 3~ | | | 1~ | 3~ | 1~ 230V | 3~ 400V | 0 | 3,6 | 4,8 | 7,2 | 9,6 | 12 | 13,2 | 14,4 |
| | | | | | | | | 0 | 60 | 80 | 120 | 160 | 200 | 220 | 240 |
| | | HP | kW | kW | | A | | H (m) | | | | | | | |
| **U 9-100/2** | **U 9-100/2T** | 1 | 0,75 | 0,98 | 0,92 | 4,4 | 1,7 | 23,0 | 20,9 | 20,0 | 17,9 | 15,0 | 11,1 | 8,9 | 6,5 |
| **U 9-150/3** | **U 9-150/3T** | 1,5 | 1,1 | 1,4 | 1,4 | 6,6 | 3,1 | 35,0 | 32,8 | 31,7 | 28,5 | 24,1 | 17,9 | 14,3 | |
| **U 9-200/4** | **U 9-200/4T** | 2 | 1,5 | 1,8 | 1,7 | 8,3 | 3,5 | 45,8 | 42,1 | 40,7 | 37,3 | 31,3 | 23,0 | 17,9 | |
| **U 9-250/5** | **U 9-250/5T** | 2,5 | 1,85 | 2,3 | 2,1 | 10,4 | 4,1 | 56,9 | 52,2 | 50,4 | 46,1 | 38,8 | 28,2 | 22,3 | |

| TYPE - 50 Hz | P2 | | P1 | CURRENT | Q (m³/h - l/min) | | | | | | | | | |
|---|---|---|---|---|---|---|---|---|---|---|---|---|---|---|
| 3~ | | | | 3~ 400V | 0 | 6 | 7,2 | 9,6 | 12 | 14,4 | 16,8 | 19,2 | 21,6 | 24 |
| | | | | | 0 | 100 | 120 | 160 | 200 | 240 | 280 | 320 | 360 | 400 |
| | HP | kW | kW | A | H (m) | | | | | | | | | |
| **U 18-180/2T** | 2 | 1,5 | 1,6 | 3,3 | 23,6 | 23,0 | 22,4 | 21,9 | 20,6 | 18,6 | 17,0 | 13,8 | 11,2 | 7,9 |
| **U 18-250/3T** | 2,5 | 1,85 | 2,2 | 4,2 | 34,7 | 32,9 | 32,6 | 31,6 | 30,1 | 28,0 | 24,7 | 20,6 | 15,9 | 10,7 |
| **U 18-400/4T** | 4 | 3 | 3,0 | 5,8 | 47,1 | 45,4 | 45,2 | 44,3 | 42,6 | 40,0 | 36,0 | 30,6 | 24,6 | 17,8 |

# ULTRA

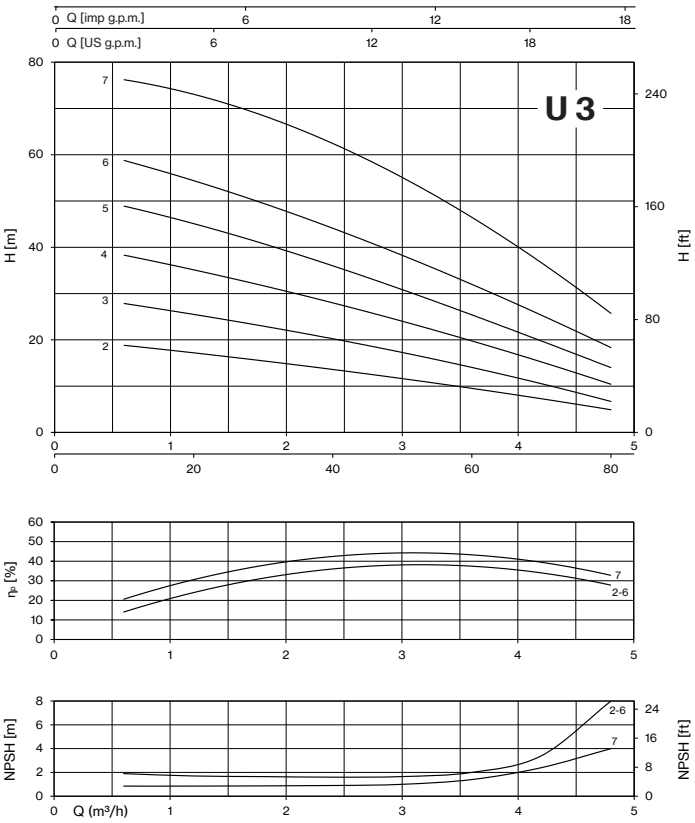
U 3
Q [imp g.p.m.]
Q [US g.p.m.]
H [m]
H [ft]
ηp [%]
NPSH [m]
NPSH [ft]
Q (m³/h)

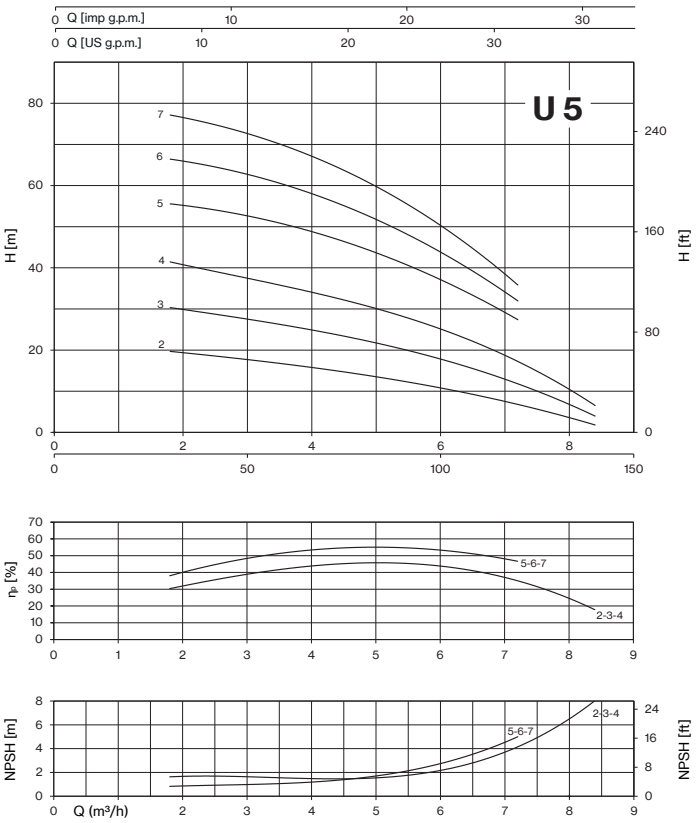
U 5
Q [imp g.p.m.]
Q [US g.p.m.]
H [m]
H [ft]
ηp [%]
NPSH [m]
NPSH [ft]
Q (m³/h)

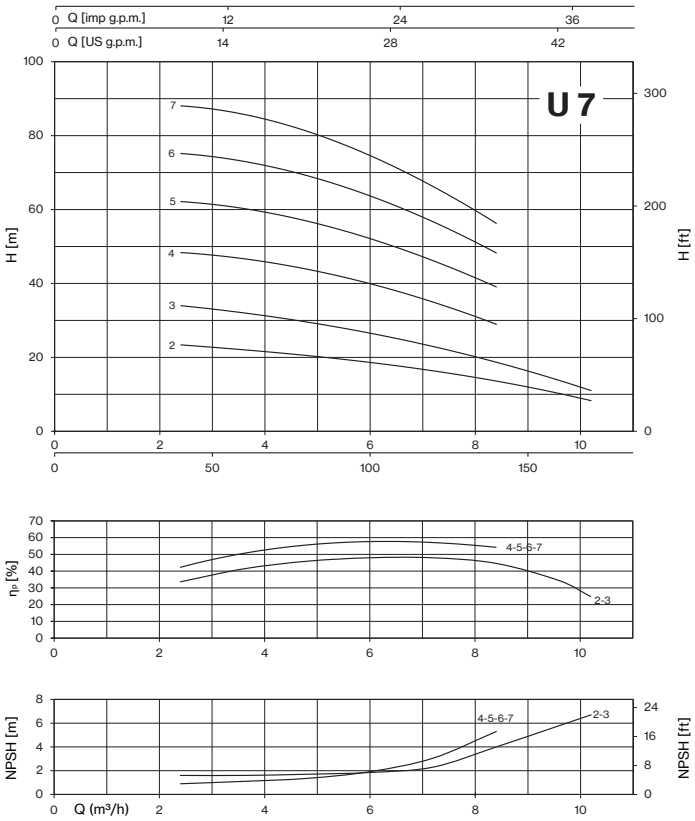
U 7
Q [imp g.p.m.]
Q [US g.p.m.]
H [m]
H [ft]
ηp [%]
NPSH [m]
NPSH [ft]
Q (m³/h)

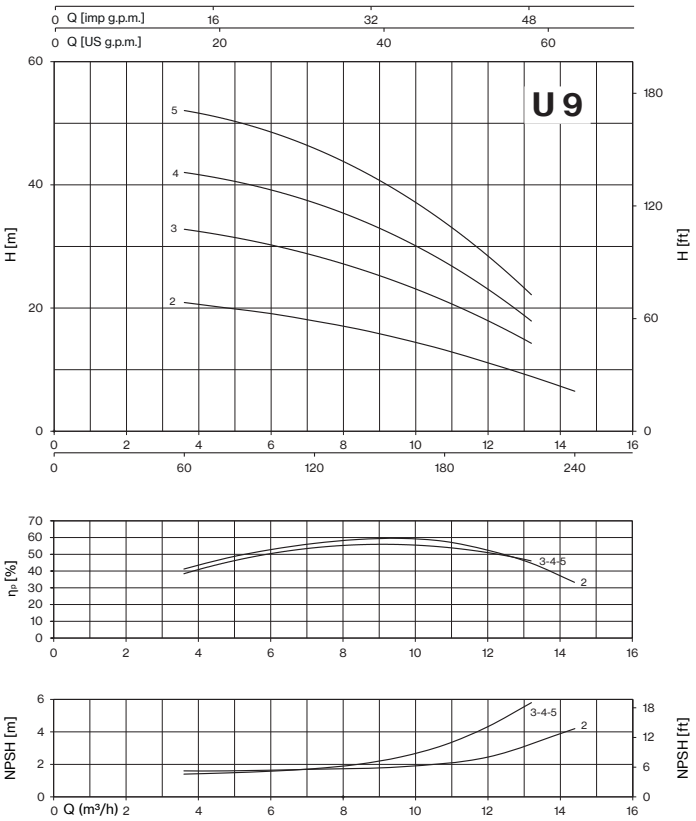
U 9
Q [imp g.p.m.]
Q [US g.p.m.]
H [m]
H [ft]
ηp [%]
NPSH [m]
NPSH [ft]
Q (m³/h)

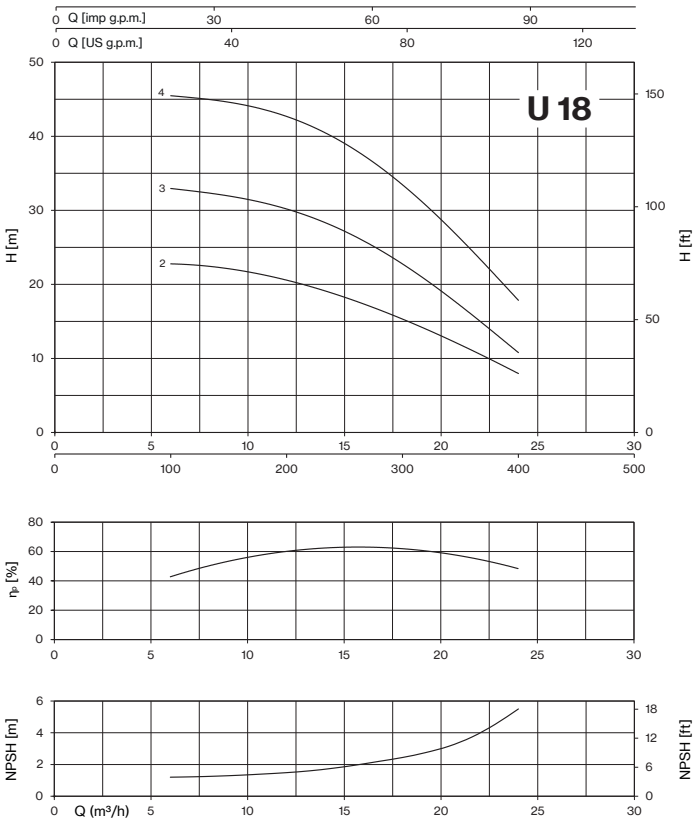


| LOTS | | | | |
|---|---|---|---|---|
| TYPE | TRUCK | | CONTAINER | |
| | PALLET (cm) | N° pumps | PALLET (cm) | N° pumps |
| **U 3-50/2(T)÷90/4(T)** | 80×120×150 | 84 | 80×120×175 | 96 |
| **U 3-100/5(T)÷120/6(T)** | 85×110×160 | 70 | 85×110×185 | 80 |
| **U 3-150/7(T)** | 90×110×150 | 48 | 90×110×170 | 56 |
| **U 5-70/2(T)** | 80×120×150 | 84 | 80×120×175 | 96 |
| **U 5-80/3(T)÷120/4(T)** | 85×110×160 | 70 | 85×110×185 | 80 |
| **U 5-150/5(T)** | 90×110×150 | 48 | 90×110×170 | 56 |
| **U 5-180/6(T)÷200/7(T)** | 80×120×150 | 42 | 80×120×175 | 49 |
| **U 7-100/2(T)÷120/3(T)** | 85×110×160 | 70 | 85×110×185 | 80 |
| **U 7-180/4(T)÷250/5(T)** | 90×110×150 | 48 | 90×110×170 | 56 |
| **U 7-300/6** | 80×120×150 | 42 | 80×120×175 | 49 |
| **U 7-300/6T** | 90×110×150 | 48 | 90×110×170 | 56 |
| **U 7-350/7T** | 80×120×155 | 30 | 80×120×180 | 35 |
| **U 9-100/2(T)** | 85×110×160 | 70 | 85×110×185 | 80 |
| **U 9-150/3÷200/4(T)** | 90×110×150 | 48 | 90×110×170 | 56 |
| **U 9-250/5(T)** | 90×110×150 | 48 | 90×110×170 | 56 |
| **U 18-180/2T÷250/3T** | 90×110×150 | 48 | 90×110×170 | 56 |
| **U 18-400/4T** | 80×120×150 | 42 | 80×120×175 | 49 |

# ULTRA

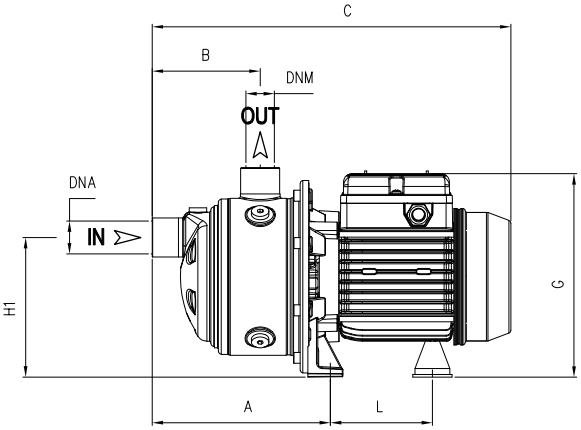


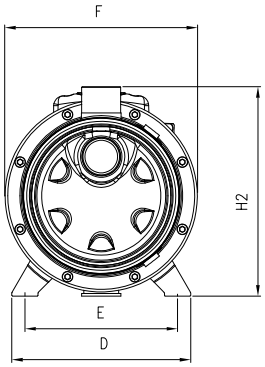


| TYPE | | DIMENSIONS (mm) | | | | | | | | | | | | | | | Kg | |
|---|---|---|---|---|---|---|---|---|---|---|---|---|---|---|---|---|---|---|
| ~1 | ~3 | A | B | C | D | E | F | G | L | H1 | H2 | DNA | DNM | I | L | M | ~1 | ~3 |
| **U 3-50/2** | **U 3-50/2T** | 166,8 | 103 | 333 | 164 | 140 | 176 | 190 | 93,7 | 128 | 192 | 1" G | 1" G | 369 | 189 | 220 | 6,5 | 6 |
| **U 3-70/3** | **U 3-70/3T** | 166,8 | 103 | 333 | 164 | 140 | 176 | 190 | 93,7 | 128 | 192 | | | 369 | 189 | 220 | 7 | 7 |
| **U 3-90/4** | **U 3-90/4T** | 190,8 | 127 | 357 | 164 | 140 | 176 | 190 | 93,7 | 128 | 192 | | | 369 | 189 | 220 | 8,5 | 8,5 |
| **U 3-100/5** | **U 3-100/5T** | 214,8 | 151 | 404 | 164 | 140 | 176 | 203 | 104,7 | 128 | 192 | | | 444 | 189 | 220 | 10,5 | 10,5 |
| **U 3-120/6** | **U 3-120/6T** | 238,8 | 175 | 428 | 164 | 140 | 176 | 203 | 104,7 | 128 | 192 | | | 444 | 189 | 220 | 11,5 | 11,5 |
| **U 3-150/7** | **U 3-150/7T** | 262,8 | 199 | 513 | 164 | 140 | 176 | 217 | 128,2 | 134 | 198 | | | 529 | 189 | 240 | 14,5 | 14 |
| **U 5-70/2** | **U 5-70/2T** | 166,8 | 103 | 333 | 164 | 140 | 176 | 195 | 93,7 | 128 | 192 | | | 369 | 189 | 220 | 7 | 7 |
| **U 5-80/3** | **U 5-80/3T** | 166,8 | 103 | 357 | 164 | 140 | 176 | 203 | 93,7 | 128 | 192 | | | 444 | 189 | 220 | 9,5 | 10,5 |
| **U 5-120/4** | **U 5-120/4T** | 190,8 | 127 | 380 | 164 | 140 | 176 | 203 | 104,7 | 128 | 192 | | | 444 | 189 | 220 | 11 | 11 |
| **U 5-150/5** | **U 5-150/5T** | 214,8 | 151 | 466 | 164 | 140 | 176 | 217 | 128,2 | 134 | 198 | | | 529 | 189 | 240 | 17,5 | 17,5 |
| **U 5-180/6** | **U 5-180/6T** | 238,8 | 175 | 489 | 164 | 140 | 176 | 217 | 128,2 | 134 | 198 | | | 529 | 189 | 240 | 17,5 | 18 |
| **U 5-200/7** | **U 5-200/7T** | 262,8 | 199 | 513 | 164 | 140 | 176 | 217 | 128,2 | 134 | 198 | | | 529 | 189 | 240 | 17 | 18 |

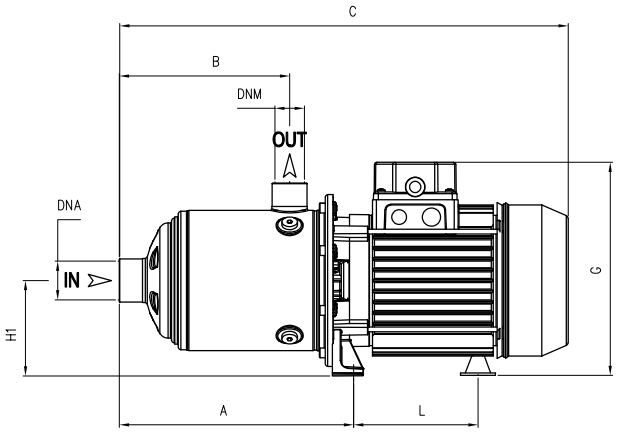


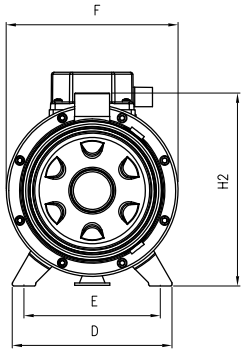


| TYPE | | DIMENSIONS (mm) | | | | | | | | | | | | | | | Kg | |
|---|---|---|---|---|---|---|---|---|---|---|---|---|---|---|---|---|---|---|
| ~1 | ~3 | A | B | C | D | E | F | G | L | H1 | H2 | DNA | DNM | I | L | M | ~1 | ~3 |
| **U 7-100/2** | **U 7-100/2T** | 166,8 | 103 | 356 | 164 | 140 | 178 | 203 | 104,7 | 92 | 192 | 1" ¼ G | 1" G | 444 | 189 | 220 | 10 | 10 |
| **U 7-120/3** | **U 7-120/3T** | 166,8 | 103 | 356 | 164 | 140 | 178 | 203 | 104,7 | 92 | 192 | | | 444 | 189 | 220 | 10,5 | 10,5 |
| **U 7-180/4** | **U 7-180/4T** | 190,8 | 127 | 441 | 164 | 140 | 176 | 217 | 128,2 | 98 | 198 | | | 529 | 189 | 240 | 16 | 17 |
| **U 7-250/5** | **U 7-250/5T** | 214,8 | 151 | 466 | 164 | 140 | 176 | 217 | 128,2 | 98 | 198 | | | 529 | 189 | 240 | 17,5 | 16,5 |
| **U 7-300/6** | **U 7-300/6T** | 238,8 | 175 | 543<br>T 489 | 164 | 140 | 176 | 229<br>T 211 | 148,2<br>T 128,2 | 103<br>T 98 | 203<br>T 198 | | | 580<br>529 | 231<br>189 | 235<br>240 | 24,5 | 18 |
| **-** | **U 7-350/7T** | 262,8 | 199 | 567 | 164 | 140 | 176 | 229 | 148,2 | 103 | 203 | | | 580 | 231 | 235 | - | 22 |
| **U 9-100/2** | **U 9-100/2T** | 185,8 | 118 | 375 | 164 | 140 | 178 | 203 | 104,7 | 98 | 192 | 1" ½ G | 1" ¼ G | 444 | 189 | 220 | 10 | 10 |
| **U 9-150/3** | **U 9-150/3T** | 185,8 | 118 | 405 | 164 | 140 | 176 | 217 | 128,2 | 98 | 198 | | | 529 | 189 | 240 | 17 | 17 |
| **U 9-200/4** | **U 9-200/4T** | 215,8 | 148 | 466 | 164 | 140 | 176 | 217 | 128,2 | 98 | 198 | | | 529 | 189 | 240 | 16 | 17,5 |
| **U 9-250/5** | **U 9-250/5T** | 245,8 | 178 | 494 | 164 | 140 | 176 | 217 | 128,2 | 98 | 198 | | | 529 | 189 | 240 | 17,5 | 16,5 |
| **-** | **U 18-180/2T** | 201 | 141 | 462 | 164 | 140 | 176 | 217 | 128,2 | 98 | 198 | 2" G | 1" ½ G | 529 | 189 | 240 | - | 14 |
| **-** | **U 18-250/3T** | 238,5 | 141 | 462 | 164 | 140 | 176 | 217 | 128,2 | 98 | 198 | | | 529 | 189 | 240 | - | 16 |
| **-** | **U 18-400/4T** | 276 | 178,5 | 554 | 164 | 140 | 176 | 229 | 148,2 | 103 | 203 | | | 580 | 231 | 235 | - | 24 |

# ULTRA S

## Multistage Horizontal

Stainless steel multistage horizontal pumps. Pumping of clean non-loaded fluids, pressurizing system, irrigation, drinking and glycol water, water treatment, heating and air conditioning, washing system.

| Construction features | |
|---|---|
| **Pump body, mechanical seal housing** | stainless steel AISI 304 |
| **Motor bracket** | aluminum |
| **Impellers, diffusers** | stainless steel AISI 304 |
| **Mechanical seal** | ceramic-graphite-EPDM ≤ 6 impellers<br>graphite-silicon carbide-EPDM ≥ 7 impellers |
| **Motor shaft** | stainless steel AISI 303 |
| **Liquid temperature** | -15 ÷ +110 °C |
| **Operating pressure** | max 8,5 bar |

| Motor | |
|---|---|
| **2 poles induction motor** | 3~ 230/400V - 50Hz<br>1~ 230V - 50Hz<br>(with thermal protection up to 1,85 kW) |
| **Insulation class** | F |
| **Protection degree** | IPX4 |

**U 3 S - 120 / 6 T -WR**

- pump type
- nominal flow-rate m³/h
- stainless steel hydraulic part
- No. of impellers
- motor: 1~ / T 3~
- certification: standard / -WR WRAS approved
- mech. seal: standard / -2 Sic-Sic

ULTRA 3S

ULTRA 5S

ULTRA 7S

ULTRA 9S

ULTRA 18S

WRAS APPROVED PRODUCT
CERTIFICATION MARK

# ULTRA S

| TYPE - 50 Hz | | P2 | | P1 | | CURRENT | | Q (m³/h - l/min) | | | | | | |
|---|---|---|---|---|---|---|---|---|---|---|---|---|---|---|
| 1~ | 3~ | | | 1~ | 3~ | 1~ 230V | 3~ 400V | 0 | 0,6 | 1,2 | 1,8 | 2,4 | 3,6 | 4,8 |
| | | | | | | | | 0 | 10 | 20 | 30 | 40 | 60 | 80 |
| | | HP | kW | kW | | A | | H (m) | | | | | | |
| **U 3S-50/2** | **U 3S-50/2T** | 0,5 | 0,37 | 0,41 | 0,41 | 1,8 | 0,9 | 21,7 | 20,9 | 19,3 | 17,8 | 15,9 | 11,4 | 5,8 |
| **U 3S-70/3** | **U 3S-70/3T** | 0,7 | 0,51 | 0,61 | 0,58 | 2,7 | 1,1 | 32,7 | 31,2 | 29,2 | 26,7 | 23,9 | 17,2 | 9,0 |
| **U 3S-90/4** | **U 3S-90/4T** | 0,9 | 0,66 | 0,83 | 0,8 | 3,6 | 1,7 | 44,3 | 42,8 | 40,0 | 36,4 | 33,2 | 24,5 | 13,9 |
| **U 3S-100/5** | **U 3S-100/5T** | 1 | 0,75 | 0,99 | 0,92 | 4,4 | 1,7 | 55,3 | 53,5 | 50,3 | 46,5 | 42,1 | 31,6 | 17,7 |
| **U 3S-120/6** | **U 3S-120/6T** | 1,2 | 0,9 | 1,11 | 1,11 | 5,1 | 2,5 | 66,6 | 64,4 | 60,8 | 56,0 | 50,7 | 38,1 | 22,4 |
| **U 3S-150/7** | **U 3S-150/7T** | 1,5 | 1,1 | 1,4 | 1,4 | 6,6 | 3,1 | 75,6 | 73,3 | 69,4 | 64,8 | 58,9 | 44,4 | 26,1 |

| TYPE - 50 Hz | | P2 | | P1 | | CURRENT | | Q (m³/h - l/min) | | | | | | | |
|---|---|---|---|---|---|---|---|---|---|---|---|---|---|---|---|
| 1~ | 3~ | | | 1~ | 3~ | 1~ 230V | 3~ 400V | 0 | 1,8 | 2,4 | 3,6 | 4,8 | 6 | 7,2 | 8,4 |
| | | | | | | | | 0 | 30 | 40 | 60 | 80 | 100 | 120 | 140 |
| | | HP | kW | kW | | A | | H (m) | | | | | | | |
| **U 5S-70/2** | **U 5S-70/2T** | 0,7 | 0,51 | 0,6 | 0,58 | 2,6 | 1,1 | 22,3 | 20,4 | 19,5 | 17,5 | 14,8 | 11,7 | 7,8 | 2,8 |
| **U 5S-80/3** | **U 5S-80/3T** | 0,8 | 0,6 | 0,8 | 0,75 | 3,8 | 1,4 | 34,0 | 31,1 | 29,9 | 27,0 | 23,6 | 19,1 | 13,1 | 6,0 |
| **U 5S-120/4** | **U 5S-120/4T** | 1,2 | 0,9 | 1,09 | 1,08 | 4,9 | 2,4 | 45,5 | 42,2 | 40,7 | 37,2 | 32,9 | 27,4 | 19,8 | 10,4 |
| **U 5S-150/5** | **U 5S-150/5T** | 1,5 | 1,1 | 1,4 | 1,3 | 6,6 | 3,1 | 55,9 | 52,8 | 51,4 | 48,1 | 43,4 | 37,3 | 28,3 | 16,4 |
| **U 5S-180/6** | **U 5S-180/6T** | 2 | 1,5 | 1,6 | 1,6 | 7,4 | 3,3 | 67,0 | 63,3 | 61,6 | 57,6 | 51,9 | 44,2 | 33,6 | 20,4 |
| **U 5S-200/7** | **U 5S-200/7T** | 2 | 1,5 | 1,9 | 1,8 | 8,6 | 3,6 | 77,8 | 73,5 | 71,3 | 66,3 | 59,6 | 50,7 | 38,0 | 22,4 |

| TYPE - 50 Hz | | P2 | | P1 | | CURRENT | | Q (m³/h - l/min) | | | | | | | |
|---|---|---|---|---|---|---|---|---|---|---|---|---|---|---|---|
| 1~ | 3~ | | | 1~ | 3~ | 1~ 230V | 3~ 400V | 0 | 2,4 | 3,6 | 4,8 | 6 | 7,2 | 9,6 | 10,8 |
| | | | | | | | | 0 | 40 | 60 | 80 | 100 | 120 | 160 | 180 |
| | | HP | kW | kW | | A | | H (m) | | | | | | | |
| **U 7S-100/2** | **U 7S100/2T** | 1 | 0,75 | 0,91 | 0,84 | 4,1 | 1,6 | 23,6 | 22,6 | 21,8 | 20,5 | 18,8 | 16,7 | 10,6 | 6,7 |
| **U 7S-120/3** | **U 7S-120/3T** | 1,2 | 0,9 | 1,23 | 1,22 | 5,6 | 2,5 | 35,6 | 33,9 | 32,8 | 31,2 | 28,1 | 24,7 | 15,7 | 10,0 |
| **U 7S-180/4** | **U 7S-180/4T** | 2 | 1,5 | 1,8 | 1,7 | 8,3 | 3,5 | 46,7 | 46,0 | 45,2 | 43,1 | 40,3 | 36,9 | 25,5 | |
| **U 7S-250/5** | **U 7S-250/5T** | 2,5 | 1,85 | 2,2 | 2,1 | 9,9 | 4,0 | 58,5 | 57,6 | 56,6 | 54,1 | 50,8 | 46,1 | 31,8 | |
| **U 7S-300/6** | **U 7S-300/6T** | 3 | 2,2 | 2,6 | 2,5 | 12,1 | 4,8 | 70,6 | 69,9 | 68,7 | 65,8 | 61,8 | 56,6 | 39,3 | |
| **-** | **U 7S-350/7T** | 3,5 | 2,57 | - | 2,9 | - | 5,3 | 82,8 | 82,0 | 80,6 | 77,2 | 72,3 | 66,0 | 46,4 | |

| TYPE - 50 Hz | | P2 | | P1 | | CURRENT | | Q (m³/h - l/min) | | | | | | | | |
|---|---|---|---|---|---|---|---|---|---|---|---|---|---|---|---|---|
| 1~ | 3~ | | | 1~ | 3~ | 1~ 230V | 3~ 400V | 0 | 3,6 | 4,8 | 6 | 7,2 | 9,6 | 12 | 13,2 | 14,4 |
| | | | | | | | | 0 | 60 | 80 | 100 | 120 | 160 | 200 | 220 | 240 |
| | | HP | kW | kW | | A | | H (m) | | | | | | | | |
| **U 9S-100/2** | **U 9S-100/2T** | 1 | 0,75 | 0,99 | 0,95 | 4,5 | 1,6 | 23,9 | 21,0 | 20,0 | 18,8 | 17,7 | 15,0 | 11,0 | 8,7 | 6,0 |
| **U 9S-150/3** | **U 9S-150/3T** | 1,5 | 1,1 | 1,5 | 1,4 | 7,0 | 3,1 | 35,1 | 32,8 | 31,8 | 30,6 | 29,0 | 24,9 | 18,9 | 15,2 | |
| **U 9S-200/4** | **U 9S-200/4T** | 2 | 1,5 | 1,8 | 1,8 | 8,3 | 3,6 | 45,8 | 42,7 | 41,5 | 39,7 | 37,8 | 32,7 | 24,6 | 19,8 | |
| **U 9S-250/5** | **U 9S-250/5T** | 2,5 | 1,85 | 2,3 | 2,2 | 10,4 | 4,2 | 57,1 | 53,1 | 51,6 | 49,5 | 47,2 | 40,6 | 30,2 | 24,4 | |

| TYPE - 50 Hz | P2 | | P1 | CURRENT | Q (m³/h - l/min) | | | | | | | | | |
|---|---|---|---|---|---|---|---|---|---|---|---|---|---|---|
| 3~ | | | | 3~ 400V | 0 | 6 | 7,2 | 9,6 | 12 | 14,4 | 16,8 | 19,2 | 21,6 | 24 |
| | | | | | 0 | 100 | 120 | 160 | 200 | 240 | 280 | 320 | 360 | 400 |
| | HP | kW | kW | A | H (m) | | | | | | | | | |
| **U 18S-180/2T** | 2 | 1,5 | 1,6 | 3,3 | 23,8 | 22,3 | 21,8 | 20,6 | 19,1 | 17,5 | 15,7 | 13,5 | 10,9 | 7,8 |
| **U 18S-250/3T** | 2,5 | 1,85 | 2,3 | 4,3 | 33,8 | 31,6 | 31,0 | 29,4 | 27,4 | 25,4 | 23,2 | 20,4 | 16,3 | 11,5 |
| **U 18S-400/4T** | 4 | 3 | 3,1 | 5,9 | 46,3 | 44,2 | 43,4 | 41,4 | 39,1 | 36,7 | 34,1 | 30,8 | 25,6 | 19,0 |

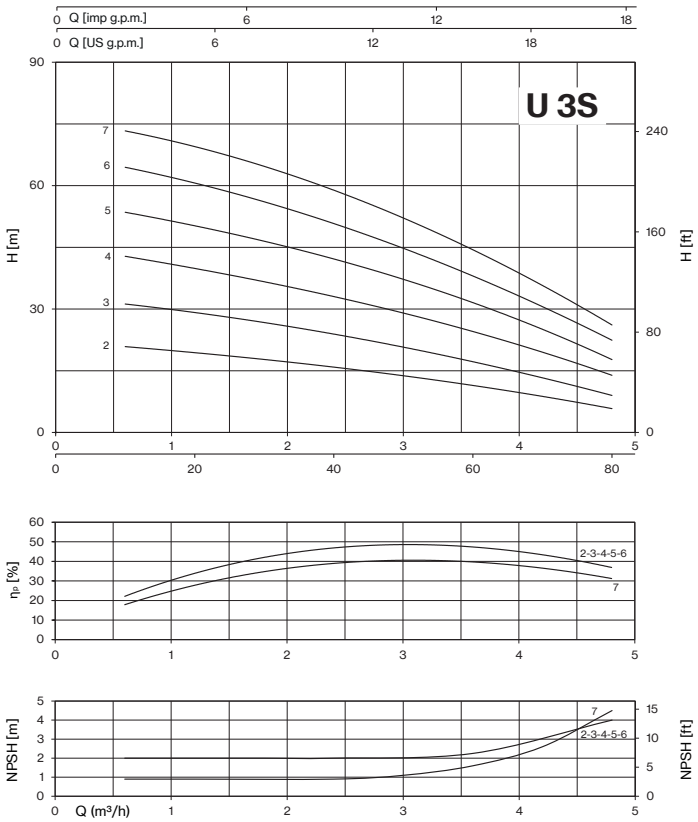
U 3S
Q [imp g.p.m.]
Q [US g.p.m.]
H [m]
H [ft]
ηp [%]
NPSH [m]
NPSH [ft]
Q (m³/h)
2-3-4-5-6
7

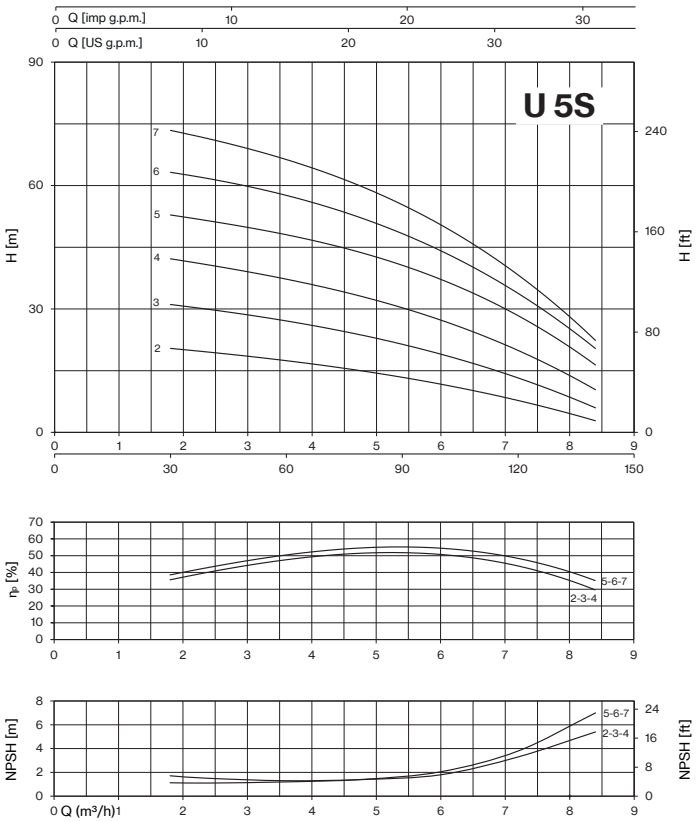
U 5S
Q [imp g.p.m.]
Q [US g.p.m.]
H [m]
H [ft]
ηp [%]
NPSH [m]
NPSH [ft]
Q (m³/h)
5-6-7
2-3-4

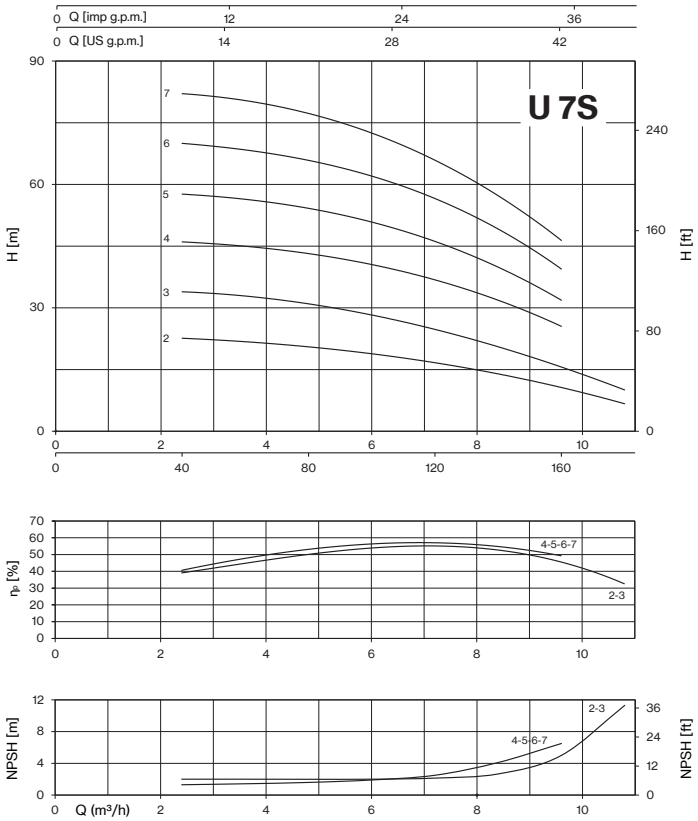
U 7S
Q [imp g.p.m.]
Q [US g.p.m.]
H [m]
H [ft]
ηp [%]
NPSH [m]
NPSH [ft]
Q (m³/h)
4-5-6-7
2-3

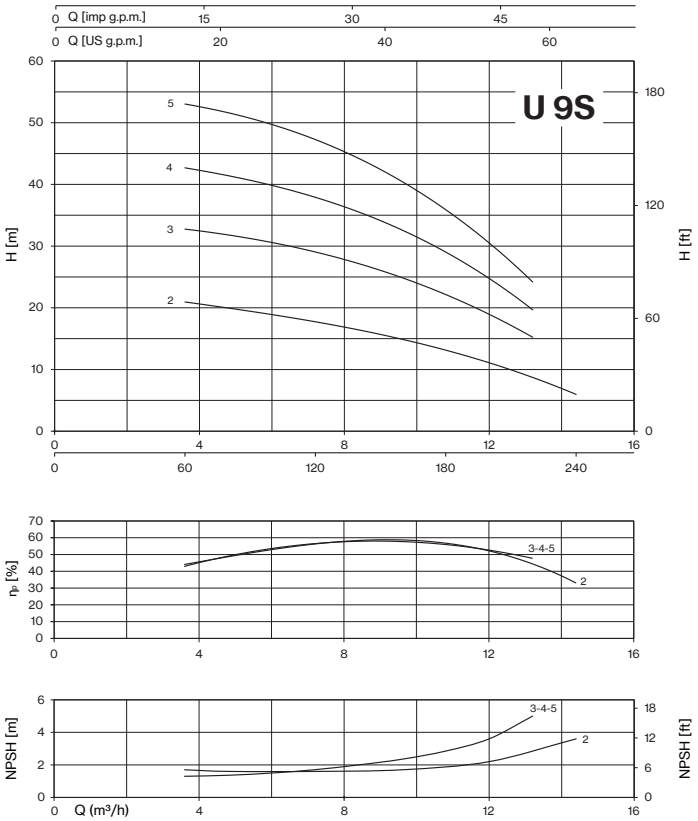
U 9S
Q [imp g.p.m.]
Q [US g.p.m.]
H [m]
H [ft]
ηp [%]
NPSH [m]
NPSH [ft]
Q (m³/h)
3-4-5
2

# ULTRA S

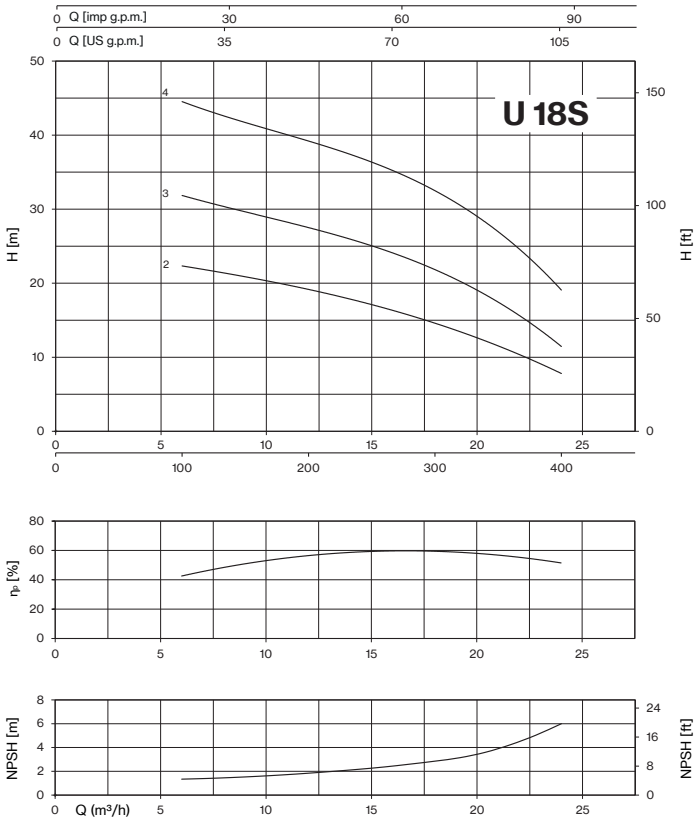


| LOTS | | | | |
|---|---|---|---|---|
| TYPE | TRUCK | | CONTAINER | |
| | PALLET (cm) | N° pumps | PALLET (cm) | N° pumps |
| **U 3S-50(T)/2÷90/4(T)** | 80×120×150 | 84 | 80×120×175 | 96 |
| **U 3S-100/5(T)÷120/6(T)** | 85×110×160 | 70 | 85×110×185 | 80 |
| **U 3S-150/7(T)** | 90×110×150 | 48 | 90×110×170 | 56 |
| **U 5S-70/2(T)** | 80×120×150 | 84 | 80×120×175 | 96 |
| **U 5S-80/3(T)÷120/4(T)** | 85×110×160 | 70 | 85×110×185 | 80 |
| **U 5S-150/5(T)** | 90×110×150 | 48 | 90×110×170 | 56 |
| **U 5S-180/6(T)÷200/7(T)** | 80×120×150 | 42 | 80×120×175 | 49 |
| **U 7S-100/2(T)÷120/3(T)** | 85×110×160 | 70 | 85×110×185 | 80 |
| **U 7S-180/4(T)÷250/5(T)** | 90×110×150 | 48 | 90×110×170 | 56 |
| **U 7S-300/6** | 80×120×150 | 42 | 80×120×175 | 49 |
| **U 7S-300/6T** | 90×110×150 | 48 | 90×110×170 | 56 |
| **U 7S-350/7T** | 80×120×155 | 30 | 80×120×180 | 35 |
| **U 9S-100/2(T)** | 85×110×160 | 70 | 85×110×185 | 80 |
| **U 9S-150/3(T)÷200/4(T)** | 90×110×150 | 48 | 90×110×170 | 56 |
| **U 9S-250/5(T)** | 90×110×150 | 48 | 90×110×170 | 56 |
| **U 18S-180/2T÷250/3T** | 90×110×150 | 48 | 90×110×170 | 56 |
| **U 18S-400/4T** | 80×120×145 | 42 | 80×120×175 | 49 |

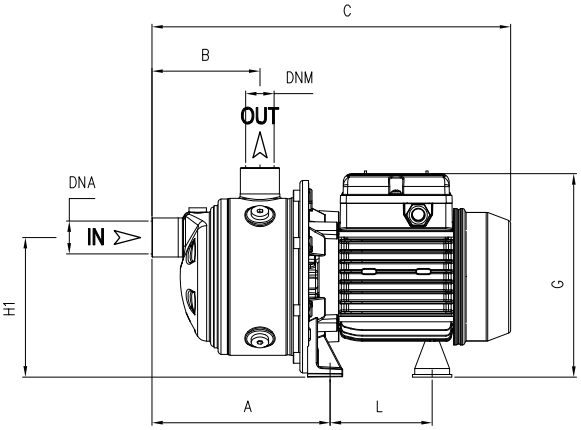


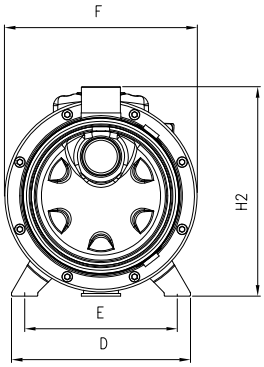


| TYPE | | DIMENSIONS (mm) | | | | | | | | | | | | | | | Kg | |
|---|---|---|---|---|---|---|---|---|---|---|---|---|---|---|---|---|---|---|
| ~1 | ~3 | A | B | C | D | E | F | G | L | H1 | H2 | DNA | DNM | I | L | M | ~1 | ~3 |
| **U 3S-50/2** | **U 3S-50/2T** | 166,8 | 103 | 333 | 164 | 140 | 176 | 190 | 93,7 | 128 | 192 | 1” G | 1” G | 369 | 189 | 220 | 6,5 | 6 |
| **U 3S-70/3** | **U 3S-70/3T** | 166,8 | 103 | 333 | 164 | 140 | 176 | 190 | 93,7 | 128 | 192 | | | 369 | 189 | 220 | 7 | 7 |
| **U 3S-90/4** | **U 3S-90/4T** | 190,8 | 127 | 357 | 164 | 140 | 176 | 190 | 93,7 | 128 | 192 | | | 369 | 189 | 220 | 8,5 | 8,5 |
| **U 3S-100/5** | **U 3S-100/5T** | 214,8 | 151 | 404 | 164 | 140 | 176 | 203 | 104,7 | 128 | 192 | | | 444 | 189 | 220 | 10,5 | 10,5 |
| **U 3S-120/6** | **U 3S-120/6T** | 238,8 | 175 | 428 | 164 | 140 | 176 | 203 | 104,7 | 128 | 192 | | | 444 | 189 | 220 | 11,5 | 11,5 |
| **U 3S-150/7** | **U 3S-150/7T** | 262,8 | 199 | 513 | 164 | 140 | 176 | 211 | 128,2 | 134 | 198 | | | 529 | 189 | 240 | 14,5 | 14 |
| **U 5S-70/2** | **U 5S-70/2T** | 166,8 | 103 | 333 | 164 | 140 | 176 | 195 | 93,7 | 128 | 192 | | | 369 | 189 | 220 | 7 | 7 |
| **U 5S-80/3** | **U 5S-80/3T** | 166,8 | 103 | 357 | 164 | 140 | 176 | 203 | 93,7 | 128 | 192 | | | 444 | 189 | 220 | 9,5 | 10,5 |
| **U 5S-120/4** | **U 5S-120/4T** | 190,8 | 127 | 380 | 164 | 140 | 176 | 203 | 104,7 | 128 | 192 | | | 444 | 189 | 220 | 11 | 11 |
| **U 5S-150/5** | **U 5S-150/5T** | 214,8 | 151 | 466 | 164 | 140 | 176 | 211 | 128,2 | 134 | 198 | | | 529 | 189 | 240 | 17,5 | 17,5 |
| **U 5S-180/6** | **U 5S-180/6T** | 238,8 | 175 | 489 | 164 | 140 | 176 | 211 | 128,2 | 134 | 198 | | | 529 | 189 | 240 | 17,5 | 18 |
| **U 5S-200/7** | **U 5S-200/7T** | 262,8 | 199 | 513 | 164 | 140 | 176 | 211 | 128,2 | 134 | 198 | | | 529 | 189 | 240 | 17 | 18 |

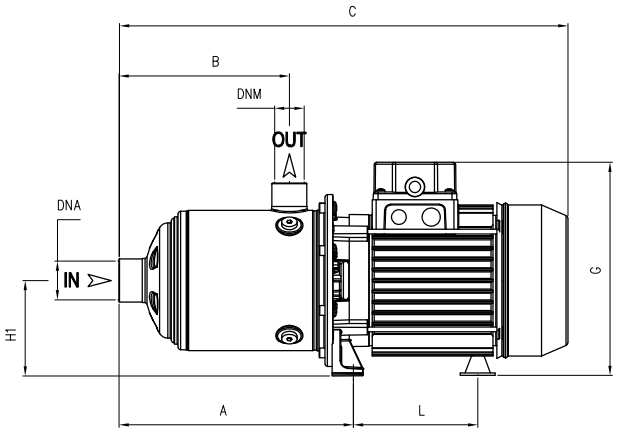


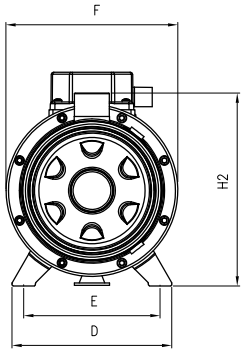


| TYPE | | DIMENSIONS (mm) | | | | | | | | | | | | | | | Kg | |
|---|---|---|---|---|---|---|---|---|---|---|---|---|---|---|---|---|---|---|
| ~1 | ~3 | A | B | C | D | E | F | G | L | H1 | H2 | DNA | DNM | I | L | M | ~1 | ~3 |
| **U 7S-100/2** | **U 7S100/2T** | 166,8 | 103 | 356 | 164 | 140 | 176 | 203 | 104,7 | 92 | 192 | 1” ¼ G | 1” G | 444 | 189 | 220 | 10,5 | 10,5 |
| **U 7S-120/3** | **U 7S-120/3T** | 166,8 | 103 | 356 | 164 | 140 | 176 | 203 | 104,7 | 92 | 192 | | | 444 | 189 | 220 | 11,5 | 11,5 |
| **U 7S-180/4** | **U 7S-180/4T** | 190,8 | 127 | 441 | 164 | 140 | 176 | 211 | 128,2 | 98 | 198 | | | 529 | 189 | 240 | 17 | 18 |
| **U 7S-250/5** | **U 7S-250/5T** | 214,8 | 151 | 466 | 164 | 140 | 176 | 211 | 128,2 | 98 | 198 | | | 529 | 189 | 240 | 18,5 | 17,5 |
| **U 7S-300/6** | **U 7S-300/6T** | 238,8 | 175 | 543<br>T 489 | 164 | 140 | 176 | 229<br>T 211 | 148,2<br>T 128,2 | 103<br>T 98 | 203<br>T 198 | | | 580<br>529 | 231<br>189 | 235<br>240 | 26 | 19,5 |
| **-** | **U 7S-350/7T** | 262,8 | 199 | 567 | 164 | 140 | 176 | 229 | 148,2 | 103 | 203 | | | 580 | 231 | 235 | - | 23,5 |
| **U 9S-100/2** | **U 9S-100/2T** | 185,8 | 118 | 375 | 164 | 140 | 176 | 203 | 104,7 | 98 | 192 | 1” ½ G | 1” ¼ G | 444 | 189 | 220 | 10,5 | 10,5 |
| **U 9S-150/3** | **U 9S-150/3T** | 185,8 | 118 | 405 | 164 | 140 | 176 | 211 | 128,2 | 98 | 198 | | | 529 | 189 | 240 | 18 | 18 |
| **U 9S-200/4** | **U 9S-200/4T** | 215,8 | 148 | 466 | 164 | 140 | 176 | 211 | 128,2 | 98 | 198 | | | 529 | 189 | 240 | 17,5 | 18,5 |
| **U 9S-250/5** | **U 9S-250/5T** | 245,8 | 178 | 494 | 164 | 140 | 176 | 211 | 128,2 | 98 | 198 | | | 529 | 189 | 240 | 19 | 18 |
| **-** | **U 18S-180/2T** | 201 | 141 | 462 | 164 | 140 | 176 | 211 | 128,2 | 98 | 198 | 2” G | 1” ½ G | 529 | 189 | 240 | - | 15 |
| **-** | **U 18S-250/3T** | 238,5 | 141 | 462 | 164 | 140 | 176 | 211 | 128,2 | 98 | 198 | | | 529 | 189 | 240 | - | 17,5 |
| **-** | **U 18S-400/4T** | 276 | 178,5 | 554 | 164 | 140 | 176 | 229 | 148,2 | 103 | 203 | | | 580 | 231 | 235 | - | 26 |

# ULTRA (S) Serie-Mechanical seal and bearings

| MECHANICAL SEAL | PUMP MODEL | SHAFT ⌀ | | STANDARD MATERIAL | OPTIONAL |
|---|---|---|---|---|---|
| | | | | | 2 |
| | U3-50/2, U3-70/3, U3-90/4, U3-100/5, U3-120/6, U5-70/2, U5-80/3, U5-120/4, U5-150/5, U5-180/6, U7-100/2, U7-120/3, U7-180/4, U7-250/5, U7-300/6, U9-100/2, U9-150/3, U9-200/4, U9-250/5, U18-180/2, U18-250/3, U18-400/4 | 14mm / S | ***Rotating face***<br>***Stationary face***<br>***Elastomer*** | Graphite<br>Ceramic<br>EPDM | SiC<br>SiC<br>EPDM |
| | U3-150/7, U5-200/7, U7-350/7 | 14mm | ***Rotating face***<br>***Stationary face***<br>***Elastomer*** | Graphite<br>SiC<br>EPDM | SiC<br>SiC<br>EPDM |

| BEARINGS | PUMP MODEL | TYPE | |
|---|---|---|---|
| | U3-50/2, U3-70/3, U3-90/4, U5-70/2 | 6201-ZZ | 6202-ZZ |
| | U3-100/5, U3-120/6, U5-80/3, U5-120/4, U7-100/2, U7-120/3, U9-100/2 | 6202-ZZ | 6302-ZZ C3 |
| | U3-150/7, U5-150/5, U5-180/6, U5-200/7, U7-180/4, U7-250/5, 3~ U7-300/6, U9-150/3, U9-200/4, U9-250/5, U18-180/2, U18-250/3 | 6203-ZZ | 6304-ZZ C3 |
| | 1~ U7-300/6, U7-350/7, U18-400/4 | 6203-ZZ | 6305-ZZ C3 |

# ULTRA + VSD

**Horizontal booster pump with variable speed drive**

## DESCRIPTION

Horizontal pump of ULTRA series provided with single-phase variable speed drive EPIC or three-phase EPIC-A.
This booster pump assures a desired pressure regardless of changes on flow demand making it suitable for low or missing pressure in domestic systems. A membrane tank downstream the system is required.

## FEATURES

- EPIC or EPIC-A variable speed drive provided on board
- Three-phase horizontal pump of ULTRA series
- Pressure sensor
- Cable with plug

## FUNCTIONING

If the pressure in the network drops the pump will starts and gradually speeds up to provide with the set pressure. When the water demand decreases, the pressure will rise causing the pump speed to slow down and eventually to stop the pump if demand ceases. The pump will remain on standby waiting to start at the next water demand.

## SELECTION

The table below shows the horizontal ULTRA pump models available for the assembly with EPIC or EPIC-A.
Consult the catalog at the ULTRA series for pump specifics and characteristic curves.

| 3~ PUMP TYPE | | VSD TYPE | |
|---|---|---|---|
| | | Power supply | |
| ULTRA | ULTRA S | 1~ 230V | 3~ 400V |
| U 3-50/2T | U 3S-50/2T | EPIC | EPIC-A 304 |
| U 3-70/3T | U 3S-70/3T | | |
| U 3-90/4T | U 3S-90/4T | | |
| U 3-100/5T | U 3S-100/5T | | |
| U 3-120/6T | U 3S-120/6T | | |
| U 3-150/7T | U 3S-150/7T | | |
| U 5-70/2T | U 5S-70/2T | | |
| U 5-80/3T | U 5S-80/3T | | |
| U 5-120/4T | U 5S-120/4T | | |
| U 5-150/5T | U 5S-150/5T | | |
| U 5-180/6T | U 5S-180/6T | | |
| U 5-200/7T | U 5S-200/7T | | |
| U 7-100/2T | U 7S-100/2T | | |
| U 7-120/3T | U 7S-120/3T | | |
| U 7-180/4T | U 7S-180/4T | | |
| U 7-250/5T | U 7S-250/5T | | EPIC-A 306 |
| U 7-300/6T | U 7S-300/6T | - | |
| U 7-350/7T | U 7S-350/7T | | |
| U 9-100/2T | U 9S-100/2T | EPIC | EPIC-A 304 |
| U 9-150/3T | U 9S-150/3T | | |
| U 9-200/4T | U 9S-200/4T | | |
| U 9-250/5T | U 9S-250/5T | - | EPIC-A 306 |
| U 18-180/2T | U 18-180/2T | EPIC | EPIC-A 304 |
| U 18-250/3T | U 18S-250/3T | - | EPIC-A 306 |
| U 18-400/4T | U 18S-400/4T | | EPIC-A 309 |

**U3S /E 100/5 T 1×230-50**

- power supply
- VSD model (only for EPIC-A)
- VSD type **/E** EPIC
  **/A** EPIC-A

Pentax®

WATER PUMPS

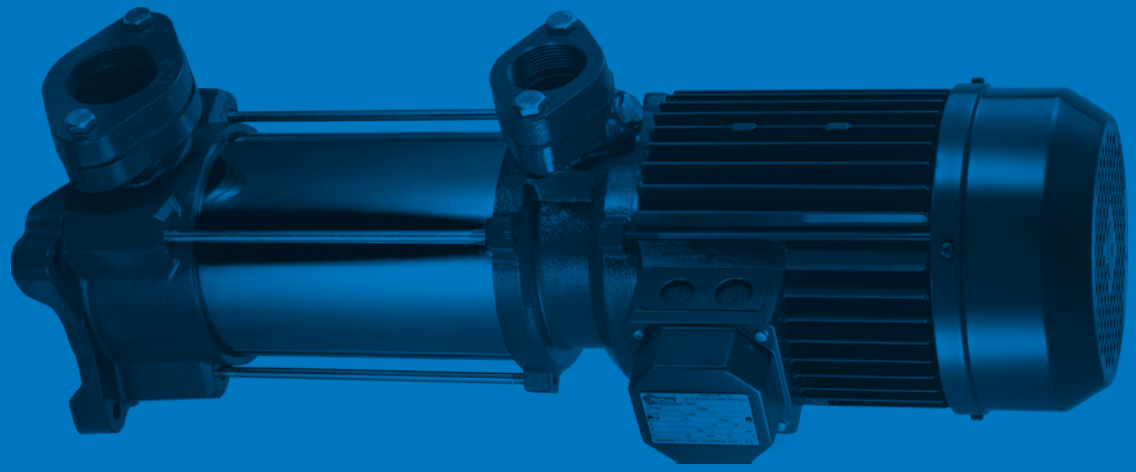

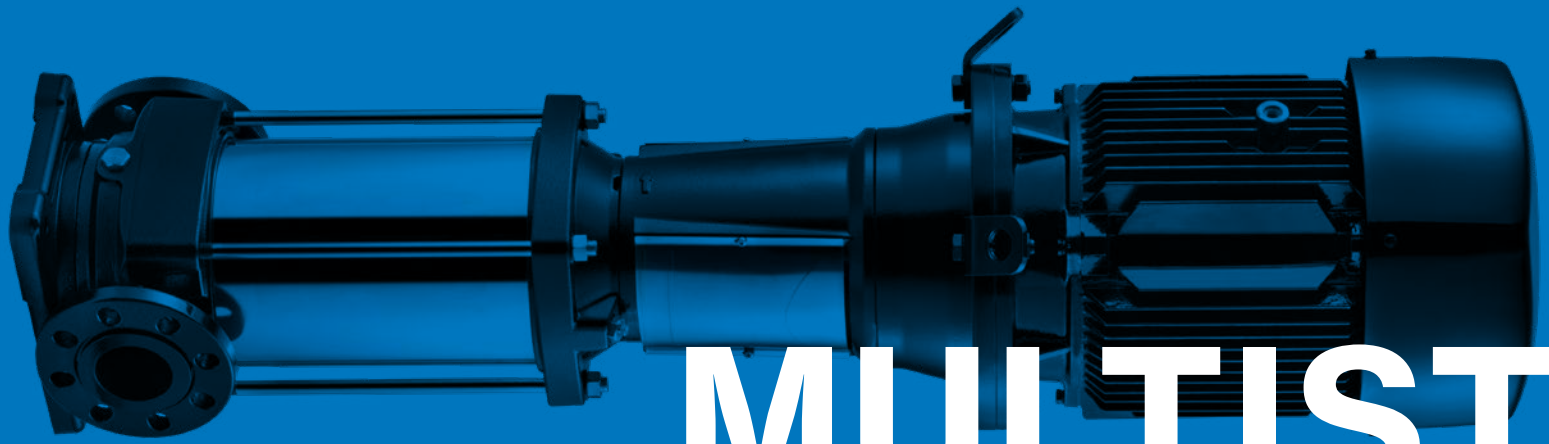

# MULTISTAGE VERTICAL

# MULTISTAGE VERTICAL PUMPS

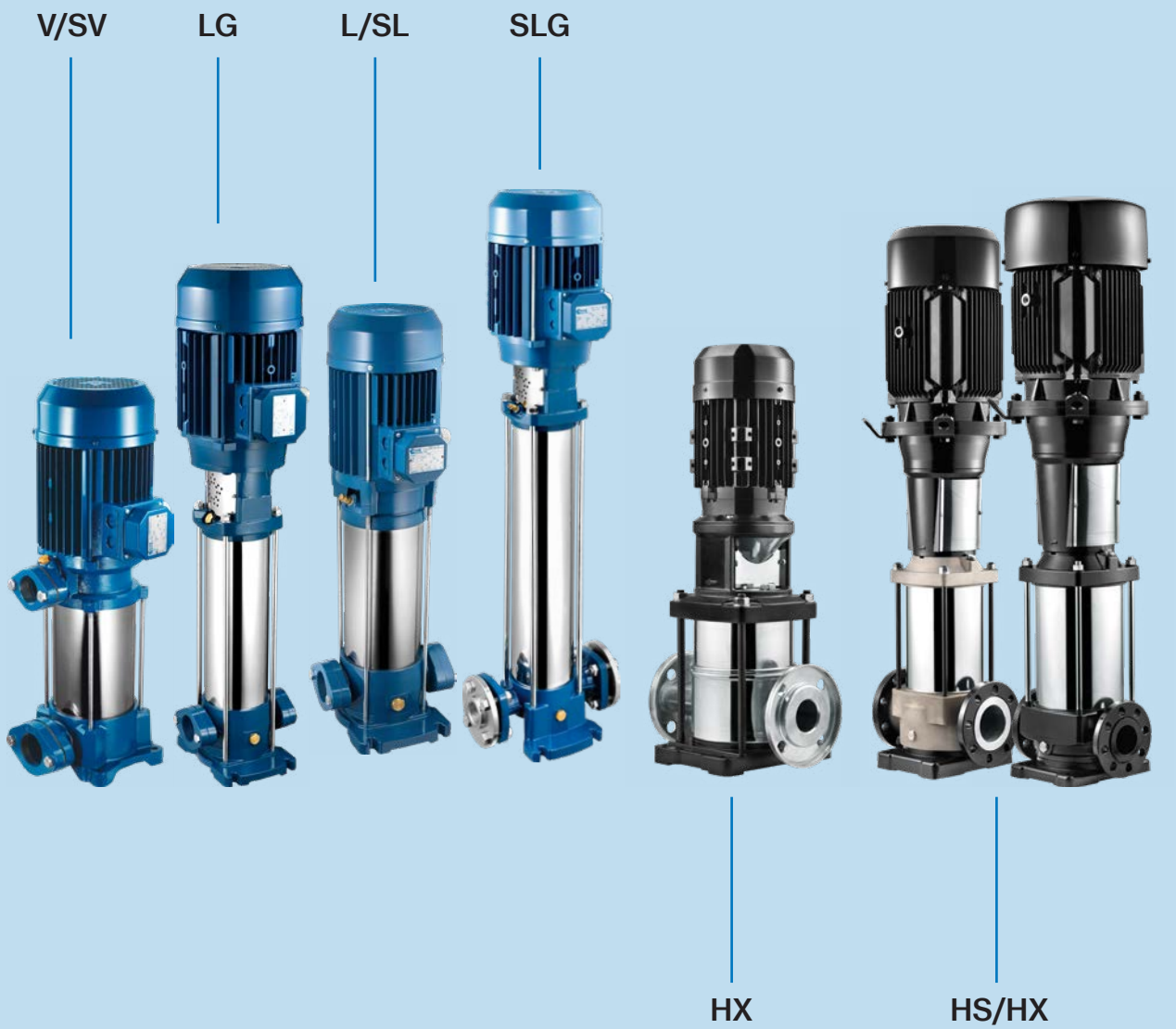


Family of vertical multistage monobloc pumps (V/L) with impellers in Noryl® or (SV/SL) in AISI 304; coupled pumps (LG) with impellers in Noryl® or (SLG) in AISI 304; coupled pumps (HS) with impellers in AISI 304 or (HX) in AISI 316.

**Applications:**

- Handling unloaded liquids
- Pressurization systems
- Residential and industrial irrigation and drinking water systems
- Washing systems

# MULTISTAGE

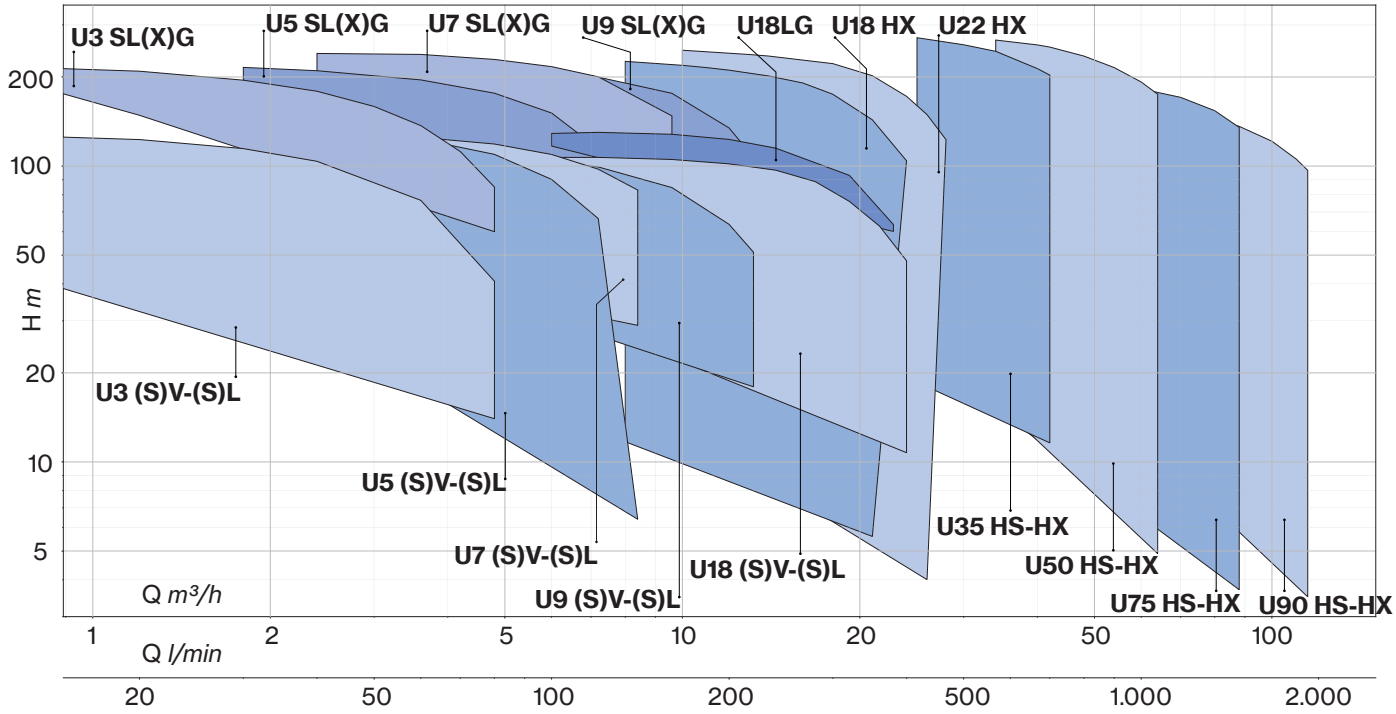
U3 SL(X)G
U5 SL(X)G
U7 SL(X)G
U9 SL(X)G
U18LG
U18 HX
U22 HX
200
100
50
H m
20
10
5
U3 (S)V-(S)L
U5 (S)V-(S)L
U7 (S)V-(S)L
U9 (S)V-(S)L
U18 (S)V-(S)L
U35 HS-HX
U50 HS-HX
U75 HS-HX
U90 HS-HX
Q m³/h
1
2
5
10
20
50
100
Q l/min
20
50
100
200
500
1.000
2.000

# ULTRA V/L

## Multistage Vertical

ULTRA V

ULTRA 3-5-7 L

ULTRA 9-18 L

Stainless steel multistage vertical pumps. Pumping of clean non-loaded fluids, pressurizing system, irrigation, drinking and glycol water, water treatment, food industry, heating and air conditioning, washing system.

| Construction features | |
|---|---|
| **Pump body** | cast iron |
| **Motor bracket** | cast iron |
| **Impellers, diffusers** | Noryl® |
| **Shell, motor shaft** | stainles steel AISI 304 |
| **Mechanical seal** | ceramic-graphite-EPDM<br>graphite-silicon carbide-EPDM |
| **Intermediate shaft guiding stage bush** | ceramic-tungsten carbide |
| **Ambient temperature** | max 40 °C |
| **Liquid temperature** | +5 ÷ +35 °C |
| **Max operating pressure** | 8 bar ≤ 6 impellers;<br>14 bar ≥ 7 impellers |
| **Pump body gasket** | EPDM |

| Motor | |
|---|---|
| **2 poles induction motor** | 3~ 230/400V - 50Hz P ⩽ 4kW<br>3~ 400/690V - 50Hz P > 4kW<br><br>1~ 230V-50Hz<br>(with thermal protection up to 1,85 kW) |
| **Insulation class** | F |
| **Protection degree** | IPX4<br>IPX5 ≥ 4,5 HP |

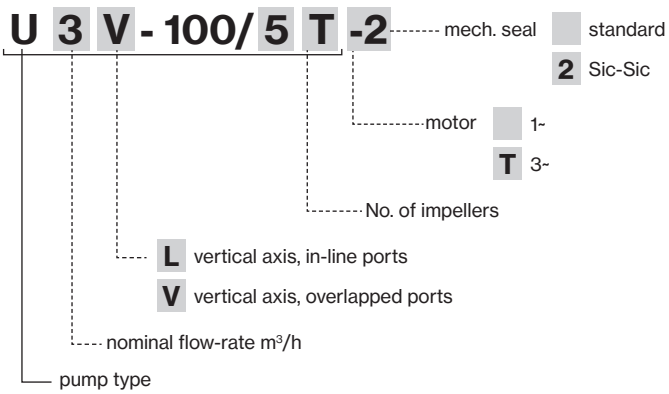


*More details of the mechanical seals are included on page 180*

# ULTRA LG

## Multistage Vertical

Stainless steel multistage vertical pumps. Pumping of clean non-loaded fluids, pressuriz ing system, irrigation, drinking and glycol water, water treatment, food industry, heating and air conditioning, washing system.

| Construction features | |
|---|---|
| **Pump body** | cast iron |
| **Motor bracket** | cast iron |
| **Impellers, diffusers** | Noryl® |
| **Shell, motor shaft** | stainles steel AISI 304 |
| **Mechanical seal** | ceramic-graphite-EPDM<br>graphite-silicon carbide-EPDM |
| **Intermediate shaft guiding stage bush** | ceramic-tungsten carbide |
| **Ambient temperature** | max 40 °C |
| **Liquid temperature** | +5 ÷ +35 °C |
| **Max operating pressure** | 14 bar |
| **Pump body gasket** | EPDM |

| Motor | |
|---|---|
| **2 poles induction motor** | 3~ 400/690V - 50Hz P > 4kW |
| **Insulation class** | F |
| **Protection degree** | IPX5 |

**U 18 L G - 920 / 10 T**

- T — motor T 3~
- 10 — No. of impellers
- G — coupling
- L — vertical axis, in-line ports
- 18 — nominal flow-rate m³/h
- U — pump type

*More details of the mechanical seals are included on page 180*

# ULTRA V/L

| TYPE - 50 Hz | | P2 | | P1 | | CURRENT | | Q (m³/h - l/min) | | | | | | |
|---|---|---|---|---|---|---|---|---|---|---|---|---|---|---|
| 1~ | 3~ | | | 1~ | 3~ | 1~ 230V | 3~ 400V | 0 | 0,6 | 1,2 | 1,8 | 2,4 | 3,6 | 4,8 |
| | | | | | | | | 0 | 10 | 20 | 30 | 40 | 60 | 80 |
| | | HP | kW | kW | | A | | H (m) | | | | | | |
| **U 3...-100/5** | **U 3...-100/5T** | 1 | 0,75 | 1,1 | 1 | 4,8 | 1,9 | 52,2 | 48,9 | 45,1 | 40,8 | 36,0 | 25,4 | 14,0 |
| **U 3...-120/6** | **U 3...-120/6T** | 1,2 | 0,9 | 1,2 | 1,2 | 5,6 | 2,6 | 62,8 | 58,7 | 54,5 | 49,6 | 43,9 | 32,1 | 18,3 |
| **U 3...-150/7** | **U 3...-150/7T** | 1,5 | 1,1 | 1,3 | 1,2 | 6,1 | 3,0 | 77,1 | 76,1 | 73,2 | 68,4 | 62,3 | 46,5 | 25,7 |
| **U 3...-180/8** | **U 3...-180/8T** | 2 | 1,5 | 1,5 | 1,4 | 7,0 | 3,1 | 88,1 | 87,2 | 83,5 | 77,6 | 70,2 | 51,3 | 26,0 |
| **U 3...-200/9** | **U 3...-200/9T** | 2 | 1,5 | 1,6 | 1,5 | 7,4 | 3,2 | 98,8 | 97,2 | 93,7 | 87,3 | 79,4 | 60,0 | 32,2 |
| **U 3...-250/10** | **U 3...-250/10T** | 2 | 1,5 | 1,7 | 1,7 | 7,9 | 3,5 | 109,3 | 108,2 | 103,6 | 96,3 | 87,5 | 65,3 | 34,5 |
| **U 3...-280/11** | **U 3...-280/11T** | 2,5 | 1,85 | 2,0 | 1,8 | 9,4 | 3,8 | 120,4 | 118,7 | 113,8 | 106,1 | 96,4 | 71,6 | 38,3 |
| **U 3...-300/12** | **U 3...-300/12T** | 2,5 | 1,85 | 2,1 | 2,0 | 9,8 | 4,0 | 130,3 | 128,5 | 122,9 | 114,6 | 103,8 | 76,6 | 40,8 |

| TYPE - 50 Hz | | P2 | | P1 | | CURRENT | | Q (m³/h - l/min) | | | | | | | |
|---|---|---|---|---|---|---|---|---|---|---|---|---|---|---|---|
| 1~ | 3~ | | | 1~ | 3~ | 1~ 230V | 3~ 400V | 0 | 1,8 | 2,4 | 3,6 | 4,8 | 6 | 7,2 | 8,4 |
| | | | | | | | | 0 | 30 | 40 | 60 | 80 | 100 | 120 | 140 |
| | | HP | kW | kW | | A | | H (m) | | | | | | | |
| **U 5...-120/4** | **U 5...-120/4T** | 1,2 | 0,9 | 1,13 | 1,13 | 5,2 | 2,5 | 45,3 | 41,3 | 39,6 | 35,6 | 30,8 | 24,9 | 17,6 | 6,4 |
| **U 5...-150/5** | **U 5...-150/5T** | 1,5 | 1,1 | 1,4 | 1,4 | 6,6 | 3,1 | 57,6 | 55,6 | 54,2 | 50,5 | 45,0 | 37,0 | 27,4 | |
| **U 5...-180/6** | **U 5...-180/6T** | 2 | 1,5 | 1,6 | 1,6 | 7,4 | 3,3 | 69,1 | 66,5 | 64,8 | 60,1 | 53,2 | 43,8 | 32,0 | |
| **U 5...-200/7** | **U 5...-200/7T** | 2 | 1,5 | 1,9 | 1,8 | 8,6 | 3,6 | 80,6 | 77,1 | 75,1 | 69,6 | 61,3 | 50,4 | 35,8 | |
| **U 5...-250/8** | **U 5...-250/8T** | 2,5 | 1,85 | 2,2 | 2,1 | 9,9 | 4,1 | 92,0 | 88,2 | 85,8 | 79,2 | 70,1 | 57,2 | 41,1 | |
| **U 5...-280/9** | **U 5...-280/9T** | 2,5 | 1,85 | 2,4 | 2,3 | 10,9 | 4,3 | 103,3 | 98,9 | 96,2 | 88,8 | 78,4 | 64,1 | 45,3 | |
| **U 5...-300/10** | **U 5...-300/10T** | 3 | 2,2 | 2,7 | 2,6 | 12,5 | 4,9 | 115,1 | 110,6 | 107,6 | 99,5 | 87,6 | 72,1 | 50,7 | |
| **U 5...-350/11** | **U 5...-350/11T** | 3,5 | 2,57 | 3,0 | 2,9 | 13,7 | 5,3 | 127,6 | 122,5 | 119,4 | 110,8 | 98,0 | 80,8 | 57,4 | |
| **-** | **U 5...-380/12T** | 4 | 3 | - | 3,2 | - | 6,0 | 140,3 | 135,4 | 132,1 | 123,2 | 109,5 | 90,1 | 66,5 | |

| TYPE - 50 Hz | | P2 | | P1 | | CURRENT | | Q (m³/h - l/min) | | | | | | |
|---|---|---|---|---|---|---|---|---|---|---|---|---|---|---|
| 1~ | 3~ | | | 1~ | 3~ | 1~ 230V | 3~ 400V | 0 | 2,4 | 3,6 | 4,8 | 6 | 7,2 | 8,4 |
| | | | | | | | | 0 | 40 | 60 | 80 | 100 | 120 | 140 |
| | | HP | kW | kW | | A | | H (m) | | | | | | |
| **U 7...-180/4** | **U 7...-180/4T** | 2 | 1,5 | 1,7 | 1,6 | 7,9 | 3,3 | 49,6 | 48,4 | 46,7 | 43,8 | 39,9 | 34,9 | 28,9 |
| **U 7...-250/5** | **U 7...-250/5T** | 2,5 | 1,85 | 2,2 | 2,0 | 9,9 | 4,0 | 63,2 | 62,1 | 60,3 | 56,9 | 52,1 | 46,2 | 39,0 |
| **U 7...-300/6** | **U 7...-300/6T** | 3 | 2,2 | 2,5 | 2,4 | 11,5 | 4,7 | 76,0 | 75,1 | 73,1 | 69,2 | 63,6 | 56,8 | 48,2 |
| **-** | **U 7...-350/7T** | 3,5 | 2,57 | - | 2,8 | - | 5,1 | 89,0 | 88,0 | 85,8 | 81,2 | 74,5 | 66,3 | 56,2 |
| **-** | **U 7...-400/8T** | 4 | 3 | - | 3,1 | - | 5,9 | 102,3 | 101,0 | 98,2 | 92,4 | 84,4 | 74,6 | 62,4 |
| **-** | **U 7...-450/9T** | 4,5 | 3,37 | - | 3,6 | - | 6,5 | 115,2 | 114,4 | 111,4 | 105,6 | 97,1 | 86,3 | 73,1 |
| **-** | **U 7...-550/10T** | 5,5 | 4 | - | 4,0 | - | 7,7 | 128,1 | 128,0 | 124,9 | 118,7 | 109,4 | 97,6 | 83,0 |

| TYPE - 50 Hz | | P2 | | P1 | | CURRENT | | Q (m³/h - l/min) | | | | | | |
|---|---|---|---|---|---|---|---|---|---|---|---|---|---|---|
| 1~ | 3~ | | | 1~ | 3~ | 1~ 230V | 3~ 400V | 0 | 3,6 | 4,8 | 7,2 | 9,6 | 12 | 13,2 |
| | | | | | | | | 0 | 60 | 80 | 120 | 160 | 200 | 220 |
| | | HP | kW | kW | | A | | H (m) | | | | | | |
| **U 9...-200/4** | **U 9...-200/4T** | 2 | 1,5 | 1,8 | 1,7 | 8,3 | 3,5 | 45,8 | 42,1 | 40,7 | 37,3 | 31,3 | 23,0 | 17,9 |
| **U 9...-250/5** | **U 9...-250/5T** | 2,5 | 1,85 | 2,3 | 2,1 | 10,4 | 4,1 | 56,9 | 52,2 | 50,4 | 46,1 | 38,8 | 28,2 | 22,3 |
| **U 9...-300/6** | **U 9...-300/6T** | 3 | 2,2 | 2,8 | 2,6 | 12,8 | 5,0 | 69,8 | 64,5 | 62,5 | 57,5 | 48,8 | 36,4 | 29,6 |
| **-** | **U 9...-400/7T** | 4 | 3 | - | 3,0 | - | 5,8 | 83,3 | 77,8 | 75,7 | 68,9 | 58,5 | 43,6 | 34,7 |
| **-** | **U 9...-450/8T** | 4,5 | 3,37 | - | 3,5 | - | 6,4 | 96,7 | 90,7 | 88,2 | 80,6 | 69,2 | 52,2 | 42,1 |
| **-** | **U 9...-500/9T** | 4,5 | 3,37 | - | 3,9 | - | 6,9 | 107,1 | 99,5 | 96,4 | 88,3 | 75,2 | 56,4 | 45,2 |
| **-** | **U 9...-550/10T** | 5,5 | 4 | - | 4,3 | - | 8,1 | 119,5 | 111,6 | 108,2 | 99,3 | 84,6 | 63,5 | 51,2 |

# ULTRA V/L

| TYPE - 50 Hz | P2 | | P1 | CURRENT | Q (m³/h - l/min) | | | | | | | | | |
|---|---|---|---|---|---|---|---|---|---|---|---|---|---|---|
| 3~ | | | | 3~ 400V | 0 | 6 | 7,2 | 9,6 | 12 | 14,4 | 16,8 | 19,2 | 21,6 | 24 |
| | | | | | 0 | 100 | 120 | 160 | 200 | 240 | 280 | 320 | 360 | 400 |
| | HP | kW | kW | A | H (m) | | | | | | | | | |
| **U 18...-250/3T** | 2,5 | 1,85 | 2,2 | 4,2 | 34,7 | 32,9 | 32,6 | 31,6 | 30,1 | 28,0 | 24,7 | 20,6 | 15,9 | 10,7 |
| **U 18...-400/4T** | 4 | 3 | 3,0 | 5,8 | 47,1 | 45,4 | 45,2 | 44,3 | 42,6 | 40,0 | 36,0 | 30,6 | 24,6 | 17,8 |
| **U 18...-450/5T** | 4,5 | 3,37 | 3,9 | 6,9 | 59,2 | 57,6 | 57,4 | 56,4 | 54,5 | 51,6 | 46,7 | 40,1 | 33,3 | 25,3 |
| **U 18...-550/6T** | 5,5 | 4 | 4,6 | 8,4 | 71,4 | 69,7 | 69,6 | 68,2 | 65,7 | 62,2 | 56,3 | 48,0 | 39,4 | 29,4 |
| **U 18...-750/8T** | 7,5 | 5,5 | 6,2 | 11,2 | 96,1 | 94,2 | 94,1 | 92,4 | 89,1 | 84,5 | 77,0 | 66,1 | 54,2 | 41,1 |
| **U 18...-900/9T** | 10 | 7,5 | 6,9 | 12,8 | 108,5 | 106,9 | 107,0 | 105,3 | 101,7 | 96,8 | 88,6 | 75,9 | 62,6 | 47,8 |

# ULTRA LG

| TYPE - 50 Hz | P2 | | P1 | CURRENT | Q (m³/h - l/min) | | | | | | | | | |
|---|---|---|---|---|---|---|---|---|---|---|---|---|---|---|
| 3~ | | | | 3~ 400V | 0 | 6 | 7,2 | 9,6 | 12 | 14,4 | 16,8 | 19,2 | 21,6 | 22,8 |
| | | | | | 0 | 100 | 120 | 160 | 200 | 240 | 280 | 320 | 360 | 380 |
| | HP | kW | kW | A | H (m) | | | | | | | | | |
| **U 18LG-920/10T** | 10 | 7,5 | 7,7 | 14,0 | 120,4 | 116,8 | 118,3 | 116,6 | 112,6 | 104,4 | 96,3 | 85,8 | 67,8 | 60,1 |
| **U 18LG-1000/11T** | 10 | 7,5 | 8,3 | 13,6 | 132,4 | 128,9 | 130,0 | 128,0 | 123,0 | 115,0 | 103,9 | 93,0 | 72,6 | 63,4 |

# ULTRA V/L

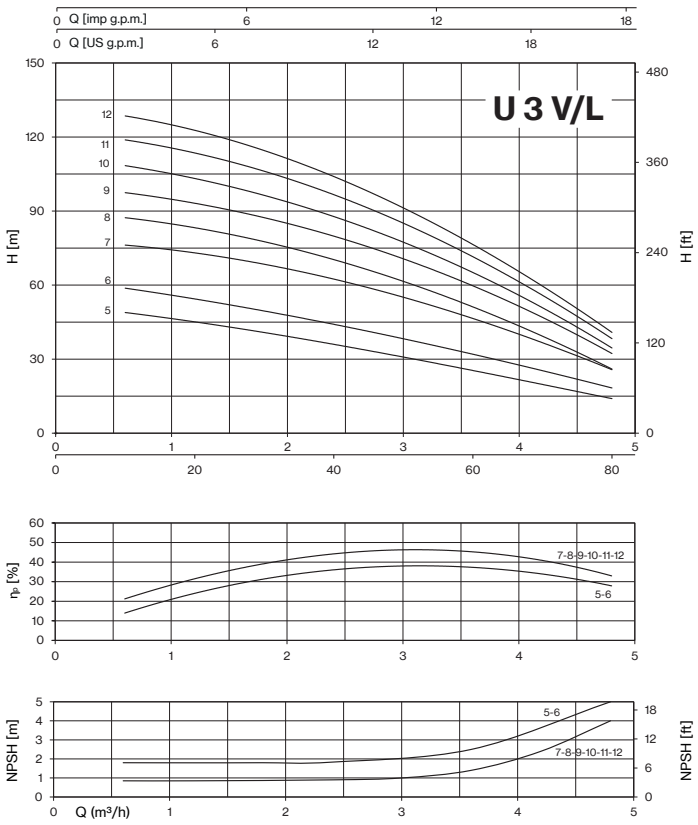


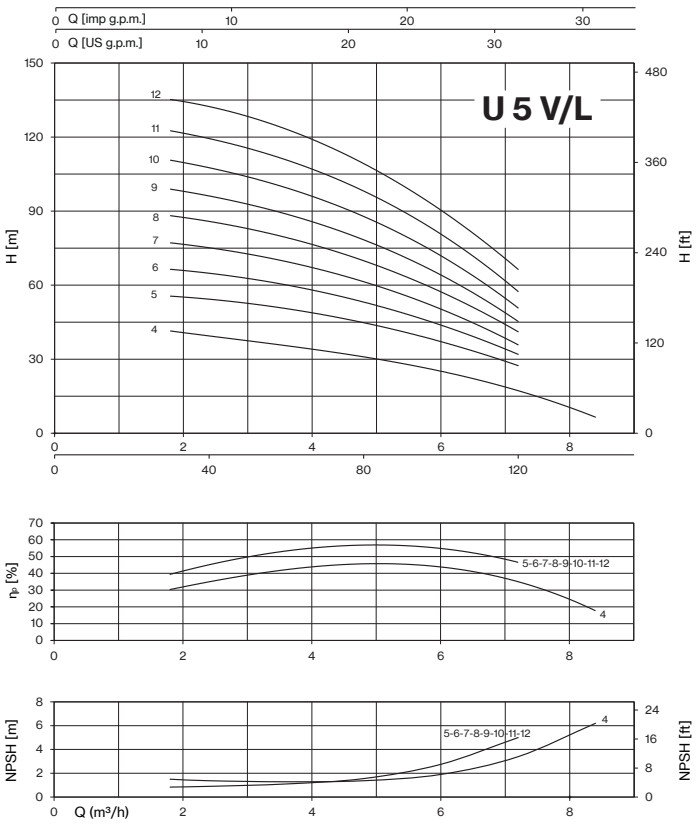

# ULTRA V/L-LG

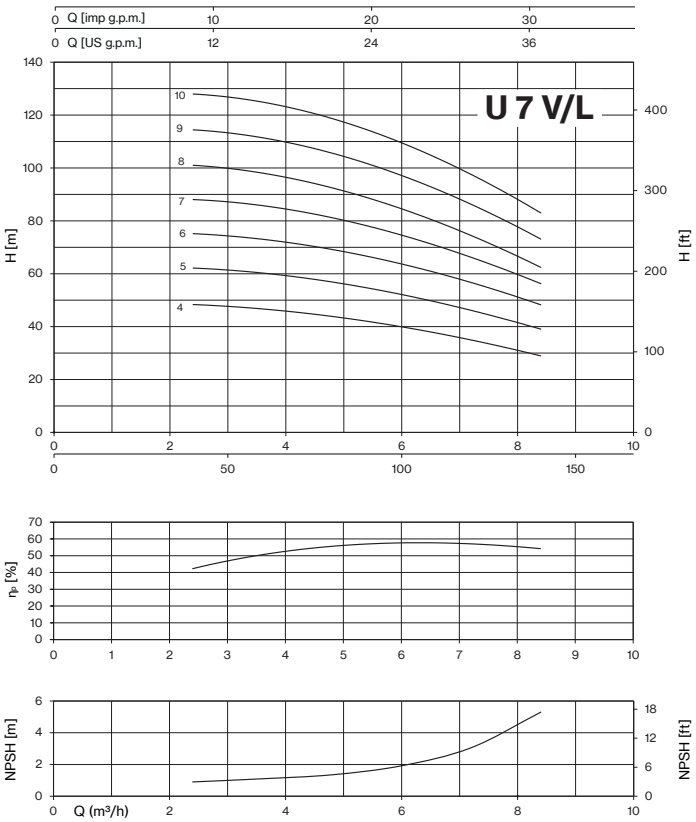
U 7 V/L
Q [imp g.p.m.]
Q [US g.p.m.]
H [m]
H [ft]
ηp [%]
NPSH [m]
NPSH [ft]
Q (m³/h)

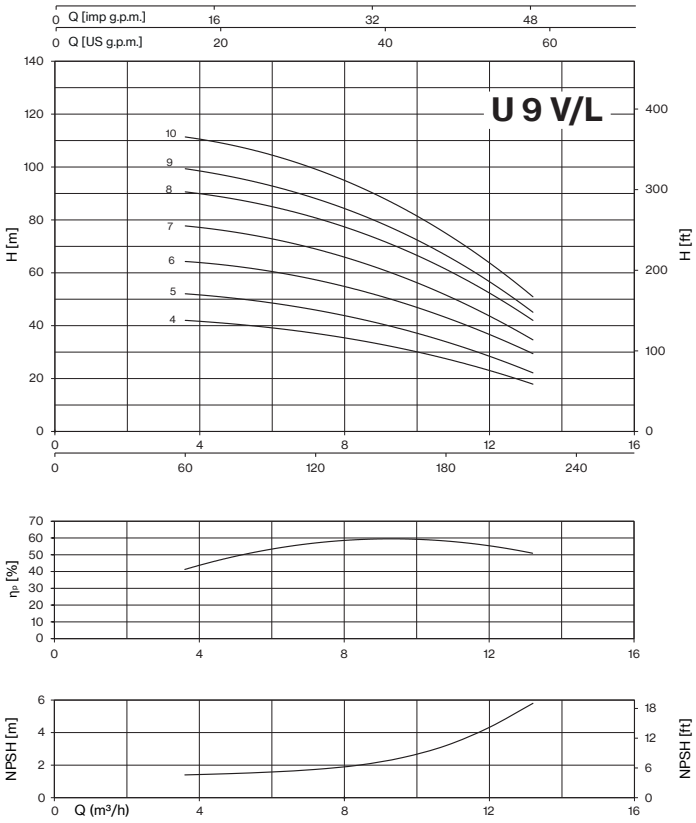
U 9 V/L
Q [imp g.p.m.]
Q [US g.p.m.]
H [m]
H [ft]
ηp [%]
NPSH [m]
NPSH [ft]
Q (m³/h)

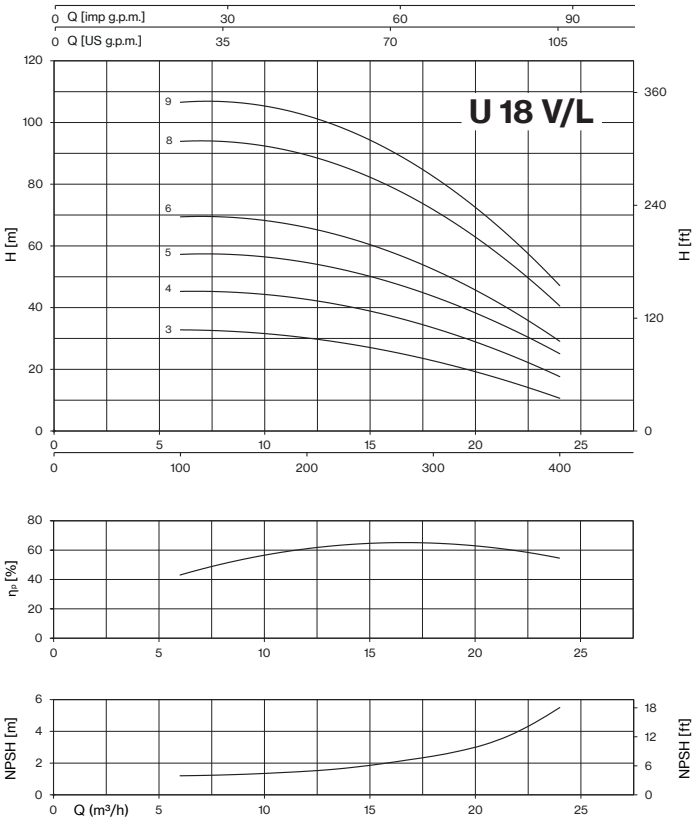
U 18 V/L
Q [imp g.p.m.]
Q [US g.p.m.]
H [m]
H [ft]
ηp [%]
NPSH [m]
NPSH [ft]
Q (m³/h)

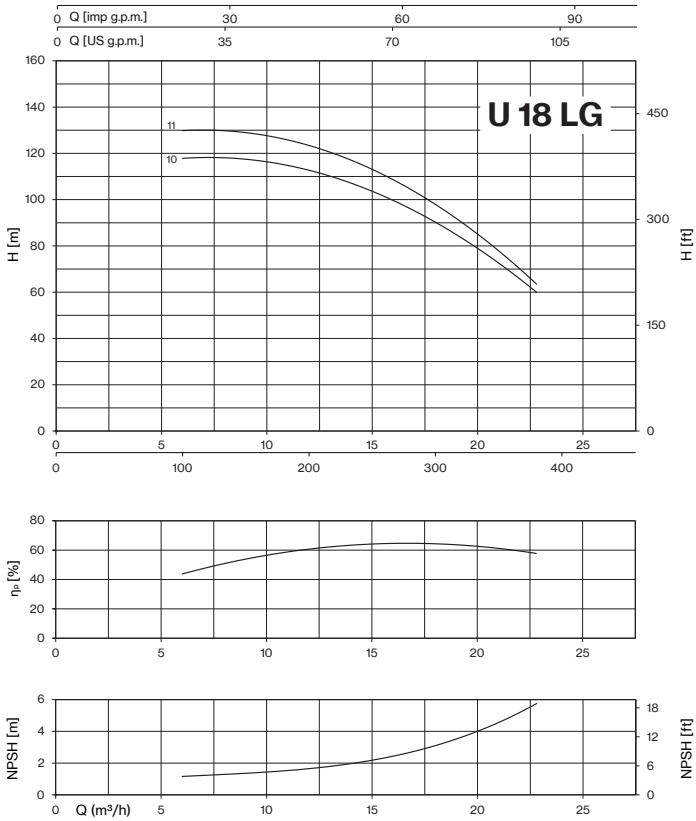
U 18 LG
Q [imp g.p.m.]
Q [US g.p.m.]
H [m]
H [ft]
ηp [%]
NPSH [m]
NPSH [ft]
Q (m³/h)

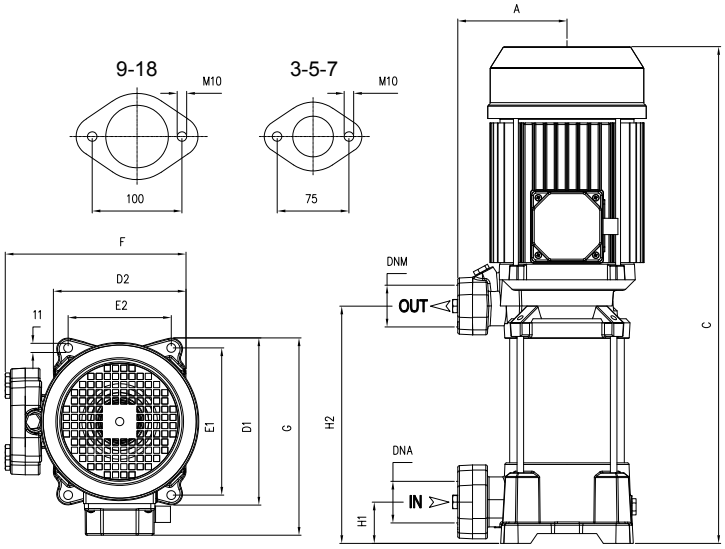


| TYPE | | DIMENSIONS (mm) | | | | | | | | | | | | | | | Kg | |
|---|---|---|---|---|---|---|---|---|---|---|---|---|---|---|---|---|---|---|
| ~1 | ~3 | A | C | D1 | D2 | E1 | E2 | F | G | H1 | H2 | DNA | DNM | I | L | M | ~1 | ~3 |
| **U 3V-100/5** | **U 3V-100/5T** | 135 | 413 | 204 | 162 | 178,5 | 125 | 229 | 213 | 40 | 202 | 1" ¼ G | 1" ¼ G | 580 | 231 | 235 | 17,5 | 17,5 |
| **U 3V-120/6** | **U 3V-120/6T** | 135 | 437 | 204 | 162 | 178,5 | 125 | 229 | 213 | 40 | 226 | | | 580 | 231 | 235 | 18 | 18 |
| **U 3V-150/7** | **U 3V-150/7T** | 135 | 521 | 204 | 162 | 178,5 | 125 | 229 | 220 | 40 | 250 | | | 580 | 231 | 235 | 24,5 | 25 |
| **U 3V-180/8** | **U 3V-180/8T** | 135 | 545 | 204 | 162 | 178,5 | 125 | 229 | 220 | 40 | 274 | | | 580 | 231 | 235 | 24,5 | 24,5 |
| **U 3V-200/9** | **U 3V-200/9T** | 135 | 569 | 204 | 162 | 178,5 | 125 | 229 | 220 | 40 | 298 | | | 580 | 231 | 235 | 25 | 25,5 |
| **U 3V-250/10** | **U 3V-250/10T** | 135 | 593 | 204 | 162 | 178,5 | 125 | 229 | 220 | 40 | 322 | | | 650 | 246 | 246 | 27,5 | 27,5 |
| **U 3V-280/11** | **U 3V-280/11T** | 135 | 672<br>T 617 | 204 | 162 | 178,5 | 125 | 229 | 228<br>T 220 | 40 | 346 | | | 580 | 231 | 235 | 29,5 | 28 |
| **U 3V-300/12** | **U 3V-300/12T** | 135 | 696<br>T 641 | 204 | 162 | 178,5 | 125 | 229 | 228<br>T 220 | 40 | 370 | | | 779 | 261 | 295 | 29,5 | 25 |
| **U 5V-120/4** | **U 5V-120/4T** | 135 | 389 | 204 | 162 | 178,5 | 125 | 229 | 213 | 40 | 178 | 1" ¼ G | 1" ¼ G | 580 | 231 | 235 | 17,5 | 17,5 |
| **U 5V-150/5** | **U 5V-150/5T** | 135 | 473 | 204 | 162 | 178,5 | 125 | 229 | 220 | 40 | 202 | | | 580 | 231 | 235 | 24 | 24 |
| **U 5V-180/6** | **U 5V-180/6T** | 135 | 497 | 204 | 162 | 178,5 | 125 | 229 | 220 | 40 | 226 | | | 580 | 231 | 235 | 24,5 | 24,5 |
| **U 5V-200/7** | **U 5V-200/7T** | 135 | 521 | 204 | 162 | 178,5 | 125 | 229 | 220 | 40 | 250 | | | 580 | 231 | 235 | 23,5 | 24,5 |
| **U 5V-250/8** | **U 5V-250/8T** | 135 | 545 | 204 | 162 | 178,5 | 125 | 229 | 220 | 40 | 274 | | | 580 | 231 | 235 | 25 | 24 |
| **U 5V-280/9** | **U 5V-280/9T** | 135 | 624<br>T 569 | 204 | 162 | 178,5 | 125 | 229 | 228<br>T 220 | 40 | 298 | | | 650 | 246 | 246 | 29 | 24 |
| **U 5V-300/10** | **U 5V-300/10T** | 135 | 648<br>T 593 | 204 | 162 | 178,5 | 125 | 229 | 228<br>T 220 | 40 | 322 | | | 779<br>T 650 | 261<br>246 | 295<br>246 | 33 | 25,5 |
| **U 5V-350/11** | **U 5V-350/11T** | 135 | 672 | 204 | 162 | 178,5 | 125 | 229 | 228 | 40 | 346 | | | 779 | 261 | 295 | 33,5 | 30,5 |
| **-** | **U 5V-380/12T** | 135 | 696 | 204 | 162 | 178.5 | 125 | 229 | 228 | 40 | 370 | | | 779 | 261 | 295 | 32,5 | 32,5 |
| **U 7V-180/4** | **U 7V-180/4T** | 135 | 422 | 204 | 162 | 178,5 | 125 | 229 | 220 | 40 | 178 | 1" ¼ G | 1" ¼ G | 580 | 231 | 235 | 22,5 | 24 |
| **U 7V-250/5** | **U 7V-250/5T** | 135 | 473 | 204 | 162 | 178,5 | 125 | 229 | 220 | 40 | 202 | | | 580 | 231 | 235 | 24 | 23 |
| **U 7V-300/6** | **U 7V-300/6T** | 135 | 552<br>T 497 | 204 | 162 | 178,5 | 125 | 229 | 228<br>T 220 | 40 | 226 | | | 580 | 231 | 235 | 30,5 | 24,5 |
| **-** | **U 7V-350/7T** | 135 | 575 | 204 | 162 | 178,5 | 125 | 229 | 228 | 40 | 250 | | | 650 | 246 | 246 | - | 28,5 |
| **-** | **U 7V-400/8T** | 135 | 600 | 204 | 162 | 178,5 | 125 | 229 | 228 | 40 | 274 | | | 650 | 246 | 246 | - | 31,5 |
| **-** | **U 7V-450/9T** | 135 | 653 | 204 | 162 | 178,5 | 125 | 235 | 243 | 40 | 301 | | | 779 | 261 | 295 | - | 36,5 |
| **-** | **U 7V-550/10T** | 135 | 676 | 204 | 162 | 178,5 | 125 | 235 | 243 | 40 | 325 | | | 779 | 261 | 295 | - | 41,5 |
| **U 9V-200/4** | **U 9V-200/4T** | 135 | 473 | 204 | 162 | 178,5 | 125 | 229 | 220 | 40 | 202 | 1" ½ G | 1" ¼ G | 580 | 231 | 235 | 22,5 | 24 |
| **U 9V-250/5** | **U 9V-250/5T** | 135 | 503 | 204 | 162 | 178,5 | 125 | 229 | 220 | 40 | 232 | | | 580 | 231 | 235 | 24 | 23 |
| **U 9V-300/6** | **U 9V-300/6T** | 135 | 588<br>T 533 | 204 | 162 | 178,5 | 125 | 229 | 228<br>T 220 | 40 | 262 | | | 580 | 231 | 235 | 31 | 24,5 |
| **-** | **U 9V-400/7T** | 135 | 617 | 204 | 162 | 178,5 | 125 | 229 | 228 | 40 | 292 | | | 650 | 246 | 246 | - | 31,5 |
| **-** | **U 9V-450/8T** | 135 | 677 | 204 | 162 | 178,5 | 125 | 235 | 243 | 40 | 325 | | | 779 | 261 | 295 | - | 35,5 |
| **-** | **U 9V-500/9T** | 135 | 707 | 204 | 162 | 178,5 | 125 | 235 | 243 | 40 | 355 | | | 779 | 261 | 295 | - | 37 |
| **-** | **U 9V-550/10T** | 135 | 737 | 204 | 162 | 178,5 | 125 | 235 | 243 | 40 | 385 | | | 779 | 261 | 295 | - | 42 |
| **-** | **U 18V-250/3T** | 135 | 481 | 204 | 162 | 178,5 | 125 | 229 | 220 | 50 | 211 | 2" G | 1" ½ G | 580 | 231 | 235 | - | 24 |
| **-** | **U 18V-400/4T** | 135 | 573 | 204 | 162 | 178,5 | 125 | 229 | 228 | 50 | 248 | | | 580 | 231 | 235 | - | 32 |
| **-** | **U 18V-450/5T** | 135 | 640 | 204 | 162 | 178,5 | 125 | 235 | 243 | 50 | 289 | | | 779 | 261 | 295 | - | 37 |
| **-** | **U 18V-550/6T** | 135 | 678 | 204 | 162 | 178,5 | 125 | 235 | 243 | 50 | 326 | | | 779 | 261 | 295 | - | 42 |
| **-** | **U 18V-750/8T** | 135 | 815 | 204 | 162 | 178,5 | 125 | 255 | 253 | 50 | 401 | | | 909 | 274 | 303 | - | 52 |
| **-** | **U 18V-900/9T** | 135 | 852 | 204 | 162 | 178,5 | 125 | 255 | 253 | 50 | 439 | | | 909 | 274 | 303 | - | 58 |

# ULTRA L

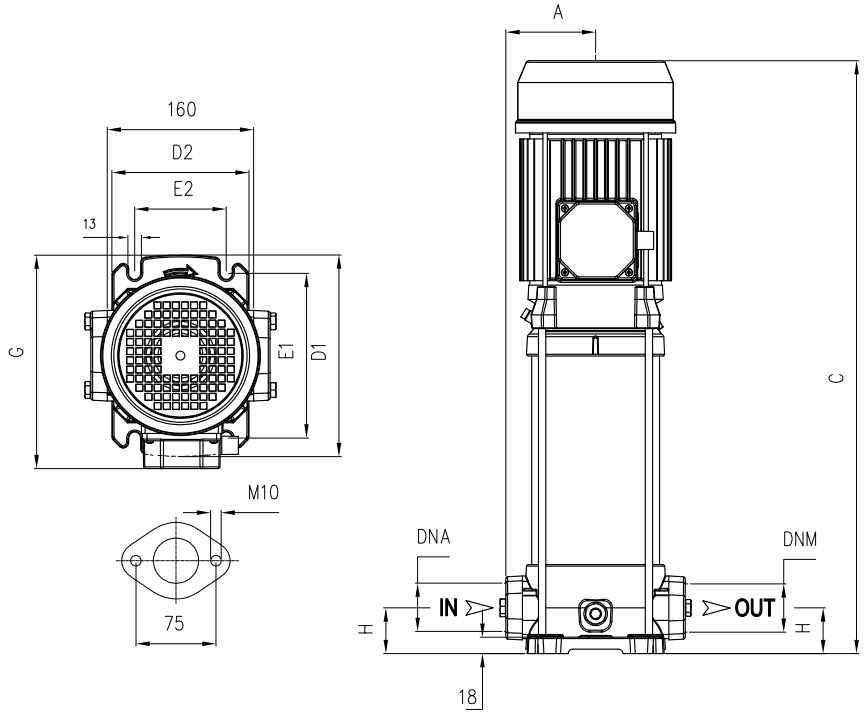


| TYPE | | DIMENSIONS (mm) | | | | | | | | | | | | | Kg | |
|---|---|---|---|---|---|---|---|---|---|---|---|---|---|---|---|---|
| ~1 | ~3 | A | C | D1 | D2 | E1 | E2 | G | H | DNA | DNM | I | L | M | ~1 | ~3 |
| **U 3L-100/5** | **U 3L-100/5T** | 98 | 429 | 220 | 150 | 180 | 100 | 228 | 50 | 1" ¼ G | 1" ¼ G | 580 | 231 | 235 | 19 | 19 |
| **U 3L-120/6** | **U 3L-120/6T** | 98 | 453 | 220 | 150 | 180 | 100 | 228 | 50 | | | 580 | 231 | 235 | 20 | 20 |
| **U 3L-150/7** | **U 3L-150/7T** | 98 | 537 | 220 | 150 | 180 | 100 | 228 | 50 | | | 539 | 261 | 280 | 26,5 | 27 |
| **U 3L-180/8** | **U 3L-180/8T** | 98 | 561 | 220 | 150 | 180 | 100 | 228 | 50 | | | 580 | 231 | 235 | 26,5 | 26,5 |
| **U 3L-200/9** | **U 3L-200/9T** | 98 | 585 | 220 | 150 | 180 | 100 | 228 | 50 | | | 664 | 261 | 295 | 28 | 28,5 |
| **U 3L-250/10** | **U 3L-250/10T** | 98 | 609 | 220 | 150 | 180 | 100 | 228 | 50 | | | 664 | 261 | 295 | 27,5 | 27,5 |
| **U 3L-280/11** | **U 3L-280/11T** | 98 | 688<br>T 633 | 220 | 150 | 180 | 100 | 236<br>T 228 | 50 | | | 779<br>T 664 | 261 | 295 | 32,5 | 28 |
| **U 3L-300/12** | **U 3L-300/12T** | 98 | 712<br>T 657 | 220 | 150 | 180 | 100 | 236<br>T 228 | 50 | | | 779 | 261 | 295 | 33 | 28,5 |
| **U 5L-120/4** | **U 5L-120/4T** | 98 | 405 | 220 | 150 | 180 | 100 | 221 | 50 | 1" ¼ G | 1" ¼ G | 580 | 231 | 235 | 19,5 | 19 |
| **U 5L-150/5** | **U 5L-150/5T** | 98 | 489 | 220 | 150 | 180 | 100 | 228 | 50 | | | 580 | 231 | 235 | 26,5 | 26,5 |
| **U 5L-180/6** | **U 5L-180/6T** | 98 | 513 | 220 | 150 | 180 | 100 | 228 | 50 | | | 539 | 261 | 280 | 26,5 | 26,5 |
| **U 5L-200/7** | **U 5L-200/7T** | 98 | 537 | 220 | 150 | 180 | 100 | 228 | 50 | | | 539 | 261 | 280 | 25,5 | 27 |
| **U 5L-250/8** | **U 5L-250/8T** | 98 | 561 | 220 | 150 | 180 | 100 | 228 | 50 | | | 580 | 231 | 235 | 27 | 26 |
| **U 5L-280/9** | **U 5L-280/9T** | 98 | 640<br>T 585 | 220 | 150 | 180 | 100 | 236<br>T 228 | 50 | | | 664 | 261 | 295 | 31,5 | 27 |
| **U 5L-300/10** | **U 5L-300/10T** | 98 | 664<br>T 609 | 220 | 150 | 180 | 100 | 236<br>T 228 | 50 | | | 779<br>T 664 | 261 | 295 | 35 | 28,5 |
| **U 5L-350/11** | **U 5L-350/11T** | 98 | 687 | 220 | 150 | 180 | 100 | 236 | 50 | | | 779 | 261 | 295 | 35,5 | 32,5 |
| **-** | **U 5L-380/12T** | 98 | 712 | 220 | 150 | 180 | 100 | 236 | 50 | | | 779 | 261 | 295 | - | 35,5 |
| **U 7L-180/4** | **U 7L-180/4T** | 98 | 465 | 220 | 150 | 180 | 100 | 228 | 50 | 1" ¼ G | 1" ¼ G | 590 | 231 | 235 | 25 | 26 |
| **U 7L-250/5** | **U 7L-250/5T** | 98 | 489 | 220 | 150 | 180 | 100 | 228 | 50 | | | 590 | 231 | 235 | 26 | 25 |
| **U 7L-300/6** | **U 7L-300/6T** | 98 | 568<br>T 513 | 220 | 150 | 180 | 100 | 236<br>T 228 | 50 | | | 664<br>T 539 | 261 | 295<br>280 | 33,5 | 26,5 |
| **-** | **U 7L-350/7T** | 98 | 590 | 220 | 150 | 180 | 100 | 236 | 50 | | | 664 | 261 | 295 | - | 31 |
| **-** | **U 7L-400/8T** | 98 | 614 | 220 | 150 | 180 | 100 | 236 | 50 | | | 664 | 261 | 295 | - | 34,5 |
| **-** | **U 7L-450/9T** | 98 | 668 | 220 | 150 | 180 | 100 | 251 | 50 | | | 779 | 261 | 295 | - | 38,5 |
| **-** | **U 7L-550/10T** | 98 | 692 | 220 | 150 | 180 | 100 | 251 | 50 | | | 779 | 261 | 295 | - | 43,5 |

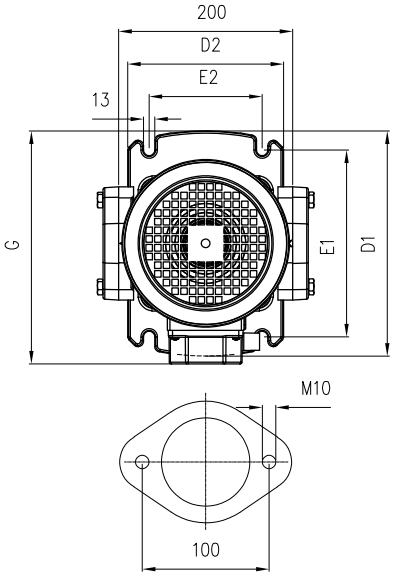


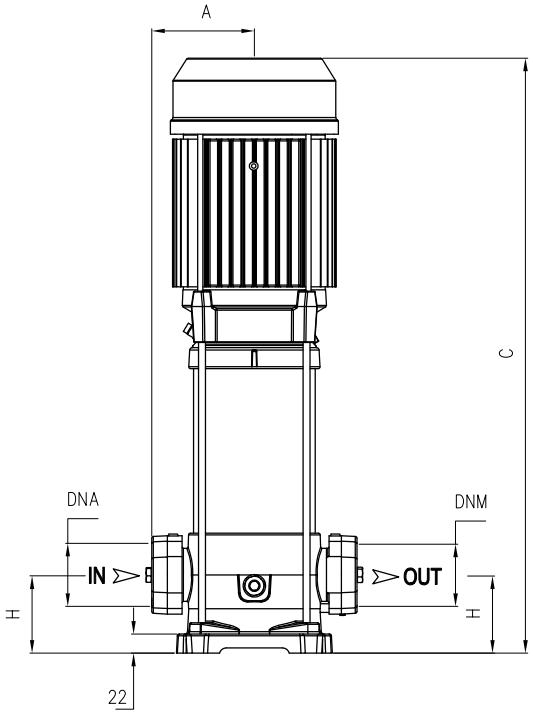


| TYPE | | DIMENSIONS (mm) | | | | | | | | | | | | | Kg | |
|---|---|---|---|---|---|---|---|---|---|---|---|---|---|---|---|---|
| ~1 | ~3 | A | C | D1 | D2 | E1 | E2 | G | H | DNA | DNM | I | L | M | ~1 | ~3 |
| **U 9L-200/4** | **U 9L-200/4T** | 118 | 520 | 260 | 180 | 215 | 130 | 248 | 80 | 1" ½ G | 1" ½ G | 539 | 261 | 280 | 28,5 | 30 |
| **U 9L-250/5** | **U 9L-250/5T** | 118 | 550 | 260 | 180 | 215 | 130 | 248 | 80 | | | 664 | 261 | 295 | 30,5 | 29,5 |
| **U 9L-300/6** | **U 9L-300/6T** | 118 | 635<br>T 580 | 260 | 180 | 215 | 130 | 256<br>T 248 | 80 | | | 664 | 261 | 295 | 37,5 | 31 |
| **-** | **U 9L-400/7T** | 118 | 663 | 260 | 180 | 215 | 130 | 256 | 80 | | | 779 | 261 | 295 | - | 38 |
| **-** | **U 9L-450/8T** | 118 | 723 | 260 | 180 | 215 | 130 | 271 | 80 | | | 779 | 261 | 295 | - | 42,5 |
| **-** | **U 9L-500/9T** | 118 | 763 | 260 | 180 | 215 | 130 | 271 | 80 | | | 779 | 261 | 295 | - | 43 |
| **-** | **U 9L-550/10T** | 118 | 783 | 260 | 180 | 215 | 130 | 271 | 80 | | | 909 | 274 | 303 | - | 48 |
| **-** | **U 18L-250/3T** | 118 | 482 | 260 | 180 | 215 | 130 | 251 | 90 | 2" G | 2" G | 664 | 261 | 295 | - | 29,5 |
| **-** | **U 18L-400/4T** | 118 | 603 | 260 | 180 | 215 | 130 | 257 | 90 | | | 664 | 261 | 295 | - | 37,5 |
| **-** | **U 18L-450/5T** | 118 | 680 | 260 | 180 | 215 | 130 | 271 | 90 | | | 779 | 261 | 295 | - | 42 |
| **-** | **U 18L-550/6T** | 118 | 718 | 260 | 180 | 215 | 130 | 271 | 90 | | | 779 | 261 | 295 | - | 47 |
| **-** | **U 18L-750/8T** | 118 | 855 | 260 | 180 | 215 | 130 | 280 | 90 | | | 909 | 274 | 303 | - | 56,5 |
| **-** | **U 18L-900/9T** | 118 | 893 | 260 | 180 | 215 | 130 | 280 | 90 | | | 909 | 274 | 303 | - | 63 |

| LOTS | | | | |
|---|---|---|---|---|
| MODEL | TRUCK | | CONTAINER | |
| | PALLET (cm) | N° pumps | PALLET (cm) | N° pumps |
| **U 3V-100/5(T)÷200/9(T)** | 80×120×150 | 42 | 80×120×175 | 49 |
| **U 3V-250/10(T)÷300/12(T)** | 80×120×155 | 30 | 80×120×180 | 35 |
| **U 5V-120/4(T)÷250/8(T)** | 80×120×150 | 42 | 80×120×175 | 49 |
| **U 5V-280/9(T)** | 80×120×155 | 30 | 80×120×180 | 35 |
| **U 5V-300/10** | 85×110×125 | 20 | 85×110×150 | 24 |
| **U 5V-300/10T** | 80×120×155 | 30 | 80×120×180 | 35 |
| **U 5V-350/11(T)÷380/12T** | 85×110×125 | 20 | 85×110×150 | 24 |
| **U 7V-180/4(T)÷300/6(T)** | 80×120×150 | 42 | 80×120×175 | 49 |
| **U 7V-350/7T** | 80×120×155 | 30 | 80×120×175 | 35 |
| **U 7V-400/8T** | 80×120×155 | 30 | 80×120×180 | 35 |
| **U 7V-450/9T÷550/10T** | 85×110×125 | 20 | 85×110×150 | 24 |
| **U 9V-200/4(T)÷300/6(T)** | 80×120×150 | 42 | 80×120×175 | 49 |
| **U 9V-400/7T** | 80×120×155 | 30 | 80×120×180 | 35 |
| **U 9V-450/8T÷550/10T** | 85×110×125 | 20 | 85×110×150 | 24 |
| **U 18V-250/3T÷400/4T** | 80×120×150 | 42 | 80×120×175 | 49 |
| **U 18V-450/5T÷550/6T** | 85×110×125 | 20 | 85×110×150 | 24 |
| **U 18V-750/8T÷900/9T** | 92×120×135 | 20 | 85×110×165 | 24 |

| LOTS | | | | |
|---|---|---|---|---|
| MODEL | TRUCK | | CONTAINER | |
| | PALLET (cm) | N° pumps | PALLET (cm) | N° pumps |
| **U 3L-100/5(T)÷180/8(T)** | 85×110×150 | 42 | 85×110×175 | 49 |
| **U 3L-200/9(T)÷250/10(T)** | 80×120×150 | 30 | 80×120×170 | 35 |
| **U 3L-280/11(T)÷300/12(T)** | 85×110×125 | 20 | 85×110×150 | 24 |
| **U 5L-120/4(T)÷250/8(T)** | 85×110×150 | 42 | 85×110×175 | 49 |
| **U 5L-280/9(T)** | 80×120×150 | 30 | 80×120×170 | 35 |
| **U 5L-300/10** | 85×110×125 | 20 | 85×110×150 | 24 |
| **U 5L-300/10(T)** | 80×120×150 | 30 | 80×120×170 | 35 |
| **U 5L-350/11(T)÷380/12T** | 85×110×125 | 20 | 85×110×150 | 24 |
| **U 7L-180/4T÷250/5T** | 85×110×150 | 42 | 85×110×175 | 49 |
| **U 7L-300/6T÷400/8T** | 80×120×150 | 30 | 80×120×170 | 35 |
| **U 7L-450/9T÷550/10T** | 85×110×125 | 20 | 85×110×150 | 24 |
| **U 9L-200/4(T)÷400/7(T)** | 80×120×155 | 25 | 80×120×185 | 30 |
| **U 9L-450/8T÷550/10T** | 85×110×125 | 20 | 85×110×150 | 24 |
| **U 18L-250/3T÷400/4T** | 80×120×155 | 25 | 80×120×185 | 30 |
| **U 18L-450/5T÷550/6T** | 85×110×125 | 20 | 85×110×150 | 24 |
| **U 18L-750/8T÷900/9T** | 85×110×135 | 20 | 85×110×165 | 24 |

# ULTRA LG

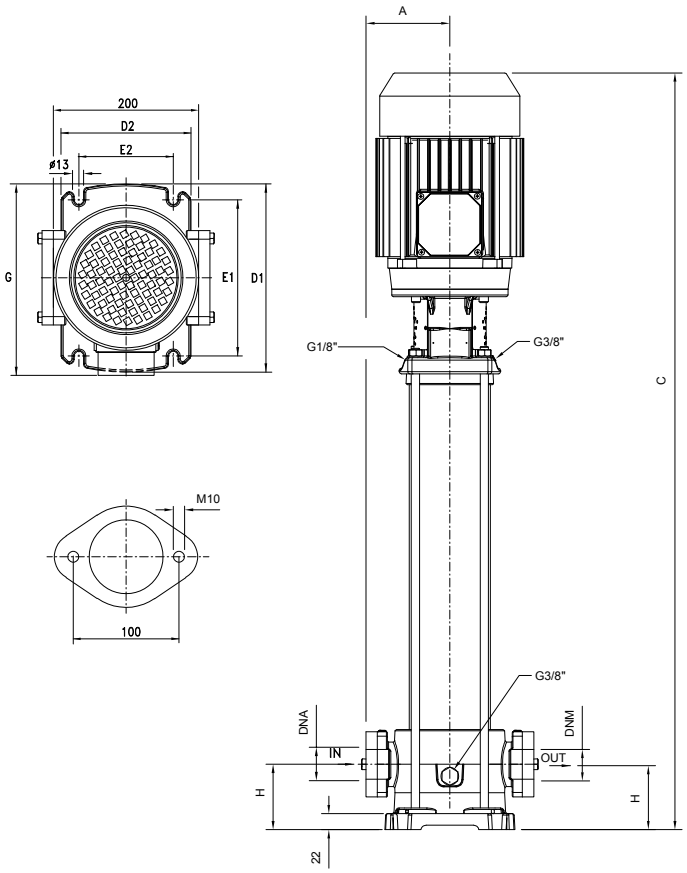


| TYPE | DIMENSIONS (mm) | | | | | | | | | | | | | Kg |
|---|---|---|---|---|---|---|---|---|---|---|---|---|---|---|
| ~3 | A | C | D1 | D2 | E1 | E2 | G | H | DNA | DNM | I | L | M | |
| **U 18LG-920/10T** | 118 | 1019 | 260 | 180 | 215 | 130 | 307 | 90 | 2” G | 2” G | 1098 | 327 | 290 | 68 |
| **U 18LG-1000/11T** | 118 | 1057 | 260 | 180 | 215 | 130 | 307 | 90 | | | | | | 76 |

| LOTS | | | | |
|---|---|---|---|---|
| MODEL | TRUCK | | CONTAINER | |
| | PALLET (cm) | N° pumps | PALLET (cm) | N° pumps |
| **U 18LG-920/10T - 1000/11T** | 100×120×150 | 12 | 100×120×150 | 12 |

# ULTRA SV/SL/SLX

## Multistage Vertical

Stainless steel multistage vertical pumps. Pumping of clean non-loaded fluids, pressurizing system, irrigation, drinking and glycol water, water treatment, food industry, heating and air conditioning, washing system.

| Construction features | |
|---|---|
| **Pump body** | cast iron (SV/SL);<br>stainless steel AISI 304 (SLX) |
| **Motor bracket** | cast iron |
| **Impellers, diffusers, shell, motor shaft** | stainless steel AISI 304 |
| **Mechanical seal** | ceramic-graphite-EPDM<br>graphite-silicon carbide-EPDM |
| **Intermediate shaft guiding stage bush** | ceramic-tungsten carbide |
| **Ambient temperature** | max 40 °C |
| **Liquid temperature** | +5 ÷ 90 °C (SV)<br>-15 ÷ 110 °C (SL/SLX) |
| **Max operating pressure** | 8 bar ≤ 6 impellers;<br>14 bar ≥ 7 impellers |
| **Pump body gasket** | EPDM |

| Motor | |
|---|---|
| **2 poles induction motor** | 3~ 230/400V - 50Hz P ⩽ 4kW<br>3~ 400/690V - 50Hz P > 4kW<br><br>1~ 230V-50Hz<br>(with thermal protection up to 1,85 kW) |
| **Insulation class** | F |
| **Protection degree** | IPX4<br>IPX5 ≥ 4,5 HP |

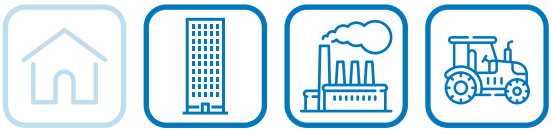

**U 3 S V - 100/ 5 T -2**

- mech. seal: standard; **2** Sic-Sic
- motor: 1~; **T** 3~
- No. of impellers
- **V** vertical axis, overlapped ports
- **L** vertical axis, in-line ports
- **LX** vertical axis, in-line ports, stainless steel pump body
- stainless steel hydraulic part
- nominal flow-rate m³/h
- pump type

ULTRA SV

ULTRA 3-5-7 SL

ULTRA 9-18 SL

ULTRA SLX

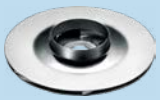

*More details of the mechanical seals are included on page 180*

# ULTRA SV/SL/SLX

| TYPE - 50 Hz | | P2 | | P1 | | CURRENT | | Q (m³/h - l/min) | | | | | | |
|---|---|---|---|---|---|---|---|---|---|---|---|---|---|---|
| 1~ | 3~ | | | 1~ | 3~ | 1~ 230V | 3~ 400V | 0 | 0,6 | 1,2 | 1,8 | 2,4 | 3,6 | 4,8 |
| | | | | | | | | 0 | 10 | 20 | 30 | 40 | 60 | 80 |
| | | HP | kW | kW | | A | | H (m) | | | | | | |
| **U 3...-100/5** | **U 3...-100/5T** | 1 | 0,75 | 1 | 0,9 | 4,4 | 1,7 | 55,3 | 53,5 | 50,3 | 46,5 | 42,1 | 31,6 | 17,7 |
| **U 3...-120/6** | **U 3...-120/6T** | 1,2 | 0,9 | 1,1 | 1,1 | 5,1 | 2,5 | 66,6 | 64,4 | 60,8 | 56,0 | 50,7 | 38,1 | 22,4 |
| **U 3...-150/7** | **U 3...-150/7T** | 1,5 | 1,1 | 1,4 | 1,4 | 6,6 | 3,1 | 75,6 | 73,3 | 69,4 | 64,8 | 58,9 | 44,4 | 26,1 |
| **U 3...-180/8** | **U 3...-180/8T** | 2 | 1,5 | 1,5 | 1,5 | 7,0 | 3,2 | 86,7 | 83,9 | 79,3 | 73,9 | 67,3 | 51,0 | 29,9 |
| **U 3...-200/9** | **U 3...-200/9T** | 2 | 1,5 | 1,7 | 1,6 | 7,6 | 3,3 | 97,0 | 93,8 | 88,5 | 82,5 | 74,7 | 56,4 | 32,9 |
| **U 3...-250/10** | **U 3...-250/10T** | 2 | 1,5 | 1,9 | 1,7 | 8,6 | 3,5 | 107,2 | 103,4 | 97,3 | 90,5 | 82,0 | 61,5 | 35,6 |
| **U 3...-280/11** | **U 3...-280/11T** | 2,5 | 1,85 | 2,1 | 1,9 | 9,8 | 3,9 | 117,2 | 112,8 | 106,6 | 98,8 | 89,8 | 66,8 | 37,3 |
| **U 3...-300/12** | **U 3...-300/12T** | 2,5 | 1,85 | 2,2 | 2,1 | 10,2 | 4,1 | 126,4 | 121,3 | 114,5 | 106,1 | 95,9 | 71,7 | 40,0 |

| TYPE - 50 Hz | | P2 | | P1 | | CURRENT | | Q (m³/h - l/min) | | | | | | | |
|---|---|---|---|---|---|---|---|---|---|---|---|---|---|---|---|
| 1~ | 3~ | | | 1~ | 3~ | 1~ 230V | 3~ 400V | 0 | 1,8 | 2,4 | 3,6 | 4,8 | 6 | 7,2 | 8,4 |
| | | | | | | | | 0 | 30 | 40 | 60 | 80 | 100 | 120 | 140 |
| | | HP | kW | kW | | A | | H (m) | | | | | | | |
| **U 5...-120/4** | **U 5...-120/4T** | 1,2 | 0,9 | 1,09 | 1,09 | 4,9 | 2,4 | 45,5 | 42,2 | 40,7 | 37,2 | 32,9 | 27,4 | 19,8 | 10,4 |
| **U 5...-150/5** | **U 5...-150/5T** | 1,5 | 1,1 | 1,4 | 1,3 | 6,6 | 3,1 | 55,9 | 52,8 | 51,4 | 48,1 | 43,4 | 37,3 | 28,3 | 16,4 |
| **U 5...-180/6** | **U 5...-180/6T** | 2 | 1,5 | 1,6 | 1,6 | 7,4 | 3,3 | 67,0 | 63,3 | 61,6 | 57,6 | 51,9 | 44,2 | 33,6 | 20,4 |
| **U 5...-200/7** | **U 5...-200/7T** | 2 | 1,5 | 1,9 | 1,8 | 8,6 | 3,6 | 77,8 | 73,5 | 71,3 | 66,3 | 59,6 | 50,7 | 38,0 | 22,4 |
| **U 5...-250/8** | **U 5...-250/8T** | 2,5 | 1,85 | 2,2 | 2,1 | 9,9 | 4,1 | 89,2 | 83,9 | 81,6 | 76,2 | 68,4 | 58,3 | 43,2 | 24,6 |
| **U 5...-280/9** | **U 5...-280/9T** | 2,5 | 1,85 | 2,4 | 2,3 | 10,9 | 4,3 | 99,7 | 93,7 | 90,9 | 84,1 | 75,2 | 64,1 | 47,4 | 25,9 |
| **U 5...-300/10** | **U 5...-300/10T** | 3 | 2,2 | 2,7 | 2,6 | 12,5 | 4,9 | 112,2 | 105,4 | 102,4 | 95,3 | 85,6 | 72,6 | 54,8 | 31,0 |
| **U 5...-350/11** | **U 5...-350/11T** | 3,5 | 2,57 | 3,0 | 2,9 | 13,7 | 5,3 | 125,1 | 117,6 | 114,3 | 106,1 | 95,5 | 80,9 | 60,9 | 34,8 |
| **-** | **U 5...-380/12T** | 4 | 3 | - | 3,2 | - | 6,0 | 135,7 | 128,9 | 125,6 | 117,7 | 106,3 | 91,3 | 70,2 | 41,5 |

| TYPE - 50 Hz | | P2 | | P1 | | CURRENT | | Q (m³/h - l/min) | | | | | | |
|---|---|---|---|---|---|---|---|---|---|---|---|---|---|---|
| 1~ | 3~ | | | 1~ | 3~ | 1~ 230V | 3~ 400V | 0 | 2,4 | 3,6 | 4,8 | 6 | 7,2 | 9,6 |
| | | | | | | | | 0 | 40 | 60 | 80 | 100 | 120 | 160 |
| | | HP | kW | kW | | A | | H (m) | | | | | | |
| **U 7...-180/4** | **U 7...-180/4T** | 2 | 1,5 | 1,8 | 1,7 | 8,3 | 3,5 | 46,7 | 46,0 | 45,2 | 43,1 | 40,3 | 36,9 | 25,5 |
| **U 7...-250/5** | **U 7...-250/5T** | 2,5 | 1,85 | 2,2 | 2,1 | 9,9 | 4,0 | 58,5 | 57,6 | 56,6 | 54,1 | 50,8 | 46,1 | 31,8 |
| **U 7...-300/6** | **U 7...-300/6T** | 3 | 2,2 | 2,6 | 2,5 | 12,1 | 4,8 | 70,6 | 69,9 | 68,7 | 65,8 | 61,8 | 56,6 | 39,3 |
| **-** | **U 7...-350/7T** | 3,5 | 2,57 | - | 2,9 | - | 5,3 | 82,8 | 82,0 | 80,6 | 77,2 | 72,3 | 66,0 | 46,4 |
| **-** | **U 7...-400/8T** | 4 | 3 | - | 3,3 | - | 6,1 | 94,8 | 94,3 | 92,5 | 88,6 | 83,2 | 76,4 | 52,6 |
| **-** | **U 7...-450/9T** | 4,5 | 3,37 | - | 3,7 | - | 6,7 | 107,4 | 106,9 | 105,2 | 101,1 | 95,3 | 87,7 | 61,0 |
| **-** | **U 7...-550/10T** | 5,5 | 4 | - | 4,1 | - | 7,9 | 119,8 | 119,6 | 118,4 | 113,9 | 107,7 | 99,4 | 70,4 |

| TYPE - 50 Hz | | P2 | | P1 | | CURRENT | | Q (m³/h - l/min) | | | | | | | |
|---|---|---|---|---|---|---|---|---|---|---|---|---|---|---|---|
| 1~ | 3~ | | | 1~ | 3~ | 1~ 230V | 3~ 400V | 0 | 3,6 | 4,8 | 6 | 7,2 | 9,6 | 12 | 13,2 |
| | | | | | | | | 0 | 60 | 80 | 100 | 120 | 160 | 200 | 220 |
| | | HP | kW | kW | | A | | H (m) | | | | | | | |
| **U 9...-200/4** | **U 9...-200/4T** | 2 | 1,5 | 1,8 | 1,8 | 8,3 | 3,6 | 45,8 | 42,7 | 41,5 | 39,7 | 37,8 | 32,7 | 24,6 | 19,8 |
| **U 9...-250/5** | **U 9...-250/5T** | 2,5 | 1,85 | 2,3 | 2,2 | 10,4 | 4,2 | 57,1 | 53,1 | 51,6 | 49,5 | 47,2 | 40,6 | 30,2 | 24,4 |
| **U 9...-300/6** | **U 9...-300/6T** | 3 | 2,2 | 2,8 | 2,6 | 12,8 | 5,0 | 69,4 | 64,7 | 63,0 | 60,3 | 57,3 | 49,8 | 36,2 | 28,1 |
| **-** | **U 9...-400/7T** | 4 | 3 | - | 3,1 | - | 5,9 | 82,0 | 77,2 | 74,9 | 72,0 | 68,7 | 59,9 | 44,2 | 33,9 |
| **-** | **U 9...-450/8T** | 4,5 | 3,37 | - | 3,6 | - | 6,5 | 93,5 | 88,5 | 86,3 | 82,6 | 79,0 | 69,5 | 52,0 | 41,7 |
| **-** | **U 9...-500/9T** | 4,5 | 3,37 | - | 4 | - | 7 | 105,4 | 99,1 | 96,5 | 92,5 | 88,3 | 77,3 | 57,5 | 46,9 |
| **-** | **U 9...-550/10T** | 5,5 | 4 | - | 4,4 | - | 8,2 | 117,6 | 111,2 | 108,7 | 104,5 | 99,9 | 87,8 | 66,2 | 53,4 |

| TYPE - 50 Hz | P2 | | P1 | CURRENT | Q (m³/h - l/min) | | | | | | | | | |
|---|---|---|---|---|---|---|---|---|---|---|---|---|---|---|
| 3~ | | | | 3~ 400V | 0 | 6 | 7,2 | 9,6 | 12 | 14,4 | 16,8 | 19,2 | 21,6 | 24 |
| | | | | | 0 | 100 | 120 | 160 | 200 | 240 | 280 | 320 | 360 | 400 |
| | HP | kW | kW | A | | | | | | | | | | |
| **U 18...-250/3T** | 2,5 | 1,85 | 2,3 | 4,3 | 33,8 | 31,6 | 31,0 | 29,4 | 27,4 | 25,4 | 23,2 | 20,4 | 16,3 | 11,5 |
| **U 18...-400/4T** | 4 | 3 | 3,1 | 5,9 | 46,3 | 44,2 | 43,4 | 41,4 | 39,1 | 36,7 | 34,1 | 30,8 | 25,6 | 19,0 |
| **U 18...-450/5T** | 4,5 | 3,37 | 3,9 | 6,9 | 58,1 | 55,7 | 54,6 | 52,1 | 49,3 | 46,3 | 42,9 | 38,7 | 32,2 | 24,0 |
| **U 18...-550/6T** | 5,5 | 4 | 4,7 | 8,5 | 70,1 | 67,4 | 66,3 | 63,4 | 60,0 | 56,4 | 52,4 | 47,6 | 39,6 | 29,9 |
| **U 18...-750/8T** | 7,5 | 5,5 | 6,2 | 11,2 | 94,2 | 90,6 | 89,1 | 85,3 | 80,9 | 76,2 | 71,1 | 65,0 | 54,6 | 41,4 |
| **U 18...-900/9T** | 10 | 7,5 | 7 | 12,9 | 106,4 | 102,8 | 101,3 | 97,2 | 92,4 | 87,3 | 81,6 | 75,0 | 63,5 | 48,5 |

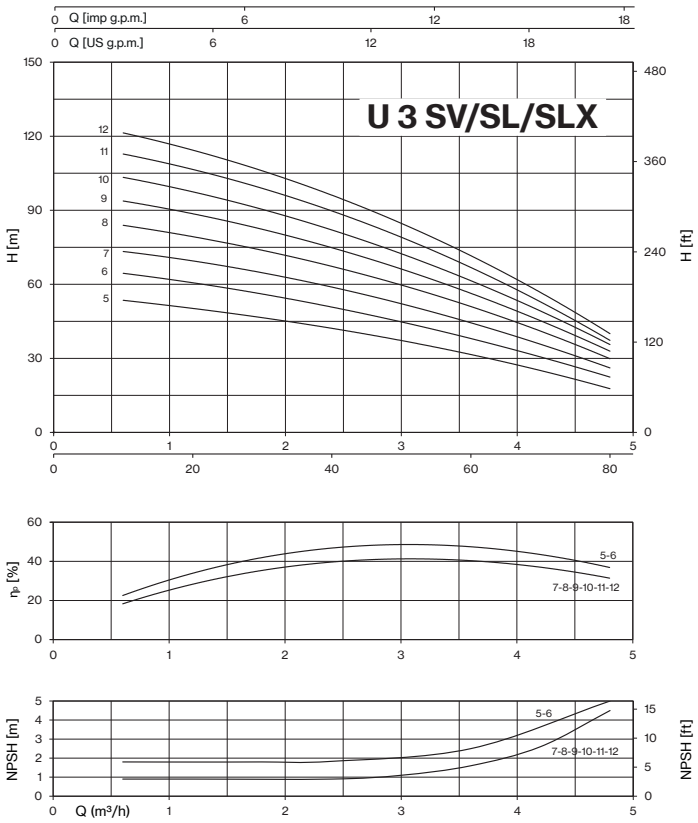
U 3 SV/SL/SLX
Q [imp g.p.m.]
Q [US g.p.m.]
H [m]
H [ft]
12
11
10
9
8
7
6
5
ηp [%]
5-6
7-8-9-10-11-12
NPSH [m]
NPSH [ft]
Q (m³/h)

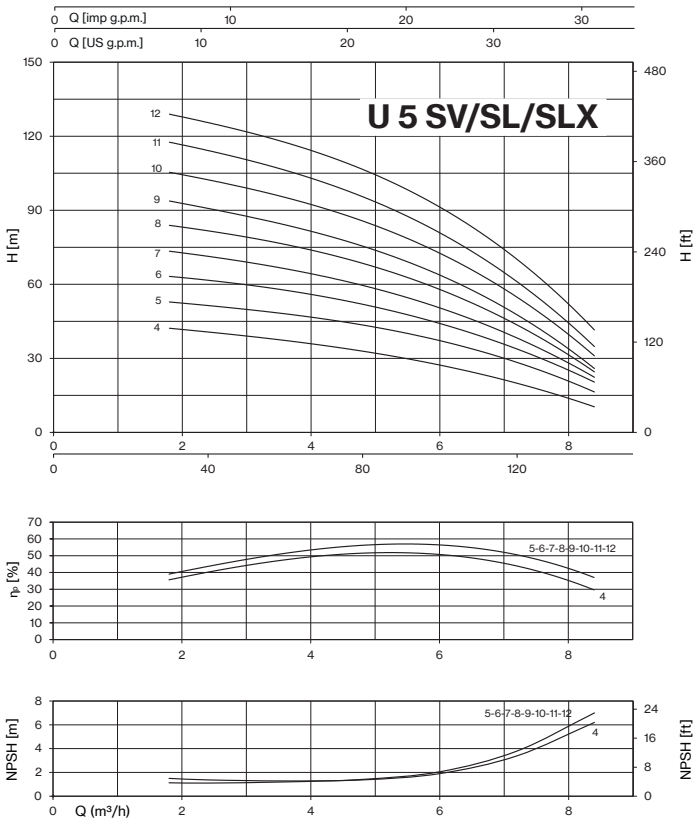
U 5 SV/SL/SLX
Q [imp g.p.m.]
Q [US g.p.m.]
H [m]
H [ft]
12
11
10
9
8
7
6
5
4
ηp [%]
5-6-7-8-9-10-11-12
4
NPSH [m]
NPSH [ft]
Q (m³/h)

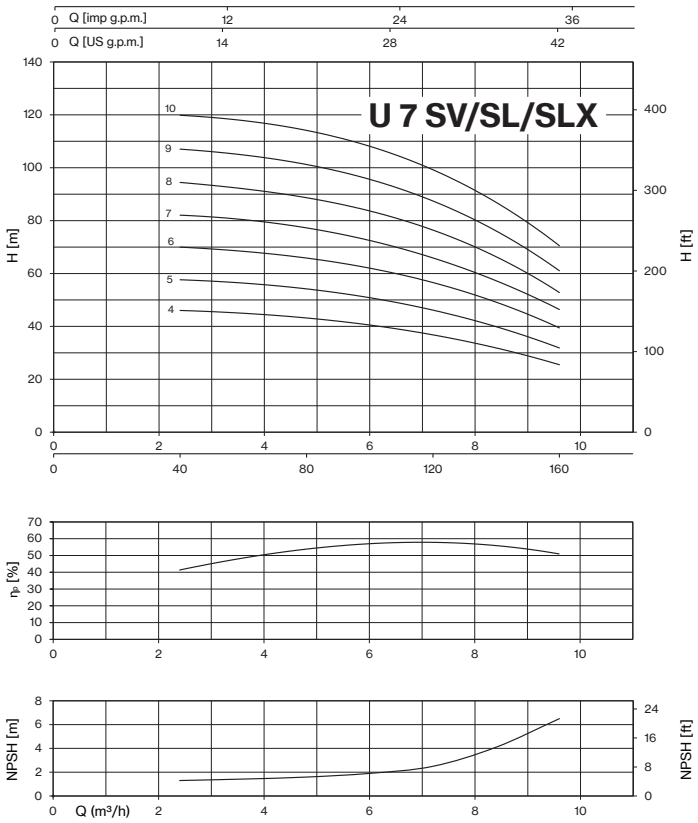
U 7 SV/SL/SLX
Q [imp g.p.m.]
Q [US g.p.m.]
H [m]
H [ft]
10
9
8
7
6
5
4
ηp [%]
NPSH [m]
NPSH [ft]
Q (m³/h)

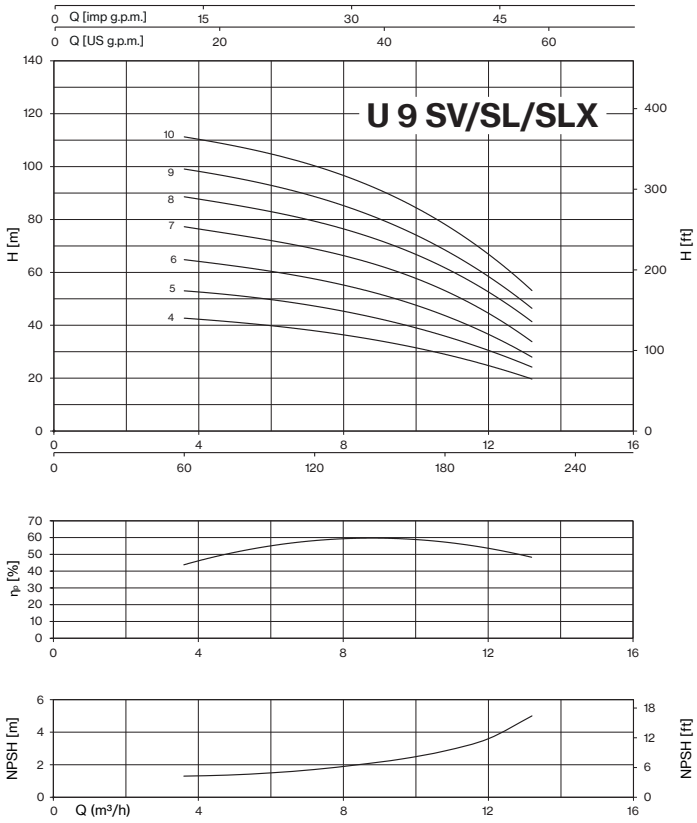
U 9 SV/SL/SLX
Q [imp g.p.m.]
Q [US g.p.m.]
H [m]
H [ft]
10
9
8
7
6
5
4
ηp [%]
NPSH [m]
NPSH [ft]
Q (m³/h)

# ULTRA SV/SL/SLX

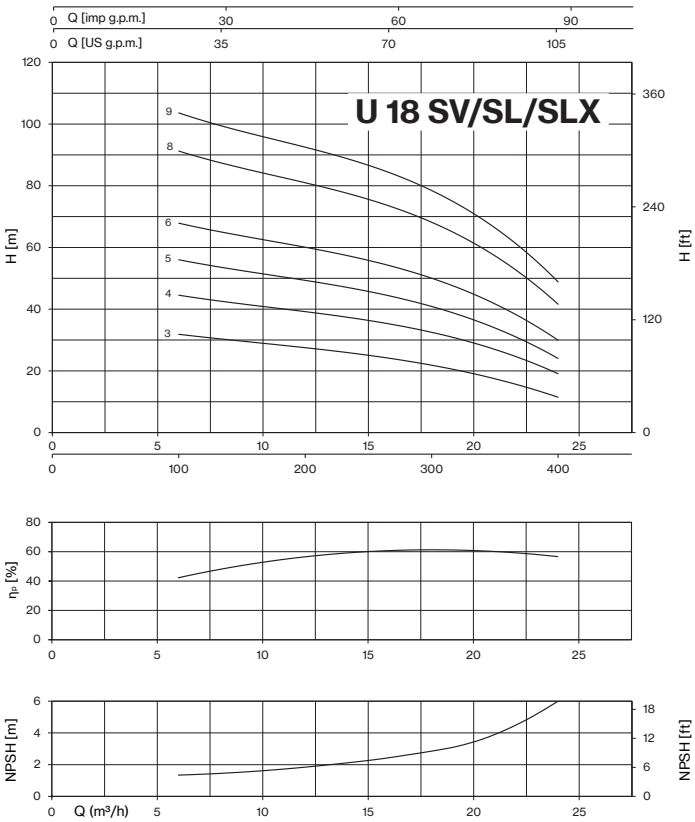

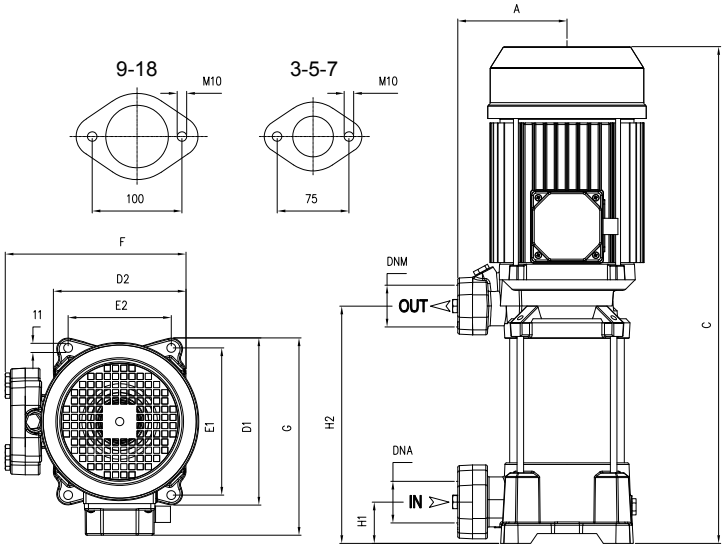


| TYPE | | DIMENSIONS (mm) | | | | | | | | | | | | | | | Kg | |
|---|---|---|---|---|---|---|---|---|---|---|---|---|---|---|---|---|---|---|
| ~1 | ~3 | A | C | D1 | D2 | E1 | E2 | F | G | H1 | H2 | DNA | DNM | I | L | M | ~1 | ~3 |
| **U 3SV-100/5** | **U 3SV-100/5T** | 135 | 413 | 204 | 162 | 178,5 | 125 | 229 | 213 | 40 | 202 | | | 580 | 231 | 235 | 18,5 | 18,5 |
| **U 3SV-120/6** | **U 3SV-120/6T** | 135 | 437 | 204 | 162 | 178,5 | 125 | 229 | 213 | 40 | 226 | | | 580 | 231 | 235 | 19,5 | 19,5 |
| **U 3SV-150/7** | **U 3SV-150/7T** | 135 | 521 | 204 | 162 | 178,5 | 125 | 229 | 220 | 40 | 250 | | | 580 | 231 | 235 | 26,5 | 26,5 |
| **U 3SV-180/8** | **U 3SV-180/8T** | 135 | 545 | 204 | 162 | 178,5 | 125 | 229 | 220 | 40 | 274 | | | 580 | 231 | 235 | 26,5 | 26,5 |
| **U 3SV-200/9** | **U 3SV-200/9T** | 135 | 569 | 204 | 162 | 178,5 | 125 | 229 | 220 | 40 | 298 | 1" ¼ G | 1" ¼ G | 580 | 231 | 235 | 27,5 | 27,5 |
| **U 3SV-250/10** | **U 3SV-250/10T** | 135 | 593 | 204 | 162 | 178,5 | 125 | 229 | 220 | 40 | 322 | | | 650 | 246 | 246 | 28,5 | 28,5 |
| **U 3SV-280/11** | **U 3SV-280/11T** | 135 | 672<br>T 617 | 204 | 162 | 178,5 | 125 | 229 | 228<br>T 220 | 40 | 346 | | | 580 | 231 | 235 | 32 | 29 |
| **U 3SV-300/12** | **U 3SV-300/12T** | 135 | 696<br>T 641 | 204 | 162 | 178,5 | 125 | 229 | 228<br>T 220 | 40 | 370 | | | 779 | 261 | 295 | 32,5 | 28 |
| **U 5SV-120/4** | **U 5SV-120/4T** | 135 | 389 | 204 | 162 | 178,5 | 125 | 229 | 213 | 40 | 178 | | | 580 | 231 | 235 | 18,5 | 18,5 |
| **U 5SV-150/5** | **U 5SV-150/5T** | 135 | 473 | 204 | 162 | 178,5 | 125 | 229 | 220 | 40 | 202 | | | 580 | 231 | 235 | 25,5 | 25,5 |
| **U 5SV-180/6** | **U 5SV-180/6T** | 135 | 497 | 204 | 162 | 178,5 | 125 | 229 | 220 | 40 | 226 | | | 580 | 231 | 235 | 26 | 26 |
| **U 5SV-200/7** | **U 5SV-200/7T** | 135 | 521 | 204 | 162 | 178,5 | 125 | 229 | 220 | 40 | 250 | | | 580 | 231 | 235 | 25,5 | 26,5 |
| **U 5SV-250/8** | **U 5SV-250/8T** | 135 | 545 | 204 | 162 | 178,5 | 125 | 229 | 220 | 40 | 274 | | | 580 | 231 | 235 | 27 | 26 |
| **U 5SV-280/9** | **U 5SV-280/9T** | 135 | 624<br>T 569 | 204 | 162 | 178,5 | 125 | 229 | 228<br>T 220 | 40 | 298 | 1" ¼ G | 1" ¼ G | 650 | 246 | 246 | 31 | 26,5 |
| **U 5SV-300/10** | **U 5SV-300/10T** | 135 | 648<br>T 593 | 204 | 162 | 178,5 | 125 | 229 | 228<br>T 220 | 40 | 322 | | | 779<br>T 650 | 261<br>246 | 295<br>246 | 35,5 | 28 |
| **U 5SV-350/11** | **U 5SV-350/11T** | 135 | 672 | 204 | 162 | 178,5 | 125 | 229 | 228 | 40 | 346 | | | 779 | 261 | 295 | 36 | 33 |
| **-** | **U 5SV-380/12T** | 135 | 696 | 204 | 162 | 178.5 | 125 | 229 | 228 | 40 | 370 | | | 779 | 261 | 295 | - | 35,5 |
| **U 7SV-180/4** | **U 7SV-180/4T** | 135 | 422 | 204 | 162 | 178,5 | 125 | 229 | 220 | 40 | 178 | | | 580 | 231 | 235 | 23,5 | 25 |
| **U 7SV-250/5** | **U 7SV-250/5T** | 135 | 473 | 204 | 162 | 178,5 | 125 | 229 | 220 | 40 | 202 | | | 580 | 231 | 235 | 25 | 24 |
| **U 7SV-300/6** | **U 7SV-300/6T** | 135 | 552<br>T 497 | 204 | 162 | 178,5 | 125 | 229 | 228<br>T 220 | 40 | 226 | | | 580 | 231 | 235 | 32,5 | 26 |
| **-** | **U 7SV-350/7T** | 135 | 575 | 204 | 162 | 178,5 | 125 | 229 | 228 | 40 | 250 | 1" ¼ G | 1" ¼ G | 650 | 246 | 246 | - | 30 |
| **-** | **U 7SV-400/8T** | 135 | 600 | 204 | 162 | 178,5 | 125 | 229 | 228 | 40 | 274 | | | 650 | 246 | 246 | - | 33,5 |
| **-** | **U 7SV-450/9T** | 135 | 653 | 204 | 162 | 178,5 | 125 | 235 | 243 | 40 | 301 | | | 779 | 261 | 295 | - | 39 |
| **-** | **U 7SV-550/10T** | 135 | 676 | 204 | 162 | 178,5 | 125 | 235 | 243 | 40 | 325 | | | 779 | 261 | 295 | - | 44 |
| **U 9SV-200/4** | **U 9SV-200/4T** | 135 | 473 | 204 | 162 | 178,5 | 125 | 229 | 220 | 40 | 202 | | | 580 | 231 | 235 | 24 | 25 |
| **U 9SV-250/5** | **U 9SV-250/5T** | 135 | 503 | 204 | 162 | 178,5 | 125 | 229 | 220 | 40 | 232 | | | 580 | 231 | 235 | 25,5 | 24,5 |
| **U 9SV-300/6** | **U 9SV-300/6T** | 135 | 588<br>T 533 | 204 | 162 | 178,5 | 125 | 229 | 228<br>T 220 | 40 | 262 | | | 580 | 231 | 235 | 33 | 26,5 |
| **-** | **U 9SV-400/7T** | 135 | 617 | 204 | 162 | 178,5 | 125 | 229 | 228 | 40 | 292 | 1" ½ G | 1" ¼ G | 650 | 246 | 246 | - | 33,5 |
| **-** | **U 9SV-450/8T** | 135 | 677 | 204 | 162 | 178,5 | 125 | 235 | 243 | 40 | 325 | | | 779 | 261 | 295 | - | 39 |
| **-** | **U 9SV-500/9T** | 135 | 707 | 204 | 162 | 178,5 | 125 | 235 | 243 | 40 | 355 | | | 779 | 261 | 295 | - | 39,5 |
| **-** | **U 9SV-550/10T** | 135 | 737 | 204 | 162 | 178,5 | 125 | 235 | 243 | 40 | 385 | | | 779 | 261 | 295 | - | 45 |
| **-** | **U 18SV-250/3T** | 135 | 481 | 204 | 162 | 178,5 | 125 | 229 | 220 | 50 | 211 | | | 580 | 231 | 235 | - | 25 |
| **-** | **U 18SV-400/4T** | 135 | 573 | 204 | 162 | 178,5 | 125 | 229 | 228 | 50 | 248 | | | 580 | 231 | 235 | - | 33,5 |
| **-** | **U 18SV-450/5T** | 135 | 640 | 204 | 162 | 178,5 | 125 | 235 | 243 | 50 | 289 | 2" G | 1" ½ G | 779 | 261 | 295 | - | 39,5 |
| **-** | **U 18SV-550/6T** | 135 | 678 | 204 | 162 | 178,5 | 125 | 235 | 243 | 50 | 326 | | | 779 | 261 | 295 | - | 44,5 |
| **-** | **U 18SV-750/8T** | 135 | 815 | 204 | 162 | 178,5 | 125 | 255 | 253 | 50 | 401 | | | 909 | 274 | 303 | - | 55,5 |
| **-** | **U 18SV-900/9T** | 135 | 852 | 204 | 162 | 178,5 | 125 | 255 | 253 | 50 | 439 | | | 909 | 274 | 303 | - | 62 |

# ULTRA SL/SLX

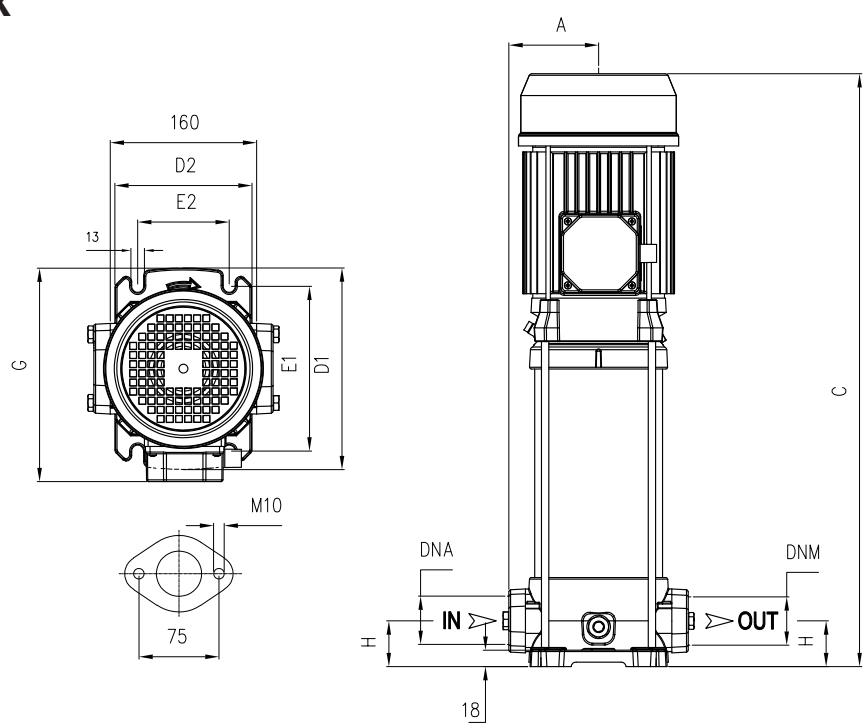


| TYPE | | DIMENSIONS (mm) | | | | | | | | | | | | | Kg | | | |
|---|---|---|---|---|---|---|---|---|---|---|---|---|---|---|---|---|---|---|
| | | | | | | | | | | | | | | | SL | | SLX | |
| ~1 | ~3 | A | C | D1 | D2 | E1 | E2 | G | H | DNA | DNM | I | L | M | ~1 | ~3 | ~1 | ~3 |
| **U 3...-100/5** | **U 3...-100/5T** | 98 | 429 | 220 | 150 | 180 | 100 | 228 | 50 | 1" ¼ G | 1" ¼ G | 580 | 231 | 235 | 19 | 19 | 19 | 19 |
| **U 3...-120/6** | **U 3...-120/6T** | 98 | 453 | 220 | 150 | 180 | 100 | 228 | 50 | | | 580 | 231 | 235 | 21,5 | 21,5 | 20 | 20 |
| **U 3...-150/7** | **U 3...-150/7T** | 98 | 537 | 220 | 150 | 180 | 100 | 228 | 50 | | | 539 | 261 | 280 | 28,5 | 28,5 | 27,5 | 27,5 |
| **U 3...-180/8** | **U 3...-180/8T** | 98 | 561 | 220 | 150 | 180 | 100 | 228 | 50 | | | 580 | 231 | 235 | 28,5 | 28,5 | 27,5 | 27,5 |
| **U 3...-200/9** | **U 3...-200/9T** | 98 | 585 | 220 | 150 | 180 | 100 | 228 | 50 | | | 664 | 261 | 295 | 30,5 | 30,5 | 29 | 29,5 |
| **U 3...-250/10** | **U 3...-250/10T** | 98 | 609 | 220 | 150 | 180 | 100 | 228 | 50 | | | 664 | 261 | 295 | 31,5 | 31,5 | 30,5 | 30,5 |
| **U 3...-280/11** | **U 3...-280/11T** | 98 | 688<br>T 633 | 220 | 150 | 180 | 100 | 236<br>T 228 | 50 | | | 779<br>T 664 | 261 | 295 | 35,5 | 32,5 | 34 | 31 |
| **U 3...-300/12T** | **U 3...-300/12T** | 98 | 712<br>T 657 | 220 | 150 | 180 | 100 | 236<br>T 228 | 50 | | | 779 | 261 | 295 | 36 | 31,5 | 34,5 | 30 |
| **U 5...-120/4** | **U 5...-120/4T** | 98 | 405 | 220 | 150 | 180 | 100 | 221 | 50 | 1" ¼ G | 1" ¼ G | 580 | 231 | 235 | 20 | 20 | 19 | 19 |
| **U 5...-150/5** | **U 5...-150/5T** | 98 | 489 | 220 | 150 | 180 | 100 | 228 | 50 | | | 580 | 231 | 235 | 27,5 | 27,5 | 26,5 | 26,5 |
| **U 5...-180/6** | **U 5...-180/6T** | 98 | 513 | 220 | 150 | 180 | 100 | 228 | 50 | | | 539 | 261 | 280 | 28 | 28 | 26,5 | 27 |
| **U 5...-200/7** | **U 5...-200/7T** | 98 | 537 | 220 | 150 | 180 | 100 | 228 | 50 | | | 539 | 261 | 280 | 27,5 | 28,5 | 26 | 27,5 |
| **U 5...-250/8** | **U 5...-250/8T** | 98 | 561 | 220 | 150 | 180 | 100 | 228 | 50 | | | 280 | 231 | 235 | 29 | 28 | 28 | 27 |
| **U 5...-280/9** | **U 5...-280/9T** | 98 | 640<br>T 585 | 220 | 150 | 180 | 100 | 236<br>T 228 | 50 | | | 664 | 261 | 295 | 34 | 29,5 | 33 | 28,5 |
| **U 5...-300/10** | **U 5...-300/10T** | 98 | 664<br>T 609 | 220 | 150 | 180 | 100 | 236<br>T 228 | 50 | | | 664 | 261 | 295 | 37,5 | 31 | 36,5 | 30 |
| **U 5...-350/11** | **U 5...-350/11T** | 98 | 687 | 220 | 150 | 180 | 100 | 236 | 50 | | | 779 | 261 | 295 | 38,5 | 35,5 | 37 | 34 |
| **-** | **U 5...-380/12T** | 98 | 712 | 220 | 150 | 180 | 100 | 236 | 50 | | | 779 | 261 | 295 | - | 39 | - | 37,5 |
| **U 7...-180/4** | **U 7...-180/4T** | 98 | 465 | 220 | 150 | 180 | 100 | 228 | 50 | 1" ¼ G | 1" ¼ G | 580 | 231 | 235 | 26 | 27 | 24,5 | 26 |
| **U 7...-250/5** | **U 7...-250/5T** | 98 | 489 | 220 | 150 | 180 | 100 | 228 | 50 | | | 580 | 231 | 235 | 27,5 | 26,5 | 26 | 25 |
| **U 7...-300/6** | **U 7...-300/6T** | 98 | 568<br>T 513 | 220 | 150 | 180 | 100 | 236<br>T 228 | 50 | | | 664<br>T 539 | 261 | 295<br>T 280 | 35 | 28 | 34 | 27 |
| **-** | **U 7...-350/7T** | 98 | 590 | 220 | 150 | 180 | 100 | 236 | 50 | | | 664 | 261 | 295 | - | 33 | - | 32 |
| **-** | **U 7...-400/8T** | 98 | 614 | 220 | 150 | 180 | 100 | 236 | 50 | | | 664 | 261 | 295 | - | 36,5 | - | 35,5 |
| **-** | **U 7...-450/9T** | 98 | 668 | 220 | 150 | 180 | 100 | 251 | 50 | | | 779 | 261 | 295 | - | 41 | - | 40 |
| **-** | **U 7...-550/10T** | 98 | 692 | 220 | 150 | 180 | 100 | 251 | 50 | | | 779 | 261 | 295 | - | 46,5 | - | 45 |

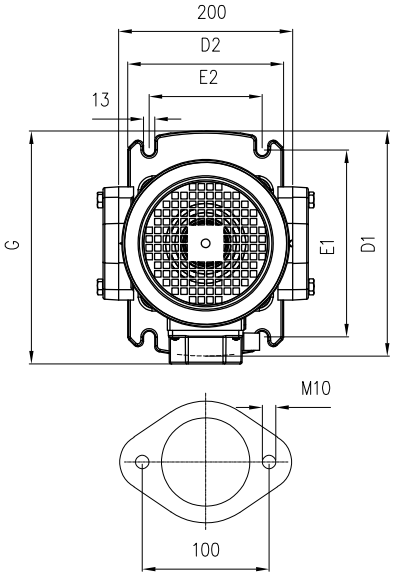


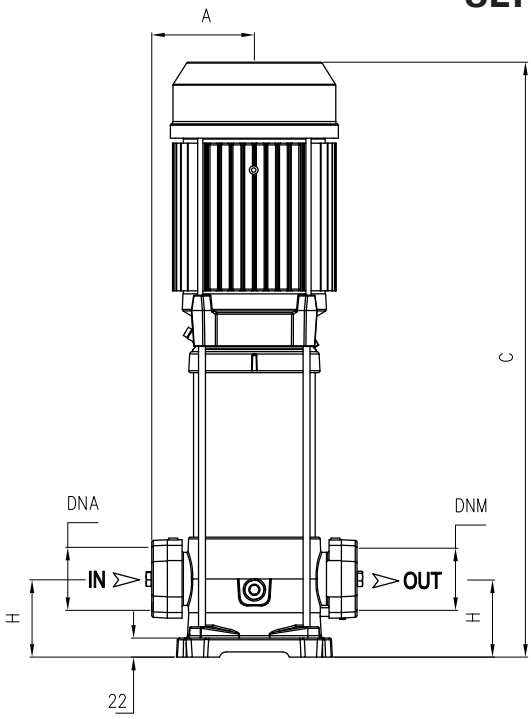


| TYPE | | DIMENSIONS (mm) | | | | | | | | | | | | | Kg | | | |
|---|---|---|---|---|---|---|---|---|---|---|---|---|---|---|---|---|---|---|
| | | | | | | | | | | | | | | | SL | | SLX | |
| ~1 | ~3 | A | C | D1 | D2 | E1 | E2 | G | H | DNA | DNM | I | L | M | ~1 | ~3 | ~1 | ~3 |
| **U 9...-200/4** | **U 9...-200/4T** | 118 | 520 | 260 | 180 | 215 | 130 | 248 | 80 | 1" ½ G | 1" ½ G | 539 | 261 | 280 | 30 | 31 | 28,5 | 29,5 |
| **U 9...-250/5** | **U 9...-250/5T** | 118 | 550 | 260 | 180 | 215 | 130 | 248 | 80 | | | 664 | 261 | 295 | 32 | 31 | 30,5 | 29,5 |
| **U 9...-300/6** | **U 9...-300/6T** | 118 | 635<br>T 580 | 260 | 180 | 215 | 130 | 256<br>T 248 | 80 | | | 664 | 261 | 295 | 39,5 | 33 | 38 | 31,5 |
| **-** | **U 9...-400/7T** | 118 | 663 | 260 | 180 | 215 | 130 | 256 | 80 | | | 779 | 261 | 295 | - | 40 | - | 38,5 |
| **-** | **U 9...-450/8T** | 118 | 723 | 260 | 180 | 215 | 130 | 271 | 80 | | | 779 | 261 | 295 | - | 45 | - | 43,5 |
| **-** | **U 9...-500/9T** | 118 | 763 | 260 | 180 | 215 | 130 | 271 | 80 | | | 779 | 261 | 295 | - | 45,5 | - | 44 |
| **-** | **U 9...-550/10T** | 118 | 783 | 260 | 180 | 215 | 130 | 271 | 80 | | | 909 | 274 | 303 | - | 51 | - | 49 |
| **-** | **U 18...-250/3T** | 118 | 482 | 260 | 180 | 215 | 130 | 251 | 90 | 2" G | 2" G | 664 | 261 | 295 | - | 30,5 | - | 29,5 |
| **-** | **U 18...-400/4T** | 118 | 603 | 260 | 180 | 215 | 130 | 257 | 90 | | | 664 | 261 | 295 | - | 39 | - | 37,5 |
| **-** | **U 18...-450/5T** | 118 | 680 | 260 | 180 | 215 | 130 | 271 | 90 | | | 779 | 261 | 295 | - | 44,5 | - | 43 |
| **-** | **U 18...-550/6T** | 118 | 718 | 260 | 180 | 215 | 130 | 271 | 90 | | | 779 | 261 | 295 | - | 49,5 | - | 48 |
| **-** | **U 18...-750/8T** | 118 | 855 | 260 | 180 | 215 | 130 | 280 | 90 | | | 909 | 274 | 303 | - | 60 | - | 58,5 |
| **-** | **U 18...-900/9T** | 118 | 893 | 260 | 180 | 215 | 130 | 280 | 90 | | | 909 | 274 | 303 | - | 66,5 | - | 65 |

| LOTS | | | | |
|---|---|---|---|---|
| MODEL | TRUCK | | CONTAINER | |
| | PALLET (cm) | N° pumps | PALLET (cm) | N° pumps |
| **U 3SV-100/5(T)÷200/9(T)** | 80×120×150 | 42 | 80×120×175 | 49 |
| **U 3SV-250/10(T)÷300/12(T)** | 80×120×155 | 30 | 80×120×180 | 35 |
| **U 5SV-120/4(T)÷250/8(T)** | 80×120×150 | 42 | 80×120×175 | 49 |
| **U 5SV-280/9(T)** | 80×120×155 | 30 | 80×120×180 | 35 |
| **U 5SV-300/10** | 85×110×125 | 20 | 85×110×150 | 24 |
| **U 5SV-300/10T** | 80×120×155 | 30 | 80×120×180 | 35 |
| **U 5SV-350/11(T)÷380/12T** | 85×110×125 | 20 | 85×110×150 | 24 |
| **U 7SV-180/4(T)÷300/6(T)** | 80×120×150 | 42 | 80×120×175 | 49 |
| **U 7SV-350/7T** | 80×120×155 | 30 | 80×120×175 | 35 |
| **U 7SV-400/8T** | 80×120×155 | 30 | 80×120×180 | 35 |
| **U 7SV-450/9T÷550/10T** | 85×110×125 | 20 | 85×110×150 | 24 |
| **U 9SV-200/4(T)÷300/6(T)** | 80×120×150 | 42 | 80×120×175 | 49 |
| **U 9SV-400/7T** | 80×120×155 | 30 | 80×120×180 | 35 |
| **U 9SV-450/8T÷550/10T** | 85×110×125 | 20 | 85×110×150 | 24 |
| **U 18SV-250/3T÷400/4T** | 80×120×150 | 42 | 80×120×175 | 49 |
| **U 18SV-450/5T÷550/6T** | 85×110×125 | 20 | 85×110×150 | 24 |
| **U 18SV-750/8T÷900/9T** | 92×120×135 | 20 | 85×110×165 | 24 |

| LOTS | | | | |
|---|---|---|---|---|
| MODEL | TRUCK | | CONTAINER | |
| | PALLET (cm) | N° pumps | PALLET (cm) | N° pumps |
| **U 3SL-100/5(T)÷180/8(T)** | 85×110×150 | 42 | 85×110×175 | 49 |
| **U 3SL-200/9(T)÷250/10(T)** | 80×120×150 | 30 | 80×120×170 | 35 |
| **U 3SL-280/11(T)÷300/12(T)** | 85×110×125 | 20 | 85×110×150 | 24 |
| **U 5SL-120/4(T)÷250/8(T)** | 85×110×150 | 42 | 85×110×175 | 49 |
| **U 5SL-280/9(T)** | 80×120×150 | 30 | 80×120×170 | 35 |
| **U 5SL-300/10** | 85×110×125 | 20 | 85×110×150 | 24 |
| **U 5SL-300/10(T)** | 80×120×150 | 30 | 80×120×170 | 35 |
| **U 5SL-350/11(T)÷380/12T** | 85×110×125 | 20 | 85×110×150 | 24 |
| **U 7SL-180/4T÷250/5T** | 85×110×150 | 42 | 85×110×175 | 49 |
| **U 7SL-300/6T÷400/8T** | 80×120×150 | 30 | 80×120×170 | 35 |
| **U 7SL-450/9T÷550/10T** | 85×110×125 | 20 | 85×110×150 | 24 |
| **U 9SL-200/4(T)÷400/7(T)** | 80×120×155 | 25 | 80×120×185 | 30 |
| **U 9SL-450/8T÷550/10T** | 85×110×125 | 20 | 85×110×150 | 24 |
| **U 18SL-250/3T÷400/4T** | 80×120×155 | 25 | 80×120×185 | 30 |
| **U 18SL-450/5T÷550/6T** | 85×110×125 | 20 | 85×110×150 | 24 |
| **U 18SL-750/8T÷900/9T** | 85×110×135 | 20 | 85×110×165 | 24 |

# ULTRA SLG/SLXG

## Multistage Vertical

ULTRA 3-5-7-9 SLG

ULTRA 3-5-7 SLXG

ULTRA 9 SLXG

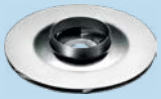

Stainless steel multistage vertical pumps. For non-loaded clean fluids, pressurizing system, irrigation, drinking and glycol water, water treatment, food industry, heating and air conditioning, washing system.

### Construction features

| | |
|---|---|
| **Pump body** | cast iron (SLG); stainless steel AISI 304 (SLXG) |
| **Motor bracket** | cast iron |
| **Impellers, diffusers, shell, motor shaft** | stainless steel AISI 304 |
| **Mechanical seal** | graphite-tungsten carbide-EPDM |
| **Intermediate shaft guiding stage bush** | ceramic-tungsten carbide |
| **Ambient temperature** | max 40 °C |
| **Liquid temperature** | -15 ÷ +110 °C |
| **Max operating pressure** | 25 bar |
| **Pump body gasket** | EPDM |

### Motor

| | |
|---|---|
| **2 poles induction motor** | 3~ 230/400V - 50Hz P ⩽ 4kW<br>3~ 400/690V - 50Hz P > 4kW |
| **Insulation class** | F |
| **Protection degree** | IPX5 |

| LOTS | | | | |
|---|---|---|---|---|
| MODEL | TRUCK | | CONTAINER | |
| | PALLET (cm) | N° pumps | PALLET (cm) | N° pumps |
| **U 3SLG/SLXG-350/14T-380/16T** | 100×120×150 | 12 | 100×120×150 | 12 |
| **U 3SLG/SLXG-400/18T-450/20T** | 100×135×150 | 12 | 100×135×150 | 12 |
| **U 5SLG/SLXG-400/14T-450/16T** | 100×120×150 | 12 | 100×120×150 | 12 |
| **U 5SLG/SLXG-550/18T-600/20T** | 100×135×150 | 12 | 100×135×150 | 12 |
| **U 7SLG/SLXG-750/12T-800/14T** | 100×120×150 | 12 | 100×120×150 | 12 |
| **U 7SLG/SLXG-900/16T-1000/20T** | 100×135×150 | 12 | 100×135×150 | 12 |
| **U 9SLG/SLXG-750/12T-800/14T** | 100×120×150 | 12 | 100×120×150 | 12 |
| **U 9SLG/SLXG-900/16T-1000/20T** | 100×135×150 | 12 | 100×135×150 | 12 |

**U 3 S LX G - 350/ 14 T**

- **T** motor 3~
- 14 No. of impellers
- G coupling
- **L** vertical axis, in-line ports
- **LX** vertical axis, in-line ports, stainless steel pump body
- S stainless steel hydraulic part
- 350 nominal flow-rate m³/h
- U 3 pump type

*More details of the mechanical seals are included on page 180*

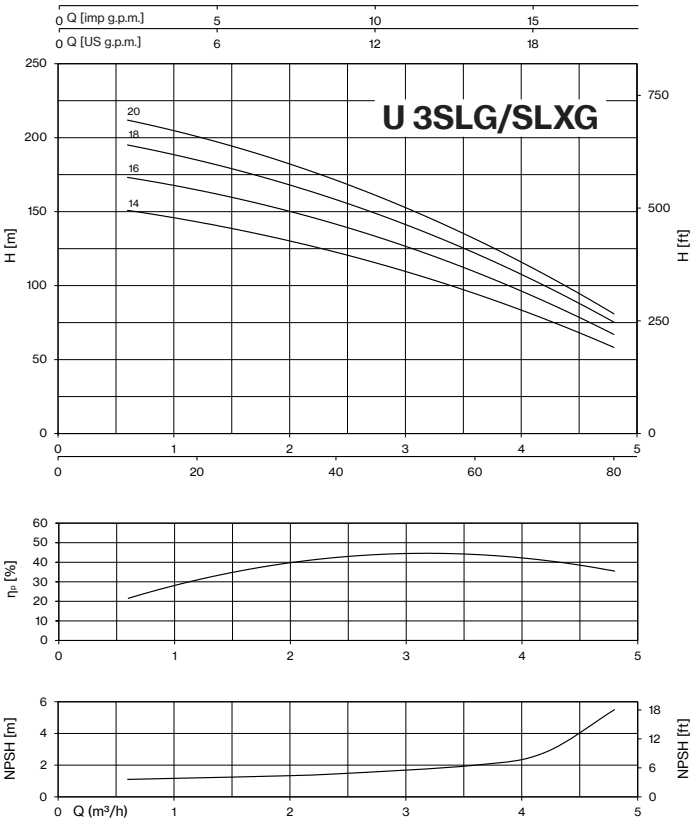


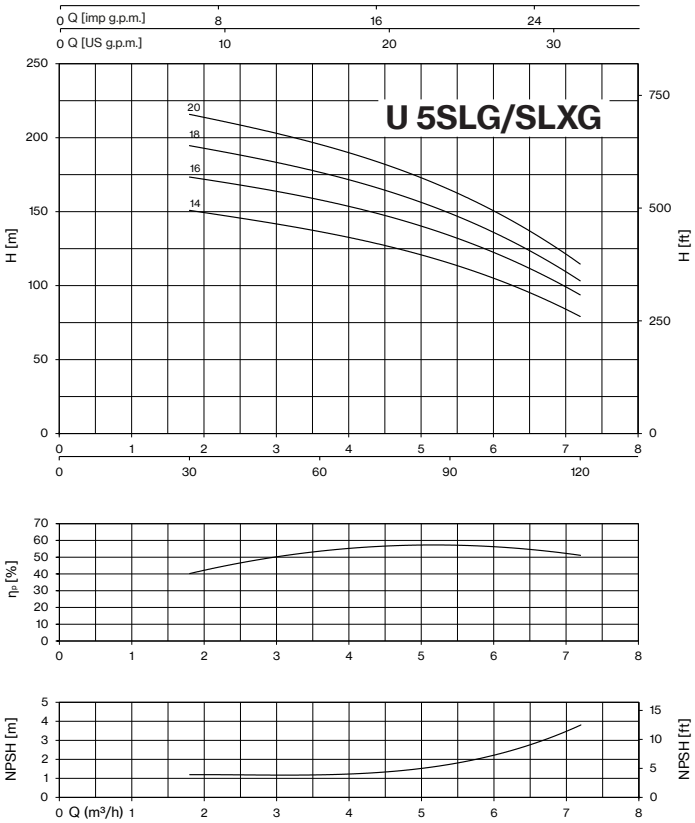


| TYPE - 50 Hz | P2 | | P1 | CURRENT | Q (m³/h - l/min) | | | | | | |
|---|---|---|---|---|---|---|---|---|---|---|---|
| 3~ | | | | 3~ 400V | 0 | 0,6 | 1,2 | 1,8 | 2,4 | 3,6 | 4,8 |
| | | | | | 0 | 10 | 20 | 30 | 40 | 60 | 80 |
| | HP | kW | kW | A | H (m) | | | | | | |
| **U 3... -350/14T** | 3 | 2,2 | 2,5 | 4,7 | 154,8 | 150,9 | 143,2 | 133,7 | 122,5 | 94,7 | 58,2 |
| **U 3...-380/16T** | 4 | 3 | 2,9 | 5,5 | 177,5 | 173,2 | 164,6 | 154,5 | 141,3 | 109,4 | 67,0 |
| **U 3...-400/18T** | 4 | 3 | 3,2 | 6,0 | 200,3 | 195,1 | 184,9 | 172,8 | 158,0 | 122,1 | 75,3 |
| **U 3...-450/20T** | 4 | 3 | 3,6 | 6,5 | 218,3 | 211,9 | 200,6 | 187,4 | 171,4 | 131,5 | 81,0 |

| TYPE - 50 Hz | P2 | | P1 | CURRENT | Q (m³/h - l/min) | | | | | | |
|---|---|---|---|---|---|---|---|---|---|---|---|
| 3~ | | | | 3~ 400V | 0 | 1,8 | 2,4 | 3,6 | 4,8 | 6 | 7,2 |
| | | | | | 0 | 30 | 40 | 60 | 80 | 100 | 120 |
| | HP | kW | kW | A | H (m) | | | | | | |
| **U 5...-400/14T** | 4 | 3 | 3,5 | 6,3 | 159,2 | 150,7 | 146,7 | 136,6 | 122,9 | 105,5 | 79,0 |
| **U 5...-450/16T** | 5,5 | 4 | 4,1 | 7,9 | 182,0 | 173,2 | 169,1 | 158,0 | 142,9 | 122,9 | 93,6 |
| **U 5...-550/18T** | 5,5 | 4 | 4,5 | 8,3 | 204,4 | 194,4 | 189,5 | 176,5 | 159,6 | 136,3 | 103,2 |
| **U 5...-600/20T** | 5,5 | 4 | 5,0 | 8,9 | 226,7 | 215,5 | 210,0 | 195,5 | 176,3 | 151,1 | 114,5 |

# ULTRA SLG/SLXG

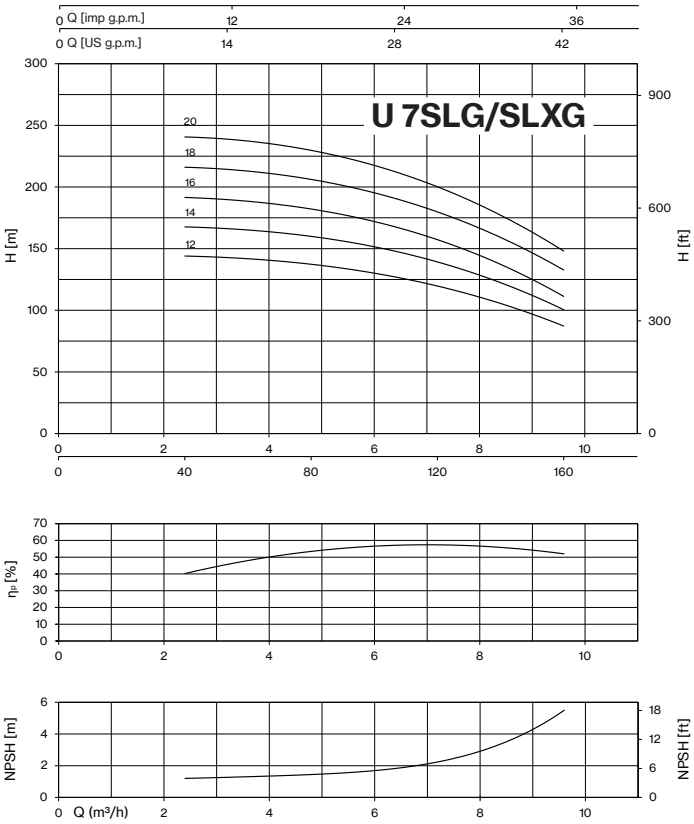


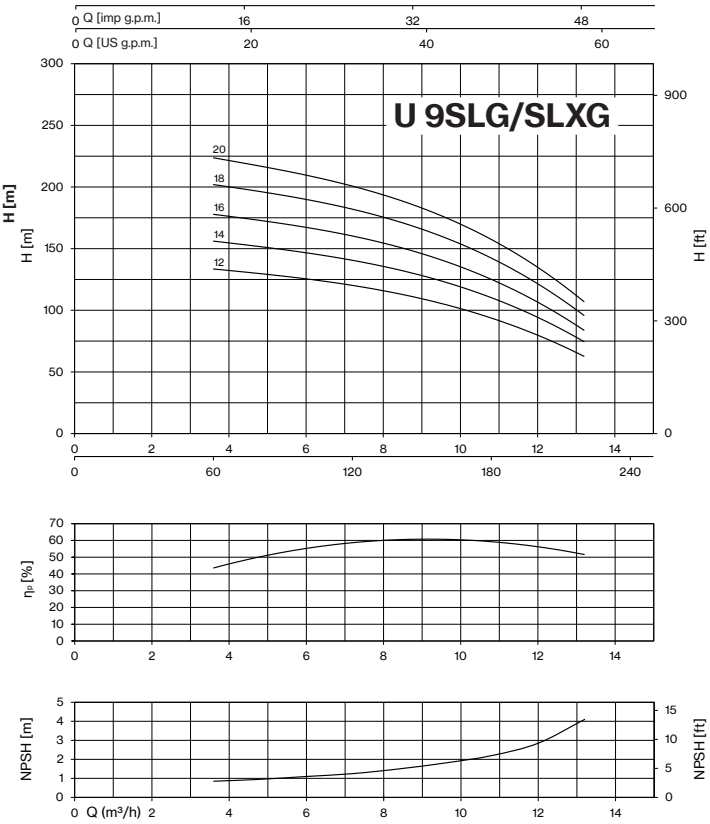


| TYPE - 50 Hz | P2 | | P1 | CURRENT | Q (m³/h - l/min) | | | | | | |
|---|---|---|---|---|---|---|---|---|---|---|---|
| 3~ | | | | 3~ 400V | 0 | 2,4 | 3,6 | 4,8 | 6 | 7,2 | 9,6 |
| | | | | | 0 | 40 | 60 | 80 | 100 | 120 | 160 |
| | HP | kW | kW | A | H (m) | | | | | | |
| **U 7...-750/12T** | 7,5 | 5,5 | 5,1 | 9,9 | 143,7 | 143,7 | 142,6 | 137,0 | 129,6 | 119,8 | 87,0 |
| **U 7...-800/14T** | 7,5 | 5,5 | 5,9 | 10,9 | 167,6 | 167,3 | 165,9 | 159,6 | 151,0 | 139,5 | 100,3 |
| **U 7...-900/16T** | 7,5 | 5,5 | 6,7 | 12,0 | 191,5 | 191,2 | 189,3 | 181,7 | 171,5 | 157,7 | 111,1 |
| **U 7...-950/18T** | 10 | 7,5 | 7,4 | 12,4 | 215,5 | 215,7 | 213,9 | 205,8 | 194,7 | 179,8 | 132,3 |
| **U 7...-1000/20T** | 10 | 7,5 | 8,2 | 13,5 | 240,3 | 240,2 | 238,4 | 229,3 | 216,8 | 200,3 | 147,7 |

| TYPE - 50 Hz | P2 | | P1 | CURRENT | Q (m³/h - l/min) | | | | | | | |
|---|---|---|---|---|---|---|---|---|---|---|---|---|
| 3~ | | | | 3~ 400V | 0 | 3,6 | 4,8 | 6 | 7,2 | 9,6 | 12 | 13,2 |
| | | | | | 0 | 60 | 80 | 100 | 120 | 160 | 200 | 220 |
| | HP | kW | kW | A | H (m) | | | | | | | |
| **U 9...-750/12T** | 7,5 | 5,5 | 5,3 | 10,1 | 141,3 | 133,2 | 130,4 | 125,4 | 119,7 | 105,1 | 79,6 | 62,7 |
| **U 9...-800/14T** | 7,5 | 5,5 | 6,1 | 11,1 | 165,5 | 155,7 | 152,6 | 146,5 | 139,9 | 123,4 | 94,0 | 74,6 |
| **U 9...-900/16T** | 10 | 7,5 | 6,9 | 12,8 | 188,7 | 177,6 | 173,6 | 167,1 | 159,7 | 140,4 | 106,2 | 83,9 |
| **U 9...-950/18T** | 10 | 7,5 | 7,6 | 12,7 | 213,8 | 201,6 | 197,3 | 189,6 | 181,2 | 159,9 | 121,0 | 96,0 |
| **U 9...-1000/20T** | 10 | 7,5 | 8,5 | 13,9 | 236,7 | 223,1 | 218,3 | 209,3 | 199,8 | 176,1 | 134,5 | 107,0 |

## U 3-5-7 SLG/SLXG

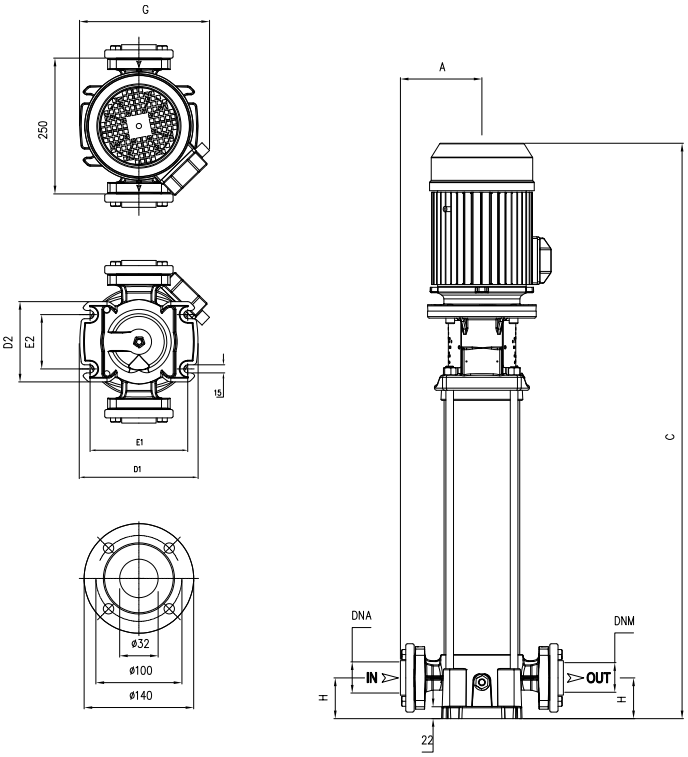


## U 9 SLG/SLXG

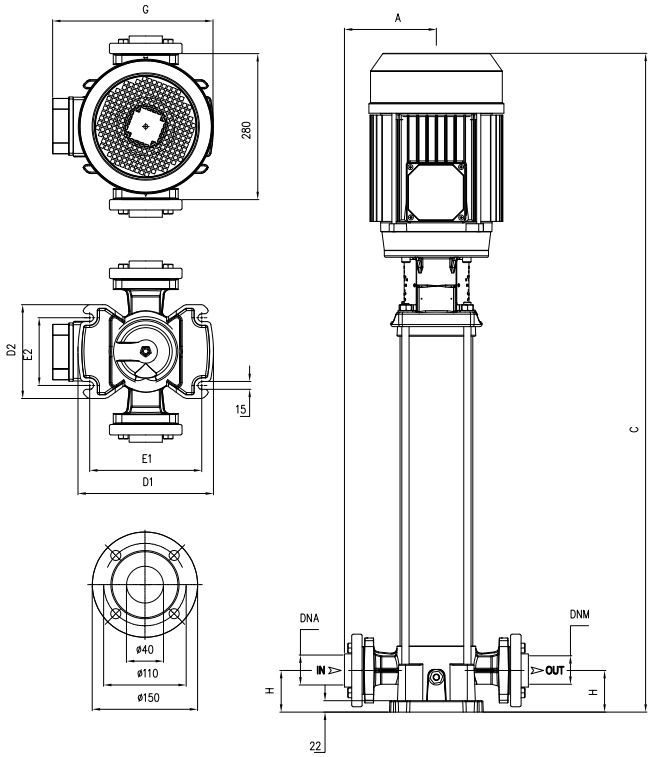


| TYPE | DIMENSIONS (mm) | | | | | | | | | | | | | | |
|---|---|---|---|---|---|---|---|---|---|---|---|---|---|---|---|
| 3~ | A | C | D1 | D2 | E1 | E2 | G | H | DNA | DNM | I | L | M | SLG | SLXG |
| U 3SLG-350/14T | 155 | 932 | 220 | 150 | 180 | 100 | 236 | 75 | 1" ¼ G | 1" ¼ G | 1098 | 327 | 290 | 54 | |
| U 3SLG-380/16T | 155 | 977 | 220 | 150 | 180 | 100 | 236 | 75 | | | 1098 | 327 | 290 | 58,5 | |
| U 3SLG-400/18T | 155 | 1025 | 220 | 150 | 180 | 100 | 236 | 75 | | | 1310 | 325 | 380 | 60,5 | |
| U 3SLG-450/20T | 155 | 1098 | 220 | 150 | 180 | 100 | 251 | 75 | | | 1310 | 325 | 380 | 65,5 | |
| U 3SLXG-350/14T | 155 | 932 | 260 | 180 | 215 | 130 | 236 | 75 | 1" ¼ G | 1" ¼ G | 1098 | 327 | 290 | 53,5 | |
| U 3SLXG-380/16T | 155 | 977 | 260 | 180 | 215 | 130 | 236 | 75 | | | 1098 | 327 | 290 | 58 | |
| U 3SLXG-400/18T | 155 | 1025 | 260 | 180 | 215 | 130 | 236 | 75 | | | 1310 | 325 | 380 | 60,5 | |
| U 3SLXG-450/20T | 155 | 1098 | 260 | 180 | 215 | 130 | 251 | 75 | | | 1310 | 325 | 380 | 64,5 | |
| U 5SLG-400/14T | 155 | 932 | 220 | 150 | 180 | 100 | 251 | 75 | 1" ¼ G | 1" ¼ G | 1098 | 327 | 290 | 57 | |
| U 5SLG-450/16T | 155 | 1000 | 220 | 150 | 180 | 100 | 251 | 75 | | | 1098 | 327 | 290 | 66 | |
| U 5SLG-550/18T | 155 | 1048 | 220 | 150 | 180 | 100 | 251 | 75 | | | 1310 | 325 | 380 | 68 | |
| U 5SLG-600/20T | 155 | 1098 | 220 | 150 | 180 | 100 | 260 | 75 | | | 1310 | 325 | 380 | 70 | |
| U 5SLXG-400/14T | 155 | 932 | 260 | 180 | 215 | 130 | 251 | 75 | 1" ¼ G | 1" ¼ G | 1098 | 327 | 290 | 56,5 | |
| U 5SLXG-450/16T | 155 | 1000 | 260 | 180 | 215 | 130 | 251 | 75 | | | 1098 | 327 | 290 | 65,5 | |
| U 5SLXG-550/18T | 155 | 1048 | 260 | 180 | 215 | 130 | 251 | 75 | | | 1310 | 325 | 380 | 68 | |
| U 5SLXG-600/20T | 155 | 1098 | 260 | 180 | 215 | 130 | 260 | 75 | | | 1310 | 325 | 380 | 69 | |
| U 7SLG-750/12T | 155 | 940 | 220 | 150 | 180 | 100 | 260 | 75 | 1" ¼ G | 1" ¼ G | 1098 | 327 | 290 | 70 | |
| U 7SLG-800/14T | 155 | 988 | 220 | 150 | 180 | 100 | 260 | 75 | | | 1098 | 327 | 290 | 71,5 | |
| U 7SLG-900/16T | 155 | 1036 | 220 | 150 | 180 | 100 | 260 | 75 | | | 1310 | 325 | 380 | 74 | |
| U 7SLG-950/18T | 155 | 1081 | 220 | 150 | 180 | 100 | 288 | 75 | | | 1310 | 325 | 380 | 87,5 | |
| U 7SLG-1000/20T | 155 | 1128 | 220 | 150 | 180 | 100 | 288 | 75 | | | 1310 | 325 | 380 | 87,5 | |
| U 7SLXG-750/12T | 155 | 940 | 260 | 180 | 215 | 130 | 260 | 75 | 1" ¼ G | 1" ¼ G | 1098 | 327 | 290 | 70 | |
| U 7SLXG-800/14T | 155 | 988 | 260 | 180 | 215 | 130 | 260 | 75 | | | 1098 | 327 | 290 | 71,5 | |
| U 7SLXG-900/16T | 155 | 1036 | 260 | 180 | 215 | 130 | 260 | 75 | | | 1310 | 325 | 380 | 73,5 | |
| U 7SLXG-950/18T | 155 | 1081 | 260 | 180 | 215 | 130 | 288 | 75 | | | 1310 | 325 | 380 | 87,5 | |
| U 7SLXG-1000/20T | 155 | 1128 | 260 | 180 | 215 | 130 | 288 | 75 | | | 1310 | 325 | 380 | 88,5 | |
| U 9...-750/12T | 170 | 1027 | 260 | 180 | 215 | 130 | 280 | 80 | 1" ½ G | 1" ½ G | 1310 | 325 | 380 | 74,5 | 73,5 |
| U 9...-800/14T | 170 | 1088 | 260 | 180 | 215 | 130 | 280 | 80 | | | 1310 | 325 | 380 | 76,5 | 75 |
| U 9...-900/16T | 170 | 1147 | 260 | 180 | 215 | 130 | 280 | 80 | | | 1310 | 325 | 380 | 83 | 82 |
| U 9...-950/18T | 170 | 1205 | 260 | 180 | 215 | 130 | 308 | 80 | | | 1310 | 325 | 380 | 91,5 | 91 |
| U 9...-1000/20T | 170 | 1263 | 260 | 180 | 215 | 130 | 308 | 80 | | | 1310 | 325 | 380 | 93,5 | 93 |

# ULTRA V-SV-L-SL-LG-SLG Serie-Mechanical seal and bearings

| MECHANICAL SEAL | PUMP MODEL | SHAFT Ø | | STANDARD MATERIAL | OPTIONAL |
|---|---|---|---|---|---|
| | | | | | 2 |
| | U3-100/5, U3-120/6, U5-120/4, U5-150/5, U5-180/6, U7-180/4, U7-250/5, U7-300/6, U9-200/4, U9-250/5, U18-250/3, U18-400/4 | 14mm / S | ***Rotating face***<br>***Stationary face***<br>***Elastomer*** | Graphite<br>Ceramic<br>EPDM | SiC<br>SiC<br>EPDM |
| | U3-150/7, U3-180/8, U3-200/9, U3-250/10, U3-280/11, U3-300/12, U5-200/7, U5-250/8, U5-280/9, U5-300/10, U5-350/11, U5-380/12, U7-350/7, U7-400/8, U7-450/9, U7-550/10, U9-300/6, U9-400/7, U9-450/8, U9-500/9, U9-550/10 | 14mm | ***Rotating face***<br>***Stationary face***<br>***Elastomer*** | Graphite<br>SiC<br>EPDM | SiC<br>SiC<br>EPDM |
| | U18-450/5, U18-550/6, U18-750/8, U18-900/9, U18-920/10, U18-1000/11 | 14mm / L | ***Rotating face***<br>***Stationary face***<br>***Elastomer*** | Graphite<br>SiC<br>EPDM | SiC<br>SiC<br>EPDM |
| | U3-350/14, U3-380/16, U3-400/18, U3-450/20, U5-400/14, U5-450/16, U5-550/18, U5-600/20, U7-750/12, U7-800/14, U7-900/16, U7-950/18, U7-1000/20, U9-750/12, U9-800/14, U9-900/16, U9-950/18, U9-1000/20 | 14mm / Balanced seal | ***Rotating face***<br>***Stationary face***<br>***Elastomer*** | Tungsten carbide<br>Graphite<br>EPDM | -<br>-<br>- |

| BEARINGS | PUMP MODEL | TYPE | |
|---|---|---|---|
| | U3-100/5, U3-120/6, U5-120/4 | 6202-ZZ | 6302-ZZ C3 |
| | U3-150/7, U3-180/8, U3-200/9, U3-250/10, 3~ U3-280/11, 3~ U3-300/12, U5-150/5, U5-180/6, U5-200/7, U5-250/8, 3~ U5-280/9, 3~ U5-300/10, U7-180/4, U7-250/5, 3~ U7-300/6, U9-200/4, U9-250/5, 3~ U9-300/6, U18-250/3 | 6203-ZZ | 6304-ZZ C3 |
| | 1~ U3-280/11, 1~ U3-300/12, 1~ U5-280/9, 1~ U5-300/10, U5-350/11, U5-380/12, 1~ U7-300/6, U7-350/7, U7-400/8, 1~ U9-300/6, U9-400/7, U18-400/4, U3-350/14, U3-380/16, U3-400/18, U5-400/14 | 6203-ZZ | 6305-ZZ C3 |
| | U7-450/9, U7-550/10, U9-450/8, U9-500/9, U9-550/10, U18-450/5, U18-550/6 | 6204-ZZ | 6306-ZZ-C3 |
| | U3-450/20, U5-450/16, U5-550/18, U5-600/20 | 6204-ZZ | 3206-ZZ C3 |
| | U7-750/12, U7-800/14, U7-900/16, U9-750/12, U9-800/14, U9-900/16, U18-750/8, U18-900/9, U18-920/10 | 6206-ZZ C3 | 3306-ZZ C3 |
| | U7-950/18, U7-1000/20, U9-950/18, U9-1000/20, U18-1000/11 | 6206-ZZ C3 | 3308-ZZ C3 |

# ULTRA HX

## Multistage Vertical

Stainless steel multistage vertical pumps. Suitable for clean non-loaded fluids, pressurizing system, irrigation, drinking and glycol water, water treatment, food industry, heating and air conditioning, washing system.

| Construction features | |
|---|---|
| **Pump body** | EN 1.4401 / AISI 316 |
| **Motor bracket** | cast iron |
| **Impellers, diffusers, shell, pump shaft** | EN 1.4401 / AISI 316 |
| **Mechanical seal** | silicon carbide-graphite-EPDM |
| **Intermediate bush** | tungsten carbide |
| **Ambient temperature** | max 40 °C |
| **Liquid temperature** | -15 ÷ +120 °C<br>(Max 85° for domestic use) |
| **Max operating pressure** | max 26 bar |
| **Pump body gasket** | EPDM |

| Motor | |
|---|---|
| **2 poles induction motor** | 3~ 230/400V - 50Hz P ⩽ 4kW, size B14 V1<br>3~ 400/690V - 50Hz P > 4kW, size B5 V1<br>IE3 efficiency class |
| **Insulation class** | F |
| **Protection degree** | IP55 |

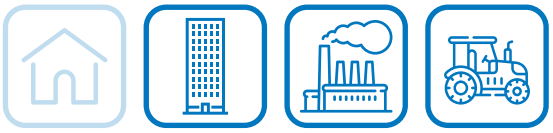

**U 18 H X - 100 / 1 T -2**

- pump type
- nominal flow-rate m³/h
- vertical axis, in-line ports, coupling
- AISI 316 impellers, diffusers and pump body
- nominal power HP×100
- No. of impellers
- motor **T** 3~
- mech. seal and O-rings
  - SiC-Graphite-EPDM
  - **V** SiC-Graphite-FKM
  - **2E** SiC-SiC-EPDM
  - **2V** SiC-SiC-FKM

*More details of the mechanical seals are included on page 199*

# ULTRA 18-22

| TYPE - 50 Hz | P2 | | Q (l/min - m³/h - US gpm) | | | | | | | | | | | |
|---|---|---|---|---|---|---|---|---|---|---|---|---|---|---|
| 3~ | | | 0 | 133,3 | 150 | 166,7 | 183,3 | 200 | 216,7 | 233,3 | 266,7 | 300 | 350 | 400 |
| | | | 0 | 8 | 9 | 10 | 11 | 12 | 13 | 14 | 16 | 18 | 21 | 24 |
| | | | 0 | 35,2 | 39,6 | 44,0 | 48,4 | 52,8 | 57,2 | 61,6 | 70,3 | 79,1 | 92,3 | 105,5 |
| | HP | kW | H (m) | | | | | | | | | | | |
| **U 18HX-100/1T** | 1 | 0,75 | 13,0 | 11,7 | 11,6 | 11,4 | 11,1 | 10,8 | 10,4 | 10,1 | 9,1 | 7,9 | 5,6 | |
| **U 18HX-200/2T** | 2 | 1,5 | 27,1 | 24,3 | 23,9 | 23,5 | 22,9 | 22,3 | 21,7 | 21,1 | 19,3 | 17,2 | 13,1 | 8,0 |
| **U 18HX-300/3T** | 3 | 2,2 | 41,2 | 37,4 | 36,7 | 36,1 | 35,3 | 34,4 | 33,6 | 32,7 | 30,1 | 27,1 | 20,8 | 13,5 |
| **U 18HX-400/4T** | 4 | 3 | 55,1 | 50,2 | 49,3 | 48,5 | 47,5 | 46,3 | 45,2 | 44,0 | 40,6 | 36,6 | 28,2 | 18,5 |
| **U 18HX-550/5T** | 5,5 | 4 | 72,3 | 64,7 | 63,7 | 62,6 | 61,5 | 60,1 | 58,5 | 57,2 | 53,6 | 48,7 | 38,9 | 27,6 |
| **U 18HX-750/6T** | 7,5 | 5,5 | 88,0 | 80,1 | 78,9 | 77,7 | 76,4 | 74,9 | 73,3 | 71,7 | 68,0 | 62,4 | 51,3 | 37,5 |
| **U 18HX-750/7T** | 7,5 | 5,5 | 102,5 | 93,0 | 91,5 | 90,1 | 88,6 | 86,8 | 84,9 | 83,0 | 78,6 | 72,0 | 59,1 | 43,0 |
| **U 18HX-1000/8T** | 10 | 7,5 | 116,9 | 105,9 | 104,2 | 102,6 | 100,8 | 98,8 | 96,5 | 94,4 | 89,3 | 81,7 | 66,9 | 48,5 |
| **U 18HX-1000/9T** | 10 | 7,5 | 131,2 | 118,5 | 116,6 | 114,8 | 112,7 | 110,4 | 107,9 | 105,5 | 99,7 | 91,1 | 74,3 | 53,6 |
| **U 18HX-1500/10T** | 15 | 11 | 147,3 | 134,1 | 132,1 | 130,1 | 127,9 | 125,5 | 122,8 | 120,2 | 114,1 | 104,8 | 86,3 | 63,4 |
| **U 18HX-1500/11T** | 15 | 11 | 161,7 | 147,1 | 144,9 | 142,7 | 140,3 | 137,6 | 134,6 | 131,7 | 125,0 | 114,7 | 94,4 | 69,2 |
| **U 18HX-1500/12T** | 15 | 11 | 176,2 | 160,0 | 157,6 | 155,2 | 152,6 | 149,6 | 146,3 | 143,2 | 135,7 | 124,5 | 102,3 | 74,8 |
| **U 18HX-1500/13T** | 15 | 11 | 190,6 | 172,9 | 170,3 | 167,7 | 164,8 | 161,6 | 158,0 | 154,6 | 146,4 | 134,2 | 110,1 | 80,3 |
| **U 18HX-1500/14T** | 15 | 11 | 204,9 | 185,7 | 182,9 | 180,0 | 176,9 | 173,4 | 169,5 | 165,9 | 157,0 | 143,8 | 117,8 | 85,7 |
| **U 18HX-2000/15T** | 20 | 15 | 220,7 | 200,2 | 197,2 | 194,2 | 190,8 | 187,1 | 183,0 | 179,0 | 169,7 | 155,7 | 127,8 | 93,4 |
| **U 18HX-2000/16T** | 20 | 15 | 235,1 | 213,1 | 209,8 | 206,6 | 203,0 | 199,0 | 194,6 | 190,4 | 180,3 | 165,3 | 135,6 | 98,9 |
| **U 18HX-2000/17T** | 20 | 15 | 249,4 | 225,9 | 222,4 | 219,0 | 215,1 | 210,9 | 206,1 | 201,6 | 190,9 | 174,8 | 143,3 | 104,2 |

| TYPE - 50 Hz | P2 | | Q (l/min - m³/h - US gpm) | | | | | | | | | | | |
|---|---|---|---|---|---|---|---|---|---|---|---|---|---|---|
| 3~ | | | 0 | 166,7 | 183,3 | 200 | 216,7 | 233,3 | 266,7 | 300 | 350 | 400 | 433,3 | 466,7 |
| | | | 0 | 10 | 11 | 12 | 13 | 14 | 16 | 18 | 21 | 24 | 26 | 28 |
| | | | 0 | 44,0 | 48,4 | 52,8 | 57,2 | 61,6 | 70,3 | 79,1 | 92,3 | 105,5 | 114,3 | 123,1 |
| | HP | kW | H (m) | | | | | | | | | | | |
| **U 22HX-200/1T** | 2 | 1,1 | 14,3 | 12,9 | 12,8 | 12,5 | 12,2 | 11,9 | 11,4 | 10,5 | 9,0 | 6,7 | 4,0 | |
| **U 22HX-300/2T** | 3 | 2,2 | 29,7 | 26,9 | 26,6 | 26,3 | 26,0 | 25,5 | 24,5 | 23,3 | 20,7 | 17,1 | 13,9 | 10,6 |
| **U 22HX-400/3T** | 4 | 3 | 45,0 | 40,9 | 40,4 | 39,9 | 39,2 | 38,5 | 37,2 | 35,5 | 31,6 | 25,8 | 21,5 | 16,6 |
| **U 22HX-550/4T** | 5,5 | 4 | 62,2 | 55,7 | 54,9 | 54,2 | 53,7 | 52,8 | 50,9 | 49,0 | 44,0 | 36,8 | 31,1 | 25,2 |
| **U 22HX-750/5T** | 7,5 | 5,5 | 78,6 | 70,8 | 69,9 | 69,0 | 68,5 | 67,4 | 65,1 | 62,8 | 56,9 | 47,9 | 41,0 | 33,5 |
| **U 22HX-1000/6T** | 10 | 7,5 | 94,2 | 86,2 | 85,1 | 84,1 | 83,2 | 82,2 | 79,7 | 77,3 | 70,0 | 59,4 | 51,3 | 42,0 |
| **U 22HX-1000/7T** | 10 | 7,5 | 109,5 | 99,8 | 98,5 | 97,4 | 96,3 | 95,1 | 92,2 | 89,2 | 80,6 | 68,2 | 58,7 | 47,9 |
| **U 22HX-1500/8T** | 15 | 11 | 126,5 | 116,1 | 114,7 | 113,5 | 112,3 | 111,0 | 107,9 | 104,8 | 95,4 | 81,4 | 70,7 | 58,3 |
| **U 22HX-1500/9T** | 15 | 11 | 142,0 | 130,2 | 128,6 | 127,2 | 125,9 | 124,4 | 120,8 | 117,3 | 106,7 | 90,8 | 78,7 | 64,8 |
| **U 22HX-1500/10T** | 15 | 11 | 157,5 | 144,2 | 142,4 | 140,8 | 139,3 | 137,7 | 133,6 | 129,6 | 117,7 | 100,1 | 86,6 | 71,1 |
| **U 22HX-2000/11T** | 20 | 15 | 174,0 | 159,4 | 157,4 | 155,7 | 154,1 | 152,3 | 147,9 | 143,5 | 130,5 | 111,2 | 96,4 | 79,3 |
| **U 22HX-2000/12T** | 20 | 15 | 189,5 | 173,4 | 171,2 | 169,3 | 167,6 | 165,5 | 160,7 | 155,8 | 141,6 | 120,4 | 104,2 | 85,6 |
| **U 22HX-2000/13T** | 20 | 15 | 204,9 | 187,3 | 184,9 | 182,8 | 180,9 | 178,7 | 173,4 | 168,1 | 152,5 | 129,5 | 111,9 | 91,7 |
| **U 22HX-2000/14T** | 20 | 15 | 220,3 | 201,1 | 198,5 | 196,2 | 194,1 | 191,7 | 186,0 | 180,2 | 163,2 | 138,4 | 119,4 | 97,7 |
| **U 22HX-2500/15T** | 25 | 18,5 | 237,4 | 218,1 | 215,4 | 213,1 | 211,0 | 208,6 | 202,6 | 196,8 | 179,4 | 153,1 | 133,0 | 109,7 |
| **U 22HX-2500/16T** | 25 | 18,5 | 252,9 | 232,2 | 229,4 | 226,9 | 224,6 | 222,0 | 215,6 | 209,4 | 190,7 | 162,7 | 141,1 | 116,3 |
| **U 22HX-2500/17T** | 25 | 18,5 | 268,5 | 246,3 | 243,3 | 240,6 | 238,2 | 235,4 | 228,6 | 221,9 | 202,0 | 172,1 | 149,2 | 122,8 |

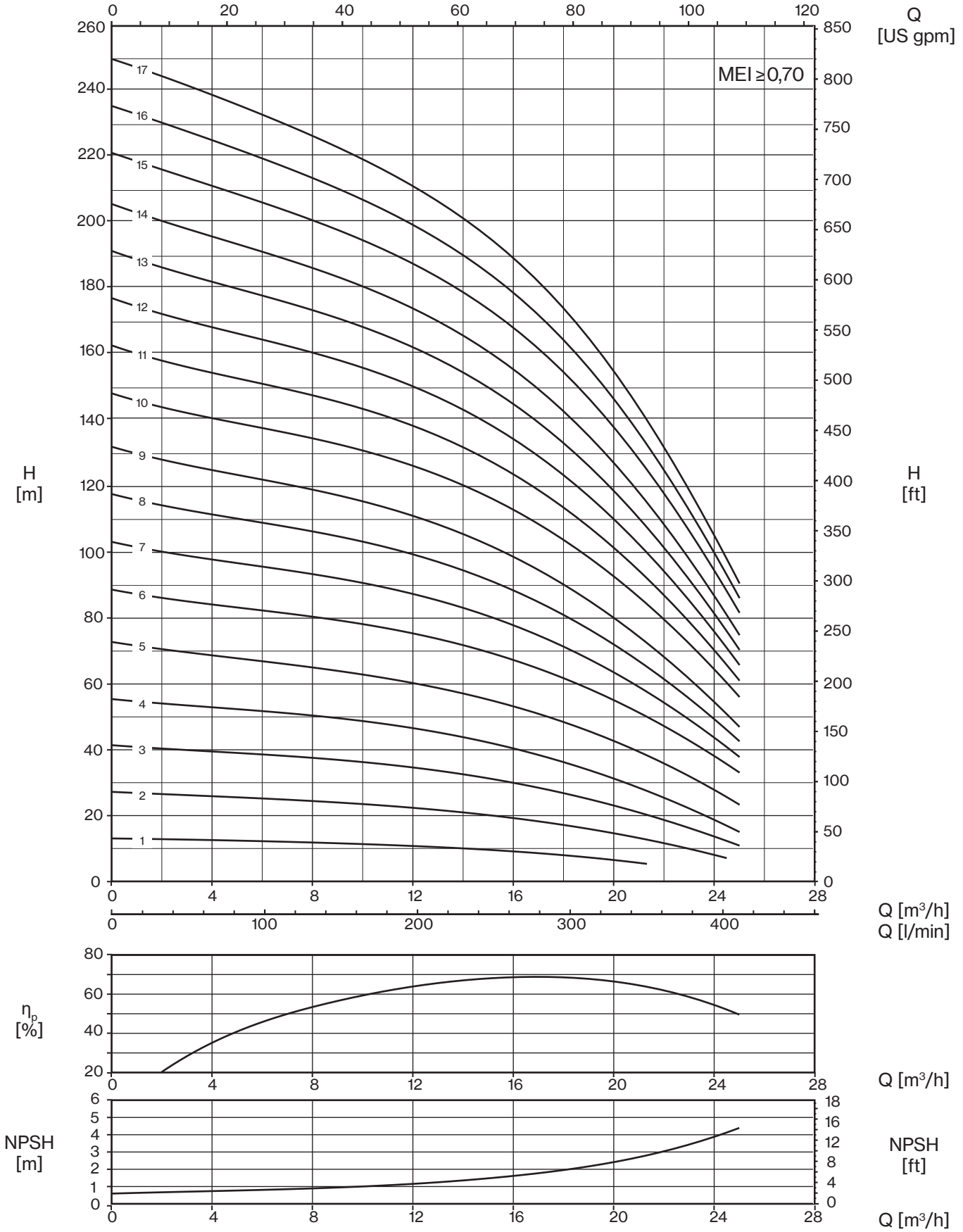
Q
[US gpm]
MEI ≥ 0,70
H
[m]
H
[ft]
Q [m³/h]
Q [l/min]
η_p
[%]
Q [m³/h]
NPSH
[m]
NPSH
[ft]
Q [m³/h]

# 22 HX

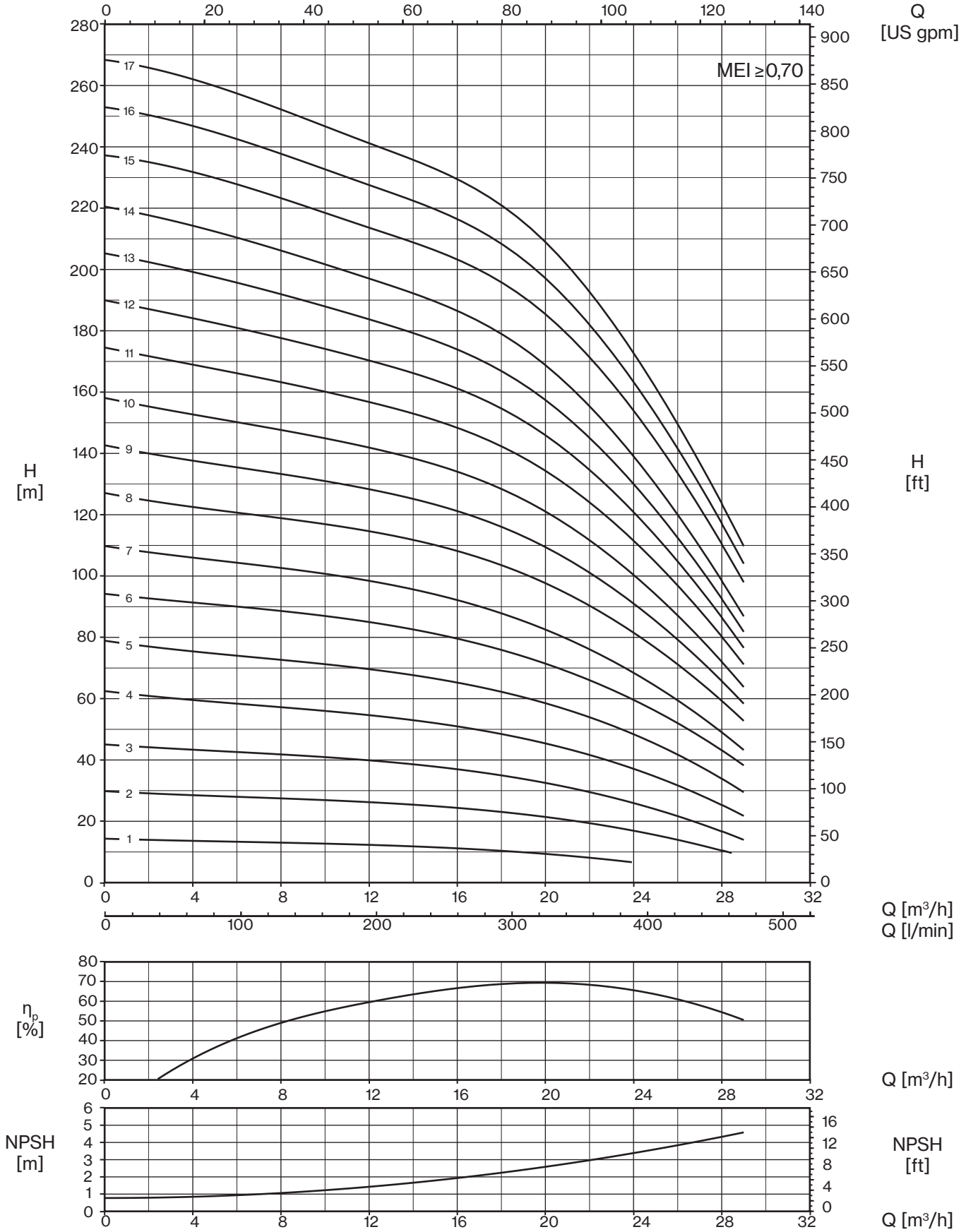




*The hydraulic characteristics are guaranteed, according to ISO Standard 9906:2012, grade 3B*

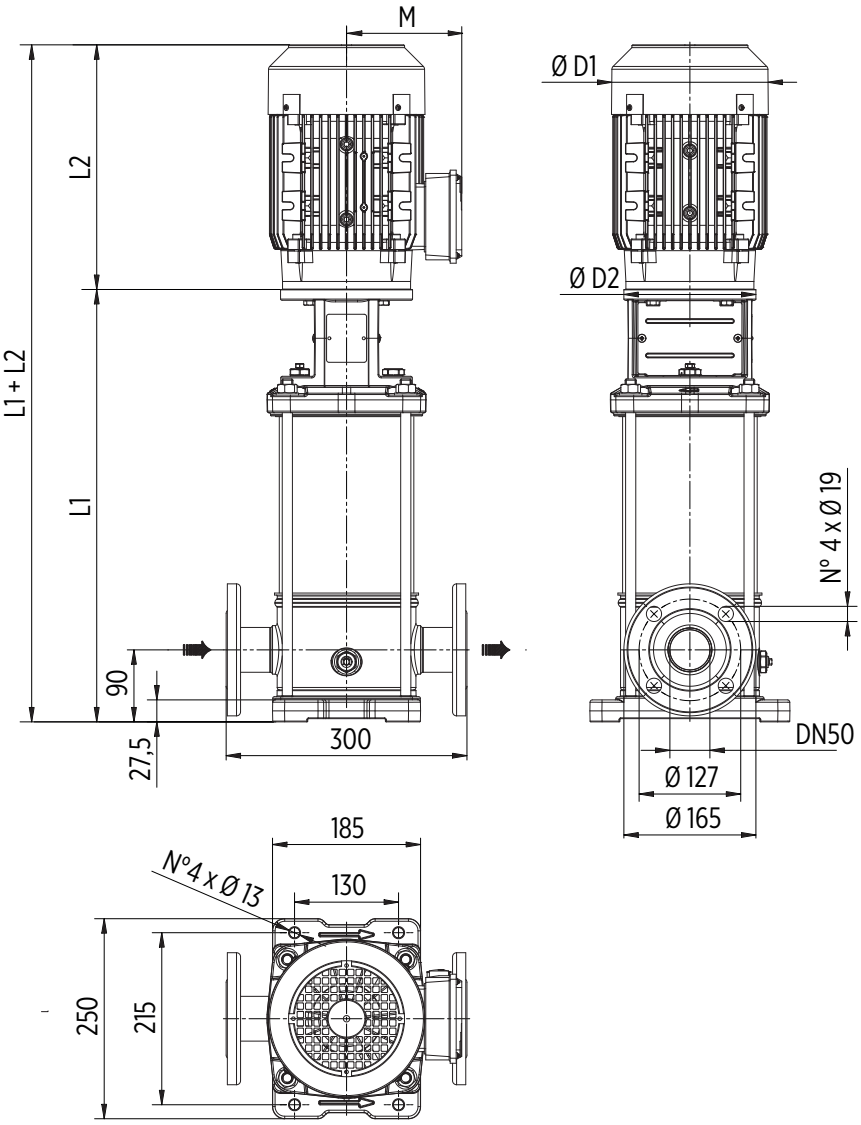


*Round flanges on body type PN25/40: the pump is supplied without counterflanges (optional accessories, including bolts and joints)*

| TYPE | MOTOR | | DIMENSIONS (mm) | | | | | | Kg | | |
|---|---|---|---|---|---|---|---|---|---|---|---|
| | kW | Dim | L1 | L2 | M | D1 | D2 | L1+L2 | Pump | Motor | Electric Pump |
| **U 18HX-100/1T** | 0,75 | 80 | 396 | 243 | 130 | 157 | 170 | 639 | 19 | 17 | 36 |
| **U 18HX-200/2T** | 1,5 | 90 | 396 | 280 | 145 | 177 | 170 | 676 | 20 | 23 | 43 |
| **U 18HX-300/3T** | 2,2 | 90 | 444 | 308 | 145 | 177 | 170 | 752 | 21,5 | 26 | 47,5 |
| **U 18HX-400/4T** | 3 | 100 | 492 | 333 | 157 | 205 | 170 | 825 | 22,5 | 35 | 57,5 |
| **U 18HX-550/5T** | 4 | 112 | 540 | 350 | 177 | 220 | 170 | 890 | 24 | 43 | 67 |
| **U 18HX-750/6T** | 5,5 | 132 | 800 | 400 | 197 | 256 | 300 | 1200 | 45,5 | 66 | 111,5 |
| **U 18HX-750/7T** | 5,5 | 132 | 848 | 400 | 197 | 256 | 300 | 1248 | 46,5 | 66 | 112,5 |
| **U 18HX-1000/8T** | 7,5 | 132 | 896 | 400 | 197 | 256 | 300 | 1296 | 48 | 73 | 121 |
| **U 18HX-1000/9T** | 7,5 | 132 | 944 | 400 | 197 | 256 | 300 | 1344 | 49,5 | 73 | 122,5 |
| **U 18HX-1500/10T** | 11 | 160 | 1012 | 503 | 255 | 315 | 350 | 1515 | 54 | 120 | 174 |
| **U 18HX-1500/11T** | 11 | 160 | 1060 | 503 | 255 | 315 | 350 | 1563 | 55,5 | 120 | 175,5 |
| **U 18HX-1500/12T** | 11 | 160 | 1108 | 503 | 255 | 315 | 350 | 1611 | 57 | 120 | 177 |
| **U 18HX-1500/13T** | 11 | 160 | 1156 | 503 | 255 | 315 | 350 | 1659 | 58,5 | 120 | 178,5 |
| **U 18HX-1500/14T** | 11 | 160 | 1204 | 503 | 255 | 315 | 350 | 1707 | 60 | 120 | 180 |
| **U 18HX-2000/15T** | 15 | 160 | 1252 | 503 | 255 | 315 | 350 | 1755 | 61 | 132 | 193 |
| **U 18HX-2000/16T** | 15 | 160 | 1300 | 503 | 255 | 315 | 350 | 1803 | 62,5 | 132 | 194,5 |
| **U 18HX-2000/17T** | 15 | 160 | 1348 | 503 | 255 | 315 | 350 | 1851 | 64 | 132 | 196 |

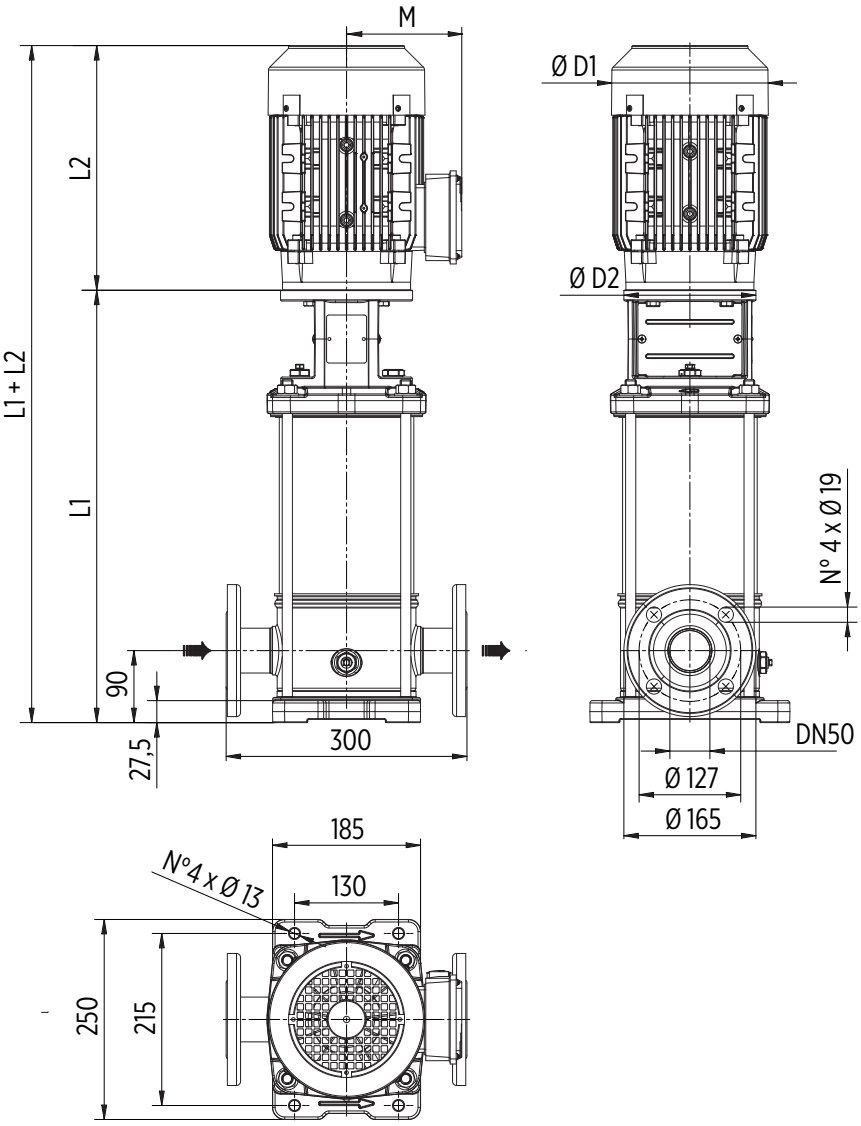


*Round flanges on body type PN25/40: the pump is supplied without counterflanges (optional accessories, including bolts and joints)*

| TYPE | MOTOR | | DIMENSIONS (mm) | | | | | | Kg | | |
|---|---|---|---|---|---|---|---|---|---|---|---|
| | kW | Dim | L1 | L2 | M | D1 | D2 | L1+L2 | Pump | Motor | Electric Pump |
| **U 22HX-200/1T** | 1,1 | 80 | 396 | 243 | 130 | 157 | 170 | 639 | 19 | 18 | 37 |
| **U 22HX-300/2T** | 2,2 | 90 | 396 | 308 | 145 | 177 | 170 | 704 | 20 | 26 | 46 |
| **U 22HX-400/3T** | 3 | 100 | 444 | 333 | 157 | 205 | 170 | 777 | 21,5 | 35 | 56,5 |
| **U 22HX-550/4T** | 4 | 112 | 492 | 350 | 177 | 220 | 170 | 842 | 22,5 | 43 | 65,5 |
| **U 22HX-750/5T** | 5,5 | 132 | 752 | 400 | 197 | 256 | 300 | 1152 | 44 | 66 | 110 |
| **U 22HX-1000/6T** | 7,5 | 132 | 800 | 400 | 197 | 256 | 300 | 1200 | 45,5 | 73 | 118,5 |
| **U 22HX-1000/7T** | 7,5 | 132 | 848 | 400 | 197 | 256 | 300 | 1248 | 46,5 | 73 | 119,5 |
| **U 22HX-1500/8T** | 11 | 160 | 916 | 503 | 255 | 315 | 350 | 1419 | 51,5 | 120 | 171,5 |
| **U 22HX-1500/9T** | 11 | 160 | 964 | 503 | 255 | 315 | 350 | 1467 | 53 | 120 | 173 |
| **U 22HX-1500/10T** | 11 | 160 | 1012 | 503 | 255 | 315 | 350 | 1515 | 54,5 | 120 | 174,5 |
| **U 22HX-2000/11T** | 15 | 160 | 1060 | 503 | 255 | 315 | 350 | 1563 | 55,5 | 132 | 187,5 |
| **U 22HX-2000/12T** | 15 | 160 | 1108 | 503 | 255 | 315 | 350 | 1611 | 57 | 132 | 189 |
| **U 22HX-2000/13T** | 15 | 160 | 1156 | 503 | 255 | 315 | 350 | 1659 | 58,5 | 132 | 190,5 |
| **U 22HX-2000/14T** | 15 | 160 | 1204 | 503 | 255 | 315 | 350 | 1707 | 60 | 132 | 192 |
| **U 22HX-2500/15T** | 18,5 | 160 | 1252 | 598 | 252 | 315 | 350 | 1850 | 61,5 | 150 | 211,5 |
| **U 22HX-2500/16T** | 18,5 | 160 | 1300 | 598 | 252 | 315 | 350 | 1898 | 62,5 | 150 | 212,5 |
| **U 22HX-2500/17T** | 18,5 | 160 | 1348 | 598 | 252 | 315 | 350 | 1946 | 64 | 150 | 214 |

# ULTRA HS/HX

## Multistage Vertical

Stainless steel multistage vertical pumps. Suitable for clean non-loaded fluids, pressurizing system, irrigation, drinking and glycol water, water treatment, food industry, heating and air conditioning, washing system.

| Construction features | |
|---|---|
| **Pump body** | HS: cast iron GJL-250<br>HX: EN 1.4401 / AISI 316 |
| **Motor bracket** | cast iron |
| **Seal plate housing** | HS: EN 1.4301 / AISI 304<br>HX: EN 1.4401 / AISI 316 |
| **Impellers, diffusers, shell** | HS: EN 1.4301 / AISI 304<br>HX: EN 1.4401 / AISI 316 |
| **Pump shaft** | HS: EN 1.4057 / AISI 431<br>HX: EN 1.4460 / AISI 329 |
| **Mechanical seal** | silicon carbide-graphite-EPDM |
| **Intermediate bush** | tungsten carbide |
| **Ambient temperature** | max 40 °C |
| **Liquid temperature** | -15 ÷ +120 °C<br>(Max 85° for domestic use) |
| **Max operating pressure** | 32 bar (U 35-50)<br>25 bar (U 75-90) |
| **Pump body gasket** | EPDM |

| Motor | |
|---|---|
| **2 poles induction motor** | 3~ 230/400V - 50Hz P ⩽ 4kW, size B14 V1<br>3~ 400/690V - 50Hz P > 4kW, size B5 V1<br>IE3 efficiency class |
| **Insulation class** | F |
| **Protection degree** | IP55 |

**U 35 H S - 750 / 3 T -2**

- pump type: U
- nominal flow-rate m³/h: 35
- vertical axis, in-line ports, coupling: H
- S: AISI 304 impellers and diffusers, cast iron pump body
- X: AISI 316 impellers, diffusers and pump body
- nominal power HP×100: 750
- No. of impellers: 3
- motor T 3~: T
- mech. seal and O-rings: -2
  - SiC-Graphite-EPDM
  - V SiC-Graphite-FKM
  - 2E SiC-SiC-EPDM
  - 2V SiC-SiC-FKM

*More details of the mechanical seals are included on page 199*

# ULTRA 35-50

| TYPE - 50 Hz | P2 | | Q (l/min - m³/h - US gpm) | | | | | | | | | |
|---|---|---|---|---|---|---|---|---|---|---|---|---|
| 3~ | | | 0 | 417 | 500 | 566,7 | 666,7 | 700 | 800 | 900 | 1000 | 1066,7 |
| | | | 0 | 25 | 30 | 34 | 40 | 42 | 48 | 54 | 60 | 64 |
| | | | 0 | 109,9 | 131,9 | 149,5 | 175,9 | 184,7 | 211,0 | 237,4 | 263,8 | 281,4 |
| | HP | kW | H (m) | | | | | | | | | |
| **U 35...-300/1T** | 3 | 2,2 | 24,8 | 18,6 | 17,2 | 15,8 | 12,7 | 11,6 | | | | |
| **U 35...-550/2-2RT** | 5,5 | 4 | 36,2 | 29,3 | 26,3 | 23,1 | 17,8 | 15,7 | | | | |
| **U 35...-550/2-1RT** | 5,5 | 4 | 42,8 | 34,3 | 31,6 | 28,8 | 23,4 | 21,3 | | | | |
| **U 35...-750/2T** | 7,5 | 5,5 | 48,5 | 39,6 | 36,9 | 34,4 | 29,1 | 27,2 | | | | |
| **U 35...-750/3-2RT** | 7,5 | 5,5 | 60,3 | 49,0 | 44,9 | 40,6 | 32,7 | 29,6 | | | | |
| **U 35...-1000/3-1RT** | 10 | 7,5 | 67,5 | 54,1 | 50,1 | 46,1 | 38,0 | 35,0 | | | | |
| **U 35...-1000/3T** | 10 | 7,5 | 72,2 | 58,2 | 54,2 | 50,3 | 42,4 | 39,5 | | | | |
| **U 35...-1000/4-2RT** | 10 | 7,5 | 85,1 | 68,6 | 63,9 | 58,4 | 48,8 | 44,7 | | | | |
| **U 35...-1500/4-1RT** | 15 | 11 | 92,8 | 75,3 | 70,2 | 65,2 | 54,8 | 50,8 | | | | |
| **U 35...-1500/4T** | 15 | 11 | 99,4 | 81,0 | 76,3 | 71,8 | 62,2 | 58,5 | | | | |
| **U 35...-1500/5-2RT** | 15 | 11 | 109,2 | 89,5 | 82,9 | 76,2 | 63,5 | 58,5 | | | | |
| **U 35...-1500/5-1RT** | 15 | 11 | 115,1 | 93,6 | 87,0 | 80,6 | 67,5 | 62,4 | | | | |
| **U 35...-2000/5T** | 20 | 15 | 121,1 | 99,3 | 93,1 | 87,4 | 74,9 | 70,0 | | | | |
| **U 35...-2000/6-2RT** | 20 | 15 | 133,8 | 109,6 | 101,7 | 93,9 | 78,7 | 72,7 | | | | |
| **U 35...-2000/6-1RT** | 20 | 15 | 139,7 | 113,7 | 105,8 | 98,3 | 82,7 | 76,6 | | | | |
| **U 35...-2000/6T** | 20 | 15 | 145,6 | 119,3 | 111,9 | 105,0 | 90,1 | 84,2 | | | | |
| **U 35...-2000/7-2RT** | 20 | 15 | 157,5 | 128,3 | 119,1 | 110,1 | 92,3 | 85,3 | | | | |
| **U 35...-2000/7-1RT** | 20 | 15 | 163,3 | 132,3 | 123,2 | 114,4 | 96,2 | 89,1 | | | | |
| **U 35...-2500/7T** | 25 | 18,5 | 169,2 | 137,9 | 129,1 | 121,0 | 103,5 | 96,6 | | | | |
| **U 35...-2500/8-2RT** | 25 | 18,5 | 185,5 | 152,0 | 142,0 | 132,5 | 112,8 | 105,1 | | | | |
| **U 35...-2500/8-1RT** | 25 | 18,5 | 191,9 | 156,4 | 146,6 | 137,4 | 117,4 | 109,6 | | | | |
| **U 35...-2500/8T** | 25 | 18,5 | 198,4 | 162,5 | 153,0 | 144,6 | 125,4 | 117,8 | | | | |
| **U 35...-3000/9-2RT** | 30 | 22 | 209,8 | 171,4 | 160,2 | 149,5 | 127,4 | 118,7 | | | | |
| **U 35...-3000/9-1RT** | 30 | 22 | 216,2 | 175,8 | 164,7 | 154,4 | 131,9 | 123,1 | | | | |
| **U 35...-3000/9T** | 30 | 22 | 222,7 | 181,8 | 171,1 | 161,5 | 139,8 | 131,3 | | | | |
| **U 35...-3000/10-2RT** | 30 | 22 | 234,0 | 190,6 | 178,1 | 166,3 | 141,7 | 132,1 | | | | |
| **U 35...-3000/10-1RT** | 30 | 22 | 240,3 | 194,9 | 182,6 | 171,1 | 146,1 | 136,4 | | | | |
| **U 35...-4000/10T** | 40 | 30 | 246,8 | 200,9 | 188,9 | 178,2 | 154,0 | 144,5 | | | | |
| **U 35...-4000/11-2RT** | 40 | 30 | 262,9 | 218,3 | 205,1 | 192,7 | 166,3 | 155,8 | | | | |
| **U 35...-4000/11-1RT** | 40 | 30 | 269,5 | 222,9 | 209,9 | 197,8 | 171,2 | 160,5 | | | | |
| **U 35...-4000/11T** | 40 | 30 | 276,2 | 229,2 | 216,5 | 205,3 | 179,4 | 169,1 | | | | |
| **U 35...-4000/12-2RT** | 40 | 30 | 288,1 | 240,0 | 226,0 | 213,0 | 184,4 | 173,3 | | | | |
| **U 35...-4000/12-1RT** | 40 | 30 | 294,7 | 244,8 | 230,9 | 218,4 | 189,7 | 178,6 | | | | |
| **U 35...-4000/12T** | 40 | 30 | 301,4 | 251,1 | 237,8 | 226,0 | 197,6 | 188,0 | | | | |
| **U 35...-4000/13-2RT** | 40 | 30 | 313,0 | 260,4 | 245,3 | 231,3 | 200,3 | 188,3 | | | | |
| **U 35...-4000/13-1RT** | 40 | 30 | 319,6 | 265,2 | 250,2 | 236,6 | 205,6 | 193,6 | | | | |
| **U 35...-4000/13T** | 40 | 30 | 326,3 | 271,5 | 257,0 | 244,2 | 213,5 | 202,9 | | | | |
| **U 50...-400/1-1RT** | 4 | 3 | 19,6 | | | 16,0 | 14,6 | 14,0 | 12,1 | 9,7 | 7,0 | 4,9 |
| **U 50...-550/1T** | 5,5 | 4 | 25,1 | | | 20,4 | 19,0 | 18,5 | 16,8 | 14,8 | 12,5 | 10,4 |
| **U 50...-750/2-2RT** | 7,5 | 5,5 | 38,4 | | | 33,9 | 31,5 | 30,5 | 27,4 | 23,7 | 19,3 | 16,0 |
| **U 50...-1000/2T** | 10 | 7,5 | 49,0 | | | 42,0 | 39,8 | 38,8 | 35,5 | 31,8 | 27,5 | 24,1 |
| **U 50...-1500/3-2RT** | 15 | 11 | 63,0 | | | 55,9 | 52,7 | 51,4 | 46,8 | 41,5 | 35,1 | 30,3 |
| **U 50...-1500/3T** | 15 | 11 | 74,2 | | | 65,0 | 62,1 | 60,9 | 56,5 | 51,3 | 45,5 | 41,0 |
| **U 50...-2000/4-2RT** | 20 | 15 | 87,5 | | | 77,4 | 73,3 | 71,6 | 65,5 | 58,4 | 50,1 | 43,8 |
| **U 50...-2000/4T** | 20 | 15 | 97,5 | | | 86,4 | 82,8 | 81,3 | 75,4 | 68,5 | 60,8 | 54,7 |
| **U 50...-2500/5-2RT** | 25 | 18,5 | 112,1 | | | 99,9 | 95,0 | 92,9 | 85,5 | 76,7 | 66,6 | 58,8 |
| **U 50...-2500/5T** | 25 | 18,5 | 122,3 | | | 109,1 | 104,7 | 102,9 | 95,6 | 87,1 | 77,5 | 70,0 |
| **U 50...-3000/6-2RT** | 30 | 22 | 136,0 | | | 120,7 | 114,9 | 112,4 | 103,4 | 92,9 | 80,8 | 71,5 |
| **U 50...-3000/6T** | 30 | 22 | 146,0 | | | 129,8 | 124,5 | 122,2 | 113,3 | 103,0 | 91,6 | 82,5 |
| **U 50...-4000/7-2RT** | 40 | 30 | 162,6 | | | 146,4 | 140,1 | 137,3 | 127,2 | 115,2 | 101,3 | 90,8 |
| **U 50...-4000/7T** | 40 | 30 | 173,0 | | | 155,9 | 150,1 | 147,7 | 137,7 | 126,0 | 112,7 | 102,5 |
| **U 50...-4000/8-2RT** | 40 | 30 | 187,2 | | | 168,3 | 161,1 | 158,0 | 146,4 | 132,7 | 116,8 | 104,8 |
| **U 50...-4000/8T** | 40 | 30 | 197,5 | | | 177,7 | 171,1 | 168,2 | 156,8 | 143,4 | 128,2 | 116,5 |
| **U 50...-5000/9-2RT** | 50 | 37 | 211,7 | | | 190,2 | 182,2 | 178,7 | 165,7 | 150,3 | 132,6 | 119,1 |
| **U 50...-5000/9T** | 50 | 37 | 222,0 | | | 199,7 | 192,2 | 188,9 | 176,1 | 161,0 | 143,9 | 130,7 |
| **U 50...-5000/10-2RT** | 50 | 37 | 236,1 | | | 211,9 | 203,0 | 199,1 | 184,6 | 167,5 | 147,9 | 132,9 |
| **U 50...-5000/10T** | 50 | 37 | 246,4 | | | 221,3 | 212,9 | 209,3 | 195,0 | 178,1 | 159,1 | 144,4 |
| **U 50...-6000/11-2RT** | 60 | 45 | 261,5 | | | 235,3 | 225,7 | 221,5 | 205,7 | 187,0 | 165,5 | 149,1 |
| **U 50...-6000/11T** | 60 | 45 | 271,8 | | | 244,8 | 235,7 | 231,8 | 216,2 | 197,7 | 176,9 | 160,9 |
| **U 50...-6000/12-2RT** | 60 | 45 | 286,0 | | | 257,2 | 246,7 | 242,1 | 224,8 | 204,5 | 181,0 | 163,2 |
| **U 50...-6000/12T** | 60 | 45 | 296,3 | | | 266,6 | 256,7 | 252,4 | 235,3 | 215,2 | 192,4 | 174,9 |

| TYPE - 50 Hz | P2 | | Q (l/min - m³/h - US gpm) | | | | | | | | |
|---|---|---|---|---|---|---|---|---|---|---|---|
| 3~ | | | 0 | 500 | 666,7 | 750 | 833,3 | 1000 | 1166,7 | 1333,3 | 1466,7 |
| | | | 0 | 30 | 40 | 45 | 50 | 60 | 70 | 80 | 88 |
| | | | 0 | 131,9 | 175,9 | 197,9 | 219,8 | 263,8 | 307,8 | 351,7 | 386,9 |
| | HP | kW | H (m) | | | | | | | | |
| **U 75...-550/1-1RT** | 5,5 | 4 | 21,3 | 18,2 | 17,0 | 16,3 | 15,5 | 13,3 | 10,3 | 6,8 | 3,7 |
| **U 75...-750/1T** | 7,5 | 5,5 | 30,2 | 24,8 | 23,0 | 22,3 | 21,7 | 20,3 | 18,3 | 15,4 | 12,2 |
| **U 75...-1000/2-2RT** | 10 | 7,5 | 38,9 | 37,2 | 35,8 | 34,8 | 33,8 | 30,5 | 25,8 | 20,3 | 14,6 |
| **U 75...-1500/2-1RT** | 15 | 11 | 47,8 | 44,3 | 42,6 | 41,6 | 40,6 | 38,0 | 34,2 | 29,3 | 24,0 |
| **U 75...-1500/2T** | 15 | 11 | 59,3 | 51,2 | 48,0 | 46,8 | 45,5 | 43,2 | 39,9 | 35,3 | 30,8 |
| **U 75...-2000/3-2RT** | 20 | 15 | 67,3 | 63,0 | 60,6 | 59,1 | 57,6 | 53,4 | 47,2 | 39,5 | 31,4 |
| **U 75...-2000/3-1RT** | 20 | 15 | 75,5 | 69,2 | 66,3 | 64,8 | 63,2 | 59,5 | 54,1 | 46,9 | 38,7 |
| **U 75...-2500/3T** | 25 | 18,5 | 89,6 | 77,6 | 72,8 | 70,9 | 69,0 | 65,7 | 60,7 | 53,9 | 47,2 |
| **U 75...-2500/4-2RT** | 25 | 18,5 | 95,5 | 88,6 | 85,1 | 83,2 | 81,1 | 76,0 | 68,3 | 58,5 | 47,9 |
| **U 75...-3000/4-1RT** | 30 | 22 | 103,7 | 94,7 | 90,9 | 88,8 | 86,7 | 82,1 | 75,2 | 65,9 | 55,3 |
| **U 75...-3000/4T** | 30 | 22 | 111,8 | 100,8 | 96,7 | 94,5 | 92,4 | 88,4 | 82,3 | 73,3 | 62,9 |
| **U 75...-4000/5-2RT** | 40 | 30 | 125,3 | 116,2 | 111,8 | 109,5 | 107,0 | 101,1 | 92,1 | 80,4 | 68,0 |
| **U 75...-4000/5-1RT** | 40 | 30 | 133,9 | 122,7 | 117,9 | 115,5 | 113,0 | 107,6 | 99,5 | 88,4 | 76,2 |
| **U 75...-4000/5T** | 40 | 30 | 142,4 | 129,2 | 124,0 | 121,5 | 119,0 | 114,1 | 106,9 | 96,3 | 84,6 |
| **U 75...-4000/6-2RT** | 40 | 30 | 153,5 | 141,6 | 136,2 | 133,3 | 130,3 | 123,4 | 112,9 | 99,0 | 84,1 |
| **U 75...-5000/6-1RT** | 50 | 37 | 162,1 | 148,2 | 142,4 | 139,4 | 136,4 | 130,0 | 120,4 | 107,1 | 92,5 |
| **U 75...-5000/6T** | 50 | 37 | 170,6 | 154,7 | 148,5 | 145,4 | 142,3 | 136,5 | 127,8 | 115,0 | 100,9 |
| **U 75...-5000/7-2RT** | 50 | 37 | 181,7 | 167,0 | 160,6 | 157,2 | 153,6 | 145,7 | 133,7 | 117,7 | 100,3 |
| **U 75...-5000/7-1RT** | 50 | 37 | 190,1 | 173,5 | 166,6 | 163,1 | 159,5 | 152,1 | 141,0 | 125,5 | 108,3 |
| **U 75...-6000/7T** | 60 | 45 | 199,5 | 181,1 | 173,8 | 170,3 | 166,7 | 160,0 | 149,9 | 135,1 | 118,9 |
| **U 75...-6000/8-2RT** | 60 | 45 | 210,6 | 193,5 | 186,0 | 182,2 | 178,1 | 169,3 | 156,0 | 137,9 | 118,4 |
| **U 75...-6000/8-1RT** | 60 | 45 | 219,2 | 200,0 | 192,1 | 188,2 | 184,1 | 175,8 | 163,4 | 145,9 | 126,6 |
| **U 75...-6000/8T** | 60 | 45 | 227,7 | 206,5 | 198,2 | 194,1 | 190,1 | 182,3 | 170,7 | 153,8 | 135,1 |

| TYPE - 50 Hz | P2 | | Q (l/min - m³/h - US gpm) | | | | | | | | | |
|---|---|---|---|---|---|---|---|---|---|---|---|---|
| 3~ | | | 0 | 750 | 833,3 | 1000 | 1166,7 | 1333,3 | 1466,7 | 1666,7 | 1833,3 | 1916,7 |
| | | | 0 | 45 | 50 | 60 | 70 | 80 | 88 | 100 | 110 | 115 |
| | | | 0 | 197,9 | 219,8 | 263,8 | 307,8 | 351,7 | 386,9 | 439,7 | 483,6 | 505,6 |
| | HP | kW | H (m) | | | | | | | | | |
| **U 90...-750/1-1RT** | 7,5 | 5,5 | 26,4 | 20,5 | 19,9 | 18,7 | 17,3 | 15,5 | 13,2 | 9,5 | 5,7 | 3,5 |
| **U 90...-1000/1T** | 10 | 7,5 | 35,6 | 27,0 | 25,6 | 23,2 | 21,9 | 20,4 | 18,8 | 15,7 | 12,4 | 10,5 |
| **U 90...-1500/2-2RT** | 15 | 11 | 49,6 | 42,4 | 41,3 | 39,0 | 36,6 | 33,2 | 29,4 | 22,7 | 15,7 | 11,7 |
| **U 90...-2000/2T** | 20 | 15 | 69,2 | 56,6 | 54,5 | 50,5 | 47,3 | 44,3 | 41,6 | 36,3 | 30,5 | 27,3 |
| **U 90...-2500/3-2RT** | 25 | 18,5 | 80,4 | 70,8 | 69,1 | 65,6 | 62,2 | 57,7 | 53,0 | 44,3 | 34,9 | 30,4 |
| **U 90...-3000/3T** | 30 | 22 | 92,4 | 82,6 | 80,6 | 76,7 | 73,2 | 69,4 | 65,5 | 57,8 | 49,7 | 45,2 |
| **U 90...-4000/4-2RT** | 40 | 30 | 113,1 | 100,6 | 98,2 | 93,5 | 89,0 | 83,5 | 77,5 | 66,5 | 54,6 | 48,5 |
| **U 90...-4000/4T** | 40 | 30 | 125,6 | 113,0 | 110,4 | 105,2 | 100,6 | 95,7 | 90,7 | 80,8 | 70,2 | 64,4 |
| **U 90...-5000/5-2RT** | 50 | 37 | 144,1 | 128,4 | 125,4 | 119,3 | 113,7 | 106,9 | 99,7 | 86,1 | 71,6 | 64,1 |
| **U 90...-5000/5T** | 50 | 37 | 156,6 | 140,7 | 137,4 | 130,9 | 125,2 | 119,1 | 112,8 | 100,3 | 87,1 | 79,8 |
| **U 90...-6000/6-2RT** | 60 | 45 | 175,9 | 157,0 | 153,4 | 146,1 | 139,3 | 131,4 | 122,9 | 107,0 | 89,8 | 80,8 |
| **U 90...-6000/6T** | 60 | 45 | 188,4 | 169,5 | 165,6 | 157,8 | 150,9 | 143,6 | 136,2 | 121,3 | 105,5 | 96,7 |

# 35 HS/HX

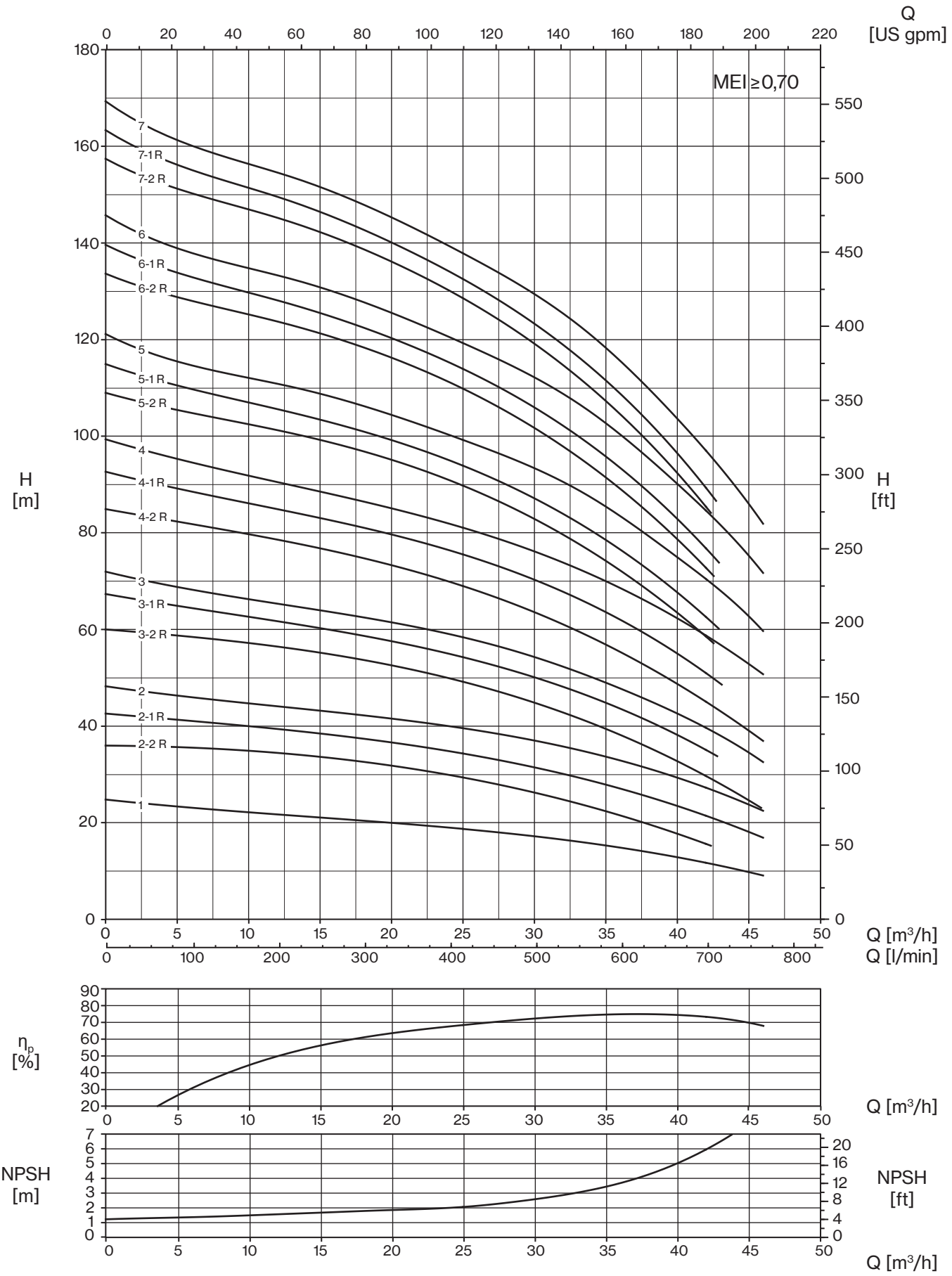


*The hydraulic characteristics are guaranteed, according to ISO Standard 9906:2012, grade 3B*

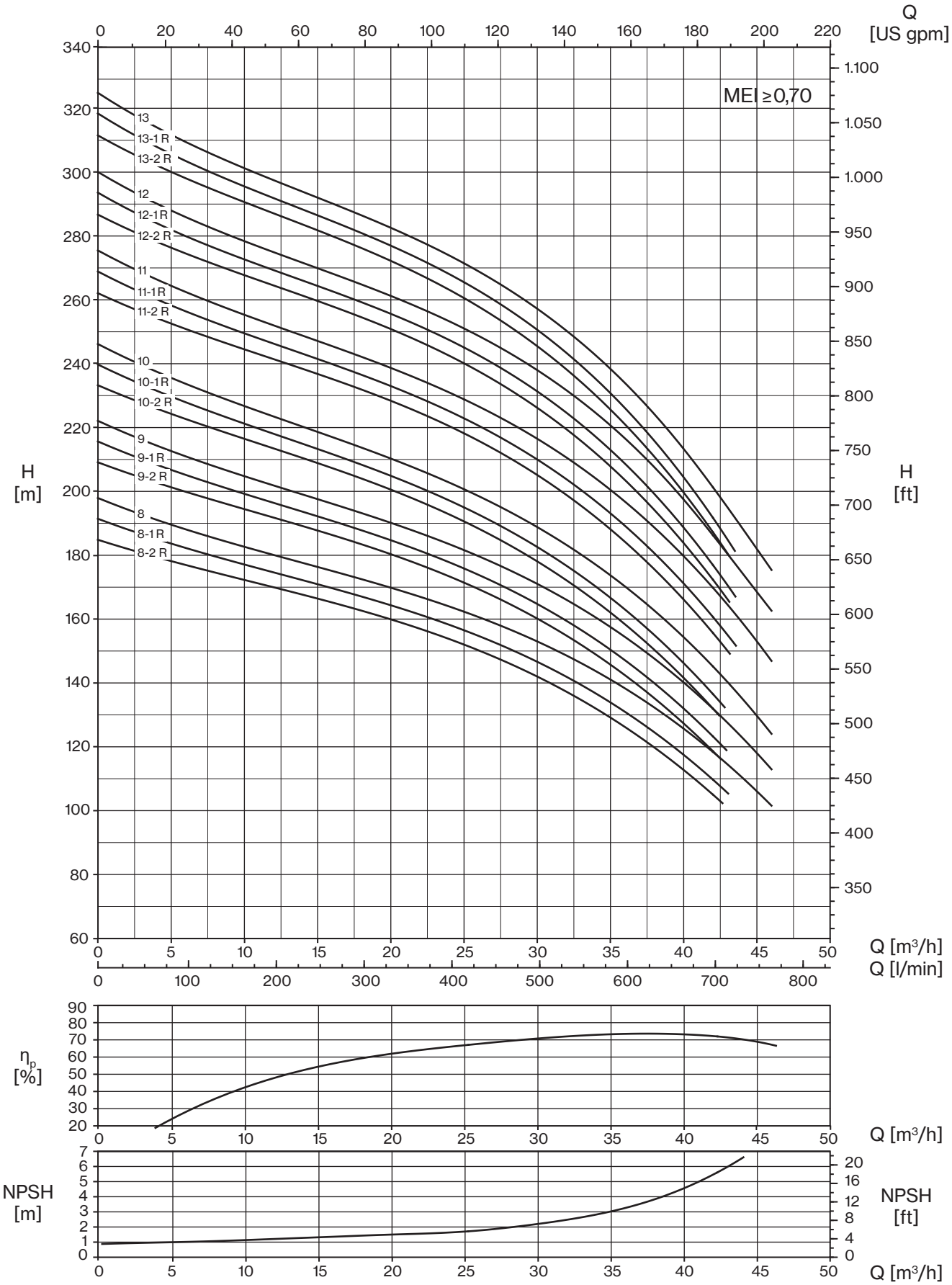


*The hydraulic characteristics are guaranteed, according to ISO Standard 9906:2012, grade 3B*

# 50 HS/HX

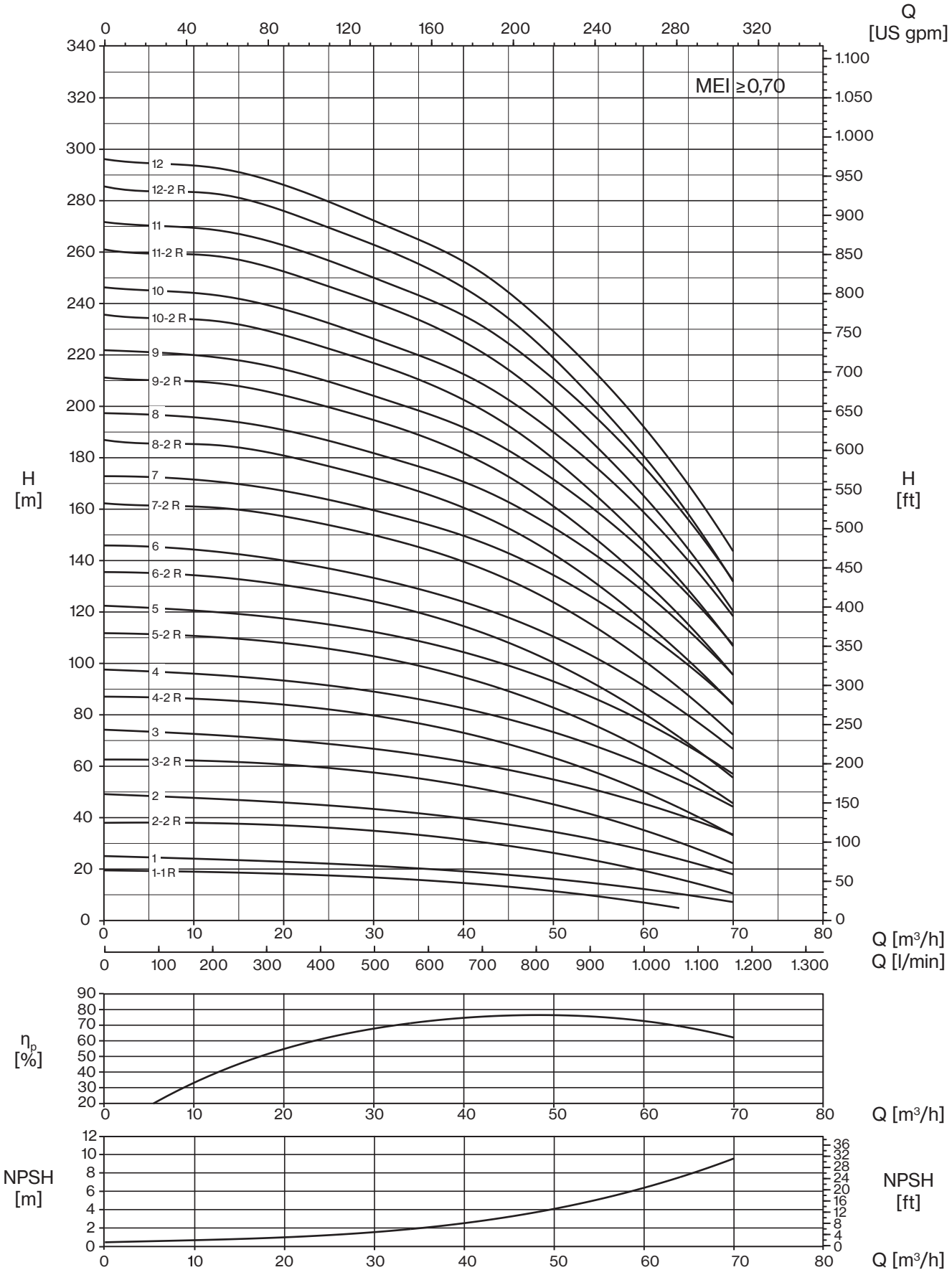


*The hydraulic characteristics are guaranteed, according to ISO Standard 9906:2012, grade 3B*

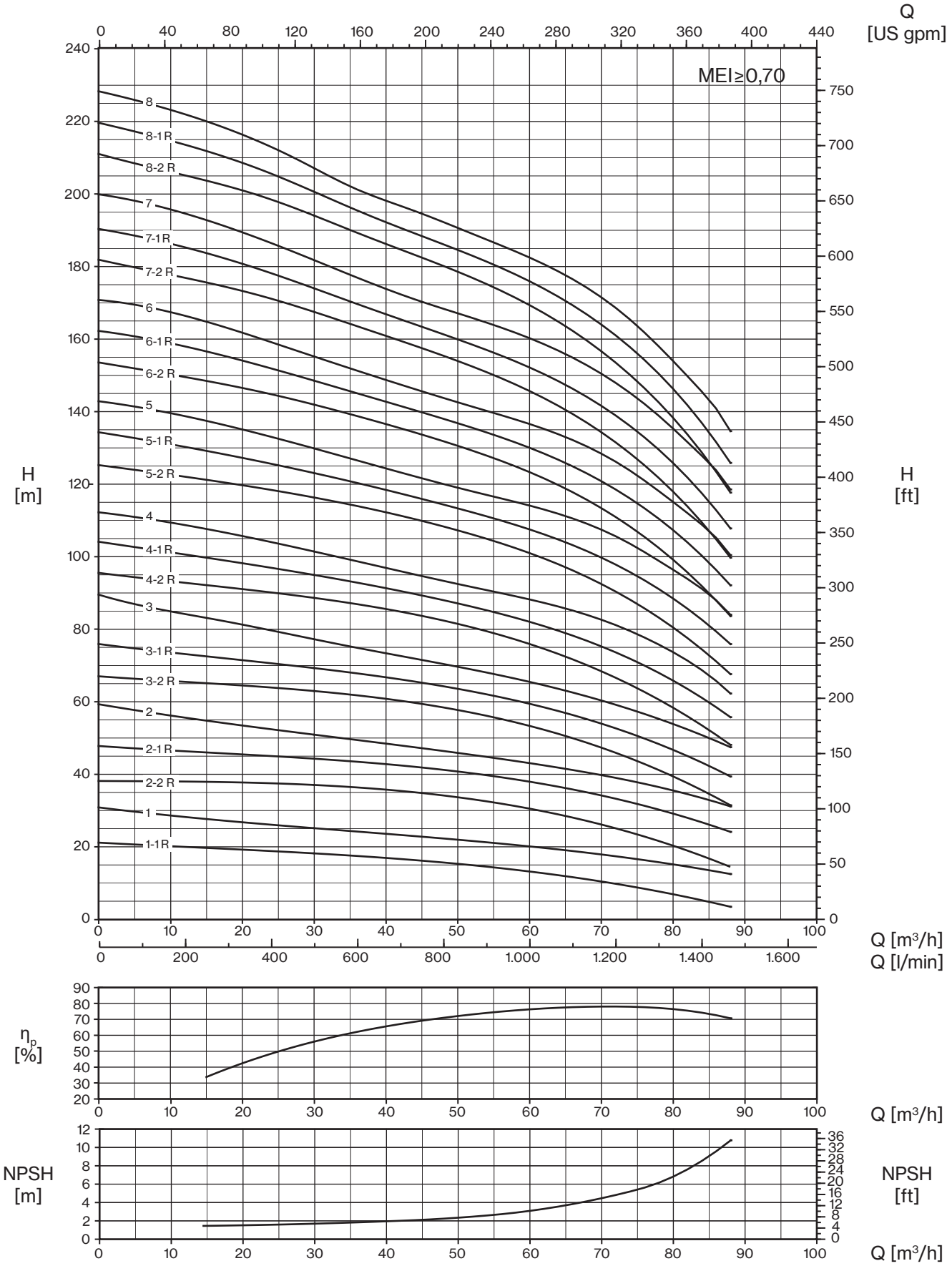
Q
[US gpm]
MEI≥0,70
H
[m]
H
[ft]
8
8-1 R
8-2 R
7
7-1 R
7-2 R
6
6-1 R
6-2 R
5
5-1 R
5-2 R
4
4-1 R
4-2 R
3
3-1 R
3-2 R
2
2-1 R
2-2 R
1
1-1 R
Q [m³/h]
Q [l/min]
η_p
[%]
Q [m³/h]
NPSH
[m]
NPSH
[ft]
Q [m³/h]

# 90 HS/HX

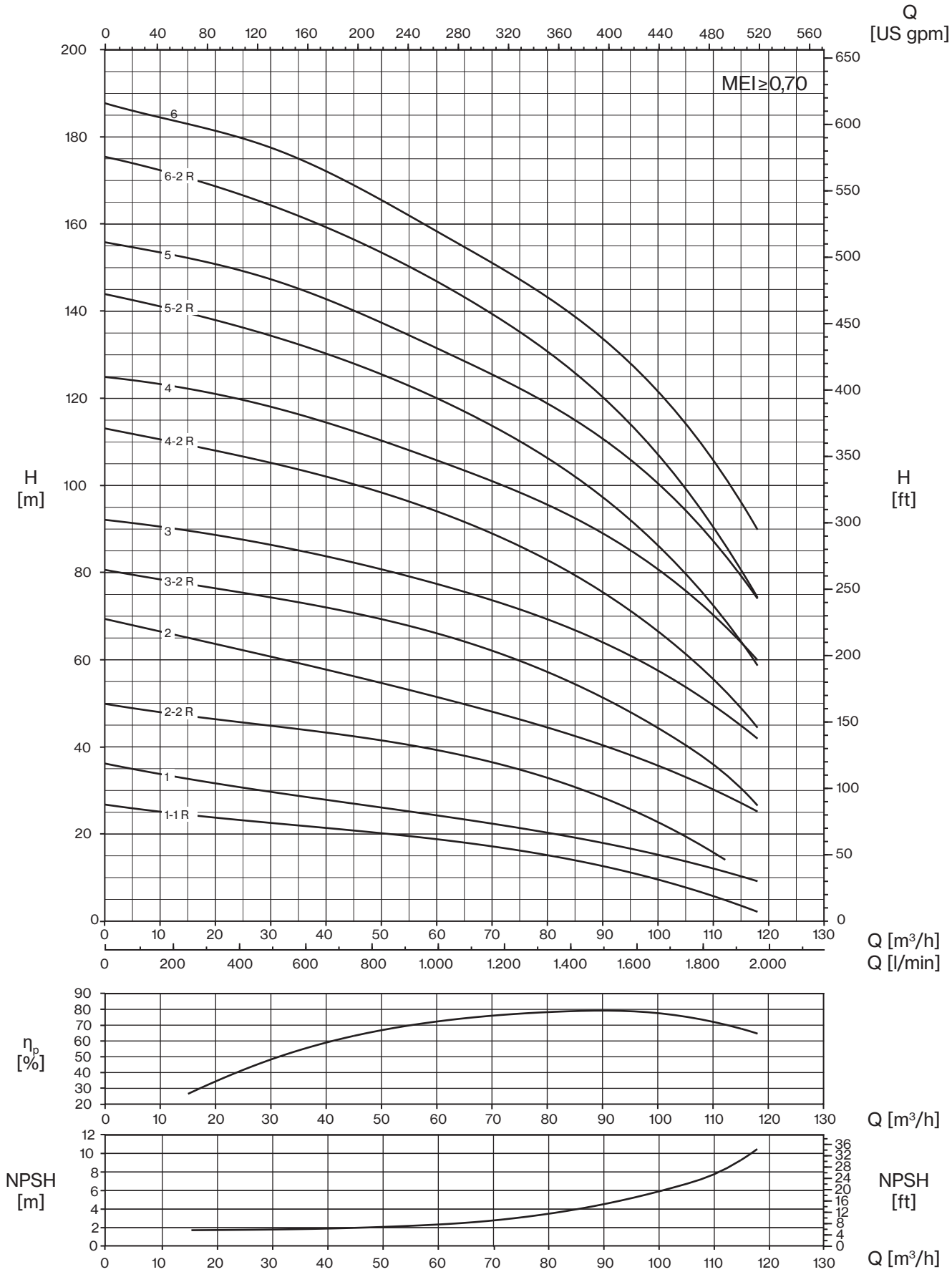


*The hydraulic characteristics are guaranteed, according to ISO Standard 9906:2012, grade 3B*

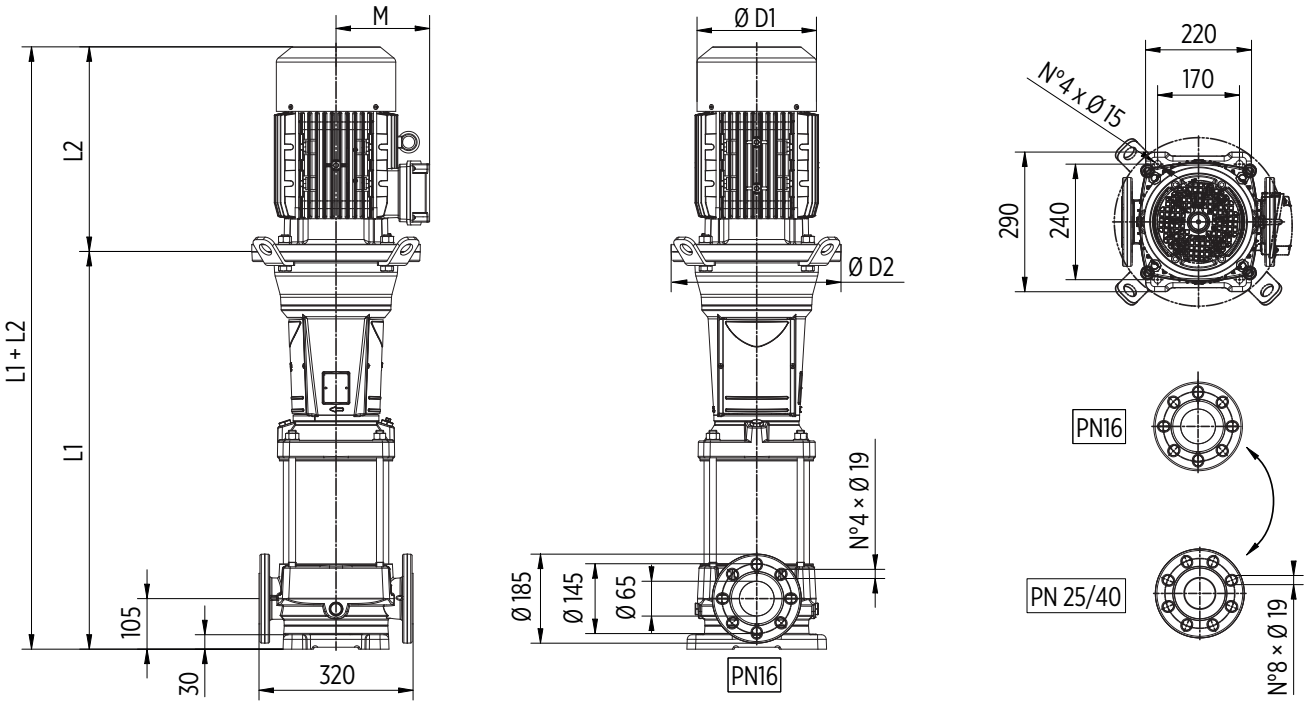


*Round flanges on body type PN25/40: the pump is supplied without counterflanges (optional accessories, including bolts and joints)*

| TYPE | MOTOR | | DIMENSIONS (mm) | | | | | | Kg | | |
|---|---|---|---|---|---|---|---|---|---|---|---|
| | kW | Dim | L1 | L2 | M | D1 | D2 | L1+L2 | Pump | Motor | Electric Pump |
| **U 35...-300/1T** | 2,2 | 90 | 431 | 308 | 145 | 177 | 170 | 739 | 48,5 | 26 | 74,5 |
| **U 35...-550/2-2RT** | 4 | 112 | 513 | 350 | 177 | 220 | 170 | 863 | 52 | 43 | 95 |
| **U 35...-550/2-1RT** | 4 | 112 | 513 | 350 | 177 | 220 | 170 | 863 | 52 | 43 | 95 |
| **U 35...-750/2T** | 5,5 | 132 | 724 | 400 | 197 | 256 | 300 | 1124 | 72,5 | 66 | 138,5 |
| **U 35...-750/3-2RT** | 5,5 | 132 | 806 | 400 | 197 | 256 | 300 | 1206 | 76,5 | 66 | 142,5 |
| **U 35...-1000/3-1RT** | 7,5 | 132 | 806 | 400 | 197 | 256 | 300 | 1206 | 76,5 | 73 | 149,5 |
| **U 35...-1000/3T** | 7,5 | 132 | 806 | 400 | 197 | 256 | 300 | 1206 | 76,5 | 73 | 149,5 |
| **U 35...-1000/4-2RT** | 7,5 | 132 | 888 | 400 | 197 | 256 | 300 | 1288 | 80,5 | 73 | 153,5 |
| **U 35...-1500/4-1RT** | 11 | 160 | 908 | 503 | 255 | 315 | 350 | 1411 | 84 | 120 | 204 |
| **U 35...-1500/4T** | 11 | 160 | 908 | 503 | 255 | 315 | 350 | 1411 | 84 | 120 | 204 |
| **U 35...-1500/5-2RT** | 11 | 160 | 991 | 503 | 255 | 315 | 350 | 1494 | 88 | 120 | 208 |
| **U 35...-1500/5-1RT** | 11 | 160 | 991 | 503 | 255 | 315 | 350 | 1494 | 88 | 120 | 208 |
| **U 35...-2000/5T** | 15 | 160 | 991 | 503 | 255 | 315 | 350 | 1494 | 88 | 132 | 220 |
| **U 35...-2000/6-2RT** | 15 | 160 | 1073 | 503 | 255 | 315 | 350 | 1576 | 92 | 132 | 224 |
| **U 35...-2000/6-1RT** | 15 | 160 | 1073 | 503 | 255 | 315 | 350 | 1576 | 92 | 132 | 224 |
| **U 35...-2000/6T** | 15 | 160 | 1073 | 503 | 255 | 315 | 350 | 1576 | 92 | 132 | 224 |
| **U 35...-2000/7-2RT** | 15 | 160 | 1155 | 503 | 255 | 315 | 350 | 1658 | 96 | 132 | 228 |
| **U 35...-2000/7-1RT** | 15 | 160 | 1155 | 503 | 255 | 315 | 350 | 1658 | 96 | 132 | 228 |
| **U 35...-2500/7T** | 18,5 | 160 | 1155 | 598 | 252 | 315 | 350 | 1753 | 96 | 150 | 246 |
| **U 35...-2500/8-2RT** | 18,5 | 160 | 1237 | 598 | 252 | 315 | 350 | 1835 | 100 | 150 | 250 |
| **U 35...-2500/8-1RT** | 18,5 | 160 | 1237 | 598 | 252 | 315 | 350 | 1835 | 100 | 150 | 250 |
| **U 35...-2500/8T** | 18,5 | 160 | 1237 | 598 | 252 | 315 | 350 | 1835 | 100 | 150 | 250 |
| **U 35...-3000/9-2RT** | 22 | 180 | 1319 | 620 | 270 | 360 | 350 | 1939 | 103,5 | 205 | 308,5 |
| **U 35...-3000/9-1RT** | 22 | 180 | 1319 | 620 | 270 | 360 | 350 | 1939 | 103,5 | 205 | 308,5 |
| **U 35...-3000/9T** | 22 | 180 | 1319 | 620 | 270 | 360 | 350 | 1939 | 103,5 | 205 | 308,5 |
| **U 35...-3000/10-2RT** | 22 | 180 | 1401 | 620 | 270 | 360 | 350 | 2021 | 107,5 | 205 | 312,5 |
| **U 35...-3000/10-1RT** | 22 | 180 | 1401 | 620 | 270 | 360 | 350 | 2021 | 107,5 | 205 | 312,5 |
| **U 35...-4000/10T** | 30 | 200 | 1406 | 661 | 303 | 400 | 400 | 2067 | 111 | 250 | 361 |
| **U 35...-4000/11-2RT** | 30 | 200 | 1488 | 661 | 303 | 400 | 400 | 2149 | 115 | 250 | 365 |
| **U 35...-4000/11-1RT** | 30 | 200 | 1488 | 661 | 303 | 400 | 400 | 2149 | 115 | 250 | 365 |
| **U 35...-4000/11T** | 30 | 200 | 1488 | 661 | 303 | 400 | 400 | 2149 | 115 | 250 | 365 |
| **U 35...-4000/12-2RT** | 30 | 200 | 1570 | 661 | 303 | 400 | 400 | 2231 | 119 | 250 | 369 |
| **U 35...-4000/12-1RT** | 30 | 200 | 1570 | 661 | 303 | 400 | 400 | 2231 | 119 | 250 | 369 |
| **U 35...-4000/12T** | 30 | 200 | 1570 | 661 | 303 | 400 | 400 | 2231 | 119 | 250 | 369 |
| **U 35...-4000/13-2RT** | 30 | 200 | 1652 | 661 | 303 | 400 | 400 | 2313 | 122,5 | 250 | 372,5 |
| **U 35...-4000/13-1RT** | 30 | 200 | 1652 | 661 | 303 | 400 | 400 | 2313 | 122,5 | 250 | 372,5 |
| **U 35...-4000/13T** | 30 | 200 | 1652 | 661 | 303 | 400 | 400 | 2313 | 122,5 | 250 | 372,5 |

# 50 HS/HX

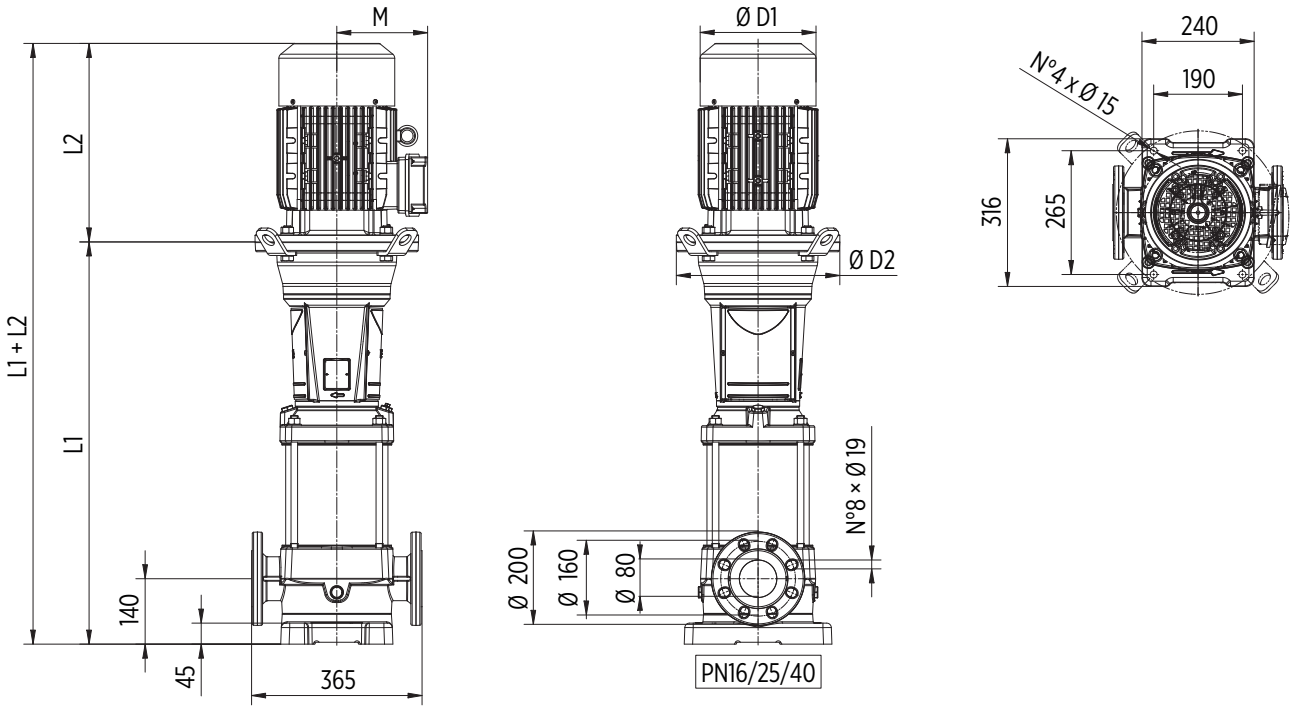


*Round flanges on body type PN25/40: the pump is supplied without counterflanges (optional accessories, including bolts and joints)*

| TYPE | MOTOR | | DIMENSIONS (mm) | | | | | | Kg | | |
|---|---|---|---|---|---|---|---|---|---|---|---|
| | kW | Dim | L1 | L2 | M | D1 | D2 | L1+L2 | Pump | Motor | Electric Pump |
| **U 50...-400/1-1RT** | 3 | 100 | 466 | 333 | 157 | 205 | 170 | 799 | 54 | 35 | 89 |
| **U 50...-550/1T** | 4 | 112 | 466 | 350 | 177 | 220 | 170 | 816 | 54 | 43 | 97 |
| **U 50...-750/2-2RT** | 5,5 | 132 | 759 | 400 | 197 | 256 | 300 | 1159 | 78,5 | 66 | 144,5 |
| **U 50...-1000/2T** | 7,5 | 132 | 759 | 400 | 197 | 256 | 300 | 1159 | 78,5 | 73 | 151,5 |
| **U 50...-1500/3-2RT** | 11 | 160 | 861 | 503 | 255 | 315 | 350 | 1364 | 85,5 | 120 | 205,5 |
| **U 50...-1500/3T** | 11 | 160 | 861 | 503 | 255 | 315 | 350 | 1364 | 85,5 | 120 | 205,5 |
| **U 50...-2000/4-2RT** | 15 | 160 | 943 | 503 | 255 | 315 | 350 | 1446 | 89,5 | 132 | 221,5 |
| **U 50...-2000/4T** | 15 | 160 | 943 | 503 | 255 | 315 | 350 | 1446 | 89,5 | 132 | 221,5 |
| **U 50...-2500/5-2RT** | 18,5 | 160 | 1026 | 598 | 252 | 315 | 350 | 1624 | 93,5 | 150 | 243,5 |
| **U 50...-2500/5T** | 18,5 | 160 | 1026 | 598 | 252 | 315 | 350 | 1624 | 93,5 | 150 | 243,5 |
| **U 50...-3000/6-2RT** | 22 | 180 | 1108 | 620 | 270 | 360 | 350 | 1728 | 97,5 | 205 | 302,5 |
| **U 50...-3000/6T** | 22 | 180 | 1108 | 620 | 270 | 360 | 350 | 1728 | 97,5 | 205 | 302,5 |
| **U 50...-4000/7-2RT** | 30 | 200 | 1195 | 661 | 303 | 400 | 400 | 1856 | 104,5 | 250 | 354,5 |
| **U 50...-4000/7T** | 30 | 200 | 1195 | 661 | 303 | 400 | 400 | 1856 | 104,5 | 250 | 354,5 |
| **U 50...-4000/8-2RT** | 30 | 200 | 1277 | 661 | 303 | 400 | 400 | 1938 | 108,5 | 250 | 358,5 |
| **U 50...-4000/8T** | 30 | 200 | 1277 | 661 | 303 | 400 | 400 | 1938 | 108,5 | 250 | 358,5 |
| **U 50...-5000/9-2RT** | 37 | 200 | 1359 | 661 | 303 | 400 | 400 | 2020 | 112,5 | 270 | 382,5 |
| **U 50...-5000/9T** | 37 | 200 | 1359 | 661 | 303 | 400 | 400 | 2020 | 112,5 | 270 | 382,5 |
| **U 50...-5000/10-2RT** | 37 | 200 | 1441 | 661 | 303 | 400 | 400 | 2102 | 116,5 | 270 | 386,5 |
| **U 50...-5000/10T** | 37 | 200 | 1441 | 661 | 303 | 400 | 400 | 2102 | 116,5 | 270 | 386,5 |
| **U 50...-6000/11-2RT** | 45 | 225 | 1523 | 710 | 312 | 450 | 450 | 2233 | 122,5 | 315 | 437,5 |
| **U 50...-6000/11T** | 45 | 225 | 1523 | 710 | 312 | 450 | 450 | 2233 | 122,5 | 315 | 437,5 |
| **U 50...-6000/12-2RT** | 45 | 225 | 1605 | 710 | 312 | 450 | 450 | 2315 | 126,5 | 315 | 441,5 |
| **U 50...-6000/12T** | 45 | 225 | 1605 | 710 | 312 | 450 | 450 | 2315 | 126,5 | 315 | 441,5 |

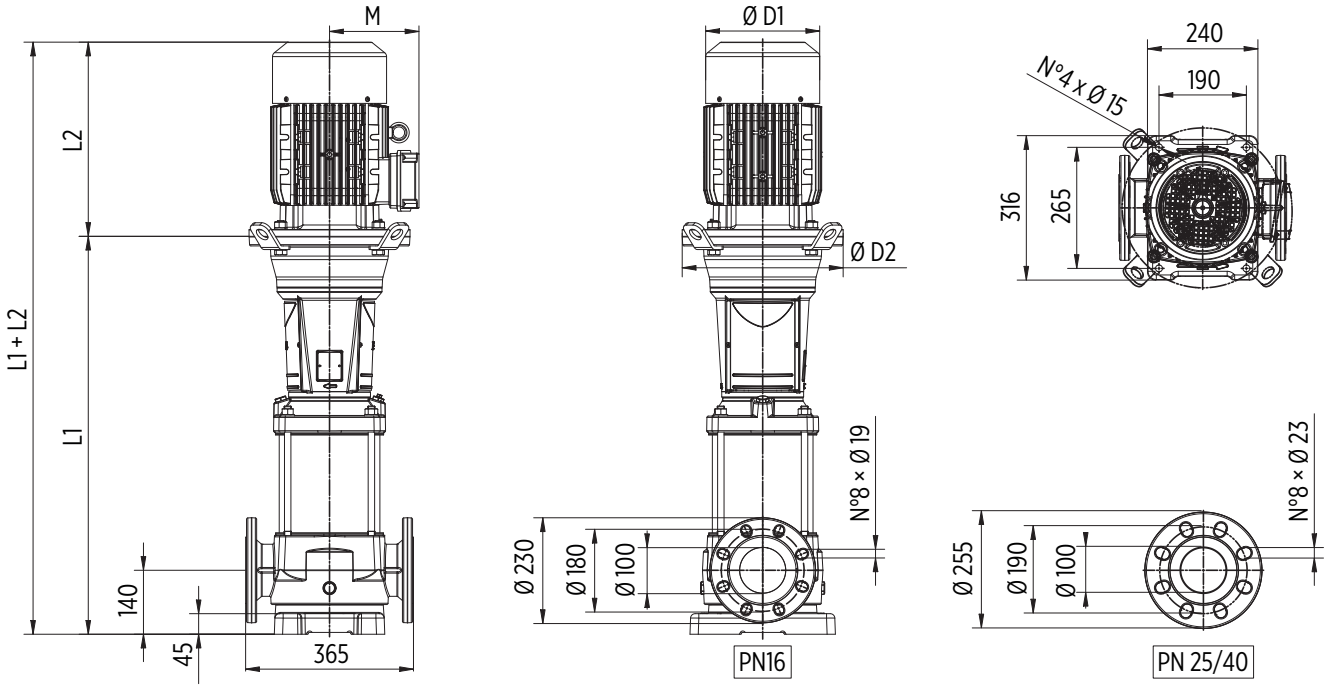


*Round flanges on body type PN25/40: the pump is supplied without counterflanges (optional accessories, including bolts and joints)*

| TYPE | MOTOR | | DIMENSIONS (mm) | | | | | | Kg | | |
|---|---|---|---|---|---|---|---|---|---|---|---|
| | kW | Dim | L1 | L2 | M | D1 | D2 | L1+L2 | Pump | Motor | Electric Pump |
| **U 75...-550/1-1RT** | 4 | 112 | 526 | 350 | 177 | 220 | 170 | 876 | 60 | 43 | 103 |
| **U 75...-750/1T** | 5,5 | 132 | 737 | 400 | 197 | 256 | 300 | 1137 | 80,5 | 66 | 146,5 |
| **U 75...-1000/2-2RT** | 7,5 | 132 | 829 | 400 | 197 | 256 | 300 | 1229 | 85 | 73 | 158 |
| **U 75...-1500/2-1RT** | 11 | 160 | 849 | 503 | 255 | 315 | 350 | 1352 | 88,5 | 120 | 208,5 |
| **U 75...-1500/2T** | 11 | 160 | 849 | 503 | 255 | 315 | 350 | 1352 | 88,5 | 120 | 208,5 |
| **U 75...-2000/3-2RT** | 15 | 160 | 941 | 503 | 255 | 315 | 350 | 1444 | 93 | 132 | 225 |
| **U 75...-2000/3-1RT** | 15 | 160 | 941 | 503 | 255 | 315 | 350 | 1444 | 93 | 132 | 225 |
| **U 75...-2500/3T** | 18,5 | 160 | 941 | 598 | 252 | 315 | 350 | 1539 | 93 | 150 | 243 |
| **U 75...-2500/4-2RT** | 18,5 | 160 | 1033 | 598 | 252 | 315 | 350 | 1631 | 97,5 | 150 | 247,5 |
| **U 75...-3000/4-1RT** | 22 | 180 | 1033 | 620 | 270 | 360 | 350 | 1653 | 97 | 205 | 302 |
| **U 75...-3000/4T** | 22 | 180 | 1033 | 620 | 270 | 360 | 350 | 1653 | 97 | 205 | 302 |
| **U 75...-4000/5-2RT** | 30 | 200 | 1131 | 661 | 303 | 400 | 400 | 1792 | 105 | 250 | 355 |
| **U 75...-4000/5-1RT** | 30 | 200 | 1131 | 661 | 303 | 400 | 400 | 1792 | 105 | 250 | 355 |
| **U 75...-4000/5T** | 30 | 200 | 1131 | 661 | 303 | 400 | 400 | 1792 | 105 | 250 | 355 |
| **U 75...-4000/6-2RT** | 30 | 200 | 1223 | 661 | 303 | 400 | 400 | 1884 | 109,5 | 250 | 359,5 |
| **U 75...-5000/6-1RT** | 37 | 200 | 1223 | 661 | 303 | 400 | 400 | 1884 | 109,5 | 270 | 379,5 |
| **U 75...-5000/6T** | 37 | 200 | 1223 | 661 | 303 | 400 | 400 | 1884 | 109,5 | 270 | 379,5 |
| **U 75...-5000/7-2RT** | 37 | 200 | 1315 | 661 | 303 | 400 | 400 | 1976 | 113,5 | 270 | 383,5 |
| **U 75...-5000/7-1RT** | 37 | 200 | 1315 | 661 | 303 | 400 | 400 | 1976 | 113,5 | 270 | 383,5 |
| **U 75...-6000/7T** | 45 | 225 | 1315 | 710 | 312 | 450 | 450 | 2025 | 116 | 315 | 431 |
| **U 75...-6000/8-2RT** | 45 | 225 | 1407 | 710 | 312 | 450 | 450 | 2117 | 120,5 | 315 | 435,5 |
| **U 75...-6000/8-1RT** | 45 | 225 | 1407 | 710 | 312 | 450 | 450 | 2117 | 120,5 | 315 | 435,5 |
| **U 75...-6000/8T** | 45 | 225 | 1407 | 710 | 312 | 450 | 450 | 2117 | 120,5 | 315 | 435,5 |

# 90 HS/HX

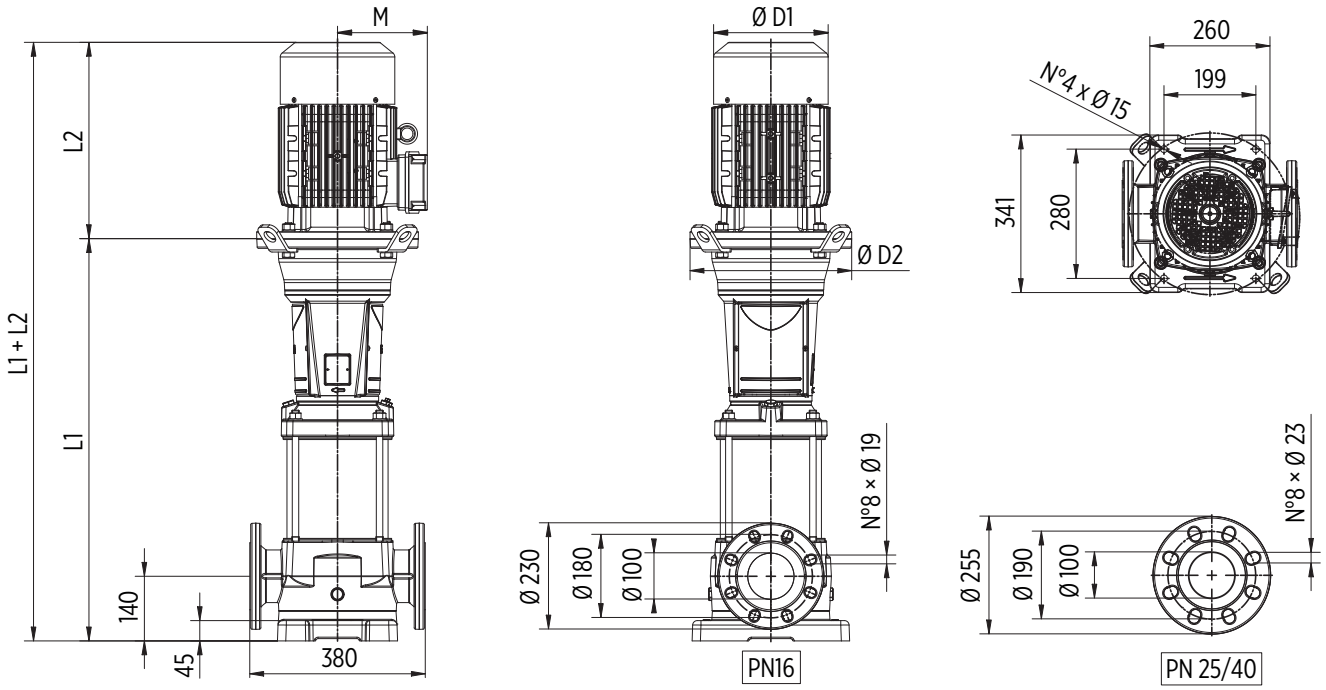


*Round flanges on body type PN25/40: the pump is supplied without counterflanges (optional accessories, including bolts and joints)*

| TYPE | MOTOR | | DIMENSIONS (mm) | | | | | | Kg | | |
|---|---|---|---|---|---|---|---|---|---|---|---|
| | kW | Dim | L1 | L2 | M | D1 | D2 | L1+L2 | Pump | Motor | Electric Pump |
| **U 90...-750/1-1RT** | 5,5 | 132 | 737 | 400 | 197 | 256 | 300 | 1137 | 82 | 66 | 148 |
| **U 90...-1000/1T** | 7,5 | 132 | 737 | 400 | 197 | 256 | 300 | 1137 | 82 | 73 | 155 |
| **U 90...-1500/2-2RT** | 11 | 160 | 849 | 503 | 255 | 315 | 350 | 1352 | 89 | 120 | 209 |
| **U 90...-2000/2T** | 15 | 160 | 849 | 503 | 255 | 315 | 350 | 1352 | 89 | 132 | 221 |
| **U 90...-2500/3-2RT** | 18,5 | 160 | 941 | 598 | 252 | 315 | 350 | 1539 | 93 | 150 | 243 |
| **U 90...-3000/3T** | 22 | 180 | 941 | 620 | 270 | 360 | 350 | 1561 | 92,5 | 205 | 297,5 |
| **U 90...-4000/4-2RT** | 30 | 200 | 1038 | 661 | 303 | 400 | 400 | 1699 | 99,5 | 250 | 349,5 |
| **U 90...-4000/4T** | 30 | 200 | 1038 | 661 | 303 | 400 | 400 | 1699 | 99,5 | 250 | 349,5 |
| **U 90...-5000/5-2RT** | 37 | 200 | 1131 | 661 | 303 | 400 | 400 | 1792 | 103 | 270 | 373 |
| **U 90...-5000/5T** | 37 | 200 | 1131 | 661 | 303 | 400 | 400 | 1792 | 103 | 270 | 373 |
| **U 90...-6000/6-2RT** | 45 | 225 | 1223 | 710 | 312 | 450 | 450 | 1933 | 109 | 315 | 424 |
| **U 90...-6000/6T** | 45 | 225 | 1223 | 710 | 312 | 450 | 450 | 1933 | 109 | 315 | 424 |

# ULTRA HS-HX Serie-Mechanical seal and bearings

| CARTRIDGE MECHANICAL SEAL | PUMP MODEL | SHAFT Ø | | STANDARD MATERIAL | OPTIONAL | | |
|---|---|---|---|---|---|---|---|
| | | | | | V | 2 | 2V |
| | U18-100/1T, U18-200/2T, U18-300/3T, U18-400/4T, U18-550/5T, U18-750/6T, U18-750/7T, U18-1000/8T, U18-1000/9T, U18-1500/10T, U18-1500/11T, U18-1500/12T, U18-1500/13T, U18-1500/14T, U18-2000/15T, U18-2000/16T, U18-2000/17T, U22-150/1T, U22-300/2T, U22-400/3T, U22-550/4T, U22-750/5T, U22-1000/6T, U22-1000/7T, U22-1500/8T, U22-1500/9T, U22-1500/10T, U22-2000/11T, U22-2000/12T, U22-2000/13T | 16mm | ***Rotating face***<br>***Stationary face***<br>***Elastomer*** | SiC<br>Graphite<br>EPDM | SiC<br>Graphite<br>FKM | SiC<br>SiC<br>EPDM | SiC<br>SiC<br>FKM |
| | U35-300/1T, U35-550/2-2RT, U35-550/2-1RT, U35-750/2T, U35-750/3-2RT, U35-1000/3-1RT, U35-1000/3T, U35-1000/4-2RT, U35-1500/4-1RT, U35-1500/4T, U35-1500/5-2RT, U35-1500/5-1RT, U35-2000/5T, U35-2000/6-2RT, U35-2000/6-1RT, U35-2000/6T, U35-2000/7-2RT, U35-2000/7-1RT, U35-2500/7T, U35-2500/8-2RT, U35-2500/8-1RT, U35-2500/8T, U35-3000/9-2RT, U35-3000/9-1RT, U35-3000/9T, U35-3000/10-2RT, U35-3000/10-1RT, U35-4000/10T, U35-4000/11-2RT, U35-4000/11-1RT, U35-4000/11T, U35-4000/12-2RT, U35-4000/12-1RT, U35-4000/12T, U35-4000/13-2RT, U35-4000/13-1RT, U35-4000/13T, U50-400/1-1RT, U50-550/1T, U50-750/2-2RT, U50-1000/2T, U50-1500/3-2RT, U50-1500/3T, U50-2000/4-2RT, U50-2000/4T, U50-2500/5-2RT, U50-2500/5T, U50-3000/6-2RT, U50-3000/6T, U50-4000/7-2RT, U50-4000/7T, U50-4000/8-2RT, U50-4000/8T, U50-5000/9-2RT, U50-5000/9T, U50-5000/10-2RT, U50-5000/10T, U50-6000/11-2RT, U50-6000/11T, U50-6000/12-2RT, U50-6000/12T, U75-550/1-1RT, U75-750/1T, U75-1000/2-2RT, U75-1500/2-1RT, U75-1500/2T, U75-2000/3-2RT, U75-2000/3-1RT, U75-2500/3T, U75-2500/4-2RT, U75-3000/4-1RT, U75-3000/4T, U75-4000/5-2RT, U75-4000/5-1RT, U75-4000/5T, U75-4000/6-2RT, U75-5000/6-1RT, U75-5000/6T, U75-5000/7-2RT, U75-5000/7-1RT, U75-6000/7T, U75-6000/8-2RT, U75-6000/8-1RT, U75-6000/8T, U90-750/1-1RT, U90-1000/1T, U90-1500/2-2RT, U90-2000/2T, U90-2500/3-2RT, U90-3000/3T, U90-4000/4-2RT, U90-4000/4T, U90-5000/5-2RT, U90-5000/5T, U90-6000/6-2RT, U90-6000/6T | 22mm / Balanced seal | ***Rotating face***<br>***Stationary face***<br>***Elastomer*** | SiC<br>Graphite<br>EPDM | SiC<br>Graphite<br>FKM | SiC<br>SiC<br>EPDM | SiC<br>SiC<br>FKM |

| BEARINGS | PUMP MODEL | PUMP THRUST BEARING | | MOTOR BEARING | |
|---|---|---|---|---|---|
| | U18-100/1T, U22-150/1T | - | - | 6204-ZZ C3 | 6204-ZZ C3 |
| | U18-200/2T, U18-300/3T, U22-300/2T, U35-300/1T | - | - | 6205-ZZ C3 | 6205-ZZ C3 |
| | U18-400/4T, U18-550/5T, U22-400/3T, U22-550/4T, U35-550/2-2RT, U35-550/2-1RT, U50-400/1-1RT, U50-550/1T, U75-550/1-1RT | - | - | 6206-ZZ C3 | 6206-ZZ C3 |
| | U18-750/6T, U18-750/7T, U18-1000/8T, U18-1000/9T, U22-750/5T, U22-1000/6T, U22-1000/7T, U35-750/2T, U35-750/3-2RT, U35-1000/3-1RT, U35-1000/3T, U35-1000/4-2RT, U50-750/2-2RT, U50-1000/2T, U75-750/1T, U75-1000/2-2RT, U90-750/1-1RT, U90-1000/1T | 6212 2Z | - | 6208-ZZ C3 | 6208-ZZ C3 |
| | U18-1500/10T, U18-1500/11T, U18-1500/12T, U18-1500/13T, U18-1500/14T, U18-2000/15T, U18-2000/16T, U18-2000/17T, U22-1500/8T, U22-1500/9T, U22-1500/10T, U22-2000/11T, U22-2000/12T, U22-2000/13T, U22-2000/14T, U22-2500/15T, U22-2500/16T, U22-2500/17T, U35-1500/4-1RT, U35-1500/4T, U35-1500/5-2RT, U35-1500/5-1RT, U50-1500/3-2RT, U50-1500/3T, U75-1500/2-1RT, U75-1500/2T, U90-1500/2-2RT | | | 6309-ZZ C3 | 6309-ZZ C3 |
| | U35-2000/5T, U35-2000/6-2RT, U35-2000/6-1RT, U35-2000/6T, U35-2000/7-2RT, U35-2000/7-1RT, U35-2500/7T, U35-2500/8-2RT, U35-2500/8-1RT, U35-2500/8T, U50-2000/4-2RT, U50-2000/4T, U50-2500/5-2RT, U50-2500/5T, U75-2000/3-2RT, U75-2000/3-1RT, U75-2500/3T, U75-2500/4-2RT, U90-2000/2T, U90-2500/3-2RT | 6212 2Z | 7212 BEP | | |
| | U35-3000/9-2RT, U35-3000/9-1RT, U35-3000/9T, U35-3000/10-2RT, U35-3000/10-1RT, U50-3000/6-2RT, U50-3000/6T, U75-3000/4-1RT, U75-3000/4T, U90-3000/3T | | | 6311-ZZ C3 | 6311-ZZ C3 |
| | U35-4000/10T, U35-4000/11-2RT, U35-4000/11-1RT, U35-4000/11T, U35-4000/12-2RT, U35-4000/12-1RT, U35-4000/12T, U35-4000/13-2RT, U35-4000/13-1RT, U35-4000/13T, U50-4000/7-2RT, U50-4000/7T, U50-4000/8-2RT, U50-4000/8T, U50-5000/9-2RT, U50-5000/9T, U50-5000/10-2RT, U50-5000/10T, U75-4000/5-2RT, U75-4000/5-1RT, U75-4000/5T, U75-4000/6-2RT, U75-5000/6-1RT, U75-5000/6T, U75-5000/7-2RT, U75-5000/7-1RT, U90-4000/4-2RT, U90-4000/4T, U90-5000/5-2RT, U90-5000/5T | 6214 2Z | 7214 BEP | 6312-ZZ C3 | 6312-ZZ C3 |
| | U50-6000/11-2RT, U50-6000/11T, U50-6000/12-2RT, U50-6000/12T, U75-6000/7T, U75-6000/8-2RT, U75-6000/8-1RT, U75-6000/8T, U90-6000/6-2RT, U90-6000/6T | | | 6313-ZZ C3 | 6313-ZZ C3 |

# ULTRA V/L/H + VSD

**Vertical booster pump with variable speed drive**

## ULTRA V

EPIC / EPIC-A IPFC

## ULTRA L

EPIC / EPIC-A IPFC

## ULTRA H

IPFC

**DESCRIPTION**
Vertical pump of ULTRA series provided with variable speed drive EPIC, EPIC-A or IPFC. This booster pump assures a desired pressure regardless of changes on flow demand making it suitable for low or missing pressure in residential systems and industrial applications. It is required the installation of a membrane tank downstream the system.

**FEATURES**
- EPIC, EPIC-A or IPFC variable speed drive
- Three-phase vertical pump of ULTRA series
- Pressure sensor wired to the vsd
- Cable with plug for EPIC vsd only

**FUNCTIONING**
If the pressure in the network drops the pump will starts and gradually speeds up to provide with the set pressure. When the water demand decreases, the pressure will rise causing the pump speed to slow down and eventually to stop the pump if demand ceases. The pump will remain on standby waiting to start at the next water demand.

**SELECTION**
The next table shows the vertical ULTRA pump models available for the assembly with EPIC, EPIC-A or IPFC. For pumps longer than 1.4m, IPFC is not assembled onto the motor fan cover but is supplied with a wall-mounting kit.
Consult the catalog at the ULTRA series for pump specifics and characteristic curves.

**U3SL /A 100/5 T -304 3×400-50**

- power supply
- VSD model (only for EPIC-A and IPFC)
- VSD type
  - **/E** EPIC
  - **/A** EPIC-A
  - **/I** IPFC

| 3~ PUMP | | | | | | | | VSD TYPE | | | |
|---|---|---|---|---|---|---|---|---|---|---|---|
| TYPE | | VERSION | | | | | | Power supply | | | |
| | | V | SV | L | SL/SLX | LG | SLG/ SLGX | 1~230V | | 3~400V | |
| U 3 | 100/5T | ■ | ■ | ■ | ■ | - | - | EPIC | IPFC 109 | EPIC-A 304 | IPFC 306 |
| | 120/6T | ■ | ■ | ■ | ■ | - | - | | | | |
| | 150/7T | ■ | ■ | ■ | ■ | - | - | | | | |
| | 180/8T | ■ | ■ | ■ | ■ | - | - | | | | |
| | 200/9T | ■ | ■ | ■ | ■ | - | - | | | | |
| | 250/10T | ■ | ■ | ■ | ■ | - | - | | IPFC 114 | EPIC-A 306 | |
| | 280/11T | ■ | ■ | ■ | ■ | - | - | | | | |
| | 300/12T | ■ | ■ | ■ | ■ | - | - | - | | | |
| | 350/14T | - | - | - | - | - | ■ | | | | |
| | 380/16T | - | - | - | - | - | ■ | | | EPIC-A 309 | IPFC 309 |
| | 400/18T | - | - | - | - | - | ■ | | - | | |
| | 450/20T | - | - | - | - | - | ■ | | | - | |
| U 5 | 120/4T | ■ | ■ | ■ | ■ | - | - | EPIC | IPFC 109 | EPIC-A 304 | IPFC 306 |
| | 150/5T | ■ | ■ | ■ | ■ | - | - | | | | |
| | 180/6T | ■ | ■ | ■ | ■ | - | - | | | | |
| | 200/7T | ■ | ■ | ■ | ■ | - | - | | | | |
| | 250/8T | ■ | ■ | ■ | ■ | - | - | | IPFC 114 | EPIC-A 306 | |
| | 280/9T | ■ | ■ | ■ | ■ | - | - | - | | | |
| | 300/10T | ■ | ■ | ■ | ■ | - | - | | | | |
| | 350/11T | ■ | ■ | ■ | ■ | - | - | | | | |
| | 380/12T | ■ | ■ | ■ | ■ | - | - | | - | EPIC-A 309 | IPFC 309 |
| | 400/14T | - | - | - | - | - | ■ | | | | |
| | 450/16T | - | - | - | - | - | ■ | | | - | |
| | 550/18T | - | - | - | - | - | ■ | | | | IPFC 311 |
| | 600/20T | - | - | - | - | - | ■ | | | | |
| U 7 | 180/4T | ■ | ■ | ■ | ■ | - | - | EPIC | IPFC 109 | EPIC-A 304 | IPFC 306 |
| | 250/5T | ■ | ■ | ■ | ■ | - | - | | IPFC 114 | EPIC-A 306 | |
| | 300/6T | ■ | ■ | ■ | ■ | - | - | - | | | |
| | 350/7T | ■ | ■ | ■ | ■ | - | - | | | | |
| | 400/8T | ■ | ■ | ■ | ■ | - | - | | - | EPIC-A 309 | IPFC 309 |
| | 450/9T | ■ | ■ | ■ | ■ | - | - | | | - | |
| | 550/10T | ■ | ■ | ■ | ■ | - | - | | | | |
| | 750/12T | - | - | - | - | - | ■ | | | | IPFC 314 |
| | 800/14T | - | - | - | - | - | ■ | | | | |
| | 900/16T | - | - | - | - | - | ■ | | | | |
| | 950/18T | - | - | - | - | - | ■ | | | | |
| | 1000/20T | - | - | - | - | - | ■ | | | | IPFC 318 |
| U 9 | 200/4T | ■ | ■ | ■ | ■ | - | - | EPIC | IPFC 109 | EPIC-A 304 | IPFC 306 |
| | 250/5T | ■ | ■ | ■ | ■ | - | - | - | IPFC 114 | EPIC-A 306 | |
| | 300/6T | ■ | ■ | ■ | ■ | - | - | | | | |
| | 400/7T | ■ | ■ | ■ | ■ | - | - | | - | EPIC-A 309 | IPFC 309 |
| | 450/8T | ■ | ■ | ■ | ■ | - | - | | | - | |
| | 500/9T | ■ | ■ | ■ | ■ | - | - | | | | |
| | 550/10T | ■<br>- | -<br>■ | ■<br>- | -<br>■ | - | - | | | | IPFC 311 |
| | 750/12T | - | - | - | - | - | ■ | | | | IPFC 314 |
| | 800/14T | - | - | - | - | - | ■ | | | | |
| | 900/16T | - | - | - | - | - | ■ | | | | IPFC 318 |
| | 950/18T | - | - | - | - | - | ■ | | | | |
| | 1000/20T | - | - | - | - | - | ■ | | | | |

# ULTRA+VSD

| 3~ PUMP | | | | | | | | | VSD TYPE | | |
|---|---|---|---|---|---|---|---|---|---|---|---|
| TYPE | | VERSION | | | | | | | Power supply | | |
| | | V | SV | L | SL/SLX | LG | HS | HX | 1~230V | 3~400V | |
| U 18 | 100/1T | - | - | - | - | - | - | ■ | IPFC 109 | - | IPFC 306 |
| | 200/2T | - | - | - | - | - | - | ■ | | | |
| | 300/3T | - | - | - | - | - | - | ■ | IPFC 114 | | |
| | 250/3T | ■ | ■ | ■ | ■ | - | - | - | | EPIC-A 306 | |
| | 400/4T | - | - | - | - | - | - | ■ | | - | |
| | | ■ | ■ | ■ | ■ | | | - | - | EPIC-A 309 | IPFC 309 |
| | 450/5T | ■ | ■ | ■ | ■ | - | - | - | | - | |
| | 550/5T | - | - | - | - | - | - | ■ | | | |
| | 550/6T | ■ | ■ | ■ | ■ | - | - | - | | | IPFC 311 |
| | 750/6T | - | - | - | - | - | - | ■ | | | |
| | 750/7T | - | - | - | - | - | - | ■ | | | |
| | 750/8T | ■ | ■ | ■ | ■ | - | - | - | | | IPFC 314 |
| | 1000/8T | - | - | - | - | - | - | ■ | | | |
| | 1000/9T | - | - | - | - | - | - | ■ | | | |
| | 900/9T | ■ | ■ | ■ | ■ | - | - | - | | | IPFC 318 |
| | 920/10T | - | - | - | - | ■ | - | - | | | |
| | 1000/11T | - | - | - | - | ■ | - | - | | | |
| | 1500/10T | - | - | - | - | - | - | ■ | | | |
| | 1500/11T | - | - | - | - | - | - | ■ | | | |
| | 1500/12T | - | - | - | - | - | - | ■ | | | IPFC 325 |
| | 1500/13T | - | - | - | - | - | - | ■ | | | |
| | 1500/14T | - | - | - | - | - | - | ■ | | | |
| | 2000/15T | - | - | - | - | - | - | ■ | | | |
| | 2000/16T | - | - | - | - | - | - | ■ | | | |
| | 2000/17T | - | - | - | - | - | - | ■ | | | IPFC 330 |
| U 22 | 200/1T | - | - | - | - | - | - | ■ | IPFC 109 | - | IPFC 306 |
| | 300/2T | - | - | - | - | - | - | ■ | IPFC 114 | | |
| | 400/3T | - | - | - | - | - | - | ■ | | | |
| | 550/4T | - | - | - | - | - | - | ■ | - | | IPFC 309 |
| | 750/5T | - | - | - | - | - | - | ■ | | | IPFC 311 |
| | 1000/6T | - | - | - | - | - | - | ■ | | | IPFC 314 |
| | 1000/7T | - | - | - | - | - | - | ■ | | | IPFC 318 |
| | 1500/8T | - | - | - | - | - | - | ■ | | | |
| | 1500/9T | - | - | - | - | - | - | ■ | | | IPFC 325 |
| | 1500/10T | - | - | - | - | - | - | ■ | | | |
| | 2000/11T | - | - | - | - | - | - | ■ | | | |
| | 2000/12T | - | - | - | - | - | - | ■ | | | |
| | 2000/13T | - | - | - | - | - | - | ■ | | | IPFC 330 |
| | 2000/14T | - | - | - | - | - | - | ■ | | | |

| 3~ PUMP | | | | | | | | | VSD TYPE | |
|---|---|---|---|---|---|---|---|---|---|---|
| TYPE | | VERSION | | | | | | | Power supply | |
| | | V | SV | L | SL/SLX | LG | HS | HX | 1~230V | 3~400V |
| U 35 | 300/1T | - | - | - | - | - | ■ | ■ | IPFC 114 | IPFC 306 |
| | 550/2-2RT | - | - | - | - | - | ■ | ■ | - | IPFC 309 |
| | 550/2-1RT | - | - | - | - | - | ■ | ■ | | |
| | 750/2T | - | - | - | - | - | ■ | ■ | | IPFC 311 |
| | 750/3-2RT | - | - | - | - | - | ■ | ■ | | |
| | 1000/3-1RT | - | - | - | - | - | ■ | ■ | | IPFC 314 |
| | 1000/3T | - | - | - | - | - | ■ | ■ | | |
| | 1000/4-2RT | - | - | - | - | - | ■ | ■ | | IPFC 318 |
| | 1500/4-1RT | - | - | - | - | - | ■ | ■ | | |
| | 1500/4T | - | - | - | - | - | ■ | ■ | | IPFC 325 |
| | 1500/5-2RT | - | - | - | - | - | ■ | ■ | | |
| | 1500/5-1RT | - | - | - | - | - | ■ | ■ | | |
| | 2000/5T | - | - | - | - | - | ■ | ■ | | |
| | 2000/6-2RT | - | - | - | - | - | ■ | ■ | | |
| | 2000/6-1RT | - | - | - | - | - | ■ | ■ | | IPFC 330 |
| | 2000/6T | - | - | - | - | - | ■ | ■ | | |
| | 2000/7-2RT | - | - | - | - | - | ■ | ■ | | |
| | 2000/7-1RT | - | - | - | - | - | ■ | ■ | | |
| U 50 | 400/1-1RT | - | - | - | - | - | ■ | ■ | IPFC 114 | IPFC 306 |
| | 550/1T | - | - | - | - | - | ■ | ■ | - | IPFC 309 |
| | 750/2-2RT | - | - | - | - | - | ■ | ■ | | IPFC 311 |
| | 1000/2T | - | - | - | - | - | ■ | ■ | | IPFC 318 |
| | 1500/3-2RT | - | - | - | - | - | ■ | ■ | | |
| | 1500/3T | - | - | - | - | - | ■ | ■ | | IPFC 325 |
| | 2000/4-2RT | - | - | - | - | - | ■ | ■ | | |
| | 2000/4T | - | - | - | - | - | ■ | ■ | | IPFC 330 |
| | 2500/5-2RT | - | - | - | - | - | ■ | ■ | | - |
| | 2500/5T | - | - | - | - | - | ■ | ■ | | |
| | 3000/6-2RT | - | - | - | - | - | ■ | ■ | | |
| | 3000/6T | - | - | - | - | - | ■ | ■ | | |
| | 4000/7-2RT | - | - | - | - | - | ■ | ■ | | |
| U 75 | 550/1-1RT | - | - | - | - | - | ■ | ■ | - | IPFC 309 |
| | 750/1T | - | - | - | - | - | ■ | ■ | | IPFC 311 |
| | 1000/2-2RT | - | - | - | - | - | ■ | ■ | | IPFC 318 |
| | 1500/2-1RT | - | - | - | - | - | ■ | ■ | | |
| | 1500/2T | - | - | - | - | - | ■ | ■ | | IPFC 325 |
| | 2000/3-2RT | - | - | - | - | - | ■ | ■ | | |
| | 2000/3-1RT | - | - | - | - | - | ■ | ■ | | IPFC 330 |
| | 2500/3T | - | - | - | - | - | ■ | ■ | | - |
| | 2500/4-2RT | - | - | - | - | - | ■ | ■ | | |
| | 3000/4-1RT | - | - | - | - | - | ■ | ■ | | |
| | 3000/4T | - | - | - | - | - | ■ | ■ | | |
| | 4000/5-2RT | - | - | - | - | - | ■ | ■ | | |
| U 90 | 750/1-1RT | - | - | - | - | - | ■ | ■ | - | IPFC 311 |
| | 1000/1T | - | - | - | - | - | ■ | ■ | | IPFC 318 |
| | 1500/2-2RT | - | - | - | - | - | ■ | ■ | | IPFC 325 |
| | 2000/2T | - | - | - | - | - | ■ | ■ | | IPFC 330 |

Pentax®

WATER PUMPS

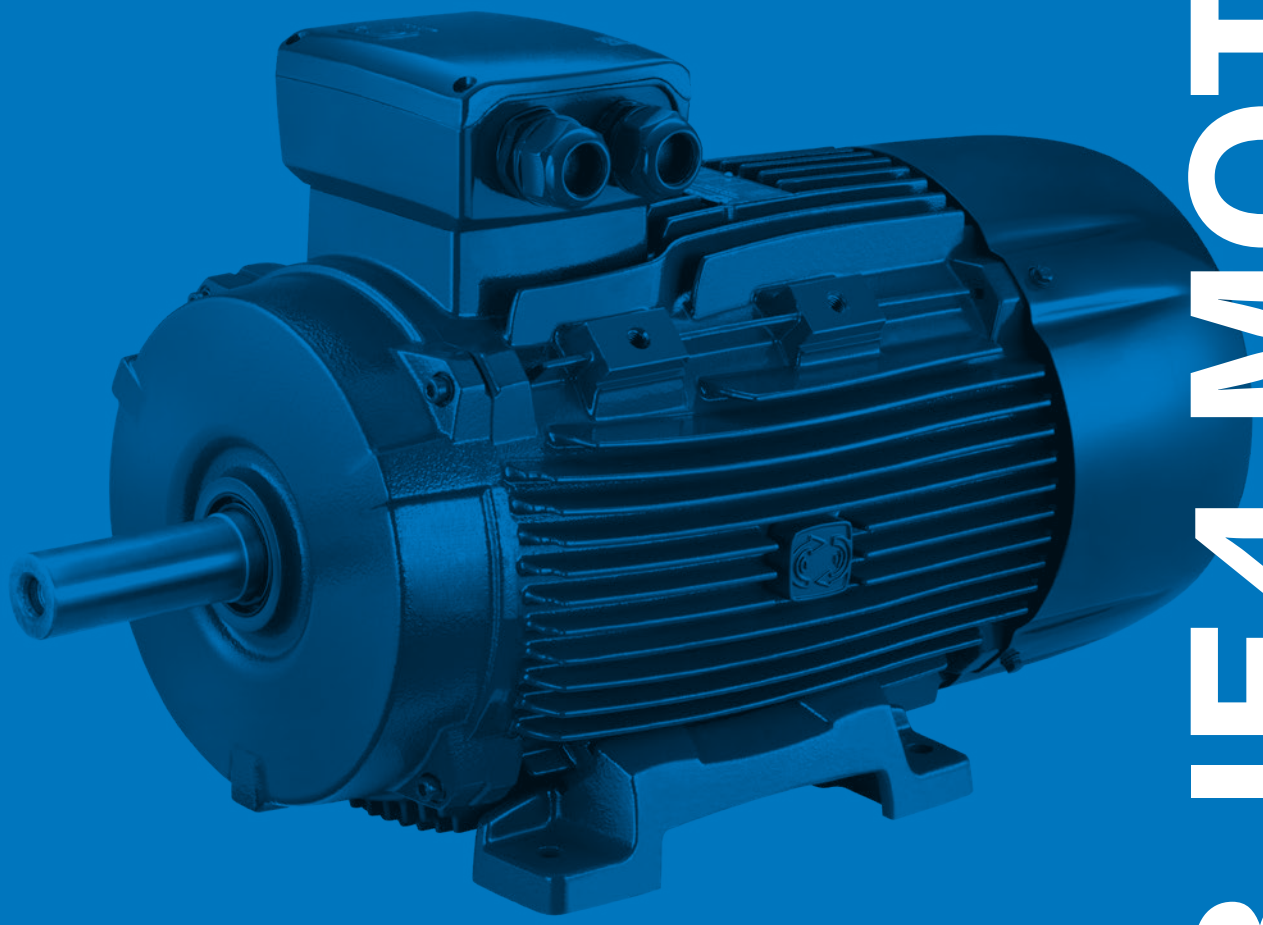

# IE3-IE4 MOTORS

# 80-132 (0,75 kW-7,5 kW)

| Construction features | |
|---|---|
| **Frame** | aluminum alloy |
| **Multiple voltage/ Multi-frequency** | 50/60 Hz |
| **Duty service** | S1 continuous |
| **Winding** | tropicalized suitable for inverter power supply |
| **ATEX (dust and gas)** | version available:<br>II 3G Ex nA IIB T4 Gc<br>II 3D Ex tc IIIB T125°C Dc |

| Motor | |
|---|---|
| **Motor** | closed and externally ventilated |
| **Insulation class** | F (on request H) |
| **Protection degree** | IPX5 (on request IP56, IP66, IP67) |
| **Efficiency class** | IE3-IE4, IEC60034-30-1 |

## VOLTAGES AND FREQUENCIES TOLERANCE

Data at 400V - 50Hz

| | | V | |
|---|---|---|---|
| SIZE | Hz | △ | Y |
| **80-112** | 50 ±5% | 230 | 400 |
| | | 220 | 380 |
| | | 240 | 415 |

# 160-355 (11 kW-315 kW)

## Construction features

| | |
|---|---|
| **Frame** | cast iron |
| **Multiple voltage/ Multi-frequency** | 50/60 Hz |
| **Duty service** | S1 continuous |
| **Winding** | tropicalized and reinforced insulation for inverter power supply (P ⩾110kW we recommend to order the motor with insulated bearings option). Windings with PTC (n° 3) thermistor as standard. |
| **ATEX (dust and gas)** | version available:<br>II 3G Ex nA IIB T4 Gc<br>II 3D Ex tc IIIB T125°C Dc |

## Motor

| | |
|---|---|
| **Motor** | closed and externally ventilated |
| **Insulation class** | F (on request H) |
| **Protection degree** | IPX5 (on request IP56, IP66, IP67) |
| **Efficiency class** | IE3-IE4, IEC60034-30-1 |

## VOLTAGES AND FREQUENCIES TOLERANCE

Data at 400V - 50Hz

| | | V | |
|---|---|---|---|
| SIZE | Hz | △ | Y |
| 132-355 | 50 ±5% | 400 | 690 |
| | | 380 | 660 |
| | | 415 | 720 |

| TYPE | kW | HP | rpm | In (A) | Is (A) | Is In | Cn (Nm) | Cs (Nm) | Cs Cn | Cmax (Nm) | Cmax Cn |
|---|---|---|---|---|---|---|---|---|---|---|---|
| **80A-2** | 0,75 | 1 | 2892 | 1,74 | 11,84 | 6,8 | 2,48 | 8,60 | 3,5 | 9,18 | 3,7 |
| **80B-2** | 1,1 | 1,5 | 2885 | 2,26 | 16,74 | 7,4 | 3,64 | 10,90 | 3,0 | 12,74 | 3,5 |
| **90S-2** | 1,5 | 2 | 2902 | 3,26 | 25,07 | 7,7 | 4,93 | 19,12 | 3,9 | 18,74 | 3,8 |
| **90L-2** | 2,2 | 3 | 2918 | 5,02 | 38,59 | 7,7 | 7,35 | 30,97 | 4,2 | 30,44 | 4,1 |
| **100L-2** | 3 | 4 | 2903 | 6,09 | 48,24 | 7,9 | 9,87 | 35,19 | 3,6 | 40,74 | 4,1 |
| **112M-2** | 4 | 5,5 | 2943 | 7,56 | 74,38 | 9,8 | 12,97 | 45,92 | 3,5 | 61,86 | 4,8 |
| **132SA-2** | 5,5 | 7,5 | 2940 | 10,14 | 70,59 | 7,0 | 17,87 | 37,70 | 2,1 | 35,79 | 2,0 |
| **132SB-2** | 7,5 | 10 | 2925 | 13,35 | 95,00 | 7,1 | 24,49 | 53,50 | 2,2 | 78,50 | 3,2 |
| **160MA-2** | 11 | 15 | 2937 | 19,72 | 123,05 | 6,2 | 35,77 | 73,32 | 2,1 | 100,15 | 2,8 |
| **160MB-2** | 15 | 20 | 2938 | 26,29 | 150,23 | 5,7 | 48,76 | 95,08 | 2,0 | 121,89 | 2,5 |
| **160L-2** | 18,5 | 25 | 2942 | 32,15 | 192,92 | 6,0 | 60,05 | 124,31 | 2,1 | 179,00 | 2,1 |
| **180M-2** | 22 | 30 | 2950 | 37,53 | 304,03 | 8,1 | 71,22 | 163,81 | 2,3 | 220,80 | 3,1 |
| **200LA-2** | 30 | 40 | 2940 | 51,51 | 386,34 | 7,5 | 97,45 | 224,13 | 2,3 | 223,37 | 2,3 |
| **200LB-2** | 37 | 50 | 2960 | 63,26 | 474,46 | 7,5 | 119,38 | 274,56 | 2,3 | 275,49 | 2,3 |
| **225M-2** | 45 | 60 | 2960 | 76,69 | 582,87 | 7,6 | 145,19 | 333,93 | 2,3 | 332,80 | 2,3 |
| **250M-2** | 55 | 75 | 2970 | 94,39 | 707,92 | 7,5 | 176,85 | 406,76 | 2,3 | 406,76 | 2,3 |
| **280S-2** | 75 | 100 | 2970 | 125,82 | 868,14 | 6,9 | 241,16 | 530,56 | 2,2 | 554,67 | 2,3 |
| **280M-2** | 90 | 125 | 2970 | 150,67 | 1069,73 | 7,1 | 289,39 | 636,67 | 2,2 | 665,61 | 2,3 |
| **315S-2** | 110 | 150 | 2970 | 183,76 | 1304,72 | 7,1 | 353,70 | 707,41 | 2,0 | 778,15 | 2,2 |
| **315MA-2** | 132 | 180 | 2970 | 220,06 | 1562,41 | 7,1 | 424,44 | 848,89 | 2,0 | 933,78 | 2,2 |
| **315LA-2** | 160 | 215 | 2970 | 263,53 | 1871,07 | 7,1 | 514,48 | 1028,96 | 2,0 | 1131,85 | 2,2 |
| **315LB-2** | 200 | 270 | 2970 | 328,73 | 2333,99 | 7,1 | 643,10 | 1286,20 | 2,0 | 1414,81 | 2,2 |
| **355M-2** | 250 | 335 | 2980 | 410,91 | 2917,49 | 7,1 | 801,17 | 1602,35 | 2,0 | 1762,58 | 2,2 |
| **355L-2** | 315 | 423 | 2980 | 517,75 | 3676,03 | 7,1 | 1009,48 | 2018,96 | 2,0 | 2220,86 | 2,2 |

| TYPE | η% | | | | Fatt. pot. cos φ | | | ΔT (°C) | LwA (dB) | J Kgm2 | Kg |
|---|---|---|---|---|---|---|---|---|---|---|---|
| | 100% | IE | 75% | 50% | 100% | 75% | 50% | | | | |
| **80A-2** | 80,9 | IE3 | 79,6 | 76,4 | 0,770 | 0,700 | 0,566 | 35 | 65 | 0,00158 | 17 |
| **80B-2** | 84,5 | IE3 | 84,7 | 82,8 | 0,830 | 0,770 | 0,652 | 41 | 65 | 0,00185 | 18 |
| **90S-2** | 85,3 | IE3 | 83,4 | 81,3 | 0,786 | 0,726 | 0,582 | 43 | 71 | 0,00383 | 23 |
| **90L-2** | 86,2 | IE3 | 87,0 | 84,9 | 0,730 | 0,675 | 0,498 | 48 | 71 | 0,00726 | 26 |
| **100L-2** | 87,1 | IE3 | 87,3 | 84,9 | 0,812 | 0,766 | 0,618 | 49 | 75 | 0,01439 | 35 |
| **112M-2** | 89,6 | IE3 | 89,8 | 88,9 | 0,856 | 0,805 | 0,665 | 44 | 77 | 0,01663 | 43 |
| **132SA-2** | 91,0 | IE3 | 89,7 | 87,4 | 0,860 | 0,840 | 0,761 | 48 | 78 | 0,03300 | 66 |
| **132SB-2** | 91,6 | IE3 | 92,4 | 92,9 | 0,885 | 0,850 | 0,760 | 60 | 78 | 0,03960 | 73 |
| **160MA-2** | 91,4 | IE3 | 91,2 | 89,7 | 0,881 | 0,864 | 0,812 | 49 | 81 | 0,04976 | 120 |
| **160MB-2** | 92,0 | IE3 | 92,6 | 91,8 | 0,895 | 0,877 | 0,841 | 61 | 81 | 0,06587 | 132 |
| **160L-2** | 93,0 | IE3 | 93,7 | 93,0 | 0,893 | 0,875 | 0,827 | 58 | 81 | 0,07260 | 150 |
| **180M-2** | 94,0 | IE3 | 93,9 | 93,0 | 0,900 | 0,880 | 0,870 | 41 | 83 | 0,09900 | 205 |
| **200LA-2** | 93,4 | IE3 | 94,4 | 90,7 | 0,900 | 0,881 | 0,820 | 65 | 84 | 0,16368 | 250 |
| **200LB-2** | 93,8 | IE3 | 93,6 | 90,2 | 0,900 | 0,887 | 0,840 | 65 | 84 | 0,18348 | 270 |
| **225M-2** | 94,1 | IE3 | 93,9 | 90,7 | 0,900 | 0,878 | 0,816 | 65 | 86 | 0,30756 | 315 |
| **250M-2** | 94,5 | IE3 | 92,6 | 88,5 | 0,890 | 0,872 | 0,825 | 65 | 89 | 0,41184 | 420 |
| **280S-2** | 95,6 | IE4 | 93,7 | 89,5 | 0,900 | 0,896 | 0,875 | 55 | 91 | 0,76428 | 550,8 |
| **280M-2** | 95,8 | IE4 | 95,7 | 93,7 | 0,900 | 0,894 | 0,857 | 65 | 91 | 0,89100 | 625 |
| **315S-2** | 96,0 | IE4 | 95,9 | 93,9 | 0,900 | 0,894 | 0,857 | 65 | 92 | 1,55760 | 968 |
| **315MA-2** | 96,2 | IE4 | 96,2 | 94,2 | 0,900 | 0,894 | 0,857 | 65 | 92 | 2,40240 | 1100 |
| **315LA-2** | 96,3 | IE4 | 96,2 | 94,2 | 0,910 | 0,904 | 0,867 | 65 | 92 | 2,74560 | 1160,5 |
| **315LB-2** | 96,5 | IE4 | 96,5 | 94,5 | 0,910 | 0,904 | 0,867 | 65 | 92 | 3,14160 | 1221 |
| **355M-2** | 96,5 | IE4 | 96,5 | 94,5 | 0,910 | 0,904 | 0,867 | 65 | 100 | 3,96000 | 2090 |
| **355L-2** | 96,5 | IE4 | 96,5 | 94,5 | 0,910 | 0,904 | 0,867 | 65 | 100 | 4,62000 | 2530 |

| TYPE | kW | HP | rpm | In (A) | Is (A) | Is In | Cn (Nm) | Cs (Nm) | Cs Cn | Cmax (Nm) | Cmax Cn |
|---|---|---|---|---|---|---|---|---|---|---|---|
| **80B-4** | 0,75 | 1 | 1426 | 1,87 | 11,24 | 6,0 | 5,01 | 15,52 | 3,1 | 15,41 | 3,1 |
| **90S-4** | 1,1 | 1,5 | 1436 | 2,61 | 16,60 | 6,4 | 7,36 | 24,26 | 3,3 | 24,70 | 3,4 |
| **90L-4** | 1,5 | 2 | 1427 | 3,59 | 24,34 | 6,8 | 10,03 | 41,06 | 4,1 | 38,49 | 3,8 |
| **100LA-4** | 2,2 | 3 | 1438 | 4,77 | 33,83 | 7,1 | 14,74 | 52,18 | 3,5 | 54,71 | 3,7 |
| **100LB-4** | 3 | 4 | 1447 | 6,48 | 49,52 | 7,6 | 19,76 | 69,03 | 3,5 | 77,85 | 3,9 |
| **112M-4** | 4 | 5,5 | 1460 | 8,79 | 62,51 | 7,1 | 26,17 | 83,57 | 3,2 | 108,56 | 4,1 |
| **132S-4** | 5,5 | 7,5 | 1454 | 10,64 | 68,01 | 6,4 | 36,12 | 75,86 | 2,1 | 101,15 | 2,8 |
| **132M-4** | 7,5 | 10 | 1460 | 14,39 | 94,37 | 6,6 | 49,06 | 91,80 | 1,9 | 132,46 | 2,7 |
| **160M-4** | 11 | 15 | 1468 | 20,76 | 121,31 | 5,8 | 71,56 | 121,50 | 1,7 | 193,21 | 2,7 |
| **160L-4** | 15 | 20 | 1460 | 28,19 | 140,97 | 5,0 | 98,12 | 166,60 | 1,7 | 255,10 | 2,6 |
| **180M-4** | 18,5 | 25 | 1477 | 33,53 | 206,45 | 6,2 | 120,94 | 202,50 | 1,7 | 384,23 | 3,2 |
| **180L-4** | 22 | 30 | 1470 | 39,62 | 261,96 | 6,6 | 142,93 | 235,19 | 1,6 | 401,22 | 2,8 |
| **200L-4** | 30 | 40 | 1480 | 53,48 | 385,07 | 7,2 | 193,58 | 425,88 | 2,2 | 445,24 | 2,3 |
| **225S-4** | 37 | 50 | 1480 | 65,37 | 490,30 | 7,5 | 238,75 | 525,25 | 2,2 | 549,13 | 2,3 |
| **225M-4** | 45 | 60 | 1480 | 77,39 | 588,17 | 7,6 | 290,37 | 638,82 | 2,2 | 667,85 | 2,3 |
| **250M-4** | 55 | 75 | 1480 | 93,89 | 713,58 | 7,6 | 354,90 | 780,78 | 2,2 | 816,27 | 2,3 |
| **280S-4** | 75 | 100 | 1480 | 126,70 | 874,24 | 6,9 | 483,95 | 1064,70 | 2,2 | 1113,09 | 2,3 |
| **280M-4** | 90 | 120 | 1485 | 153,61 | 1075,26 | 7,0 | 578,79 | 1273,33 | 2,2 | 1331,21 | 2,3 |
| **315S-4** | 110 | 150 | 1480 | 187,35 | 1292,74 | 6,9 | 709,80 | 1561,55 | 2,2 | 1632,53 | 2,3 |
| **315M-4** | 132 | 180 | 1480 | 224,59 | 1549,68 | 6,9 | 851,76 | 1873,86 | 2,2 | 1959,04 | 2,3 |
| **315LA-4** | 160 | 220 | 1480 | 271,67 | 1874,51 | 6,9 | 1032,43 | 2271,35 | 2,2 | 2374,59 | 2,3 |
| **315LB-4** | 200 | 270 | 1480 | 339,23 | 2340,72 | 6,9 | 1290,54 | 2839,19 | 2,2 | 2968,24 | 2,3 |
| **355M-4** | 250 | 335 | 1490 | 414,62 | 2860,88 | 6,9 | 1602,35 | 3525,17 | 2,2 | 3685,40 | 2,3 |
| **355L-4** | 315 | 423 | 1490 | 522,42 | 3604,71 | 6,9 | 2018,96 | 4441,71 | 2,2 | 4643,61 | 2,3 |

| TYPE | η % | | | | Fatt. pot. cos φ | | | ΔT (°C) | LwA (dB) | J Kgm2 | Kg |
|---|---|---|---|---|---|---|---|---|---|---|---|
| | 100% | IE | 75% | 50% | 100% | 75% | 50% | | | | |
| **80B-4** | 83,1 | IE3 | 82,6 | 81,6 | 0,690 | 0,619 | 0,531 | 46 | 56 | 0,00277 | 12 |
| **90S-4** | 84,8 | IE3 | 84,9 | 79,3 | 0,723 | 0,609 | 0,510 | 36 | 61 | 0,00304 | 25 |
| **90L-4** | 85,3 | IE3 | 85,1 | 83,0 | 0,708 | 0,592 | 0,483 | 41 | 61 | 0,00356 | 30 |
| **100LA-4** | 86,7 | IE3 | 87,8 | 85,8 | 0,771 | 0,663 | 0,543 | 41 | 64 | 0,00713 | 36 |
| **100LB-4** | 89,0 | IE3 | 89,4 | 86,8 | 0,745 | 0,648 | 0,519 | 46 | 64 | 0,00893 | 40 |
| **112M-4** | 89,1 | IE3 | 89,2 | 87,2 | 0,736 | 0,674 | 0,505 | 46 | 77 | 0,01663 | 43 |
| **132S-4** | 89,9 | IE3 | 92,1 | 92,4 | 0,830 | 0,770 | 0,675 | 61 | 71 | 0,02853 | 47,5 |
| **132M-4** | 90,5 | IE3 | 90,8 | 89,9 | 0,831 | 0,790 | 0,699 | 46 | 71 | 0,03946 | 81 |
| **160M-4** | 91,8 | IE3 | 91,7 | 90,4 | 0,833 | 0,790 | 0,675 | 52 | 73 | 0,08133 | 125 |
| **160L-4** | 92,3 | IE3 | 93,1 | 92,3 | 0,832 | 0,780 | 0,680 | 61 | 75 | 0,12239 | 150 |
| **180M-4** | 92,6 | IE3 | 92,1 | 90,2 | 0,870 | 0,817 | 0,724 | 40 | 76 | 0,18531 | 170,6 |
| **180L-4** | 93,2 | IE3 | 91,7 | 91,0 | 0,860 | 0,832 | 0,761 | 59 | 76 | 0,21065 | 189,3 |
| **200L-4** | 93,6 | IE3 | 93,8 | 92,8 | 0,865 | 0,818 | 0,767 | 80 | 79 | 0,34930 | 254,8 |
| **225S-4** | 93,9 | IE3 | 92,7 | 92,0 | 0,870 | 0,839 | 0,776 | 75 | 81 | 0,54128 | 268,3 |
| **225M-4** | 94,3 | IE3 | 93,3 | 92,8 | 0,890 | 0,872 | 0,807 | 80 | 81 | 0,62527 | 353 |
| **250M-4** | 95,0 | IE3 | 94,2 | 93,5 | 0,890 | 0,862 | 0,800 | 75 | 83 | 0,87991 | 450 |
| **280S-4** | 96,0 | IE4 | 94,5 | 92,0 | 0,890 | 0,863 | 0,843 | 70 | 86 | 1,71600 | 605 |
| **280M-4** | 96,1 | IE4 | 94,4 | 92,9 | 0,880 | 0,872 | 0,838 | 65 | 86 | 1,96680 | 700 |
| **315S-4** | 96,3 | IE4 | 94,7 | 93,2 | 0,880 | 0,872 | 0,838 | 65 | 87 | 4,13160 | 925 |
| **315M-4** | 96,4 | IE4 | 94,8 | 93,3 | 0,880 | 0,872 | 0,838 | 55 | 87 | 4,81800 | 1180 |
| **315LA-4** | 96,6 | IE4 | 95,0 | 93,5 | 0,880 | 0,872 | 0,838 | 75 | 87 | 5,42784 | 1160,5 |
| **315LB-4** | 96,7 | IE4 | 95,0 | 93,4 | 0,880 | 0,872 | 0,838 | 70 | 87 | 6,34920 | 1240,8 |
| **355M-4** | 96,7 | IE4 | 95,1 | 93,5 | 0,900 | 0,892 | 0,857 | 75 | 94 | 8,61960 | 1870 |
| **355L-4** | 96,7 | IE4 | 95,0 | 93,4 | 0,900 | 0,892 | 0,857 | 70 | 94 | 10,87680 | 2090 |

# B3

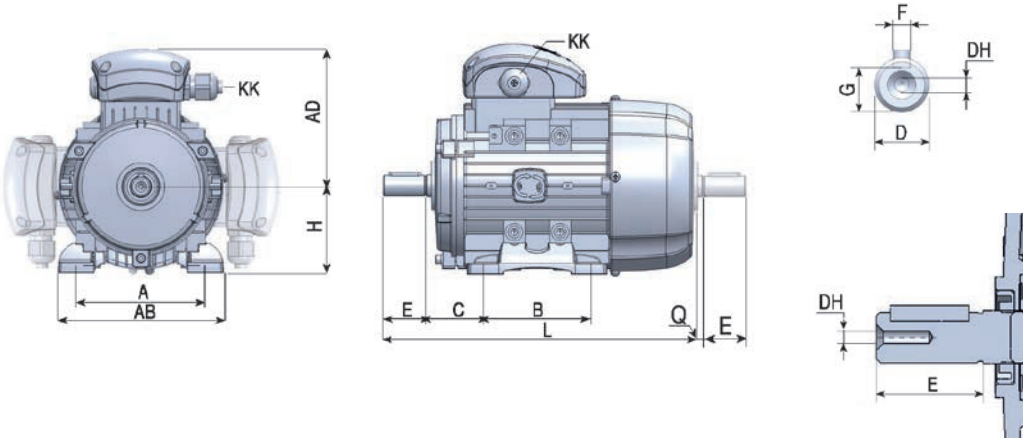


| DIMENSIONS (mm) | | | | | | | | | | | | | | | | |
|---|---|---|---|---|---|---|---|---|---|---|---|---|---|---|---|---|
| TYPE | POLES | AD | H | KK | L | D | DH | E | Q | F | G | B3 | | | | |
| | | | | | | | | | | | | A | AB | B | C | K |
| **80** | 2-8 | 130 | 80 | M20 | 283 | 19 | M6×16 | 40 | 3 | 6 | 15,5 | 125 | 157 | 100 | 50 | 10 |
| **90S** | 2-8 | 145 | 90 | M20 | 330 | 24 | M8×19 | 50 | 5 | 8 | 20 | 140 | 173 | 100 | 56 | 10 |
| **90L** | 2-8 | 145 | 90 | M20 | 358 | 24 | M8×19 | 50 | 5 | 8 | 20 | 140 | 173 | 125 | 56 | 10 |
| **100** | 2-8 | 157 | 100 | M20 | 393 | 28 | M10×22 | 60 | 5 | 8 | 24 | 160 | 196 | 140 | 63 | 12 |
| **112M** | 2-8 | 177 | 112 | M25 | 410 | 28 | M10×22 | 60 | 5 | 8 | 24 | 190 | 227 | 140 | 70 | 12 |
| **132S** | 2-8 | 197 | 132 | M32 | 480 | 38 | M12×28 | 80 | 5 | 10 | 33 | 216 | 262 | 140 | 89 | 12 |
| **132M** | 2-8 | 197 | 132 | M32 | 516 | 38 | M12×28 | 80 | 5 | 10 | 33 | 216 | 262 | 178 | 89 | 12 |
| **160M** | 2-8 | 255 | 160 | 2×M40 | 613 | 42 | M16×36 | 110 | 5 | 12 | 37 | 254 | 320 | 210 | 108 | 15 |
| **160L** | 2-8 | 252 | 160 | 2×M40 | 708 | 42 | M16×36 | 110 | 5 | 12 | 37 | 254 | 320 | 254 | 108 | 15 |
| **180M** | 2-8 | 270 | 180 | 2×M40 | 730 | 48 | M16×36 | 110 | 8 | 14 | 42,5 | 279 | 355 | 241 | 121 | 15 |
| **180L** | 2-8 | 270 | 180 | 2×M40 | 780 | 48 | M16×36 | 110 | 8 | 14 | 42,5 | 279 | 355 | 279 | 121 | 15 |
| **200L** | 2-8 | 303 | 200 | 2×M50 | 771 | 55 | M20×42 | 110 | 12 | 16 | 49 | 318 | 395 | 305 | 133 | 19 |
| **225S** | 2-8 | 312 | 225 | 2×M50 | 815 | 60 | M20×42 | 140 | 12 | 18 | 53 | 356 | 435 | 286 | 149 | 19 |
| **225M** | 2 | 312 | 225 | 2×M50 | 820 | 55 | M20×42 | 110 | 12 | 16 | 49 | 356 | 435 | 286/311 | 149 | 19 |
| **225M** | 4-8 | 312 | 225 | 2×M50 | 850 | 60 | M20×42 | 140 | 12 | 18 | 53 | 356 | 435 | 286/311 | 149 | 19 |
| **250M** | 2 | 355 | 250 | 2×M63 | 910 | 60 | M20×42 | 140 | 12 | 18 | 53 | 406 | 490 | 349 | 168 | 24 |
| **250M** | 4-8 | 355 | 250 | 2×M63 | 910 | 65 | M20×42 | 140 | 12 | 18 | 58 | 406 | 490 | 349 | 168 | 24 |
| **280S** | 2 | 398 | 280 | 2×M63 | 985 | 65 | M20×42 | 140 | 12 | 18 | 58 | 457 | 550 | 368 | 190 | 24 |
| **280S** | 4-8 | 398 | 280 | 2×M63 | 985 | 75 | M20×42 | 140 | 12 | 20 | 67,5 | 457 | 550 | 368 | 190 | 24 |
| **280M** | 2 | 398 | 280 | 2×M63 | 1035 | 65 | M20×42 | 140 | 12 | 18 | 58 | 457 | 550 | 368/419 | 190 | 24 |
| **280M** | 4-8 | 398 | 280 | 2×M63 | 1035 | 75 | M20×42 | 140 | 12 | 20 | 67,5 | 457 | 550 | 368/419 | 190 | 24 |
| **315S** | 2 | 540 | 315 | 2×M63 | 1160 | 65 | M20×42 | 140 | 15 | 18 | 58 | 508 | 630 | 406 | 216 | 28 |
| **315S** | 4-8 | 540 | 315 | 2×M63 | 1270 | 80 | M20×42 | 170 | 15 | 22 | 71 | 508 | 630 | 406 | 216 | 28 |
| **315M** | 2 | 540 | 315 | 2×M63 | 1290 | 65 | M20×42 | 140 | 15 | 18 | 58 | 508 | 630 | 457 | 216 | 28 |
| **315M** | 4-8 | 540 | 315 | 2×M63 | 1325 | 80 | M20×42 | 170 | 15 | 22 | 71 | 508 | 630 | 457 | 216 | 28 |
| **315L** | 2 | 540 | 315 | 2×M63 | 1320 | 65 | M20×42 | 140 | 15 | 18 | 58 | 508 | 630 | 508 | 216 | 28 |
| **315L** | 4-8 | 540 | 315 | 2×M63 | 1350 | 80 | M20×42 | 170 | 15 | 22 | 71 | 508 | 630 | 508 | 216 | 28 |
| **355M** | 2 | 655 | 355 | 2×M63 | 1500 | 75 | M20×42 | 140 | 15 | 20 | 67,5 | 610 | 730 | 560/630 | 254 | 28 |
| **355M** | 4-8 | 655 | 355 | 2×M63 | 1530 | 95 | M20×42 | 170 | 15 | 25 | 86 | 610 | 730 | 560/630 | 254 | 28 |
| **355L** | 2 | 655 | 355 | 2×M63 | 1500 | 75 | M20×42 | 140 | 15 | 20 | 67,5 | 610 | 730 | 560/630 | 254 | 28 |
| **355L** | 4-8 | 655 | 355 | 2×M63 | 1530 | 95 | M20×42 | 170 | 15 | 25 | 86 | 610 | 730 | 560/630 | 254 | 28 |

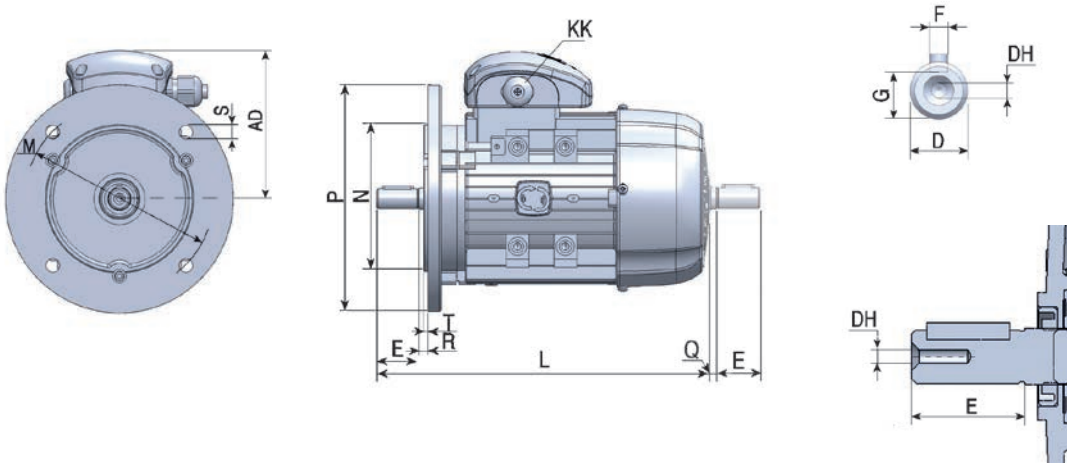


| DIMENSIONS (mm) | | | | | | | | | | | | | | | | |
|---|---|---|---|---|---|---|---|---|---|---|---|---|---|---|---|---|
| TYPE | POLES | AD | H | KK | L | D | DH | E | Q | F | G | B5 | | | | |
| | | | | | | | | | | | | M | N | P | S | T |
| **80** | 2-8 | 130 | 80 | M20 | 283 | 19 | M6×16 | 40 | 3 | 6 | 15,5 | 165 | 130 | 200 | 12×4 | 3,5 |
| **90S** | 2-8 | 145 | 90 | M20 | 330 | 24 | M8×19 | 50 | 5 | 8 | 20 | 165 | 130 | 200 | 12×4 | 3,5 |
| **90L** | 2-8 | 145 | 90 | M20 | 358 | 24 | M8×19 | 50 | 5 | 8 | 20 | 165 | 130 | 200 | 12×4 | 3,5 |
| **100** | 2-8 | 157 | 100 | M20 | 393 | 28 | M10×22 | 60 | 5 | 8 | 24 | 215 | 180 | 250 | 15×4 | 4 |
| **112M** | 2-8 | 177 | 112 | M25 | 410 | 28 | M10×22 | 60 | 5 | 8 | 24 | 215 | 180 | 250 | 15×4 | 4 |
| **132S** | 2-8 | 197 | 132 | M32 | 480 | 38 | M12×28 | 80 | 5 | 10 | 33 | 265 | 230 | 300 | 15×4 | 4 |
| **132M** | 2-8 | 197 | 132 | M32 | 516 | 38 | M12×28 | 80 | 5 | 10 | 33 | 265 | 230 | 300 | 15×4 | 4 |
| **160M** | 2-8 | 255 | 160 | 2×M40 | 613 | 42 | M16×36 | 110 | 5 | 12 | 37 | 300 | 250 | 350 | 19×4 | 5 |
| **160L** | 2-8 | 252 | 160 | 2×M40 | 708 | 42 | M16×36 | 110 | 5 | 12 | 37 | 300 | 250 | 350 | 19×4 | 5 |
| **180M** | 2-8 | 270 | 180 | 2×M40 | 730 | 48 | M16×36 | 110 | 8 | 14 | 42,5 | 300 | 250 | 350 | 19×4 | 5 |
| **180L** | 2-8 | 270 | 180 | 2×M40 | 780 | 48 | M16×36 | 110 | 8 | 14 | 42,5 | 300 | 250 | 350 | 19×4 | 5 |
| **200L** | 2-8 | 303 | 200 | 2×M50 | 771 | 55 | M20×42 | 110 | 12 | 16 | 49 | 350 | 300 | 400 | 19×4 | 5 |
| **225S** | 2-8 | 312 | 225 | 2×M50 | 815 | 60 | M20×42 | 140 | 12 | 18 | 53 | 400 | 350 | 450 | 19×8 | 5 |
| **225M** | 2 | 312 | 225 | 2×M50 | 820 | 55 | M20×42 | 110 | 12 | 16 | 49 | 400 | 350 | 450 | 19×8 | 5 |
| **225M** | 4-8 | 312 | 225 | 2×M50 | 850 | 60 | M20×42 | 140 | 12 | 18 | 53 | 400 | 350 | 450 | 19×8 | 5 |
| **250M** | 2 | 355 | 250 | 2×M63 | 910 | 60 | M20×42 | 140 | 12 | 18 | 53 | 500 | 450 | 550 | 19×8 | 5 |
| **250M** | 4-8 | 355 | 250 | 2×M63 | 910 | 65 | M20×42 | 140 | 12 | 18 | 58 | 500 | 450 | 550 | 19×8 | 5 |
| **280S** | 2 | 398 | 280 | 2×M63 | 985 | 65 | M20×42 | 140 | 12 | 18 | 58 | 500 | 450 | 550 | 19×8 | 5 |
| **280S** | 4-8 | 398 | 280 | 2×M63 | 985 | 75 | M20×42 | 140 | 12 | 20 | 67,5 | 500 | 450 | 550 | 19×8 | 5 |
| **280M** | 2 | 398 | 280 | 2×M63 | 1035 | 65 | M20×42 | 140 | 12 | 18 | 58 | 500 | 450 | 550 | 19×8 | 5 |
| **280M** | 4-8 | 398 | 280 | 2×M63 | 1035 | 75 | M20×42 | 140 | 12 | 20 | 67,5 | 500 | 450 | 550 | 19×8 | 5 |
| **315S** | 2 | 540 | 315 | 2×M63 | 1160 | 65 | M20×42 | 140 | 15 | 18 | 58 | 600 | 550 | 660 | 24×8 | 6 |
| **315S** | 4-8 | 540 | 315 | 2×M63 | 1270 | 80 | M20×42 | 170 | 15 | 22 | 71 | 600 | 550 | 660 | 24×8 | 6 |
| **315M** | 2 | 540 | 315 | 2×M63 | 1290 | 65 | M20×42 | 140 | 15 | 18 | 58 | 600 | 550 | 660 | 24×8 | 6 |
| **315M** | 4-8 | 540 | 315 | 2×M63 | 1325 | 80 | M20×42 | 170 | 15 | 22 | 71 | 600 | 550 | 660 | 24×8 | 6 |
| **315L** | 2 | 540 | 315 | 2×M63 | 1320 | 65 | M20×42 | 140 | 15 | 18 | 58 | 600 | 550 | 660 | 24×8 | 6 |
| **315L** | 4-8 | 540 | 315 | 2×M63 | 1350 | 80 | M20×42 | 170 | 15 | 22 | 71 | 600 | 550 | 660 | 24×8 | 6 |
| **355M** | 2 | 655 | 355 | 2×M63 | 1500 | 75 | M20×42 | 140 | 15 | 20 | 67,5 | 740 | 680 | 800 | 24×8 | 6 |
| **355M** | 4-8 | 655 | 355 | 2×M63 | 1530 | 95 | M20×42 | 170 | 15 | 25 | 86 | 740 | 680 | 800 | 24×8 | 6 |
| **355L** | 2 | 655 | 355 | 2×M63 | 1500 | 75 | M20×42 | 140 | 15 | 20 | 67,5 | 740 | 680 | 800 | 24×8 | 6 |
| **355L** | 4-8 | 655 | 355 | 2×M63 | 1530 | 95 | M20×42 | 170 | 15 | 25 | 86 | 740 | 680 | 800 | 24×8 | 6 |

# B5R/B14

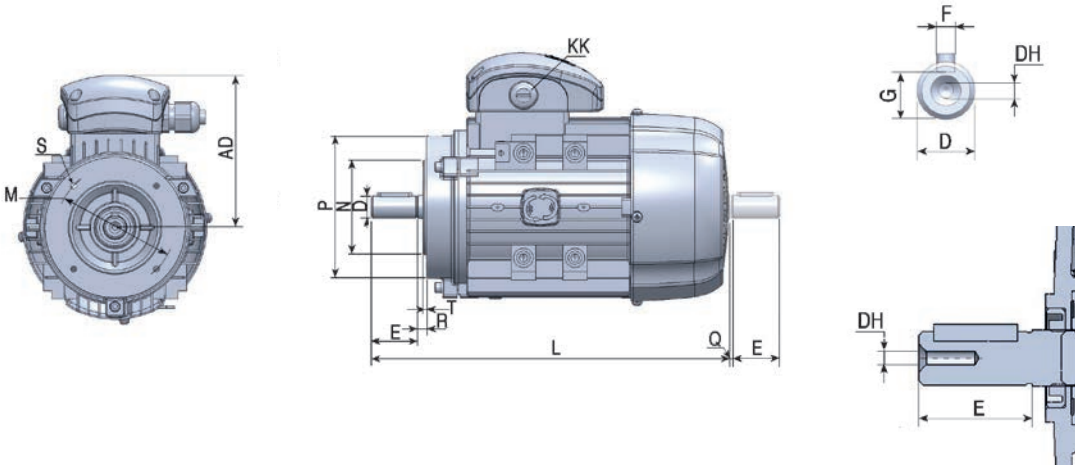


## B14

| DIMENSIONS (mm) | | | | | | | | | | | | | | | | |
|---|---|---|---|---|---|---|---|---|---|---|---|---|---|---|---|---|
| TYPE | POLES | AD | H | KK | L | D | DH | E | Q | F | G | B14 | | | | |
| | | | | | | | | | | | | M | N | P | S | T |
| **80** | 2-8 | 130 | 80 | M20 | 283 | 19 | M6×16 | 40 | 3 | 6 | 15,5 | 100 | 80 | 120 | M6 | 3 |
| **90S** | 2-8 | 145 | 90 | M20 | 330 | 24 | M8×19 | 50 | 5 | 8 | 20 | 115 | 95 | 140 | M8 | 3 |
| **90L** | 2-8 | 145 | 90 | M20 | 358 | 24 | M8×19 | 50 | 5 | 8 | 20 | 115 | 95 | 140 | M8 | 3 |
| **100** | 2-8 | 157 | 100 | M20 | 393 | 28 | M10×22 | 60 | 5 | 8 | 24 | 130 | 110 | 160 | M8 | 3,5 |
| **112M** | 2-8 | 177 | 112 | M25 | 410 | 28 | M10×22 | 60 | 5 | 8 | 24 | 130 | 110 | 160 | M8 | 3,5 |
| **132S** | 2-8 | 197 | 132 | M32 | 480 | 38 | M12×28 | 80 | 5 | 10 | 33 | 165 | 130 | 200 | M10 | 3,5 |
| **132M** | 2-8 | 197 | 132 | M32 | 516 | 38 | M12×28 | 80 | 5 | 10 | 33 | 165 | 130 | 200 | M10 | 3,5 |
| **160M** | 2-8 | 255 | 160 | 2×M40 | 613 | 42 | M16×36 | 110 | 5 | 12 | 37 | 215 | 180 | 250 | M12 | 4 |
| **160L** | 2-8 | 252 | 160 | 2×M40 | 708 | 42 | M16×36 | 110 | 5 | 12 | 37 | 215 | 180 | 250 | M12 | 4 |

## B5R/B14

| DIMENSIONS (mm) | | | | | | | | | | | | | | | | |
|---|---|---|---|---|---|---|---|---|---|---|---|---|---|---|---|---|
| TYPE | POLES | AD | H | KK | L | D | DH | E | Q | F | G | B5R / B14B | | | | |
| | | | | | | | | | | | | M | N | P | S | T |
| **80** | 2-8 | 130 | 80 | M20 | 283 | 19 | M6×16 | 40 | 3 | 6 | 15,5 | 130 | 110 | 160 | M8 | 3,5 |
| **90S** | 2-8 | 145 | 90 | M20 | 330 | 24 | M8×19 | 50 | 5 | 8 | 20 | 130 | 110 | 160 | M8 | 3,5 |
| **90L** | 2-8 | 145 | 90 | M20 | 358 | 24 | M8×19 | 50 | 5 | 8 | 20 | 130 | 110 | 160 | M8 | 3,5 |
| **100** | 2-8 | 157 | 100 | M20 | 393 | 28 | M10×22 | 60 | 5 | 8 | 24 | 165 | 130 | 200 | M10 | 3,5 |
| **112M** | 2-8 | 177 | 112 | M25 | 410 | 28 | M10×22 | 60 | 5 | 8 | 24 | 165 | 130 | 200 | M10 | 3,5 |
| **132S** | 2-8 | 197 | 132 | M32 | 480 | 38 | M12×28 | 80 | 5 | 10 | 33 | 215 | 180 | 250 | M10 | 4 |
| **132M** | 2-8 | 197 | 132 | M32 | 516 | 38 | M12×28 | 80 | 5 | 10 | 33 | 215 | 180 | 250 | M10 | 4 |
| **160M** | 2-8 | 255 | 160 | 2×M40 | 613 | 42 | M16×36 | 110 | 5 | 12 | 37 | 265 | 230 | 300 | 14×4 | 5 |
| **160L** | 2-8 | 252 | 160 | 2×M40 | 708 | 42 | M16×36 | 110 | 5 | 12 | 37 | 265 | 230 | 300 | 14×4 | 5 |

# BOOSTER SETS

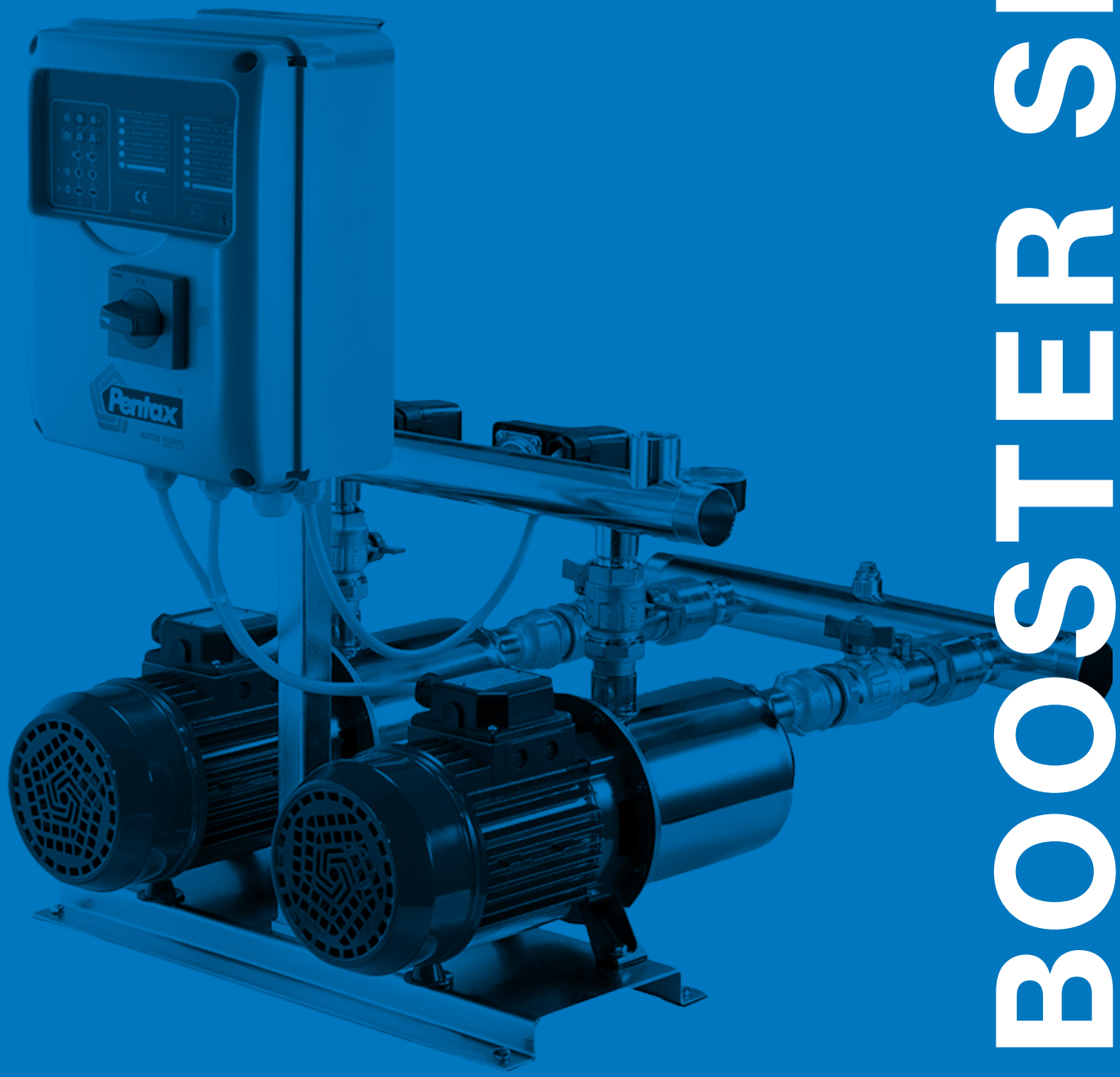

# AQUADOMUS

## Booster set

Aquadomus is an integrated 'Plug&Play' system to manage water pressurization for domestic and residential applications. The electronic control (E-IPFC) manages the operation of the system in order to maintain the pressure constant even if the conditions of use change. It can be driven and monitored by a dedicated app "UnyConnect".
It consists of a multistage pump, a permanent magnet synchronous motor, an electronic inverter control, an expansion tank, a no return valve, a pressure sensor, a cable with plug.

| Construction features | |
|---|---|
| **Pump body** | stainless steel AISI 304 |
| **Motor bracket** | aluminum |
| **Impellers, diffusers** | Noryl® |
| **Mechanical seal** | ceramic-graphite-EPDM |
| **Motor shaft** | stainless steel AISI 303 |
| **Liquid temperature** | -5 ÷ +35 °C |
| **Rated pressure** | max 7 bar |
| **4 poles synchronus motor with permanent magnet** | 4200 rpm |
| **Input voltage** | 1~ 230V - 50Hz<br>1~ 220V - 60Hz<br>1~ 115V - 50/60Hz |
| **Insulation class** | F |
| **Protection degree** | IPX4 |
| **Max rated current** | 3,7 A |
| **Max absorbed power P1** | 820W |
| **Cable** | H07 RNF 1,5 m |

Constant pressure even if the conditions of use change

Dedicated UnyConnect App for programming and monitoring (compatible with Ios and Android)

Bluetooth smart pump

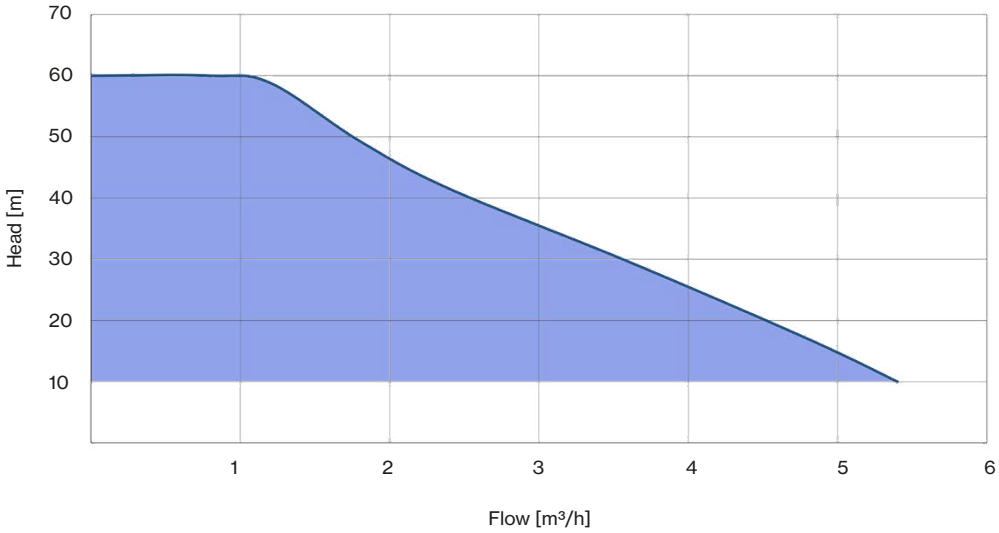


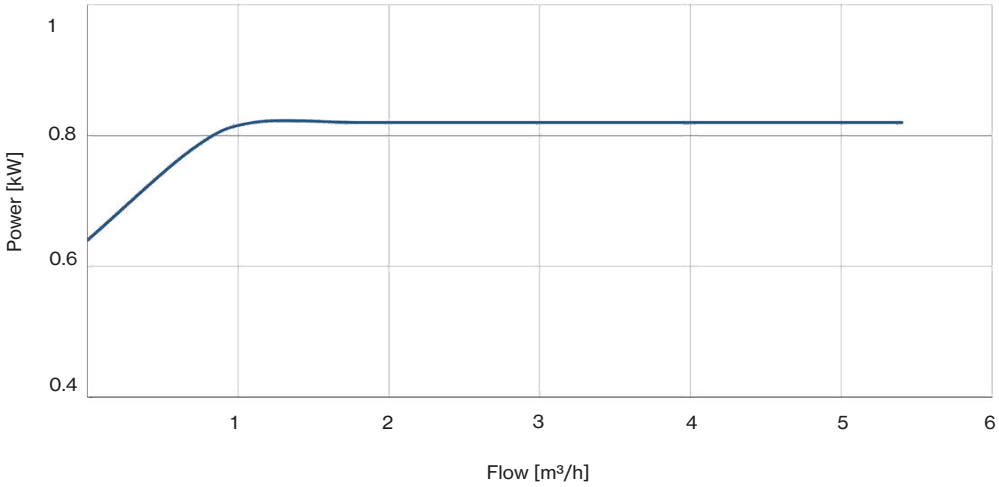


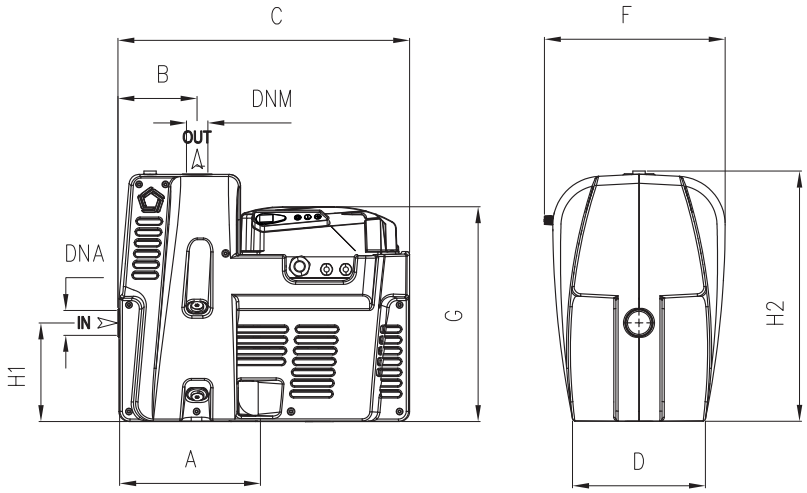


| TYPE - 50 Hz | DIMENSIONS (mm) | | | | | | | | | | Kg |
|---|---|---|---|---|---|---|---|---|---|---|---|
| | A | B | C | D | F | G | H1 | H2 | DNA | DNM | |
| **Aquadomus** | 166,8 | 103 | 377 | 173 | 235 | 280 | 128 | 325 | 1" G | 1" G | 11 |

| LOTS | | | | |
|---|---|---|---|---|
| TYPE | TRUCK | | CONTAINER | |
| | PALLET (cm) | N° pumps | PALLET (cm) | N° pumps |
| **Aquadomus** | 80×120×150 | 36 | 80×120×185 | 45 |

# SUPERDOMUS

## Booster set

INOX 100N-24 L

INOX BOX 100N-24 L

PM 45-24 L

**Fixed speed booster sets with one pump and membrane tank**

### DESCRIPTION

Compact, built-in, fully automatic pressurization units consisting of a single pump, membrane tank, pressure switch, pressure gauge, connectors and cable with plug. They are ready for installation and suitable for pressure boosting in water systems for domestic use and industrial applications.

### FUNCTIONING

The pump switches on automatically when the pressure drops below the minimum set value. When water demand ends, the pump will fill up the tank and then it turns off when the pressure reaches the maximum set value.

| TYPE - 50 Hz | | P2 | | P1 | | Pipe | | Tank capacity | | | | | |
|---|---|---|---|---|---|---|---|---|---|---|---|---|---|
| 1~ | 3~ | | | 1~ | 3~ | Suction | Delivery | 8 L | 20-24 L | | | 50 L | 100 L |
| | | HP | kW | kW | | | | cylindrical | spherical | cylindrical | inox | cylindrical | cylindrical |
| **CP 45** | - | 0,5 | 0,37 | 0,5 | - | 1" G | 1" G | ■ | ■ | - | - | - | - |
| **CP 75** | - | 1 | 0,74 | 1,11 | - | 1" G | 1" G | ■ | ■ | - | - | - | - |
| **PM 45** | - | 0,5 | 0,37 | 0,5 | - | 1" G | 1" G | ■ | ■ | - | - | - | - |
| **PM 80** | - | 1 | 0,74 | 1,1 | - | 1" G | 1" G | ■ | ■ | ■ | - | - | - |
| **CAM 50N** | - | 0,6 | 0,44 | 0,7 | - | 1" G | 1" G | ■ | - | ■ | - | - | - |
| **CAM 75N** | - | 0,8 | 0,59 | 0,82 | - | 1" G | 1" G | ■ | - | ■ | - | ■ | - |
| **CAM 100N** | - | 1 | 0,74 | 1,04 | - | 1" G | 1" G | - | ■ | ■ | - | ■ | - |
| **CAM 120** | - | 1,2 | 0,88 | 1,14 | - | 1" G | 1" G | - | ■ | ■ | - | ■ | - |
| **CAM 140** | - | 1,5 | 1,1 | 1,3 | - | 1" G | 1" G | - | ■ | ■ | - | ■ | - |
| **CAM 150** | **CAMT 150** | 2 | 1,5 | 1,9 | 1,8 | 1 ½" G | 1 ¼" G | - | - | - | - | - | ■ |
| **CAM 200** | **CAMT 200** | 2,5 | 1,85 | 2,3 | 2,2 | 1 ½" G | 1 ¼" G | - | - | - | - | - | ■ |
| **CAM 300** | **CAMT 300** | 3 | 2,2 | 2,7 | 2,6 | 1 ½" G | 1 ¼" G | - | - | - | - | - | ■ |
| **INOX 100N** | - | 1 | 0,74 | 1,04 | - | 1" G | 1" G | - | - | ■ | ■ | ■ | - |
| **INOX 120** | - | 1,2 | 0,88 | 1,14 | - | 1" G | 1" G | - | - | ■ | ■ | ■ | - |
| **INOX 140** | - | 1,5 | 1,1 | 1,3 | - | 1" G | 1" G | - | - | ■ | ■ | ■ | - |
| **CAB 150** | **CABT 150** | 2 | 1,5 | 1,8 | 1,7 | 1½" G | 1" G | - | - | ■ | - | ■ | - |
| **CAB 200** | **CABT 200** | 2,5 | 1,85 | 2,2 | 2,1 | 1½" G | 1" G | - | - | - | - | ■ | ■ |
| **CAB 300** | **CABT 300** | 3 | 2,2 | 2,8 | 2,6 | 1½" G | 1" G | - | - | - | - | - | ■ |
| **AP 75** | - | 0,8 | 0,59 | 0,8 | - | 1 ¼" G | 1" G | - | - | ■ | - | - | - |
| **AP 100** | - | 1 | 0,74 | 1,02 | - | 1 ¼" G | 1" G | - | - | ■ | - | - | - |
| **AP 150** | **APT 150** | 2 | 1,5 | 1,8 | 1,7 | 1 ¼" G | 1" G | - | - | ■ | - | ■ | - |
| **AP 200** | **APT 200** | 2,5 | 1,85 | 2,2 | 2,1 | 1 ¼" G | 1" G | - | - | - | - | ■ | - |
| **MPX 100** | - | 1 | 0,74 | 1,07 | - | 1" G | 1" G | - | - | ■ | ■ | - | - |
| **MPX 120** | - | 1,2 | 0,88 | 1,27 | - | 1" G | 1" G | - | - | ■ | ■ | - | - |
| **U 3A-90/4** | **U 3A-90/4T** | 0,9 | 0,66 | 0,9 | 0,88 | 1" G | 1" G | - | - | ■ | ■ | ■ | ■ |
| **U 3A-100/5** | **U 3A-100/5T** | 1 | 0,75 | 1,06 | 1,01 | 1" G | 1" G | - | - | ■ | ■ | ■ | ■ |
| **U 5A-120/4** | **U 5A-120/4T** | 1,2 | 0,9 | 1,13 | 1,13 | 1" G | 1" G | - | - | ■ | ■ | ■ | ■ |
| **U 5A-150/5** | **U 5A-150/5T** | 1,5 | 1,1 | 1,47 | 1,39 | 1" G | 1" G | - | - | ■ | ■ | ■ | ■ |
| **U 3SA-90/4** | **U 3SA-90/4T** | 0,9 | 0,66 | 0,83 | 0,8 | 1" G | 1" G | - | - | ■ | ■ | ■ | ■ |
| **U 3SA-100/5** | **U 3SA-100/5T** | 1 | 0,75 | 0,99 | 0,92 | 1" G | 1" G | - | - | ■ | ■ | ■ | ■ |
| **U 5SA-120/4** | **U 5SA-120/4T** | 1,2 | 0,9 | 1,09 | 1,08 | 1" G | 1" G | - | - | ■ | ■ | ■ | ■ |
| **U 5SA-150/5** | **U 5SA-150/5T** | 1,5 | 1,1 | 1,39 | 1,31 | 1" G | 1" G | - | - | ■ | ■ | ■ | ■ |

# SUPERDOMUS+VSD

## Booster set

**Variable speed booster sets with one pump and membrane tank**

**DESCRIPTION**
SUPERDOMUS+VSD are single-phase automatic booster sets consisting of a horizontal pump operated and controlled by EPIC variable speed drive. They provide constant pressure regardless of changes on flow demand, making them suitable for low or missing pressure in domestic systems and small industrial applications.

**FEATURES**
- Variable speed drive EPIC (1~ 230V-in, 3~ 230V-out)
- Three-phase horizontal pump
- Stainless steel 5-way connector with built-in non return valve
- Pressure sensor
- Pressure gauge
- 8 liters membrane tank
- Cable with plug

**FUNCTIONING**
If the pressure in the network drops the pump will starts and gradually speeds up to provide with the set pressure. When the water demand decreases, the pressure will rise causing the pump speed to slow down and eventually to stop the pump if demand ceases. The pump will remain on standby waiting to start at the next water demand.

**SELECTION**
The table below shows the pump series available as SUPERDOMUS+VSD. Consult the catalog at the relative pump series for specifics and characteristic curves.

| VSD | HORIZONTAL 3~ PUMP TYPE | max P2 | |
|---|---|---|---|
| | | HP | kW |
| EPIC | **CAM** | 2 | 1,5 |
| | **CAB** | 2 | 1,5 |
| | **INOX** | 1,5 | 1,1 |
| | **MPX** | 1,2 | 0,88 |
| | **CM** | 2 | 1,5 |
| | **CB** | 2 | 1,5 |
| | **MB** | 2 | 1,5 |
| | **U 3, U 3S** | 1,5 | 1,1 |
| | **U 5, U 5S** | 2 | 1,5 |
| | **U 7, U 7S** | 2,5 | 1,85 |
| | **U 9, U 9S** | 2 | 1,5 |
| | **U 18, U 18S** | 2 | 1,5 |

# SELF-PRIMING

**Fixed speed and variable speed booster sets with two self-priming pumps**

## DESCRIPTION

Pressurisation units with 2 self-priming horizontal axis pumps fitted on a single skid and connected in parallel by suction and delivery manifolds. These systems are specifically designed for domestic use as well as small civil or industrial applications. They can be equipped with EPIC inverters, which ensures that they can meet the constant pressure demands for modern systems. The key characteristics of these systems are their reliability, user-friendly operation, and low maintenance needs. To ensure proper operation of the booster set, pressure tanks of adequate capacity are required depending on constant or variable speed, pumps type, and applications.

## FEATURES

- Two self-priming horizontal axis pumps
- Cast iron pump body for CAM and CAB pumps series
- Stainless steel pump body for INOX, ULTRA A, ULTRA SA series
- Suction manifold in galvanized steel with non-return and isolation valves
- Delivery manifold in galvanized steel with pressure gauge and isolation valves
- Base frame in galvanized steel
- Electronic control panel EQ2SM(T) and two pressure switches for fixed speed version
- Inverter EPIC on each pump and two pressure sensors for the variable speed version
- Pressure tanks available on request, as accessory

## FUNCTIONING

In the fixed speed version as soon as pressure drops below the minimum set value on the pressure switch the first pump starts automatically. If water demand further increases, the second pump will run until the pressure rises above the maximum set value. When demand ends, the last pump turns off. All the pumps follow cycling changeover for equal work distribution. In case of one pump failure, the other pumps would continue to operate.

In the variable speed version when the system pressure drops below the desired level, the sensors detect it giving an input to the inverter to start the first pump at controlled speed. If the flow rate is not sufficient, the pressure continues to drop causing the second pump to start. As soon as the flow demand decreases, the pressure rises again and the second pump stop. The first pump continues to modulate its speed in order to regulate and maintain the set pressure until it turns off when the flow demand ends. Based on working hours, the inverters will alternate the starting order of pumps to ensure better wear distribution. Continuity of operation is ensured in the event of one pump or one inverter failure.

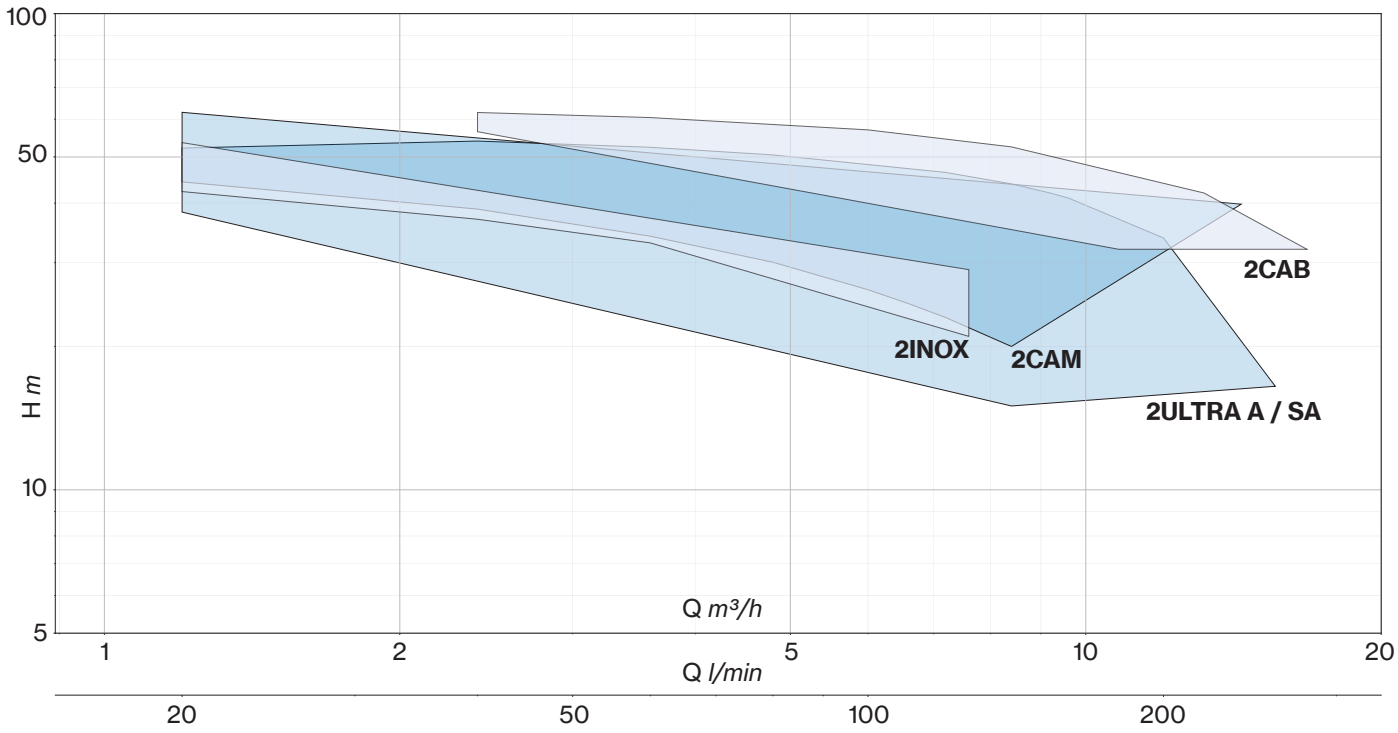


Number of pumps

Pump series

Motor
- 1~
- **T** 3~

Control type
- Fixed speed
- **/E** Variable speed EPIC

Pump model

Motor bracket
- **0** cast iron
- **6** aluminum

Impeller
- **0** Noryl
- **1** brass
- **2** AISI 304

Manifolds
- Galvanized steel
- **CS** AISI304

Power supply
(phase × voltage - frequency)

**2 CAM T /E 100N/60 1×230-50**

# SELF-PRIMING BOOSTER SETS

| TARGET 2U | | TYPE - 50 Hz | | | P2 (×2) | | Q (m³/h - l/min) | | | | | | | | | | | |
|---|---|---|---|---|---|---|---|---|---|---|---|---|---|---|---|---|---|---|
| | | FIXED SPEED | | VARIABLE SPEED | | | 0 | 1,2 | 2,4 | 3,6 | 4,8 | 7,2 | 8,4 | 9,2 | 9,6 | 12,0 | 14 | 15,6 |
| | | 1~ 230V | 3~ 400V | 1~ 230V-in 3~ 230V-out | | | 0 | 20 | 40 | 60 | 80 | 120 | 140 | 153,4 | 160 | 200 | 233 | 260 |
| l/min | bar | | | | HP | kW | H (m) | | | | | | | | | | | |
| 80 | 3 | **2U3A-90/4** | **2U3A-90/4T** | **2U3A/E-90/4T** | 0,9 | 0,66 | 40,8 | 38,3 | 35,1 | 31,8 | 29,9 | 19,8 | 15,0 | | | | | |
| | | **2U3SA-90/4** | **2U3SA-90/4T** | **2U3SA/E-90/4T** | | | 43,0 | 41,0 | 38,3 | 35,0 | 31,3 | 22,3 | 17,2 | 13,5 | | | | |
| 100 | | **2U3A-100/5** | **2U3A-100/5T** | **2U3A/E-100/5T** | 1 | 0,75 | 52,2 | 48,9 | 45,1 | 40,8 | 36,0 | 25,4 | 19,8 | 15,0 | | | | |
| | | **2U3SA-100/5** | **2U3SA-100/5T** | **2U3SA/E-100/5T** | | | 54,0 | 52,1 | 48,8 | 44,9 | 40,2 | 29,0 | 22,0 | 16,8 | | | | |
| 160 | | **2U5A-120/4** | **2U5A-120/4T** | **2U5A/E-120/4T** | 1,2 | 0,9 | 45,3 | 44,2 | 42,8 | 41,3 | 39,6 | 35,6 | 33,4 | 31,7 | 30,8 | 24,0 | 15,0 | |
| | | **2U5SA-120/4** | **2U5SA-120/4T** | **2U5SA/E-120/4T** | | | 44,5 | 43,3 | 42,1 | 41,0 | 40,0 | 36,4 | 34,3 | 32,8 | 32,0 | 26,2 | 18,5 | 13,5 |
| 200 | | **2U5A-150/5** | **2U5A-150/5T** | **2U5A/E-150/5T** | 1,5 | 1,1 | 56,8 | 55,9 | 54,6 | 53,0 | 51,0 | 46,1 | 43,2 | 41,2 | 40,1 | 33,0 | 24,0 | 15,0 |
| | | **2U5SA-150/5** | **2U5SA-150/5T** | **2U5SA/E-150/5T** | | | 56,0 | 52,2 | 54,0 | 52,4 | 50,5 | 46,4 | 43,9 | 42,0 | 41,0 | 33,8 | 23,8 | 16,5 |

| TARGET 2CAM | | TYPE - 50 Hz | | | P2 (×2) | | Q (m³/h - l/min) | | | | | | | | | | | |
|---|---|---|---|---|---|---|---|---|---|---|---|---|---|---|---|---|---|---|
| | | FIXED SPEED | | VARIABLE SPEED | | | 0 | 1,2 | 2,4 | 3,6 | 4,8 | 6 | 6,6 | 7,2 | 8,4 | 9,6 | 12 | 14,4 |
| | | 1~ 230V | 3~ 400V | 1~ 230V-in 3~ 230V-out | | | 0 | 20 | 40 | 60 | 80 | 100 | 110 | 120 | 140 | 160 | 200 | 240 |
| l/min | bar | | | | HP | kW | H (m) | | | | | | | | | | | |
| 80 | 3 | **2CAM100N** | **2CAMT100N** | **2CAMT/E100N** | 1 | 0,74 | 50,9 | 44,3 | 38,9 | 34,1 | 30,1 | 26,3 | 24,6 | 23,0 | 20,0 | | | |
| 100 | 3 | **2CAM120** | **2CAMT120** | **2CAMT/E120** | 1,2 | 0,88 | 55,1 | 48,5 | 42,6 | 37,8 | 33,5 | 29,7 | 27,9 | 26,2 | 23,0 | | | |
| 120 | 3 | **2CAM140** | **2CAMT140** | **2CAMT/E140** | 1,5 | 1,1 | 62,5 | 55,7 | 49,4 | 44,2 | 39,5 | 35,5 | 33,5 | 31,6 | 28,1 | | | |
| 140 | 3,5 | **2CAM150** | **2CAMT150** | **2CAMT/E150** | 2 | 1,5 | 54,8 | 51,8 | 48,9 | 46,2 | 43,6 | 41,1 | 40,0 | 38,8 | 36,6 | 34,5 | 30,6 | 26,8 |
| 160 | 4 | **2CAM200** | **2CAMT200** | **-** | 2,5 | 1,85 | 62,7 | 59,7 | 56,8 | 54,0 | 51,5 | 49,1 | 47,9 | 46,8 | 44,6 | 42,4 | 38,4 | 34,8 |
| 180 | 4,5 | **2CAM300** | **2CAMT300** | **-** | 3 | 2,2 | 70,0 | 66,9 | 63,9 | 61,0 | 58,3 | 55,8 | 54,6 | 53,5 | 51,3 | 49,2 | 45,1 | 41,6 |

| TARGET 2INOX | | TYPE - 50 Hz | | | P2 (×2) | | Q (m³/h - l/min) | | | | | | | |
|---|---|---|---|---|---|---|---|---|---|---|---|---|---|---|
| | | FIXED SPEED | | VARIABLE SPEED | | | 0 | 1,2 | 2,4 | 3,6 | 4,8 | 6 | 7,2 | 7,6 |
| | | 1~ 230V | 3~ 400V | 1~ 230V-in 3~ 230V-out | | | 0 | 20 | 40 | 60 | 80 | 100 | 120 | 126,6 |
| l/min | bar | | | | HP | kW | H (m) | | | | | | | |
| 80 | 3 | **2INOX100N** | **2INOXT100N** | **2INOXT/E100N** | 1 | 0,74 | 48,0 | 42,3 | 37,0 | 33,0 | 29,6 | 26,2 | 22,7 | 21,0 |
| 100 | | **2INOX120** | **2INOXT120** | **2INOXT/E120** | 1,2 | 0,88 | 53,4 | 47,4 | 41,9 | 37,5 | 33,7 | 29,9 | 26,0 | 24,3 |
| 120 | | **2INOX140** | **2INOXT140** | **2INOXT/E140** | 1,5 | 1,1 | 60,2 | 53,6 | 47,8 | 42,4 | 38,0 | 34,4 | 30,5 | 29,0 |

| TARGET 2CAB | | TYPE - 50 Hz | | | P2 (×2) | | Q (m³/h - l/min) | | | | | | | |
|---|---|---|---|---|---|---|---|---|---|---|---|---|---|---|
| | | FIXED SPEED | | VARIABLE SPEED | | | 0 | 2,4 | 3,6 | 6,0 | 8,4 | 10,8 | 13,2 | 15,6 |
| | | 1~ 230V | 3~ 400V | 1~ 230V-in 3~ 230V-out | | | 0 | 40 | 60 | 100 | 140 | 180 | 220 | 260,0 |
| l/min | bar | | | | HP | kW | H (m) | | | | | | | |
| 140 | 4 | **2CAB150** | **2CABT150** | **2CABT/E150** | 1,5 | 1,1 | 61,5 | 57,2 | 54,7 | 48,5 | 40,9 | 30,8 | | |
| 180 | | **2CAB200** | **2CABT200** | **2CABT/E200** | 2 | 1,5 | 62,8 | 60,0 | 58,5 | 54,7 | 50,1 | 44,5 | 38,7 | |
| 220 | | **2CAB300** | **2CABT300** | **-** | 3 | 2,2 | 68,4 | 65,6 | 64,0 | 60,7 | 56,5 | 51,7 | 46,4 | 40,2 |

# THREADED CENTRIFUGAL

**Fixed speed and variable speed booster sets with two threaded centrifugal pumps**

**DESCRIPTION**

Pressurisation units with 2 horizontal centrifugal pumps fitted on a single skid and connected in parallel by suction and delivery manifolds. These systems are extremely silent and designed for water supply, pressurization, heating and air conditioning and liquid transfer. They can be equipped with EPIC and EPIC-A inverters, which ensures that they can meet the constant pressure demands for modern systems. The key characteristics of these systems are their reliability, user-friendly operation, and low maintenance needs. To ensure proper operation of the booster set, pressure tanks of adequate capacity are required depending on constant or variable speed, pumps type, and applications.

**FEATURES**

- Two horizontal axis pumps with single or double impeller
- Cast iron pump body
- Suction manifold in galvanized steel with non-return and isolation valves
- Delivery manifold in galvanized steel with pressure gauge and isolation valves
- Base frame in galvanized steel
- Electronic control panel EQ2SM(T) and two pressure switches for fixed speed version
- Inverter EPIC or EPIC-A on each pump and two pressure sensors for the variable speed version
- Pressure tanks available on request, as accessory

**FUNCTIONING**

In the fixed speed version as soon as pressure drops below the minimum set value on the pressure switch the first pump starts automatically. If water demand further increases, the second pump will run until the pressure rises above the maximum set value. When demand ends, the last pump turns off. All the pumps follow cycling changeover for equal work distribution. In case of one pump failure, the other pumps would continue to operate.

In the variable speed version when the system pressure drops below the desired level, the sensors detect it giving an input to the inverter to start the first pump at controlled speed. If the flow rate is not sufficient, the pressure continues to drop causing the second pump to start. As soon as the flow demand decreases, the pressure rises again and the second pump stop. The first pump continues to modulate its speed in order to regulate and maintain the set pressure until it turns off when the flow demand ends. Based on working hours, the inverters will alternate the starting order of pumps to ensure better wear distribution. Continuity of operation is ensured in the event of one pump or one inverter failure.

# THREADED CENTRIFUGAL BOOSTER SETS

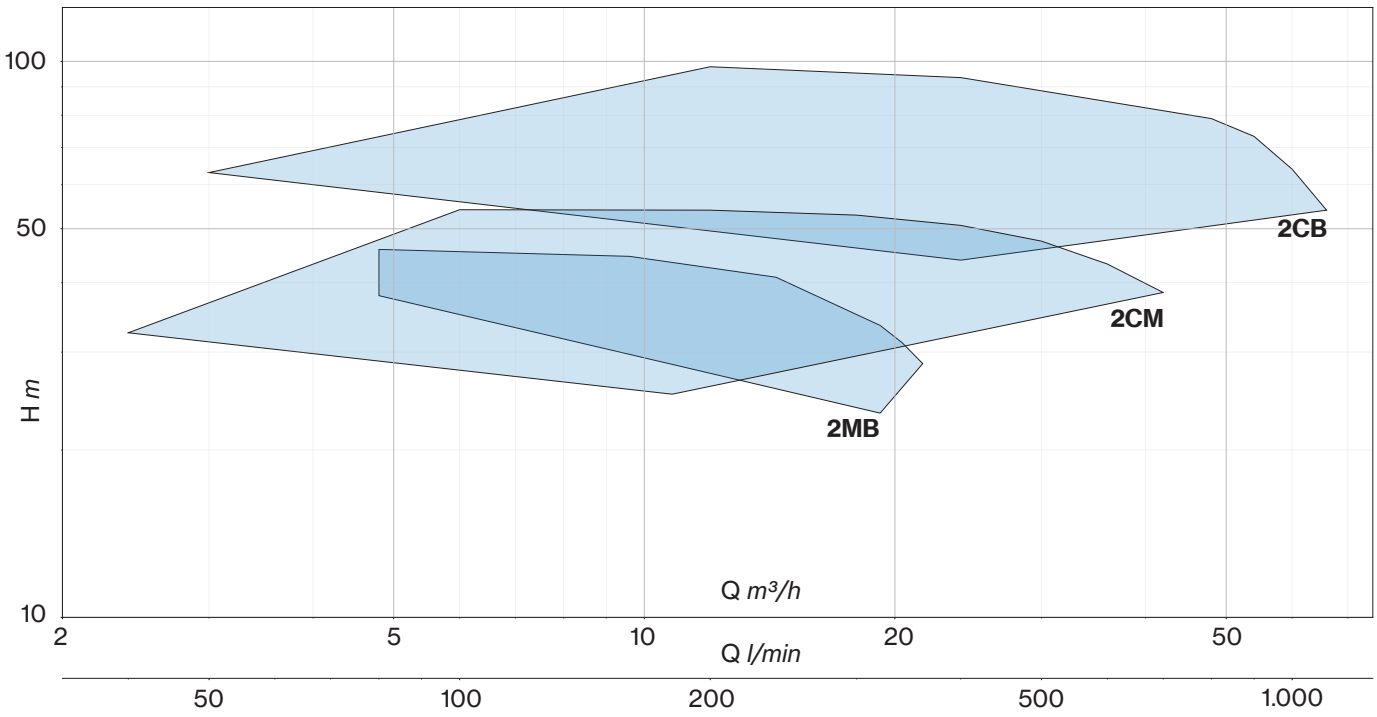


Number of pumps

Pump series

Motor
- [ ] 1~
- [T] 3~

Control type
- [ ] Fixed speed
- [/E] Variable speed EPIC
- [/A] Variable speed EPIC-A

Pump model

Motor bracket
- [/0] cast iron
- [/6] aluminum
- [ ] cast iron (only for CBT 800, 1000, 1250, 1500)

Impeller
- [0] Noryl
- [1] brass
- [ ] brass (only for CBT 800, 1000, 1250, 1500)

Manifolds
- [ ] Galvanized steel
- [CS] AISI304

vsd model (only for control type /A)

Power supply
(phase × voltage - frequency)

**2 CM [T] [/E] 164 [/0] [0] [CS] [ ] 1×230-50**



*Contact our Sales Department for the complete catalogue*

| TARGET 2CM | | TYPE - 50 Hz | | | | P2 (×2) | | Q (m³/h - l/min) | | | | | | | | |
|---|---|---|---|---|---|---|---|---|---|---|---|---|---|---|---|---|
| | | FIXED SPEED | | VARIABLE SPEED | | | | 0 | 2,4 | 4,8 | 7,2 | 9,6 | 10,8 | 13,2 | 14,4 | 15,6 |
| | | | | EPIC | EPIC-A | | | 0 | 40 | 80 | 120 | 160 | 180 | 220 | 240 | 260 |
| l/min | bar | 1~ 230V | 3~ 400V | 1~ 230V-in 3~ 230V-out | 3~ 400V-in 3~ 400V-out | HP | kW | H (m) | | | | | | | | |
| 100 | 3 | - | - | **2CMT/E100** | **2CMT/A100-304** | 1 | 0,74 | 33,0 | 32,5 | 31,5 | 29,6 | 26,8 | 25,2 | | | |
| 150 | 3,5 | **2CM164** | **2CMT164** | **2CMT/E164** | **2CMT/A164-304** | 2 | 1,5 | 39,4 | 39,1 | 38,6 | 37,2 | 35,2 | 33,8 | 27,2 | | |
| 200 | 4 | **2CM214** | **2CMT214** | - | **2CMT/A214-306** | 2,5 | 1,85 | 46,3 | 45,9 | 45,5 | 44,1 | 42,1 | 41,1 | 38,2 | 35,5 | |
| | 4,5 | **2CM314** | **2CMT314** | - | **2CMT/A314-306** | 3 | 2,2 | 53,2 | 52,7 | 52,1 | 50,8 | 48,8 | 47,6 | 45,0 | 42,9 | 39,2 |

| TARGET 2CM | | TYPE - 50 Hz | | | | P2 (×2) | | Q (m³/h - l/min) | | | | | | | |
|---|---|---|---|---|---|---|---|---|---|---|---|---|---|---|---|
| | | FIXED SPEED | | VARIABLE SPEED | | | | 0 | 6 | 12 | 18 | 24 | 30 | 36 | 42 |
| | | | | EPIC | EPIC-A | | | 0 | 100 | 200 | 300 | 400 | 500 | 600 | 700 |
| l/min | bar | 1~ 230V | 3~ 400V | 1~ 230V-in 3~ 230V-out | 3~ 400V-in 3~ 400V-out | HP | kW | H (m) | | | | | | | |
| 400 | 4 | - | **2CMT400** | - | **2CMT/A400-309** | 4 | 3 | 45,1 | 45,2 | 44,9 | 43,4 | 40,9 | 37,4 | 32,5 | |
| 500 | 4,5 | - | **2CMT550** | - | - | 5,5 | 4 | 54,1 | 54,1 | 54,0 | 52,9 | 50,7 | 47,5 | 43,2 | 38,4 |

| TARGET 2MB | | TYPE - 50 Hz | | | | P2 (×2) | | Q (m³/h - l/min) | | | | | | |
|---|---|---|---|---|---|---|---|---|---|---|---|---|---|---|
| | | FIXED SPEED | | VARIABLE SPEED | | | | 0 | 4,8 | 9,6 | 14,4 | 19,2 | 21,6 | 24,0 |
| | | | | EPIC | EPIC-A | | | 0 | 80 | 160 | 240 | 320 | 360 | 400 |
| l/min | bar | 1~ 230V | 3~ 400V | 1~ 230V-in 3~ 230V-out | 3~ 400V-in 3~ 400V-out | HP | kW | H (m) | | | | | | |
| 160 | 3,5 | **2MB150** | **2MBT150** | **2MBT/E150** | **2MBT/A150-304** | 2 | 1,5 | 39,2 | 40,2 | 39,5 | 35,7 | 28,7 | 23,9 | 18,0 |
| 240 | | **2MB200** | **2MBT200** | - | **2MBT/A200-304** | 2,5 | 1,85 | 44,9 | 45,6 | 44,8 | 41,7 | 35,2 | 30,8 | 25,8 |
| 300 | | **2MB300** | **2MBT300** | - | **2MBT/A300-306** | 3 | 2,2 | 49,5 | 49,4 | 48,3 | 45,8 | 39,8 | 35,8 | 31,1 |

| TARGET 2CB | | TYPE - 50 Hz | | | | P2 (×2) | | Q (m³/h - l/min) | | | | | | | | | | |
|---|---|---|---|---|---|---|---|---|---|---|---|---|---|---|---|---|---|---|
| | | FIXED SPEED | | VARIABLE SPEED | | | | 0 | 1,2 | 2,4 | 3,6 | 4,8 | 7,2 | 9,6 | 12,0 | 14,4 | 16,8 | 18 |
| | | | | EPIC | EPIC-A | | | 0 | 20 | 40 | 60 | 80 | 120 | 160 | 200 | 240 | 280 | 300 |
| l/min | bar | 1~ 230V | 3~ 400V | 1~ 230V-in 3~ 230V-out | 3~ 400V-in 3~ 400V-out | HP | kW | H (m) | | | | | | | | | | |
| 60 | 3,5 | **2CB100** | **2CBT100** | **2CBT/E100** | **2CBT/A100-304** | 1 | 0,74 | 42,0 | 40,8 | 39,4 | 37,4 | 34,7 | 29,2 | 21,0 | | | | |
| 180 | 4 | **2CB160** | **2CBT160** | **2CBT/E160** | **2CBT/A160-306** | 2 | 1,5 | 48,3 | 47,7 | 47,1 | 46,5 | 45,7 | 43,5 | 40,1 | 36,2 | 31,1 | | |
| 220 | 4 | **2CB210** | **2CBT210** | - | **2CBT/A210-306** | 2,5 | 1,85 | 54,9 | 54,4 | 53,8 | 53,0 | 52,3 | 50,5 | 47,1 | 43,1 | 38,3 | 32,4 | |
| 220 | 4,5 | **2CB310** | **2CBT310** | - | **2CBT/A310-306** | 3 | 2,2 | 61,4 | 60,9 | 60,3 | 59,8 | 59,2 | 57,1 | 53,6 | 49,3 | 44,2 | 38,3 | 35,2 |

| TARGET 2CB | | TYPE - 50 Hz | | P2 (×2) | | Q (m³/h - l/min) | | | | | | | | | | | |
|---|---|---|---|---|---|---|---|---|---|---|---|---|---|---|---|---|---|
| | | FIXED SPEED | VARIABLE SPEED | | | 0 | 3 | 6 | 9 | 12 | 15 | 18 | 21 | 24 | 27 | 30 | 33 |
| | | 3~ 400V | EPIC-A | | | 0 | 50 | 100 | 150 | 200 | 250 | 300 | 350 | 400 | 450 | 500 | 550 |
| l/min | bar | | 3~ 400V-in 3~ 400V-out | HP | kW | H (m) | | | | | | | | | | | |
| 250 | 5,5 | **2CBT400** | **2CBT/A400-309** | 4 | 3 | 63,6 | 63,1 | 62,0 | 60,3 | 58,2 | 55,5 | 52,3 | 48,4 | 43,9 | | | |
| 300 | 6,5 | **2CBT600** | - | 5,5 | 4 | 76,9 | 76,4 | 75,4 | 73,8 | 71,7 | 69,0 | 65,9 | 62,1 | 58,0 | 53,4 | | |
| 350 | 7,5 | **2CBT751** | - | 7,5 | 5,5 | 90,7 | 90,0 | 88,9 | 87,3 | 85,3 | 82,9 | 80,1 | 76,8 | 73,1 | 68,8 | 63,7 | |
| 350 | 8 | **2CBT900** | - | 10 | 7,5 | 97,5 | 96,6 | 95,4 | 93,7 | 91,7 | 89,2 | 86,5 | 83,3 | 79,8 | 75,2 | 71,2 | 66,4 |

| TARGET 2CB | | TYPE - 50 Hz | P2 (×2) | | Q (m³/h - l/min) | | | | | | | |
|---|---|---|---|---|---|---|---|---|---|---|---|---|
| | | FIXED SPEED | | | 0 | 12 | 24 | 36 | 48 | 54 | 60 | 66 |
| | | 3~ 400V | | | 0 | 200 | 400 | 600 | 800 | 900 | 1000 | 1100 |
| l/min | bar | | HP | kW | H (m) | | | | | | | |
| 600 | 5 | **2CBT800** | 7,5 | 5,5 | 70,0 | 68,5 | 63,9 | 57,1 | 45,3 | 38,2 | | |
| 800 | 5,5 | **2CBT1000** | 10 | 7,5 | 80,7 | 80,4 | 75,0 | 68,5 | 59,7 | 52,6 | 43,7 | |
| 900 | 6 | **2CBT1250** | 12,5 | 9,2 | 89,5 | 88,8 | 84,1 | 77,7 | 69,7 | 63,0 | 54,2 | 45,1 |
| 900 | 7 | **2CBT1500** | 15 | 11 | 98,3 | 97,8 | 93,5 | 85,7 | 78,9 | 73,3 | 64,0 | 54,0 |

# CENTRIFUGAL FLANGED

2CM (EN 733)

2CM/I (EN 733)

**Fixed speed and variable speed booster sets with two monobloc centrifugal flanged pumps**

## DESCRIPTION

Booster units with 2 monobloc horizontal centrifugal pumps of CM (EN 733) series, set on a single skid and connected in parallel by suction and delivery manifolds. These systems are widely used in water supplies, pressurization and fire-fighting systems, cooling, heating, irrigation, industrial and agricultural applications. To ensure a constant pressure to the system these booster sets can be equipped with EPIC-A or IPFC inverters.
To ensure proper operation of the booster set, pressure tanks of adequate capacity are required depending on constant or variable speed, pumps type, and applications.

## FEATURES

- Two monobloc horizontal centrifugal flanged pumps of CM (EN 733) series
- Cast iron pump body
- Suction manifold in galvanized steel with non-return and isolation valves
- Delivery manifold in galvanized steel with pressure gauge and isolation valves
- Base frame in galvanized steel
- EQ2SM(T) electronic or Q2ST electromechanical control panel with pressure switches for fixed speed version
- Inverter EPIC-A or IPFC, connected on each pump with pressure sensors, for variable speed version
- Pressure tanks, available on request, as accessory

## FUNCTIONING

In the fixed speed version as soon as pressure drops below the minimum set value on the pressure switch the first pump starts automatically. If water demand further increases, the second pump will run until the pressure rises above the maximum set value. When demand ends, the last pump turns off. All the pumps follow cycling changeover for equal work distribution. In case of one pump failure, the other pumps would continue to operate.

In the variable speed version when the system pressure drops below the desired level, the sensors detect it giving an input to the inverter to start the first pump at controlled speed. If the flow rate is not sufficient, the pressure continues to drop causing the second pump to start. As soon as the flow demand decreases, the pressure rises again and the second pump stop. The first pump continues to modulate its speed in order to regulate and maintain the set pressure until it turns off when the flow demand ends. Based on working hours, the inverters will alternate the starting order of pumps to ensure better wear distribution. Continuity of operation is ensured in the event of one pump or one inverter failure.

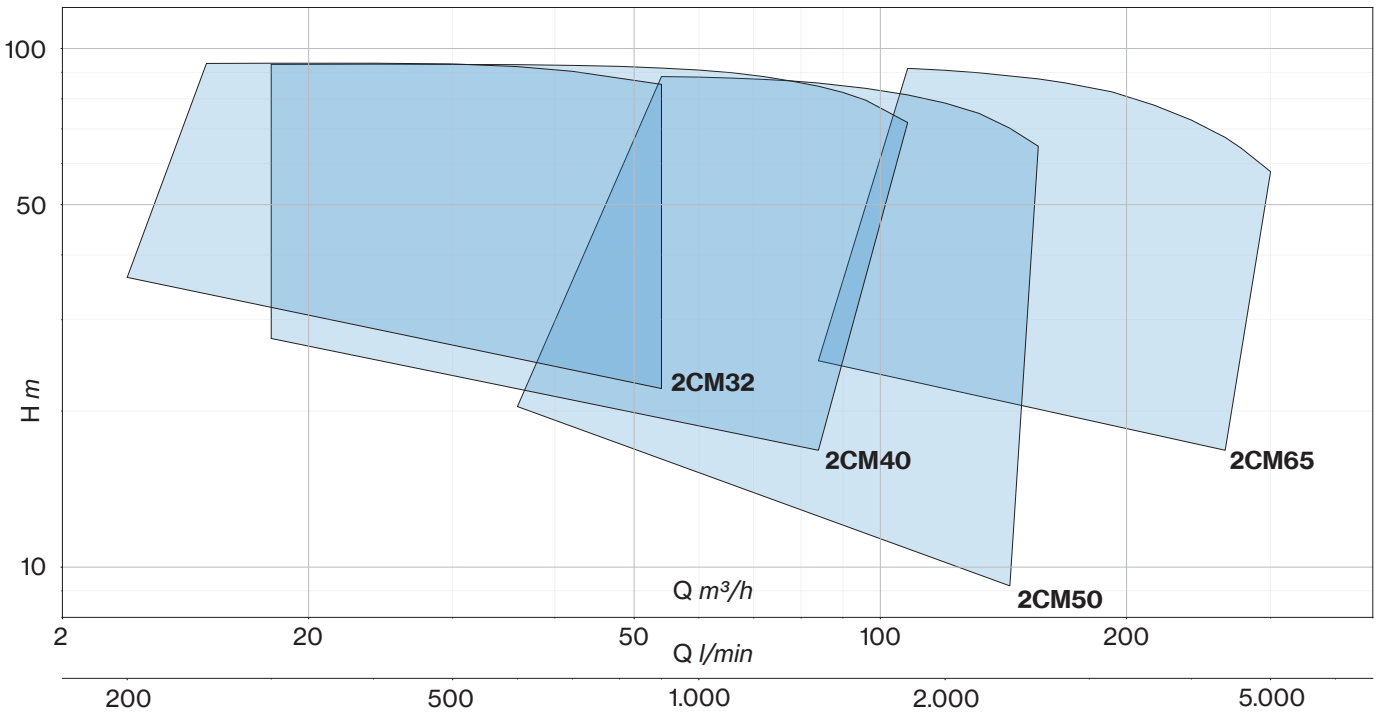


**2 CM /I 32-200B X -2E CS -314 3×400-50**

- Pump series
- Control type
  - Fixed speed
  - /A Variable speed EPIC-A
  - /I Variable speed IPFC
- Pump model
- Impeller
  - cast iron
  - B bronze
  - X AISI 316
- Manifolds
  - Galvanized steel
  - CS AISI304
- vsd model (only for control type /A or /I)
- Power supply (phase × voltage - frequency)
- Mech. seal and O-rings
  - standard
  - E EPDM
  - V FKM
  - 2E SiC-SiC-EPDM
  - 2V SiC-SiC-FKM
- Number of pumps

# CENTRIFUGAL FLANGED BOOSTER SETS

| TARGET 2CM | | TYPE - 50 Hz | | | P2 (×2) | | Q (m³/h - l/min) | | | | | | | | | | | |
|---|---|---|---|---|---|---|---|---|---|---|---|---|---|---|---|---|---|---|
| | | FIXED SPEED | VARIABLE SPEED | | | | 0 | 12 | 15 | 18 | 24 | 30 | 36 | 42 | 48 | 54 | 60 | 66 |
| | | 3~400V | EPIC-A | IPFC | | | 0 | 200 | 250 | 300 | 400 | 500 | 600 | 700 | 800 | 900 | 1000 | 1100 |
| m³/h | bar | | 3~400V-in 3~400V-out | | HP | kW | H (m) | | | | | | | | | | | |
| 36 | 3 | **2CM32-160A** | **2CM/A32-160A-309** | **2CM/I 32-160A-309** | 4 | 3 | 36,1 | 36,2 | 36,0 | 35,6 | 34,6 | 33,2 | 31,4 | 28,9 | 25,7 | 22,1 | | |
| | 3,5 | **2CM32-200C** | **-** | **2CM/I 32-200C-311** | 5,5 | 4 | 40,2 | 40,3 | 40,1 | 39,8 | 38,9 | 37,7 | 36,1 | 34,2 | 31,6 | 28,7 | | |
| 42 | 4 | **2CM32-200B** | **-** | **2CM/I 32-200B-314** | 7,5 | 5,5 | 48,3 | 48,0 | 47,9 | 47,6 | 46,7 | 45,5 | 44,2 | 42,6 | 40,5 | 37,9 | 35,4 | |
| | 5 | **2CM32-200A** | **-** | **2CM/I 32-200A-318** | 10 | 7,5 | 57,9 | 58,3 | 58,4 | 58,4 | 58,0 | 57,1 | 55,6 | 53,8 | 51,4 | 49,2 | 46,6 | 44,3 |
| | 6,5 | **2CM32-250C** | **-** | **2CM/I 32-250C-318** | 12,5 | 9,2 | 74,6 | | 72,8 | 72,5 | 71,9 | 70,5 | 68,8 | 66,6 | 64,1 | 61,3 | | |
| | 7,5 | **2CM32-250B** | **-** | **2CM/I 32-250B-325** | 15 | 11 | 84,8 | | 84,0 | 83,9 | 83,6 | 82,7 | 81,1 | 78,6 | 75,4 | 73,2 | | |
| | 8,5 | **2CM32-250A** | **-** | **2CM/I 32-250A-330** | 20 | 15 | 93,5 | | 93,6 | 93,7 | 93,7 | 93,4 | 92,3 | 90,4 | 87,7 | 85,3 | | |

| TARGET 2CM | | TYPE - 50 Hz | | | P2 (×2) | | Q (m³/h - l/min) | | | | | | | | | | | | | |
|---|---|---|---|---|---|---|---|---|---|---|---|---|---|---|---|---|---|---|---|---|
| | | FIXED SPEED | VARIABLE SPEED | | | | 0 | 18 | 36 | 42 | 48 | 54 | 60 | 66 | 72 | 78 | 84 | 90 | 96 | 108 |
| | | 3~400V | EPIC-A | IPFC | | | 0 | 300 | 600 | 700 | 800 | 900 | 1000 | 1100 | 1200 | 1300 | 1400 | 1500 | 1600 | 1800 |
| m³/h | bar | | 3~400V-in 3~400V-out | | HP | kW | H (m) | | | | | | | | | | | | | |
| 54 | 2 | **2CM40-125A** | **2CM/A40-125A-309** | **2CM/I 40-125A-309** | 4 | 3 | 26,8 | 27,6 | 27,2 | 26,5 | 25,7 | 24,6 | 23,4 | 22,0 | 20,3 | 18,5 | 16,8 | | | |
| | 3 | **2CM40-160A** | **-** | **2CM/I 40-160A-311** | 5,5 | 4 | 38,8 | 34,9 | 33,9 | 33,2 | 32,4 | 31,3 | 30,0 | 28,5 | 26,9 | 25,2 | 23,4 | | | |
| | 4 | **2CM40-200B** | **-** | **2CM/I 40-200B-314** | 7,5 | 5,5 | 44,6 | 45,5 | 44,5 | 43,5 | 42,3 | 41,0 | 39,3 | 37,2 | 34,9 | 32,3 | 29,4 | | | |
| | 5 | **2CM40-200A** | **-** | **2CM/I 40-200A-318** | 10 | 7,5 | 56,2 | 56,5 | 55,9 | 55,1 | 54,1 | 52,8 | 51,2 | 49,3 | 47,0 | 44,4 | 41,6 | | | |
| 66 | 5 | **2CM40-200AP** | **-** | **2CM/I 40-200AP-318** | 12,5 | 9,2 | 61,7 | 61,4 | 60,0 | 59,1 | 57,9 | 56,4 | 54,7 | 53,1 | 51,1 | 48,5 | 45,5 | 42,2 | | |
| | 6,5 | **2CM40-250B** | **-** | **2CM/I 40-250B-325** | 15 | 11 | 73,7 | 73,9 | 71,9 | 71,1 | 70,2 | 69,2 | 68,1 | 66,7 | 64,7 | 62,1 | | | | |
| 72 | 7,5 | **2CM40-250A** | **-** | **2CM/I 40-250A-330** | 20 | 15 | 82,6 | 84,6 | 84,3 | 83,4 | 82,4 | 81,3 | 80,0 | 78,5 | 76,9 | 75,4 | 72,8 | 69,0 | | |
| 84 | 8,5 | **2CM40-250BM** | **-** | **2CM/I 40-250BM-338** | 25 | 18,5 | 92,6 | 93,2 | 93,1 | 92,8 | 92,4 | 91,7 | 90,9 | 89,8 | 88,3 | 86,5 | 84,6 | 82,3 | 79,5 | 72,0 |

| TARGET 2CM | | TYPE - 50 Hz | | | P2 (×2) | | Q (m³/h - l/min) | | | | | | | | | | | | | |
|---|---|---|---|---|---|---|---|---|---|---|---|---|---|---|---|---|---|---|---|---|
| | | FIXED SPEED | VARIABLE SPEED | | | | 0 | 36 | 42 | 48 | 54 | 60 | 72 | 84 | 96 | 108 | 120 | 132 | 144 | 156 |
| | | 3~400V | EPIC-A | IPFC | | | 0 | 600 | 700 | 800 | 900 | 1000 | 1200 | 1400 | 1600 | 1800 | 2000 | 2200 | 2400 | 2600 |
| m³/h | bar | | 3~400V-in 3~400V-out | | HP | kW | H (m) | | | | | | | | | | | | | |
| 96 | 1,5 | **2CM50-125B** | **2CM/A50-125B-309** | **2CM/I 50-125B-309** | 4 | 3 | 20,0 | 20,4 | 20,3 | 20,1 | 19,9 | 19,6 | 18,7 | 17,6 | 16,4 | 15,0 | 13,2 | 11,3 | 9,2 | |
| | 2 | **2CM50-125A** | **-** | **2CM/I 50-125A-311** | 5,5 | 4 | 23,7 | 24,2 | 24,1 | 23,9 | 23,7 | 23,3 | 22,6 | 21,7 | 20,7 | 19,6 | 18,2 | 16,4 | 14,2 | |
| 108 | 2,5 | **2CM50-160B** | **-** | **2CM/I 50-160B-314** | 7,5 | 5,5 | 32,1 | | 33,5 | 33,4 | 33,1 | 32,7 | 31,6 | 30,2 | 28,3 | 26,2 | 23,9 | 21,5 | 18,9 | |
| 120 | 3 | **2CM50-160A** | **-** | **2CM/I 50-160A-318** | 10 | 7,5 | 38,1 | | 39,8 | 39,8 | 39,8 | 39,6 | 38,8 | 37,7 | 36,1 | 34,1 | 32,1 | 29,9 | 27,6 | 25,4 |
| | 3,5 | **2CM50-200C** | **-** | **2CM/I 50-200C-325** | 12,5 | 9,2 | 48,2 | | | 49,7 | 49,2 | 48,5 | 46,9 | 44,9 | 42,6 | 40,0 | 36,0 | 32,3 | 28,9 | |
| | 4 | **2CM50-200B** | **-** | **2CM/I 50-200B-325** | 15 | 11 | 53,1 | | | 54,6 | 54,1 | 53,5 | 52,2 | 50,4 | 48,1 | 45,5 | 42,7 | 38,8 | 35,0 | |
| | 5 | **2CM50-200A** | **-** | **2CM/I 50-200A-330** | 20 | 15 | 59,9 | | | 61,8 | 61,5 | 61,0 | 59,7 | 58,0 | 56,0 | 53,6 | 50,8 | 47,8 | 44,4 | 39,8 |
| | 6,5 | **2CM50-250B** | **-** | **2CM/I 50-250B-338** | 25 | 18,5 | 78,8 | | | | 78,4 | 78,0 | 77,0 | 75,1 | 72,9 | 70,3 | 66,9 | 62,9 | 58,5 | |
| | 7,5 | **2CM50-250A** | **-** | **2CM/I 50-250A-348** | 30 | 22 | 88,5 | | | | 88,3 | 88,1 | 87,2 | 85,8 | 83,8 | 81,4 | 78,5 | 75,0 | 70,2 | 64,8 |

| TARGET 2CM | | TYPE - 50 Hz | | P2 (×2) | | Q (m³/h - l/min) | | | | | | | | | | | | | |
|---|---|---|---|---|---|---|---|---|---|---|---|---|---|---|---|---|---|---|---|
| | | FIXED SPEED | VARIABLE SPEED | | | 0 | 84 | 90 | 108 | 132 | 156 | 168 | 192 | 216 | 240 | 264 | 276 | 288 | 300 |
| | | 3~400V | IPFC | | | 0 | 1400 | 1500 | 1800 | 2200 | 2600 | 2800 | 3200 | 3600 | 4000 | 4400 | 4600 | 4800 | 5000 |
| m³/h | bar | | 3~400V-in 3~400V-out | HP | kW | H (m) | | | | | | | | | | | | | |
| 192 | 2 | **2CM65-125A** | **2CM/I 65-125A-318** | 10 | 7,5 | 24,6 | 25,0 | 24,9 | 24,7 | 24,2 | 23,5 | 23,0 | 22,0 | 20,6 | 18,8 | 16,8 | | | |
| | 2,5 | **2CM65-160C** | **2CM/I 65-160C-318** | 12,5 | 9,2 | 28,9 | 30,6 | 30,5 | 30,0 | 29,1 | 27,9 | 27,2 | 25,3 | 22,9 | 20,2 | 17,5 | 16,0 | 13,9 | |
| | 3 | **2CM65-160B** | **2CM/I 65-160B-325** | 15 | 11 | 33,2 | 35,1 | 35,0 | 34,6 | 33,8 | 32,8 | 32,1 | 30,4 | 28,2 | 25,5 | 22,5 | 21,4 | 20,4 | |
| | 3,5 | **2CM65-160A** | **2CM/I 65-160A-338** | 20 | 15 | 40,1 | 42,5 | 42,5 | 42,3 | 41,8 | 41,0 | 40,4 | 38,9 | 37,1 | 35,3 | 32,8 | 31,7 | 30,9 | |
| 240 | 3 | **2CM65-200C** | **2CM/I 65-200C-338** | 20 | 15 | 44,4 | | | 46,1 | 44,7 | 43,2 | 42,4 | 40,3 | 37,5 | 33,7 | 28,9 | 26,8 | | |
| | 4 | **2CM65-200B** | **2CM/I 65-200B-338** | 25 | 18,5 | 51,7 | | | 53,9 | 52,7 | 51,3 | 50,4 | 48,6 | 45,9 | 43,0 | 39,4 | 37,1 | 34,6 | |
| | 5 | **2CM65-200A** | **2CM/I 65-200A-348** | 30 | 22 | 60,3 | | | 61,8 | 61,0 | 59,8 | 59,1 | 57,1 | 54,6 | 51,6 | 48,3 | 46,5 | 44,4 | |
| | 6 | **2CM65-250B** | **2CM/I 65-250B-365** | 40 | 30 | 80,6 | | | 80,6 | 78,4 | 75,7 | 74,1 | 70,4 | 66,1 | 61,0 | 54,7 | 51,0 | 47,3 | |
| | 7 | **2CM65-250A** | **2CM/I 65-250A-375** | 50 | 37 | 91,6 | | | 91,6 | 89,8 | 87,4 | 85,9 | 82,5 | 77,8 | 72,8 | 67,4 | 64,3 | 60,8 | 57,9 |

# MULTISTAGE

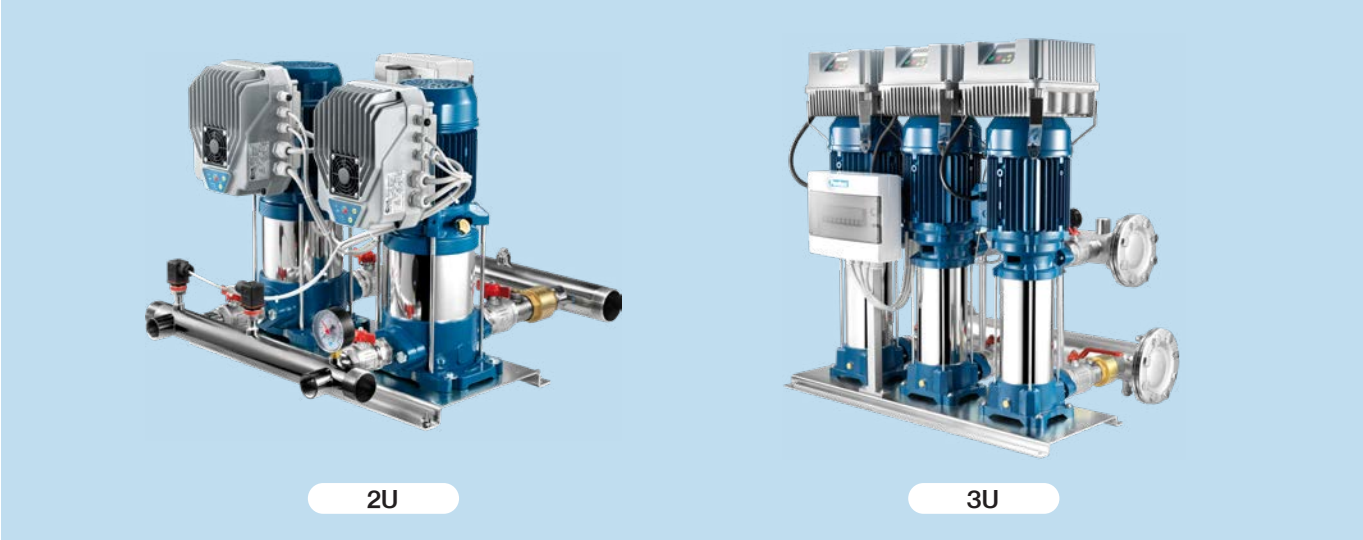


**Fixed speed and variable speed booster sets with two or three multistage pumps**

## DESCRIPTION

Fully automatic booster units with two (2U) or three (3U) multistage pumps of ULTRA series, set on a single skid and connected in parallel by suction and delivery manifolds. To ensure a constant pressure and deliver the highest comfort level they can be equipped with EPIC, EPIC-A or IPFC inverters.
These pressure boosting systems are suitable for water network supply in housing complexes, offices, hotels, shopping centers, industrial plants and for irrigation. It is required the installation of a pressure tank.

## FEATURES

- Horizontal or vertical multistage pumps of ULTRA series
- Inlet and outlet galvanized steel manifolds (stainless steees as option)
- Base frame in galvanized steel
- Non-return valves on suction side, one per pump
- Isolating valves, two per pump
- Pressure gauge
- Variable speed drive, one per pump
- Outlet-pressure sensors, one per pump
- Breaker box
- EQ2SM(T) electronic or Q2ST star-delta electromechanical control panel with pressure switches for fixed speed version
- Inverter EPIC, EPIC-A or IPFC, connected on each pump with pressure sensors, for variable speed version
- Pressure tanks, available on request, as accessory

## FUNCTIONING

In the fixed speed version as soon as pressure drops below the minimum set value on the pressure switch the first pump starts automatically. If water demand further increases, the second pump will run until the pressure rises above the maximum set value. When demand ends, the last pump turns off. All the pumps follow cycling changeover for equal work distribution. In case of one pump failure, the other pumps would continue to operate.
In the variable speed version when the system pressure drops below the desired level, the sensors detect it giving an input to the inverter to start the first pump at controlled speed. If the flow rate is not sufficient, the pressure continues to drop causing the second pump to start. As soon as the flow demand decreases, the pressure rises again and the second pump stop. The first pump continues to modulate its speed in order to regulate and maintain the set pressure until it turns off when the flow demand ends. Based on working hours, the inverters will alternate the starting order of pumps to ensure better wear distribution. Continuity of operation is ensured in the event of one pump or one inverter failure.

## 2U

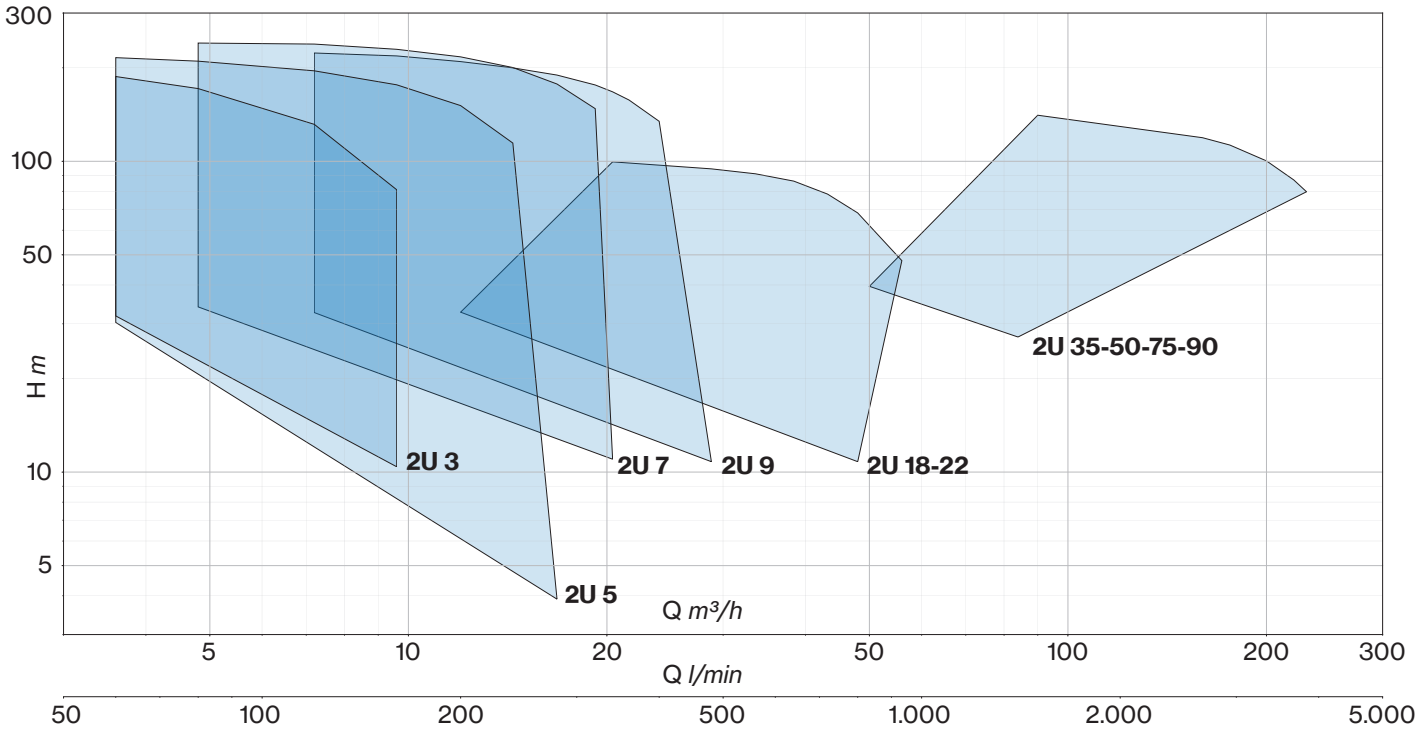
300
100
50
H m
10
5
2U 3
2U 5
2U 7
2U 9
2U 18-22
2U 35-50-75-90
Q m³/h
5
10
20
50
100
200
300
Q l/min
50
100
200
500
1.000
2.000
5.000

## 3U

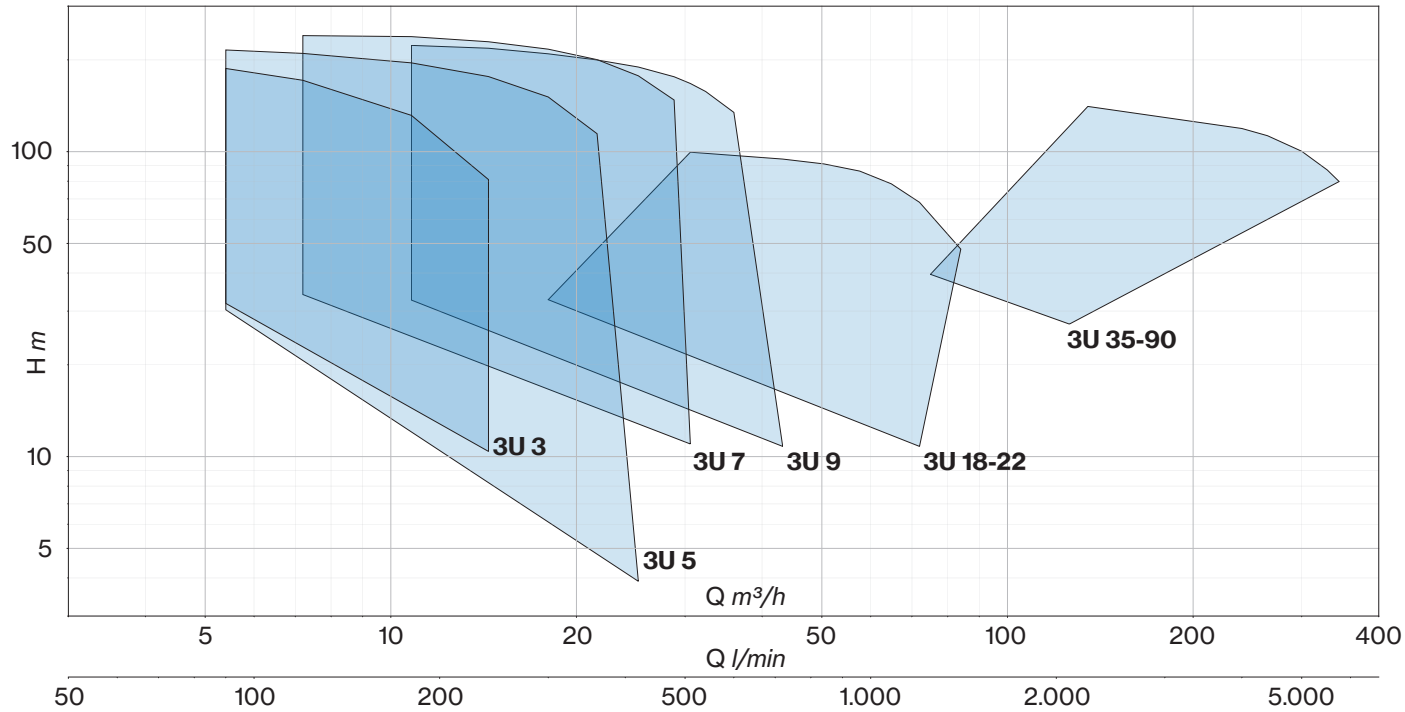
100
50
H m
10
5
3U 3
3U 5
3U 7
3U 9
3U 18-22
3U 35-90
Q m³/h
5
10
20
50
100
200
400
Q l/min
50
100
200
500
1.000
2.000
5.000

Number of pumps

ULTRA series

Nominal flow rate per pump (m³/h)

Control type
- (blank) Fixed speed
- /E Variable speed EPIC
- /A Variable speed EPIC-A
- /I Variable speed IPFC

Motor
- (blank) 1~
- T 3~

vsd model (only for control type /A or /I)

**2 U 3 SV /A-100/5T -2 CS -306 3×400-50**

Power supply
(phase × voltage - frequency)

Manifolds
- (blank) Galvanized steel
- CS AISI304

Version

Mech. seal
- (blank) standard
- 2 SiC-SiC

| | PUMP TYPE | MAX LIQUID TEMPERATURE | IMPELLERS MATERIAL | PUMP SHELL AND BODY MATERIAL | PUMP AND MOTOR SHAFT |
|---|---|---|---|---|---|
| (blank) | Horizontal multistage | 35° C | Noryl® | AISI 304 | monoblock |
| S | | 110° C | AISI 304 | AISI 304 | |
| V | Vertical multistage, overlapped ports | 35° C | Noryl® | AISI 304 / cast iron | |
| SV | | 90° C | AISI 304 | AISI 304 / cast iron | |
| L | Vertical multistage, inline ports | 35° C | Noryl® | AISI 304 / cast iron | |
| LG | | 35° C | Noryl® | AISI 304 / cast iron | with coupling |
| SL | | 110° C | AISI 304 | AISI 304 / cast iron | monoblock |
| SLX | | 110° C | AISI 304 | AISI 304 | |
| SLG | | 110° C | AISI 304 | AISI 304 / cast iron | with coupling |
| SLXG | | 110° C | AISI 304 | AISI 304 | |
| HS | | 120° C | AISI 304 | AISI 304 / cast iron | |
| HX | | 120° C | AISI 316 | AISI 316 | |

# PERFORMANCE 2U HORIZONTAL

| TARGET 2U | | TYPE - 50 Hz | | | | P2 (×2) | | 2U Q (m³/h - l/min) | | | | | | | | | | | | |
|---|---|---|---|---|---|---|---|---|---|---|---|---|---|---|---|---|---|---|---|---|
| | | HORIZONTAL PUMPS | | | | | | | | | | | | | | | | | | |
| | | FIXED SPEED | | VARIABLE SPEED | | | | 0 | 4 | 5 | 7 | 10 | 12 | 14 | 17 | 19 | 20 | 22 | 24 | 29 |
| | | 2U | | 2U - EPIC | 2U - EPIC-A | | | 0 | 60 | 80 | 120 | 160 | 200 | 240 | 280 | 320 | 340 | 360 | 400 | 480 |
| m³/h | bar | 1~ 230V | 3~ 400V | 1~ 230V-in 3~ 400V-out | 3~ 400V-in 3~ 400V-out | HP | kW | H (m) | | | | | | | | | | | | |
| 6 | 2 | 3-90/4 | 3-90/4T | 3/E-90/4T | 3/A-90/4T-304 | 0,9 | 0,66 | 40,8 | 31,8 | 27,9 | 19,8 | 10,4 | | | | | | | | |
| | | 3S-90/4 | 3S-90/4T | 3S/E-90/4T | 3S/A-90/4T-304 | | | 44,3 | 36,4 | 33,2 | 24,5 | 13,9 | | | | | | | | |
| | 3 | 3-100/5 | 3-100/5T | 3/E-100/5T | 3/A-100/5T-304 | 1 | 0,75 | 52,2 | 40,8 | 36 | 25,4 | 14 | | | | | | | | |
| | | 3S-100/5 | 3S-100/5T | 3S/E-100/5T | 3S/A-100/5T-304 | | | 55,3 | 46,5 | 42,1 | 31,6 | 17,7 | | | | | | | | |
| | 4 | 3-120/6 | 3-120/6T | 3/E-120/6T | 3/A-120/6T-304 | 1,2 | 0,9 | 62,8 | 49,6 | 43,9 | 32,1 | 18,3 | | | | | | | | |
| | | 3S-120/6 | 3S-120/6T | 3S/E-120/6T | 3S/A-120/6T-304 | | | 66,6 | 56 | 50,7 | 38,1 | 22,4 | | | | | | | | |
| | 5 | 3-150/7 | 3-150/7T | 3/E-150/7T | 3/A-150/7T-304 | 1,5 | 1,1 | 77,1 | 68,4 | 62,3 | 46,5 | 25,7 | | | | | | | | |
| | | 3S-150/7 | 3S-150/7T | 3S/E-150/7T | 3S/A-150/7T-304 | | | 75,6 | 64,8 | 58,9 | 44,4 | 26,1 | | | | | | | | |
| 10 | 2 | 5-80/3 | 5-80/3T | 5/E-80/3T | 5/A-80/3T-304 | 0,8 | 0,6 | 33,4 | 30,3 | 29 | 26 | 22,5 | 17,6 | 12 | 3,9 | | | | | |
| | | 5S-80/3 | 5S-80/3T | 5S/E-80/3T | 5S/A-80/3T-304 | | | 34 | 31,1 | 29,9 | 27 | 23,6 | 19,1 | 13,1 | 6 | | | | | |
| | 3 | 5-120/4 | 5-120/4T | 5/E-120/4T | 5/A-120/4T-304 | 1,2 | 0,9 | 45,3 | 41,3 | 39,6 | 35,6 | 30,8 | 24,9 | 17,6 | 6,4 | | | | | |
| | | 5S-120/4 | 5S-120/4T | 5S/E-120/4T | 5S/A-120/4T-304 | | | 45,5 | 42,2 | 40,7 | 37,2 | 32,9 | 27,4 | 19,8 | 10,4 | | | | | |
| | 4 | 5-150/5 | 5-150/5T | 5/E-150/5T | 5/A-150/5T-304 | 1,5 | 1,1 | 57,6 | 55,6 | 54,2 | 50,5 | 45 | 37 | 27,4 | | | | | | |
| | | 5S-150/5 | 5S-150/5T | 5S/E-150/5T | 5S/A-150/5T-304 | | | 55,9 | 52,8 | 51,4 | 48,1 | 43,4 | 37,3 | 28,3 | 16,4 | | | | | |
| | 5 | 5-180/6 | 5-180/6T | 5/E-180/6T | 5/A-180/6T-304 | 2 | 1,5 | 69,1 | 66,5 | 64,8 | 60,1 | 53,2 | 43,8 | 32 | | | | | | |
| | | 5S-180/6 | 5S-180/6T | 5S/E-180/6T | 5S/A-180/6T-304 | | | 67 | 63,3 | 61,6 | 57,6 | 51,9 | 44,2 | 33,6 | 20,4 | | | | | |
| | 5,5 | 5-200/7 | 5-200/7T | 5/E-200/7T | 5/A-200/7T-304 | 2 | 15 | 80,6 | 77,1 | 75,1 | 69,6 | 61,3 | 50,4 | 35,8 | | | | | | |
| | | 5S-200/7 | 5S-200/7T | 5S/E-200/7T | 5S/A-200/7T-304 | | | 77,8 | 73,5 | 71,3 | 66,3 | 59,6 | 50,7 | 38 | 22,4 | | | | | |
| 14 | 2 | 7-120/3 | 7-120/3T | 7/E-120/3T | 7/A-120/3T-304 | 1,2 | 0,9 | 36,7 | | 34,0 | 32,0 | 29,6 | 26,5 | 23,0 | 18,6 | 13,8 | 11,0 | | | |
| | | 7S-120/3 | 7S-120/3T | 7S/E-120/3T | 7S/A-120/3T-304 | | | 35,6 | | 33,9 | 32,8 | 31,2 | 28,1 | 24,7 | 20,6 | 15,7 | 13,0 | 10,0 | | |
| | 3 | 7-180/4 | 7-180/4T | 7/E-180/4T | 7/A-180/4T-304 | 2 | 1,5 | 49,6 | | 48,4 | 46,7 | 43,8 | 39,9 | 34,9 | 28,9 | | | | | |
| | | 7S-180/4 | 7S-180/4T | 7S/E-180/4T | 7S/A-180/4T-304 | | | 46,7 | | 46,0 | 45,2 | 43,1 | 40,3 | 36,9 | 32,3 | 25,5 | | | | |
| | 4 | 7-250/5 | 7-250/5T | 7/E-250/5T | 7/A-250/5T-306 | 2,5 | 1,85 | 63,2 | | 62,1 | 60,3 | 56,9 | 52,1 | 46,2 | 39,0 | | | | | |
| | | 7S-250/5 | 7S-250/5T | 7S/E-250/5T | 7S/A-250/5T-306 | | | 58,5 | | 57,6 | 56,6 | 54,1 | 50,8 | 46,1 | 40,3 | 31,8 | | | | |
| | 5 | 7-300/6 | 7-300/6T | - | 7/A-300/6T-306 | 3 | 2,2 | 76,0 | | 75,1 | 73,1 | 69,2 | 63,6 | 56,8 | 48,2 | | | | | |
| | | 7S-300/6 | 7S-300/6T | - | 7S/A-300/6T-306 | | | 70,6 | | 69,9 | 68,7 | 65,8 | 61,8 | 56,6 | 49,7 | 39,3 | | | | |
| | 6 | - | 7-350/7T | - | 7/A-350/7T-306 | 3,5 | 2,57 | 89,0 | | 88,0 | 85,8 | 81,2 | 74,5 | 66,3 | 56,2 | | | | | |
| | | - | 7S-350/7T | - | 7S/A-350/7T-306 | | | 82,8 | | 82,0 | 80,6 | 77,2 | 72,3 | 66,0 | 57,4 | 46,4 | | | | |

| TARGET 2U | | TYPE - 50 Hz | | | | P2 (×2) | | 2U Q (m³/h - l/min) | | | | | | | | | | | | |
|---|---|---|---|---|---|---|---|---|---|---|---|---|---|---|---|---|---|---|---|---|
| | | HORIZONTAL PUMPS | | | | | | | | | | | | | | | | | | |
| | | FIXED SPEED | | VARIABLE SPEED | | | | 0 | 4 | 5 | 7 | 10 | 12 | 14 | 17 | 19 | 20 | 22 | 24 | 29 |
| | | 2U | | 2U - EPIC | 2U - EPIC-A | | | 0 | 60 | 80 | 120 | 160 | 200 | 240 | 280 | 320 | 340 | 360 | 400 | 480 |
| m³/h | bar | 1~ 230V | 3~ 400V | 1~ 230V-in 3~ 400V-out | 3~ 400V-in 3~ 400V-out | HP | kW | H (m) | | | | | | | | | | | | |
| 18 | 2 | 9-150/3 | 9-150/3T | 9/E-150/3T | 9/A-150/3T-304 | 1,5 | 1,1 | 35 | | | 32,8 | 31,7 | 30,2 | 28,5 | 26,5 | 24,1 | 22,7 | 21,2 | 17,9 | 14,3 |
| | | 9S-150/3 | 9S-150/3T | 9S/E-150/3T | 9S/A-150/3T-304 | | | 35,1 | | | 32,8 | 31,8 | 30,6 | 29 | 27,2 | 24,9 | 23,6 | 22,2 | 18,9 | 15,2 |
| | 3 | 9-200/4 | 9-200/4T | 9/E-200/4T | 9/A-200/4T-304 | 2 | 1,5 | 45,8 | | | 42,1 | 40,7 | 39,2 | 37,3 | 34,6 | 31,3 | 29,4 | 27,4 | 23 | 17,9 |
| | | 9S-200/4 | 9S-200/4T | 9S/E-200/4T | 9S/A-200/4T-304 | | | 45,8 | | | 42,7 | 41,5 | 39,7 | 37,8 | 35,6 | 32,7 | 30,9 | 29 | 24,6 | 19,8 |
| | 3,5 | 9-250/5 | 9-250/5T | - | 9/A-250/5T-306 | 2,5 | 1,85 | 56,9 | | | 52,2 | 50,4 | 48,5 | 46,1 | 42,9 | 38,8 | 36,4 | 33,8 | 28,2 | 22,3 |
| | | 9S-250/5 | 9S-250/5T | - | 9S/A-250/5T-306 | | | 57,1 | | | 53,1 | 51,6 | 49,5 | 47,2 | 44,3 | 40,6 | 38,4 | 35,8 | 30,2 | 24,4 |

| TARGET 2U | | TYPE - 50 Hz | | P2 (×2) | | 2U Q (m³/h - l/min) | | | | | | | | | | | | |
|---|---|---|---|---|---|---|---|---|---|---|---|---|---|---|---|---|---|---|
| | | HORIZONTAL PUMPS | | | | | | | | | | | | | | | | |
| | | FIXED SPEED | VARIABLE SPEED | | | 0 | 12 | 14 | 17 | 19 | 20 | 22 | 24 | 29 | 34 | 38 | 43 | 48 |
| | | 2U | 2U - EPIC-A | | | 0 | 200 | 240 | 280 | 320 | 340 | 360 | 400 | 480 | 560 | 640 | 720 | 800 |
| m³/h | bar | 3~ 400V | 3~ 400V-in 3~ 400V-out | HP | kW | H (m) | | | | | | | | | | | | |
| 36 | 2 | 18-250/3T | 18/A-250/3T-306 | 2,5 | 1,85 | 34,7 | 32,9 | 32,6 | 32,2 | 31,6 | 31,3 | 31,0 | 30,1 | 28,0 | 24,7 | 20,6 | 15,9 | 10,7 |
| | | 18S-250/3T | 18S/A-250/3T-306 | | | 33,8 | 31,6 | 31,0 | 30,2 | 29,4 | 28,9 | 28,4 | 27,4 | 25,4 | 23,2 | 20,4 | 16,3 | 11,5 |
| | 3 | 18-400/4T | 18/A-400/4T-309 | 4 | 3 | 47,1 | 45,4 | 45,2 | 44,9 | 44,3 | 44,0 | 43,6 | 42,6 | 40,0 | 36,0 | 30,6 | 24,6 | 17,8 |
| | | 18S-400/4T | 18S/A-400/4T-309 | | | 46,3 | 44,2 | 43,4 | 42,5 | 41,4 | 40,9 | 40,3 | 39,1 | 36,7 | 34,1 | 30,8 | 25,6 | 19,0 |

| TARGET | | TYPE - 50 Hz | | | | | | P2 | | 2U - Q (m³/h - l/min) | | | | | | | |
|---|---|---|---|---|---|---|---|---|---|---|---|---|---|---|---|---|---|
| | | VERTICAL PUMPS | | | | | | 2U (×2) 3U (×3) | | 0 | 3,6 | 4,8 | 7,2 | 9,6 | 12 | 14,4 | 16,8 |
| | | | | | | | | | | 0 | 60 | 80 | 120 | 160 | 200 | 240 | 280 |
| | | FIXED SPEED | | VARIABLE SPEED | | | | | | 3U - Q (m³/h - l/min) | | | | | | | |
| | | 2U/3U | | 2U EPIC | 2U/3U EPIC-A | 2U/3U IPFC | | | | 0 | 5,4 | 7,2 | 10,8 | 14,4 | 18 | 21,6 | 25,2 |
| | | | | | | | | | | 0 | 90 | 120 | 180 | 240 | 300 | 360 | 420 |
| m³/h | bar | 1~ 230V | 3~ 400V | 1~ 230V-in 3~ 400V-out | 3~ 400V-in 3~ 400V-out | 1~ 230V-in 3~ 230V-out | 3~ 400V-in 3~ 400V-out | HP | kW | H (m) | | | | | | | |
| (2U) 6 (3U) 9 | 3 | 3V-100/5 | 3V-100/5T | 3V/E-100/5T | 3V/A-100/5T-304 | 3V/I-100/5T-109 | 3V/I-100/5T-306 | 1 | 0,75 | 52,2 | 40,8 | 36 | 25,4 | 14 | | | |
| | | 3L-100/5 | 3L-100/5T | 3L/E-100/5T | 3L/A-100/5T-304 | 3L/I-100/5T-109 | 3L/I-100/5T-306 | | | | | | | | | | |
| | | 3SV-100/5 | 3SV-100/5T | 3SV/E-100/5T | 3SV/A-100/5T-304 | 3SV/I-100/5T-109 | 3SV/I-100/5T-306 | | | 55,3 | 46,5 | 42,1 | 31,6 | 17,7 | | | |
| | | 3SL-100/5 | 3SL-100/5T | 3SL/E-100/5T | 3SL/A-100/5T-304 | 3SL/I-100/5T-109 | 3SL/I-100/5T-306 | | | | | | | | | | |
| | 4 | 3V-120/6 | 3V-120/6T | 3V/E-120/6T | 3V/A-120/6T-304 | 3V/I-120/6T-109 | 3V/I-120/6T-306 | 1,2 | 0,9 | 62,8 | 49,6 | 43,9 | 32,1 | 18,3 | | | |
| | | 3L-120/6 | 3L-120/6T | 3L/E-120/6T | 3L/A-120/6T-304 | 3L/I-120/6T-109 | 3L/I-120/6T-306 | | | | | | | | | | |
| | | 3SV-120/6 | 3SV-120/6T | 3SV/E-120/6T | 3SV/A-120/6T-304 | 3SV/I-120/6T-109 | 3SV/I-120/6T-306 | | | 66,6 | 56 | 50,7 | 38,1 | 22,4 | | | |
| | | 3SL-120/6 | 3SL-120/6T | 3SL/E-120/6T | 3SL/A-120/6T-304 | 3SL/I-120/6T-109 | 3SL/I-120/6T-306 | | | | | | | | | | |
| | 5 | 3V-150/7 | 3V-150/7T | 3V/E-150/7T | 3V/A-150/7T-304 | 3V/I-150/7T-109 | 3V/I-150/7T-306 | 1,5 | 1,1 | 77,1 | 68,4 | 62,3 | 46,5 | 25,7 | | | |
| | | 3L-150/7 | 3L-150/7T | 3L/E-150/7T | 3L/A-150/7T-304 | 3L/I-150/7T-109 | 3L/I-150/7T-306 | | | | | | | | | | |
| | | 3SV-150/7 | 3SV-150/7T | 3SV/E-150/7T | 3SV/A-150/7T-304 | 3SV/I-150/7T-109 | 3SV/I-150/7T-306 | | | 75,6 | 64,8 | 58,9 | 44,4 | 26,1 | | | |
| | | 3SL-150/7 | 3SL-150/7T | 3SL/E-150/7T | 3SL/A-150/7T-304 | 3SL/I-150/7T-109 | 3SL/I-150/7T-306 | | | | | | | | | | |
| | 6 | 3V-180/8 | 3V-180/8T | 3V/E-180/8T | 3V/A-180/8T-304 | 3V/I-180/8T-109 | 3V/I-180/8T-306 | 2 | 1,5 | 88,1 | 77,6 | 70,2 | 51,3 | 26 | | | |
| | | 3L-180/8 | 3L-180/8T | 3L/E-180/8T | 3L/A-180/8T-304 | 3L/I-180/8T-109 | 3L/I-180/8T-306 | | | | | | | | | | |
| | | 3SV-180/8 | 3SV-180/8T | 3SV/E-180/8T | 3SV/A-180/8T-304 | 3SV/I-180/8T-109 | 3SV/I-180/8T-306 | | | 86,7 | 73,9 | 67,3 | 51 | 29,9 | | | |
| | | 3SL-180/8 | 3SL-180/8T | 3SL/E-180/8T | 3SL/A-180/8T-304 | 3SL/I-180/8T-109 | 3SL/I-180/8T-306 | | | | | | | | | | |
| | 7 | 3V-200/9 | 3V-200/9T | 3V/E-200/9T | 3V/A-200/9T-304 | 3V/I-200/9T-109 | 3V/I-200/9T-306 | 2 | 15 | 98,8 | 87,3 | 79,4 | 60 | 32,2 | | | |
| | | 3L-200/9 | 3L-200/9T | 3L/E-200/9T | 3L/A-200/9T-304 | 3L/I-200/9T-109 | 3L/I-200/9T-306 | | | | | | | | | | |
| | | 3SV-200/9 | 3SV-200/9T | 3SV/E-200/9T | 3SV/A-200/9T-304 | 3SV/I-200/9T-109 | 3SV/I-200/9T-306 | | | 97 | 82,5 | 74,7 | 56,4 | 32,9 | | | |
| | | 3SL-200/9 | 3SL-200/9T | 3SL/E-200/9T | 3SL/A-200/9T-304 | 3SL/I-200/9T-109 | 3SL/I-200/9T-306 | | | | | | | | | | |
| | 8 | 3V-250/10 | 3V-250/10T | 3V/E-250/10T | 3V/A-250/10T-306 | 3V/I-250/10T-114 | 3V/I-250/10T-306 | 2 | 15 | 109,3 | 96,3 | 87,5 | 65,3 | 34,5 | | | |
| | | 3L-250/10 | 3L-250/10T | 3L/E-250/10T | 3L/A-250/10T-306 | 3L/I-250/10T-114 | 3L/I-250/10T-306 | | | | | | | | | | |
| | | 3SV-250/10 | 3SV-250/10T | 3SV/E-250/10T | 3SV/A-250/10T-306 | 3SV/I-250/10T-114 | 3SV/I-250/10T-306 | | | 107,2 | 90,5 | 82 | 61,5 | 35,6 | | | |
| | | 3SL-250/10 | 3SL-250/10T | 3SL/E-250/10T | 3SL/A-250/10T-306 | 3SL/I-250/10T-114 | 3SL/I-250/10T-306 | | | | | | | | | | |
| | 9 | 3V-280/11 | 3V-280/11T | 3V/E-280/11T | 3V/A-280/11T-306 | 3V/I-280/11T-114 | 3V/I-280/11T-306 | 2,5 | 1,85 | 120,4 | 106,1 | 96,4 | 71,6 | 38,3 | | | |
| | | 3L-280/11 | 3L-280/11T | 3L/E-280/11T | 3L/A-280/11T-306 | 3L/I-280/11T-114 | 3L/I-280/11T-306 | | | | | | | | | | |
| | | 3SV-280/11 | 3SV-280/11T | 3SV/E-280/11T | 3SV/A-280/11T-306 | 3SV/I-280/11T-114 | 3SV/I-280/11T-306 | | | 117,2 | 98,8 | 89,8 | 66,8 | 37,3 | | | |
| | | 3SL-280/11 | 3SL-280/11T | 3SL/E-280/11T | 3SL/A-280/11T-306 | 3SL/I-280/11T-114 | 3SL/I-280/11T-306 | | | | | | | | | | |
| | 10 | 3V-300/12 | 3V-300/12T | - | 3V/A-300/12T-306 | 3V/I-300/12T-114 | 3V/I-300/12T-306 | 2,5 | 1,85 | 130,3 | 114,6 | 103,8 | 76,6 | 40,8 | | | |
| | | 3L-300/12 | 3L-300/12T | - | 3L/A-300/12T-306 | 3L/I-300/12T-114 | 3L/I-300/12T-306 | | | | | | | | | | |
| | | 3SV-300/12 | 3SV-300/12T | - | 3SV/A-300/12T-306 | 3SV/I-300/12T-114 | 3SV/I-300/12T-306 | | | 126,4 | 106,1 | 95,9 | 71,7 | 40 | | | |
| | | 3SL-300/12 | 3SL-300/12T | - | 3SL/A-300/12T-306 | 3SL/I-300/12T-114 | 3SL/I-300/12T-306 | | | | | | | | | | |
| | 12 | - | 3SLG-350/14T | - | 3SLG/A-350/14T-306 | 3SLG/I-350/14T-114 | 3SLG/I-350/14T-306 | 3 | 2,2 | 154,8 | 133,7 | 122,5 | 97,4 | 58,2 | | | |
| | 14 | - | 3SLG-380/16T | - | 3SLG/A-380/16T-309 | 3SLG/I-380/16T-114 | 3SLG/I-380/16T-309 | 4 | 3 | 177,5 | 154,5 | 141,3 | 109,4 | 67 | | | |
| | 15 | - | 3SLG-400/18T | - | 3SLG/A-400/18T-309 | - | 3SLG/I-400/18T-309 | 4 | 3 | 195,1 | 172,8 | 158 | 122,1 | 75,3 | | | |
| | 16 | - | 3SLG-450/20T | - | 3SLG/A-450/20T-309 | - | 3SLG/I-450/20T-309 | 4 | 3 | 218,3 | 187,4 | 171,4 | 131,5 | 81 | | | |
| (2U) 10 (3U) 15 | 3 | 5V-120/4 | 5V-120/4T | 5V/E-120/4T | 5V/A-120/4T-304 | 5V/I-120/4T-109 | 5V/I-120/4T-306 | 1,2 | 0,9 | 45,3 | 41,3 | 39,6 | 35,6 | 30,8 | 24,9 | 17,6 | 6,4 |
| | | 5L-120/4 | 5L-120/4T | 5L/E-120/4T | 5L/A-120/4T-304 | 5L/I-120/4T-109 | 5L/I-120/4T-306 | | | | | | | | | | |
| | | 5SV-120/4 | 5SV-120/4T | 5SV/E-120/4T | 5SV/A-120/4T-304 | 5SV/I-120/4T-109 | 5SV/I-120/4T-306 | | | 45,5 | 42,2 | 40,7 | 37,2 | 32,9 | 27,4 | 19,8 | 10,4 |
| | | 5SL-120/4 | 5SL-120/4T | 5SL/E-120/4T | 5SL/A-120/4T-304 | 5SL/I-120/4T-109 | 5SL/I-120/4T-306 | | | | | | | | | | |
| | 4 | 5V-150/5 | 5V-150/5T | 5V/E-150/5T | 5V/A-150/5T-304 | 5V/I-150/5T-109 | 5V/I-150/5T-306 | 1,5 | 1,1 | 57,6 | 55,6 | 54,2 | 50,5 | 45,0 | 37,0 | 27,4 | |
| | | 5L-150/5 | 5L-150/5T | 5L/E-150/5T | 5L/A-150/5T-304 | 5L/I-150/5T-109 | 5L/I-150/5T-306 | | | | | | | | | | |
| | | 5SV-150/5 | 5SV-150/5T | 5SV/E-150/5T | 5SV/A-150/5T-304 | 5SV/I-150/5T-109 | 5SV/I-150/5T-306 | | | 55,9 | 52,8 | 51,4 | 48,1 | 43,4 | 37,3 | 28,3 | 16,4 |
| | | 5SL-150/5 | 5SL-150/5T | 5SL/E-150/5T | 5SL/A-150/5T-304 | 5SL/I-150/5T-109 | 5SL/I-150/5T-306 | | | | | | | | | | |
| | 5 | 5V-180/6 | 5V-180/6T | 5V/E-180/6T | 5V/A-180/6T-304 | 5V/I-180/6T-109 | 5V/I-180/6T-306 | 2 | 1,5 | 69,1 | 66,5 | 64,8 | 60,1 | 53,2 | 43,8 | 32,0 | |
| | | 5L-180/6 | 5L-180/6T | 5L/E-180/6T | 5L/A-180/6T-304 | 5L/I-180/6T-109 | 5L/I-180/6T-306 | | | | | | | | | | |
| | | 5SV-180/6 | 5SV-180/6T | 5SV/E-180/6T | 5SV/A-180/6T-304 | 5SV/I-180/6T-109 | 5SV/I-180/6T-306 | | | 67 | 63,3 | 61,6 | 57,6 | 51,9 | 44,2 | 33,6 | 20,4 |
| | | 5SL-180/6 | 5SL-180/6T | 5SL/E-180/6T | 5SL/A-180/6T-304 | 5SL/I-180/6T-109 | 5SL/I-180/6T-306 | | | | | | | | | | |
| | 5,5 | 5V-200/7 | 5V-200/7T | 5V/E-200/7T | 5V/A-200/7T-304 | 5V/I-200/7T-109 | 5V/I-200/7T-306 | 2 | 15 | 80,6 | 77,1 | 75,1 | 69,6 | 61,3 | 50,4 | 35,8 | |
| | | 5L-200/7 | 5L-200/7T | 5L/E-200/7T | 5L/A-200/7T-304 | 5L/I-200/7T-109 | 5L/I-200/7T-306 | | | | | | | | | | |
| | | 5SV-200/7 | 5SV-200/7T | 5SV/E-200/7T | 5SV/A-200/7T-304 | 5SV/I-200/7T-109 | 5SV/I-200/7T-306 | | | 77,8 | 73,5 | 71,3 | 66,3 | 59,6 | 50,7 | 38,0 | 22,4 |
| | | 5SL-200/7 | 5SL-200/7T | 5SL/E-200/7T | 5SL/A-200/7T-304 | 5SL/I-200/7T-109 | 5SL/I-200/7T-306 | | | | | | | | | | |
| | 6,5 | 5V-250/8 | 5V-250/8T | 5V/E-250/8T | 5V/A-250/8T-306 | 5V/I-250/8T-114 | 5V/I-250/8T-306 | 2,5 | 1,85 | 92 | 88,2 | 85,8 | 79,2 | 70,1 | 57,2 | 41,1 | |
| | | 5L-250/8 | 5L-250/8T | 5L/E-250/8T | 5L/A-250/8T-306 | 5L/I-250/8T-114 | 5L/I-250/8T-306 | | | | | | | | | | |
| | | 5SV-250/8 | 5SV-250/8T | 5SV/E-250/8T | 5SV/A-250/8T-306 | 5SV/I-250/8T-114 | 5SV/I-250/8T-306 | | | 89,2 | 83,9 | 81,6 | 76,2 | 68,4 | 58,3 | 43,2 | 24,6 |
| | | 5SL-250/8 | 5SL-250/8T | 5SL/E-250/8T | 5SL/A-250/8T-306 | 5SL/I-250/8T-114 | 5SL/I-250/8T-306 | | | | | | | | | | |

# PERFORMANCE 2U/3U VERTICAL

| TARGET | | TYPE - 50 Hz | | | | | P2 | | 2U - Q (m³/h - l/min) | | | | | | | | |
|---|---|---|---|---|---|---|---|---|---|---|---|---|---|---|---|---|---|
| | | VERTICAL PUMPS | | | | | 2U (×2) 3U (×3) | | 0 | 3,6 | 4,8 | 7,2 | 9,6 | 12 | 14,4 | 16,8 | 19,2 |
| | | | | | | | | | 0 | 60 | 80 | 120 | 160 | 200 | 240 | 280 | 320 |
| | | FIXED SPEED | | VARIABLE SPEED | | | | | 3U - Q (m³/h - l/min) | | | | | | | | |
| | | 2U/3U | | 2U/3U EPIC-A | 2U/3U IPFC | | | | 0 | 5,4 | 7,2 | 10,8 | 14,4 | 18 | 21,6 | 25,2 | 28,8 |
| | | | | | | | | | 0 | 90 | 120 | 180 | 240 | 300 | 360 | 420 | 480 |
| m³/h | bar | 1~ 230V | 3~ 400V | 3~ 400V-in 3~ 400V-out | 1~ 230V-in 3~ 230V-out | 3~ 400V-in 3~ 400V-out | HP | kW | H (m) | | | | | | | | |
| (2U) 10 (3U) 15 | 7 | 5V-280/9 | 5V-280/9T | 5V/A-280/9T-306 | 5V/I-280/9T-114 | 5V/I-280/9T-306 | 2,5 | 1,85 | 103,3 | 98,9 | 96,2 | 88,8 | 78,4 | 64,1 | 45,3 | | |
| | | 5L-280/9 | 5L-280/9T | 5L/A-280/9T-306 | 5L/I-280/9T-114 | 5L/I-280/9T-306 | | | | | | | | | | | |
| | | 5SV-280/9 | 5SV-280/9T | 5SV/A-280/9T-306 | 5SV/I-280/9T-114 | 5SV/I-280/9T-306 | | | 99,7 | 93,7 | 90,9 | 84,1 | 75,2 | 61,1 | 47,4 | 25,9 | |
| | | 5SL-280/9 | 5SL-280/9T | 5SL/A-280/9T-306 | 5SL/I-280/9T-114 | 5SL/I-280/9T-306 | | | | | | | | | | | |
| | 8 | 5V-300/10 | 5V-300/10T | 5V/A-300/10T-306 | 5V/I-300/10T-114 | 5V/I-300/10T-306 | 3 | 2,2 | 115,1 | 110,6 | 107,6 | 99,5 | 87,6 | 72,1 | 50,7 | | |
| | | 5L-300/10 | 5L-300/10T | 5L/A-300/10T-306 | 5L/I-300/10T-114 | 5L/I-300/10T-306 | | | | | | | | | | | |
| | | 5SV-300/10 | 5SV-300/10T | 5SV/A-300/10T-306 | 5SV/I-300/10T-114 | 5SV/I-300/10T-306 | | | 112,2 | 105,4 | 102,4 | 95,3 | 85,6 | 72,6 | 54,8 | 31,0 | |
| | | 5SL-300/10 | 5SL-300/10T | 5SL/A-300/10T-306 | 5SL/I-300/10T-114 | 5SL/I-300/10T-306 | | | | | | | | | | | |
| | 9 | - | 5V-350/11T | 5V/A-350/11T-306 | 5V/I-350/11T-114 | 5V/I-350/11T-306 | 3,5 | 2,57 | 127,6 | 122,5 | 119,4 | 110,8 | 98,0 | 80,8 | 57,4 | | |
| | | - | 5L-350/11T | 5L/A-350/11T-306 | 5L/I-350/11T-114 | 5L/I-350/11T-306 | | | | | | | | | | | |
| | | - | 5SV-350/11T | 5SV/A-350/11T-306 | 5SV/I-350/11T-114 | 5SV/I-350/11T-306 | | | 125,1 | 117,6 | 114,3 | 106,1 | 95,5 | 80,9 | 60,9 | 34,8 | |
| | | - | 5SL-350/11T | 5SL/A-350/11T-306 | 5SL/I-350/11T-114 | 5SL/I-350/11T-306 | | | | | | | | | | | |
| | 10 | - | 5V-380/12T | 5V/A-380/12T-309 | - | 5V/I-380/12T-309 | 4 | 3 | 140,3 | 135,4 | 132,1 | 123,2 | 109,5 | 90,1 | 66,5 | | |
| | | - | 5L-380/12T | 5L/A-380/12T-309 | - | 5L/I-380/12T-309 | | | | | | | | | | | |
| | | - | 5SV-380/12T | 5SV/A-380/12T-309 | - | 5SV/I-380/12T-309 | | | 135,7 | 128,9 | 125,6 | 117,7 | 106,3 | 91,3 | 70,2 | 41,5 | |
| | | - | 5SL-380/12T | 5SL/A-380/12T-309 | - | 5SL/I-380/12T-309 | | | | | | | | | | | |
| | 12 | - | 5SLG-400/14T | 5SLG/A-400/14T-309 | - | 5SLG/I-400/14T-309 | 4 | 3 | 159,2 | 150,7 | 146,7 | 136,6 | 122,9 | 105,5 | 79,0 | | |
| | 14 | - | 5SLG-450/16T | 5SLG/A-450/16T-309 | - | 5SLG/I-450/16T-309 | 5,5 | 4 | 182,0 | 173,2 | 169,1 | 158,0 | 142,9 | 122,9 | 93,6 | | |
| | 16 | - | 5SLG-550/18T | - | - | 5SLG/I-550/18T-311 | 5,5 | 4 | 204,4 | 194,4 | 189,5 | 176,5 | 159,6 | 136,3 | 103,2 | | |
| | 18 | - | 5SLG-600/20T | - | - | 5SLG/I-600/20T-311 | 5,5 | 4 | 226,7 | 215,5 | 210,0 | 195,5 | 176,3 | 151,1 | 114,5 | | |
| (2U) 14 (3U) 21 | 3 | 7V-180/4 | 7V-180/4T | 7V/A-180/4T-304 | 7V/I-180/4T-109 | 7V/I-180/4T-306 | 2 | 1,5 | 49,6 | | 48,4 | 46,7 | 43,8 | 39,9 | 34,9 | 28,9 | |
| | | 7L-180/4 | 7L-180/4T | 7L/A-180/4T-304 | 7L/I-180/4T-109 | 7L/I-180/4T-306 | | | | | | | | | | | |
| | | 7SV-180/4 | 7SV-180/4T | 7SV/A-180/4T-304 | 7SV/I-180/4T-109 | 7SV/I-180/4T-306 | | | 46,7 | | 46,0 | 45,2 | 43,1 | 40,3 | 36,9 | 32,3 | 25,5 |
| | | 7SL-180/4 | 7SL-180/4T | 7SL/A-180/4T-304 | 7SL/I-180/4T-109 | 7SL/I-180/4T-306 | | | | | | | | | | | |
| | 4 | 7V-250/5 | 7V-250/5T | 7V/A-250/5T-306 | 7V/I-250/5T-114 | 7V/I-250/5T-306 | 2,5 | 1,85 | 63,2 | | 62,1 | 60,3 | 56,9 | 52,1 | 46,2 | 39,0 | |
| | | 7L-250/5 | 7L-250/5T | 7L/A-250/5T-306 | 7L/I-250/5T-114 | 7L/I-250/5T-306 | | | | | | | | | | | |
| | | 7SV-250/5 | 7SV-250/5T | 7SV/A-250/5T-306 | 7SV/I-250/5T-114 | 7SV/I-250/5T-306 | | | 58,5 | | 57,6 | 56,6 | 54,1 | 50,8 | 46,1 | 40,3 | 31,8 |
| | | 7SL-250/5 | 7SL-250/5T | 7SL/A-250/5T-306 | 7SL/I-250/5T-114 | 7SL/I-250/5T-306 | | | | | | | | | | | |
| | 5 | 7V-300/6 | 7V-300/6T | 7V/A-300/6T-306 | 7V/I-300/6T-114 | 7V/I-300/6T-306 | 3 | 2,2 | 76,0 | | 75,1 | 73,1 | 69,2 | 63,6 | 56,8 | 48,2 | |
| | | 7L-300/6 | 7L-300/6T | 7L/A-300/6T-306 | 7L/I-300/6T-114 | 7L/I-300/6T-306 | | | | | | | | | | | |
| | | 7SV-300/6 | 7SV-300/6T | 7SV/A-300/6T-306 | 7SV/I-300/6T-114 | 7SV/I-300/6T-306 | | | 70,6 | | 69,9 | 68,7 | 65,8 | 61,8 | 56,6 | 49,7 | 39,3 |
| | | 7SL-300/6 | 7SL-300/6T | 7SL/A-300/6T-306 | 7SL/I-300/6T-114 | 7SL/I-300/6T-306 | | | | | | | | | | | |
| | 6 | - | 7V-350/7T | 7V/A-350/7T-306 | 7V/I-350/7T-114 | 7V/I-350/7T-306 | 3,5 | 2,57 | 89,0 | | 88,0 | 85,8 | 81,2 | 74,5 | 66,3 | 56,2 | |
| | | - | 7L-350/7T | 7L/A-350/7T-306 | 7L/I-350/7T-114 | 7L/I-350/7T-306 | | | | | | | | | | | |
| | | - | 7SV-350/7T | 7SV/A-350/7T-306 | 7SV/I-350/7T-114 | 7SV/I-350/7T-306 | | | 82,8 | | 82,0 | 80,6 | 77,2 | 72,3 | 66,0 | 57,4 | 46,4 |
| | | - | 7SL-350/7T | 7SL/A-350/7T-306 | 7SL/I-350/7T-114 | 7SL/I-350/7T-306 | | | | | | | | | | | |
| | 7 | - | 7V-400/8T | 7V/A-400/8T-309 | - | 7V/I-400/8T-309 | 4 | 3 | 102,3 | | 101,0 | 98,2 | 92,4 | 84,4 | 74,6 | 62,4 | |
| | | - | 7L-400/8T | 7L/A-400/8T-309 | - | 7L/I-400/8T-309 | | | | | | | | | | | |
| | | - | 7SV-400/8T | 7SV/A-400/8T-309 | - | 7SV/I-400/8T-309 | | | 94,8 | | 94,3 | 92,5 | 88,6 | 83,2 | 76,4 | 66,2 | 52,6 |
| | | - | 7SL-400/8T | 7SL/A-400/8T-309 | - | 7SL/I-400/8T-309 | | | | | | | | | | | |
| | 8 | - | 7V-450/9T | 7V/A-450/9T-309 | - | 7V/I-450/9T-309 | 4,5 | 3,37 | 115,2 | | 114,4 | 111,4 | 105,6 | 97,1 | 86,3 | 73,1 | |
| | | - | 7L-450/9T | 7L/A-450/9T-309 | - | 7L/I-450/9T-309 | | | | | | | | | | | |
| | | - | 7SV-450/9T | 7SV/A-450/9T-309 | - | 7SV/I-450/9T-309 | | | 107,4 | | 106,9 | 105,2 | 101,1 | 95,3 | 87,7 | 76,3 | 61,0 |
| | | - | 7SL-450/9T | 7SL/A-450/9T-309 | - | 7SL/I-450/9T-309 | | | | | | | | | | | |
| | 9 | - | 7V-550/10T | 7V/A-550/10T-309 | - | 7V/I-550/10T-309 | 5,5 | 4 | 128,1 | | 128,0 | 124,9 | 118,7 | 109,4 | 97,6 | 83,0 | |
| | | - | 7L-550/10T | 7L/A-550/10T-309 | - | 7L/I-550/10T-309 | | | | | | | | | | | |
| | | - | 7SV-550/10T | 7SV/A-550/10T-309 | - | 7SV/I-550/10T-309 | | | 119,8 | | 119,6 | 118,4 | 113,9 | 107,7 | 99,4 | 87,0 | 70,4 |
| | | - | 7SL-550/10T | 7SL/A-550/10T-309 | - | 7SL/I-550/10T-309 | | | | | | | | | | | |
| | 11 | - | 7SLG-750/12T | - | - | 7SLG/I-750/12T-311 | 7,5 | 5,5 | 143,7 | | 143,7 | 142,6 | 137,0 | 129,6 | 119,8 | 105,6 | 87,0 |
| | 13 | - | 7SLG-800/14T | - | - | 7SLG/I-800/14T-314 | 7,5 | 5,5 | 167,6 | | 167,3 | 165,9 | 159,6 | 151,0 | 139,5 | 122,6 | 100,3 |
| | 15 | - | 7SLG-900/16T | - | - | 7SLG/I-900/16T-314 | 7,5 | 5,5 | 191,5 | | 191,2 | 189,3 | 181,7 | 171,5 | 157,7 | 137,6 | 111,1 |
| | 17 | - | 7SLG-950/18T | - | - | 7SLG/I-950/18T-314 | 10 | 7,5 | 215,5 | | 215,7 | 213,9 | 205,8 | 194,7 | 179,8 | 159,0 | 132,3 |
| | 19 | - | 7SLG-1000/20T | - | - | 7SLG/I-1000/20T-318 | 10 | 7,5 | 240,3 | | 240,2 | 238,4 | 229,3 | 216,8 | 200,3 | 177,3 | 147,7 |

# PERFORMANCE 2U/3U VERTICAL

| TARGET | | TYPE - 50 Hz | | | | | | P2 | | 2U - Q (m³/h - l/min) | | | | | | | | |
|---|---|---|---|---|---|---|---|---|---|---|---|---|---|---|---|---|---|---|
| | | VERTICAL PUMPS | | | | | | 2U (×2) 3U (×3) | | 0 | 12 | 14,4 | 16,8 | 19,2 | 20,4 | 21,6 | 24 | 28,8 |
| | | | | | | | | | | 0 | 200 | 240 | 280 | 320 | 340 | 360 | 400 | 480 |
| | | FIXED SPEED | | VARIABLE SPEED | | | | | | 3U - Q (m³/h - l/min) | | | | | | | | |
| | | 2U/3U | | 2U EPIC | 2U/3U EPIC-A | 2U/3U IPFC | | | | 0 | 18 | 21,6 | 25,2 | 28,8 | 30,6 | 32,4 | 36 | 43,2 |
| | | | | | | | | | | 0 | 300 | 360 | 420 | 480 | 510 | 540 | 600 | 720 |
| m³/h | bar | 1~ 230V | 3~ 400V | 1~ 230V-in 3~ 400V-out | 3~ 400V-in 3~ 400V-out | 1~ 230V-in 3~ 230V-out | 3~ 400V-in 3~ 400V-out | HP | kW | H (m) | | | | | | | | |
| (2U) 18 (3U) 27 | 3 | 9V-200/4 | 9V-200/4T | 9V/E-200/4T | 9V/A-200/4T-304 | 9V/I-200/4T-109 | 9V/I-200/4T-306 | 2 | 1,5 | 45,8 | 39,2 | 37,3 | 34,6 | 31,3 | 29,4 | 27,4 | 23,0 | 17,9 |
| | | 9L-200/4 | 9L-200/4T | 9L/E-200/4T | 9L/A-200/4T-304 | 9L/I-200/4T-109 | 9L/I-200/4T-306 | | | | | | | | | | | |
| | | 9SV-200/4 | 9SV-200/4T | 9SV/E-200/4T | 9SV/A-200/4T-304 | 9SV/I-200/4T-109 | 9SV/I-200/4T-306 | | | 45,8 | 39,7 | 37,8 | 35,6 | 32,7 | 30,9 | 29,0 | 24,6 | 19,8 |
| | | 9SL-200/4 | 9SL-200/4T | 9SL/E-200/4T | 9SL/A-200/4T-304 | 9SL/I-200/4T-109 | 9SL/I-200/4T-306 | | | | | | | | | | | |
| | 3,5 | 9V-250/5 | 9V-250/5T | - | 9V/A-250/5T-306 | 9V/I-250/5T-114 | 9V/I-250/5T-306 | 2,5 | 1,85 | 56,9 | 48,5 | 46,1 | 42,9 | 38,8 | 36,4 | 33,8 | 28,2 | 22,3 |
| | | 9L-250/5 | 9L-250/5T | - | 9L/A-250/5T-306 | 9L/I-250/5T-114 | 9L/I-250/5T-306 | | | | | | | | | | | |
| | | 9SV-250/5 | 9SV-250/5T | - | 9SV/A-250/5T-306 | 9SV/I-250/5T-114 | 9SV/I-250/5T-306 | | | 57,1 | 49,5 | 47,2 | 44,3 | 40,6 | 38,4 | 35,8 | 30,2 | 24,4 |
| | | 9SL-250/5 | 9SL-250/5T | - | 9SL/A-250/5T-306 | 9SL/I-250/5T-114 | 9SL/I-250/5T-306 | | | | | | | | | | | |
| | 4 | 9V-300/6 | 9V-300/6T | - | 9V/A-300/6T-306 | 9V/I-300/6T-114 | 9V/I-300/6T-306 | 3 | 2,2 | 69,8 | 60,3 | 57,5 | 53,6 | 48,8 | 46,0 | 42,9 | 36,4 | 29,6 |
| | | 9L-300/6 | 9L-300/6T | - | 9L/A-300/6T-306 | 9L/I-300/6T-114 | 9L/I-300/6T-306 | | | | | | | | | | | |
| | | 9SV-300/6 | 9SV-300/6T | - | 9SV/A-300/6T-306 | 9SV/I-300/6T-114 | 9SV/I-300/6T-306 | | | 69,4 | 60,3 | 57,3 | 54,0 | 49,8 | 46,9 | 43,6 | 36,2 | 28,1 |
| | | 9SL-300/6 | 9SL-300/6T | - | 9SL/A-300/6T-306 | 9SL/I-300/6T-114 | 9SL/I-300/6T-306 | | | | | | | | | | | |
| | 5,5 | - | 9V-400/7T | - | 9V/A-400/7T-309 | - | 9V/I-400/7T-309 | 4 | 3 | 83,3 | 72,7 | 68,9 | 64,2 | 58,5 | 55,2 | 51,6 | 43,6 | 34,7 |
| | | - | 9L-400/7T | - | 9L/A-400/7T-309 | - | 9L/I-400/7T-309 | | | | | | | | | | | |
| | | - | 9SV-400/7T | - | 9SV/A-400/7T-309 | - | 9SV/I-400/7T-309 | | | 82,0 | 72,0 | 68,7 | 64,9 | 59,9 | 56,6 | 52,9 | 44,2 | 33,9 |
| | | - | 9SL-400/7T | - | 9SL/A-400/7T-309 | - | 9SL/I-400/7T-309 | | | | | | | | | | | |
| | 6,5 | - | 9V-450/8T | - | 9V/A-450/8T-309 | - | 9V/I-450/8T-309 | 4,5 | 3,37 | 96,7 | 84,8 | 80,6 | 75,5 | 69,2 | 65,4 | 61,3 | 52,2 | 42,1 |
| | | - | 9L-450/8T | - | 9L/A-450/8T-309 | - | 9L/I-450/8T-309 | | | | | | | | | | | |
| | | - | 9SV-450/8T | - | 9SV/A-450/8T-309 | - | 9SV/I-450/8T-309 | | | 93,5 | 82,6 | 79,0 | 74,9 | 69,5 | 65,8 | 61,5 | 52,0 | 41,7 |
| | | - | 9SL-450/8T | - | 9SL/A-450/8T-309 | - | 9SL/I-450/8T-309 | | | | | | | | | | | |
| | 7 | - | 9V-500/9T | - | 9V/A-500/9T-309 | - | 9V/I-500/9T-309 | 4,5 | 3,37 | 107,1 | 92,8 | 88,3 | 82,4 | 75,2 | 71,0 | 66,4 | 56,4 | 45,2 |
| | | - | 9L-500/9T | - | 9L/A-500/9T-309 | - | 9L/I-500/9T-309 | | | | | | | | | | | |
| | | - | 9SV-500/9T | - | 9SV/A-500/9T-309 | - | 9SV/I-500/9T-309 | | | 105,4 | 92,5 | 88,3 | 83,5 | 77,3 | 73,0 | 68,1 | 57,5 | 46,9 |
| | | - | 9SL-500/9T | - | 9SL/A-500/9T-309 | - | 9SL/I-500/9T-309 | | | | | | | | | | | |
| | 8 | - | 9V-550/10T | - | 9V/A-550/10T-309 | - | 9V/I-550/10T-309 | 5,5 | 4 | 119,5 | 104,3 | 99,3 | 92,7 | 84,6 | 79,9 | 74,8 | 63,5 | 51,2 |
| | | - | 9L-550/10T | - | 9L/A-550/10T-309 | - | 9L/I-550/10T-309 | | | | | | | | | | | |
| | | - | 9SV-550/10T | - | - | - | 9SV/I-550/10T-311 | | | 117,6 | 104,5 | 99,9 | 94,7 | 87,8 | 83,2 | 77,9 | 66,2 | 53,4 |
| | | - | 9SL-550/10T | - | - | - | 9SL/I-550/10T-311 | | | | | | | | | | | |
| | 10 | - | 9SLG-750/12T | - | - | - | 9SLG/I-750/12T-314 | 7,5 | 5,5 | 141,3 | 125,4 | 119,7 | 113,4 | 105,1 | 99,7 | 93,7 | 79,6 | |
| | 12 | - | 9SLG-800/14T | - | - | - | 9SLG/I-800/14T-314 | 7,5 | 5,5 | 165,5 | 146,5 | 139,9 | 132,7 | 123,4 | 117,3 | 110,3 | 94,0 | |
| | 13 | - | 9SLG-900/16T | - | - | - | 9SLG/I-900/16T-318 | 10 | 7,5 | 188,7 | 167,1 | 159,7 | 151,4 | 140,4 | 133,3 | 125,1 | 106,2 | |
| | 15 | - | 9SLG-950/9T | - | - | - | 9SLG/I-950/9T-318 | 10 | 7,5 | 213,8 | 189,6 | 181,2 | 172,0 | 159,9 | 151,8 | 142,5 | 121,0 | |
| | 17 | - | 9SLG-1000/20T | - | - | - | 9SLG/I-1000/20T-318 | 10 | 7,5 | 236,7 | 209,3 | 199,8 | 189,5 | 176,1 | 167,3 | 157,5 | 134,5 | |

| TARGET | | TYPE - 50 Hz | | | | P2 | | 2U - Q (m³/h - l/min) | | | | | | | | | | | | |
|---|---|---|---|---|---|---|---|---|---|---|---|---|---|---|---|---|---|---|---|---|
| | | VERTICAL PUMPS | | | | 2U (×2) 3U (×3) | | 0 | 12 | 14,4 | 16,8 | 19,2 | 20,4 | 21,6 | 24 | 28,8 | 33,6 | 38,4 | 43,2 | 48 |
| | | | | | | | | 0 | 200 | 240 | 280 | 320 | 340 | 360 | 400 | 480 | 560 | 640 | 720 | 800 |
| | | FIXED SPEED | VARIABLE SPEED | | | | | 3U - Q (m³/h - l/min) | | | | | | | | | | | | |
| | | 2U/3U | 2U/3U EPIC-A | 2U/3U IPFC | | | | 0 | 18 | 21,6 | 25,2 | 28,8 | 30,6 | 32,4 | 36 | 43,2 | 50,4 | 57,6 | 64,8 | 72 |
| | | | | | | | | 0 | 300 | 360 | 420 | 480 | 510 | 540 | 600 | 720 | 840 | 960 | 1080 | 1200 |
| m³/h | bar | 3~ 400V | 3~ 400V-in 3~ 400V-out | 1~ 230V-in 3~ 230V-out | 3~ 400V-in 3~ 400V-out | HP | kW | H (m) | | | | | | | | | | | | |
| (2U) 36 (3U) 54 | 2 | 18V-250/3T | 18V/A-250/3T-306 | 18V/I-250/3T-114 | 18V/I-250/3T-306 | 2,5 | 1,85 | 34,7 | 32,9 | 32,6 | 32,2 | 31,6 | 31,3 | 31,0 | 30,1 | 28,0 | 24,7 | 20,6 | 15,9 | 10,7 |
| | | 18L-250/3T | 18L/A-250/3T-306 | 18L/I-250/3T-114 | 18L/I-250/3T-306 | | | | | | | | | | | | | | | |
| | | 18SV-250/3T | 18SV/A-250/3T-306 | 18SV/I-250/3T-114 | 18SV/I-250/3T-306 | | | 33,8 | 31,6 | 31,0 | 30,2 | 29,4 | 28,9 | 28,4 | 27,4 | 25,4 | 23,2 | 20,4 | 16,3 | 11,5 |
| | | 18SL-250/3T | 18SL/A-250/3T-306 | 18SL/I-250/3T-114 | 18SL/I-250/3T-306 | | | | | | | | | | | | | | | |
| | 2,5 | 18HX-300/3T | - | 18HX/I-300/3T-114 | 18HX/I-300/3T-306 | 3 | 2,2 | 41,2 | | | 37,1 | 36,3 | 35,9 | 35,5 | 34,4 | 32,3 | 28,9 | 24,8 | 19,4 | 13,5 |
| | 3 | 18V-400/4T | 18V/A-400/4T-309 | - | 18V/I-400/4T-309 | 4 | 3 | 47,1 | 45,4 | 45,2 | 44,9 | 44,3 | 44,0 | 43,6 | 42,6 | 40,0 | 36,0 | 30,6 | 24,6 | 17,8 |
| | | 18L-400/4T | 18L/A-400/4T-309 | - | 18L/I-400/4T-309 | | | | | | | | | | | | | | | |
| | | 18SV-400/4T | 18SV/A-400/4T-309 | - | 18SV/I-400/4T-309 | | | 46,3 | 44,2 | 43,4 | 42,5 | 41,4 | 40,9 | 40,3 | 39,1 | 36,7 | 34,1 | 30,8 | 25,6 | 19,0 |
| | | 18SL-400/4T | 18SL/A-400/4T-309 | - | 18SL/I-400/4T-309 | | | | | | | | | | | | | | | |
| | 3,5 | 18HX-400/4T | - | 18HX/I-400/4T-114 | 18HX/I-400/4T-306 | 4 | 3 | 55,1 | | | 49,9 | 48,8 | 48,3 | 47,7 | 46,3 | 43,5 | 39,1 | 33,5 | 26,4 | 18,5 |
| | 4 | 18V-450/5T | 18V/A-450/5T-309 | - | 18V/I-450/5T-309 | 4,5 | 3,37 | 59,2 | 57,6 | 57,4 | 57,0 | 56,4 | 56,0 | 55,6 | 54,5 | 51,6 | 46,7 | 40,1 | 33,3 | 25,3 |
| | | 18L-450/5T | 18L/A-450/5T-309 | - | 18L/I-450/5T-309 | | | | | | | | | | | | | | | |
| | | 18SV-450/5T | 18SV/A-450/5T-309 | - | 18SV/I-450/5T-309 | | | 58,1 | 55,7 | 54,6 | 53,4 | 52,1 | 51,4 | 50,7 | 49,3 | 46,3 | 42,9 | 38,7 | 32,2 | 24,0 |
| | | 18SL-450/5T | 18SL/A-450/5T-309 | - | 18SL/I-450/5T-309 | | | | | | | | | | | | | | | |
| | 4,5 | 18HX-550/5T | - | - | 18HX/I-550/5T-309 | 5,5 | 4 | 72,3 | | | 64,3 | 63,1 | 62,4 | 61,7 | 60,1 | 56,6 | 51,8 | 45,1 | 36,8 | 27,6 |

# PERFORMANCE 2U/3U VERTICAL

| TARGET | | TYPE - 50 Hz | | | P2 | | 2U - Q (m³/h - l/min) | | | | | | | | | | | | | |
|---|---|---|---|---|---|---|---|---|---|---|---|---|---|---|---|---|---|---|---|---|
| | | VERTICAL PUMPS | | | 2U (×2) 3U (×3) | | 0 | 12 | 14,4 | 16,8 | 19,2 | 20,4 | 21,6 | 24 | 28,8 | 33,6 | 38,4 | 43,2 | 48 | 56 |
| | | | | | | | 0 | 200 | 240 | 280 | 320 | 340 | 360 | 400 | 480 | 560 | 640 | 720 | 800 | 933 |
| | | FIXED SPEED | VARIABLE SPEED | | | | 3U - Q (m³/h - l/min) | | | | | | | | | | | | | |
| | | 2U/3U | 2U/3U IPFC | | | | 0 | 18 | 21,6 | 25,2 | 28,8 | 30,6 | 32,4 | 36 | 43,2 | 50,4 | 57,6 | 64,8 | 72 | 84 |
| | | | | | | | 0 | 300 | 360 | 420 | 480 | 510 | 540 | 600 | 720 | 840 | 960 | 1080 | 1200 | 1400 |
| m³/h | bar | 3~ 400V | 1~ 230V-in 3~ 230V-out | 3~ 400V-in 3~ 400V-out | HP | kW | H (m) | | | | | | | | | | | | | |
| (2U) 36 (3U) 54 | 5 | **18V-550/6T** | - | **18V/I-550/6T-311** | 5,5 | 4 | 71,4 | 69,7 | 69,6 | 69,0 | 68,2 | 67,7 | 67,1 | 65,7 | 62,2 | 56,3 | 48,0 | 39,4 | 29,4 | |
| | | **18L-550/6T** | - | **18L/I-550/6T-311** | | | | | | | | | | | | | | | | |
| | | **18SV-550/6T** | - | **18SV/I-550/6T-311** | | | 70,1 | 67,4 | 66,3 | 64,9 | 63,4 | 62,6 | 61,7 | 60,0 | 56,4 | 52,4 | 47,6 | 39,6 | 29,9 | |
| | | **18SL-550/6T** | - | **18SL/I-550/6T-311** | | | | | | | | | | | | | | | | |
| | 6 | **18HX-750/6T** | - | **18HX/I-750/6T-311** | 7,5 | 5,5 | 88,0 | | | 79,6 | 78,2 | 77,4 | 76,7 | 74,9 | 71,0 | 66,0 | 58,3 | 48,8 | 37,5 | |
| | 6,5 | **18V-750/8T** | - | **18V/I-750/8T-314** | 7,5 | 5,5 | 96,1 | 94,2 | 94,1 | 93,5 | 92,4 | 91,7 | 90,9 | 89,1 | 84,5 | 77,0 | 66,1 | 54,2 | 41,1 | |
| | | **18L-750/8T** | - | **18L/I-750/8T-314** | | | | | | | | | | | | | | | | |
| | | **18SV-750/8T** | - | **18SV/I-750/8T-314** | | | 94,2 | 90,6 | 89,1 | 87,3 | 85,3 | 84,2 | 83,1 | 80,9 | 76,2 | 71,1 | 65,0 | 54,6 | 41,4 | |
| | | **18SL-750/8T** | - | **18SL/I-750/8T-314** | | | | | | | | | | | | | | | | |
| | 7 | **18HX-750/7T** | - | **18HX/I-750/7T-311** | 7,5 | 5,5 | 102,5 | | | 92,4 | 90,7 | 89,8 | 88,9 | 86,8 | 82,3 | 76,2 | 67,3 | 56,1 | 43,0 | |
| | 7,5 | **18V-900/9T** | - | **18V/I-900/9T-318** | 10 | 7,5 | 108,5 | 106,9 | 107,0 | 106,4 | 105,3 | 104,5 | 103,7 | 101,7 | 96,8 | 88,6 | 75,9 | 62,6 | 47,8 | |
| | | **18L-900/9T** | - | **18L/I-900/9T-318** | | | | | | | | | | | | | | | | |
| | | **18SV-900/9T** | - | **18SV/I-900/9T-318** | | | 106,4 | 102,8 | 101,3 | 99,3 | 97,2 | 96,1 | 94,9 | 92,4 | 87,3 | 81,6 | 75,0 | 63,5 | 48,5 | |
| | | **18SL-900/9T** | - | **18SL/I-900/9T-318** | | | | | | | | | | | | | | | | |
| | 8 | **18HX-1000/8T** | - | **18HX/I-1000/8T-314** | 10 | 7,5 | 117,0 | | | 105,2 | 103,2 | 102,3 | 101,2 | 98,8 | 93,5 | 86,5 | 76,2 | 63,5 | 48,5 | |
| | 9 | **18HX-1000/9T** | - | **18HX/I-1000/9T-314** | 10 | 7,5 | 131,2 | | | 117,8 | 115,5 | 114,4 | 113,1 | 110,4 | 104,5 | 96,5 | 84,9 | 70,5 | 53,6 | |
| | 9,5 | **18LG-920/10T** | - | **18LG/I-920/10T-318** | 10 | 7,5 | 120,4 | 116,8 | 118,3 | 118,0 | 116,6 | 115,9 | 115,0 | 112,6 | 104,4 | 96,3 | 85,8 | 67,8 | | |
| | 10 | **18LG-1000/11T** | - | **18LG/I-1000/11T-318** | 10 | 7,5 | 132,4 | 128,9 | 130,0 | 129,6 | 128,0 | 127,1 | 125,9 | 123,0 | 115,0 | 103,9 | 93,0 | 72,6 | | |
| (2U) 44 (3U) 66 | 3 | **22HX-400/3T** | **22HX/I-400/3T-114** | **22HX/I-400/3T-306** | 4 | 3 | 45,0 | | | | | 40,8 | 40,5 | 39,9 | 38,3 | 36,6 | 34,2 | 30,5 | 25,8 | 16,6 |
| | 4 | **22HX-550/4T** | - | **22HX/I-550/4T-309** | 5,5 | 4 | 62,2 | | | | | 55,5 | 55,1 | 54,2 | 52,4 | 50,2 | 47,3 | 42,7 | 36,8 | 25,2 |
| | 5 | **22HX-750/5T** | - | **22HX/I-750/5T-311** | 7,5 | 5,5 | 78,6 | | | | | 70,6 | 70,1 | 69,0 | 67,0 | 64,2 | 60,8 | 55,3 | 47,9 | 33,5 |
| | 6,5 | **22HX-1000/6T** | - | **22HX/I-1000/6T-314** | 10 | 7,5 | 94,2 | | | | | 86,0 | 85,3 | 84,1 | 81,7 | 79,2 | 76,8 | 63,6 | 52,8 | 42,0 |
| | 7,5 | **22HX-1000/7T** | - | **22HX/I-1000/7T-318** | 10 | 7,5 | 109,5 | | | | | 99,6 | 98,8 | 97,4 | 94,6 | 91,2 | 86,3 | 78,4 | 68,2 | 47,9 |

| TARGET | | TYPE - 50 Hz | | | P2 | | 2U - Q (m³/h - l/min) | | | | | | | | | | | | | |
|---|---|---|---|---|---|---|---|---|---|---|---|---|---|---|---|---|---|---|---|---|
| | | VERTICAL PUMPS | | | 2U (×2) 3U (×3) | | 0 | 50 | 60 | 68 | 84 | 90 | 100 | 120 | 128 | 140 | 160 | 176 | 200 | 230 |
| | | | | | | | 0 | 833 | 1000 | 1133 | 1400 | 1500 | 1667 | 2000 | 2133 | 2333 | 2667 | 2933 | 3333 | 3833 |
| | | FIXED SPEED | VARIABLE SPEED | | | | 3U - Q (m³/h - l/min) | | | | | | | | | | | | | |
| | | 2U/3U | 2U/3U IPFC | | | | 0 | 75 | 90 | 102 | 126 | 135 | 150 | 180 | 192 | 210 | 240 | 264 | 300 | 345 |
| | | | | | | | 0 | 1250 | 1500 | 1700 | 2100 | 2250 | 2500 | 3000 | 3200 | 3500 | 4000 | 4400 | 5000 | 5750 |
| m³/h | bar | 3~ 400V | 3~ 400V-in 3~ 400V-out | | HP | kW | H (m) | | | | | | | | | | | | | |
| (2U) 70 (3U) 105 | 3 | **35HS-750/2T** | **35HS/I-750/2T-311** | | 7,5 | 5,5 | 48,5 | 39,6 | 36,9 | 34,4 | 27,2 | | | | | | | | | |
| | 4,5 | **35HS-1000/3T** | **35HS/I-1000/3T-314** | | 10 | 7,5 | 72,2 | 58,2 | 54,2 | 50,3 | 39,5 | | | | | | | | | |
| | 5 | **35HS-1000/4-2RT** | **35HS/I-1000/4-2RT-318** | | 10 | 7,5 | 85,1 | 68,6 | 63,9 | 58,4 | 44,7 | | | | | | | | | |
| | 6 | **35HS-1500/4-1RT** | **35HS/I-1500/4-1RT-318** | | 15 | 11 | 92,8 | 75,3 | 70,2 | 65,2 | 50,8 | | | | | | | | | |
| | 7 | **35HS-1500/4T** | **35HS/I-1500/4T-325** | | 15 | 11 | 99,4 | 81,0 | 76,3 | 71,8 | 58,5 | | | | | | | | | |
| | 8,5 | **35HS-2000/5T** | **35HS/I-2000/5T-325** | | 20 | 15 | 121,1 | 99,3 | 93,1 | 87,4 | 70,0 | | | | | | | | | |
| | 10 | **35HS-2000/6T** | **35HS/I-2000/6T-330** | | 20 | 15 | 145,6 | 119,3 | 111,9 | 105,0 | 84,2 | | | | | | | | | |
| | 11 | **35HS-2000/7-1RT** | **35HS/I-2000/7-1RT-330** | | 20 | 15 | 163,3 | 132,3 | 123,2 | 114,0 | 89,1 | | | | | | | | | |
| (2U) 100 (3U) 150 | 3 | **50HS-1000/2T** | **50HS/I-1000/2T-318** | | 10 | 7,5 | 49,0 | | | 42,0 | 38,8 | 37,2 | 34,3 | 27,5 | 24,1 | | | | | |
| | 5 | **50HS-1500/3T** | **50HS/I-1500/3T-325** | | 15 | 11 | 74,2 | | | 65,0 | 60,9 | 58,8 | 54,8 | 45,5 | 41,0 | | | | | |
| | 7 | **50HS-2000/4T** | **50HS/I-2000/4T-330** | | 20 | 15 | 97,5 | | | 86,4 | 81,3 | 78,5 | 73,2 | 60,8 | 54,7 | | | | | |
| | 9 | **50HS-2500/5T** | - | | 25 | 18,5 | 122,3 | | | 109,1 | 102,9 | 99,5 | 92,9 | 77,5 | 70,0 | | | | | |
| | 11 | **50HS-3000/6T** | - | | 30 | 22 | 146,0 | | | 129,8 | 122,2 | 118,0 | 110,0 | 91,6 | 82,5 | | | | | |
| (2U) 150 (3U) 225 | 3,5 | **75HS-1500/2T** | **75HS/I-1500/2T-325** | | 15 | 11 | 59,3 | | 51,2 | 49,9 | 47,5 | 46,8 | 45,5 | 43,2 | 42,0 | 39,9 | 35,3 | 30,8 | | |
| | 6 | **75HS-2500/3T** | - | | 25 | 18,5 | 89,6 | | 77,6 | 75,6 | 72,0 | 70,9 | 69,0 | 65,7 | 63,9 | 60,7 | 53,9 | 47,2 | | |
| | 8 | **75HS-3000/4T** | - | | 30 | 22 | 111,8 | | 100,8 | 99,2 | 95,8 | 94,5 | 92,4 | 88,4 | 86,3 | 82,3 | 73,3 | 62,9 | | |
| | 10 | **75HS-4000/5T** | - | | 40 | 30 | 142,4 | | 129,2 | 127,1 | 123,0 | 121,5 | 119,0 | 114,1 | 111,5 | 106,9 | 96,3 | 84,6 | | |
| | 11 | **75HS-4000/6-2RT** | - | | 40 | 30 | 153,5 | | 141,6 | 139,5 | 135,1 | 133,3 | 130,3 | 123,4 | 119,6 | 112,9 | 99,0 | 84,1 | | |
| (2U) 180 (3U) 270 | 2,5 | **90HS-1500/2-2RT** | **90HS/I-1500/2-2RT-325** | | 15 | 11 | 49,6 | | | | | 42,4 | 41,3 | 39,0 | 38,1 | 36,6 | 33,2 | 29,4 | 22,7 | 11,7 |
| | 4 | **90HS-2000/2T** | **90HS/I-2000/2T-330** | | 20 | 15 | 69,2 | | | | | 56,6 | 54,5 | 50,5 | 49,2 | 47,3 | 44,3 | 41,6 | 36,3 | 27,3 |
| | 6,5 | **90HS-3000/3T** | - | | 30 | 22 | 92,4 | | | | | 82,6 | 80,6 | 76,7 | 75,3 | 73,2 | 69,4 | 65,5 | 57,8 | 45,2 |
| | 9 | **90HS-4000/4T** | - | | 40 | 30 | 125,6 | | | | | 113,0 | 110,4 | 105,2 | 103,3 | 100,6 | 95,7 | 90,7 | 80,8 | 64,4 |
| | 11 | **90HS-5000/5T** | - | | 50 | 37 | 156,6 | | | | | 140,7 | 137,4 | 130,9 | 128,6 | 125,2 | 119,1 | 112,8 | 100,3 | 79,8 |

# DRAINAGE AND SEWAGE

# DRAINAGE AND SEWAGE PUMPS

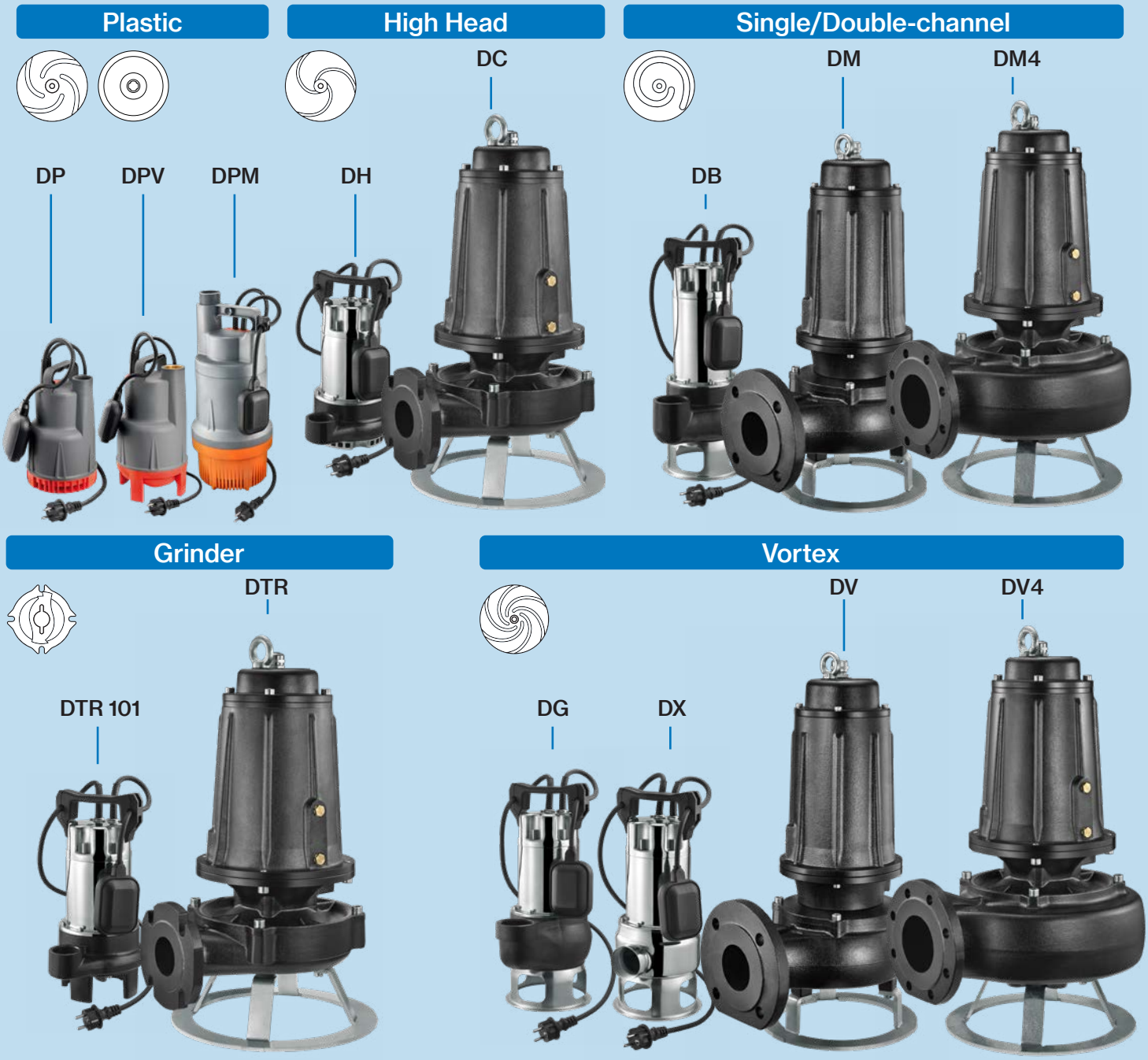


Different models available in relation to performance requirements: centrifugal, Vortex, single or double channels pumps suitable for clean water, sewage and slurry. Impeller with grinding system available.

**Applications:**

- Emptying of cisterns
- Fountains
- Swimming pools
- Draining of liquids from collection tanks and sumps

# DRAINAGE AND SEWAGE PUMPS

## Drainage

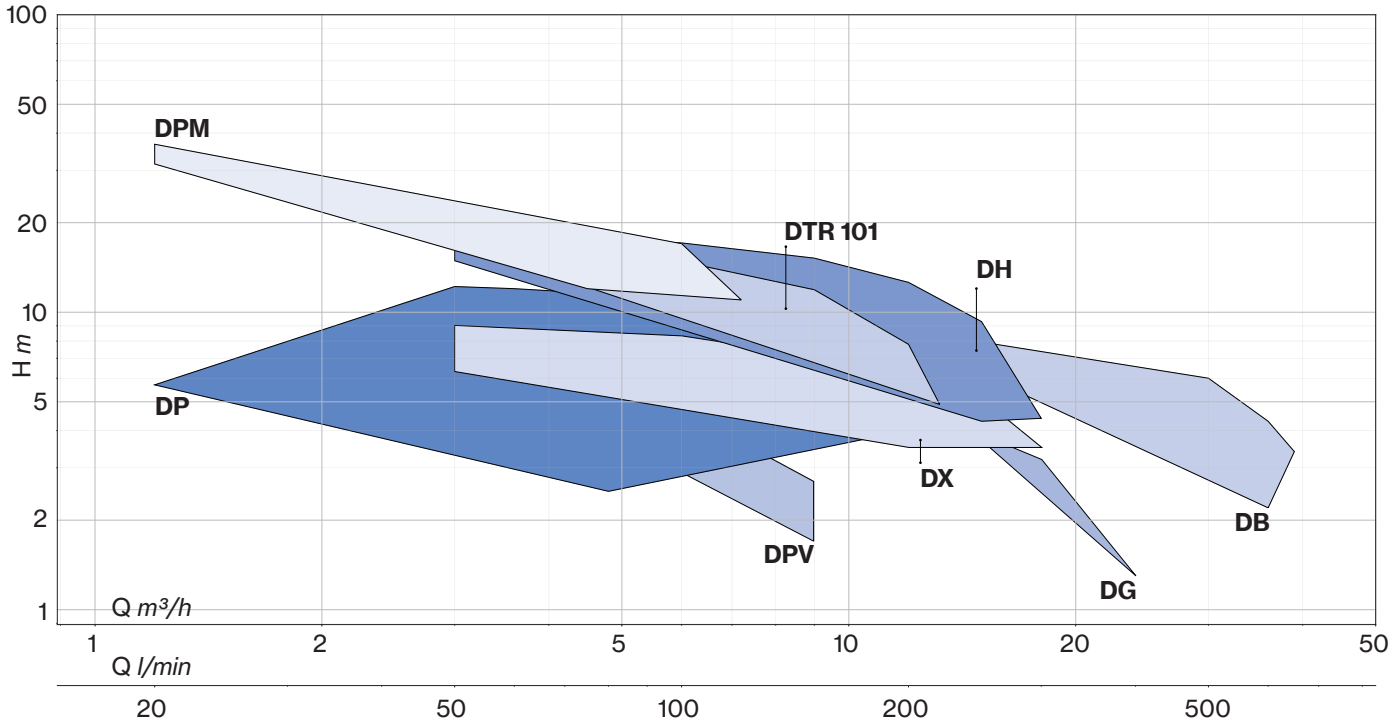


## Sewage

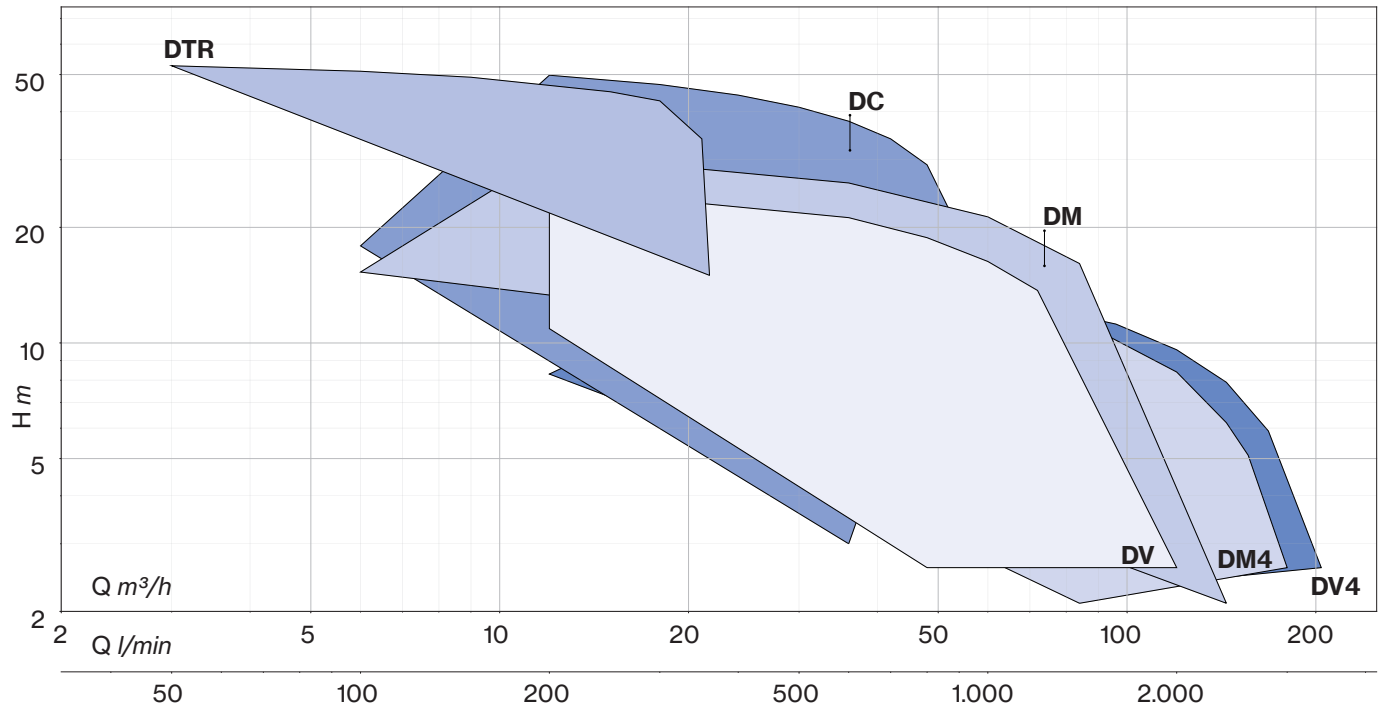

# DP/DPV

Drainage pumps for emptying pits and cisterns, for gardening; completely constructed in anticorrosive material. Brass insert on the delivery opening (DP 80/100 - DPV 80/100). The single-phase version includes a built-in capacitor, a thermal protector and it can be equipped with a float switch.

DP 40
DP 80
DPV 80

DP 60
DP 100
DPV 100

White water

## Construction features

| | |
|---|---|
| **Pump body** | polypropylene |
| **Impeller** | Noryl® |
| **Mechanical seal** | double lip seal on ceramic bush |
| **Motor shaft** | stainless steel AISI 416 with ceramic bush |
| **Free passage** | Ø max 4 mm (DP 40/60)<br>Ø max 7 mm (DP 80/100)<br>Ø max 15 mm (DPV 80/100) |
| **Max submergence** | 5 m |
| **Liquid temperature** | 0 - 40 °C |
| **Cable** | H05 RN8F, 10 m (DP 40/60)<br>H07 RN8F, 10 m (DP 80/100, DPV 80/100) |
| **G** | float switch |

## Motor

| | |
|---|---|
| **2 poles induction motor** | 3~ 400V - 50Hz (DPV 80/100)<br>1~ 230V - 50Hz (with thermal protection) |
| **Insulation class** | F |
| **Protection degree** | IPX8 |

| LOTS | | | | |
|---|---|---|---|---|
| TYPE | TRUCK | | CONTAINER | |
| | PALLET (cm) | N° pumps | PALLET (cm) | N° pumps |
| **DP 40-60** | 80×120×175 | 135 | 80×120×205 | 162 |
| **DP(T) 80÷100** | 80×120×145 | 57 | 80×120×190 | 76 |
| **DPV(T) 80÷100** | 80×120×145 | 57 | 80×120×190 | 76 |

**DPV** [ ] **80 G**

- [ ] without float switch
- **G** with float switch

motor [ ] 1~ **T** 3~

pump type

**DP**

**DPV**

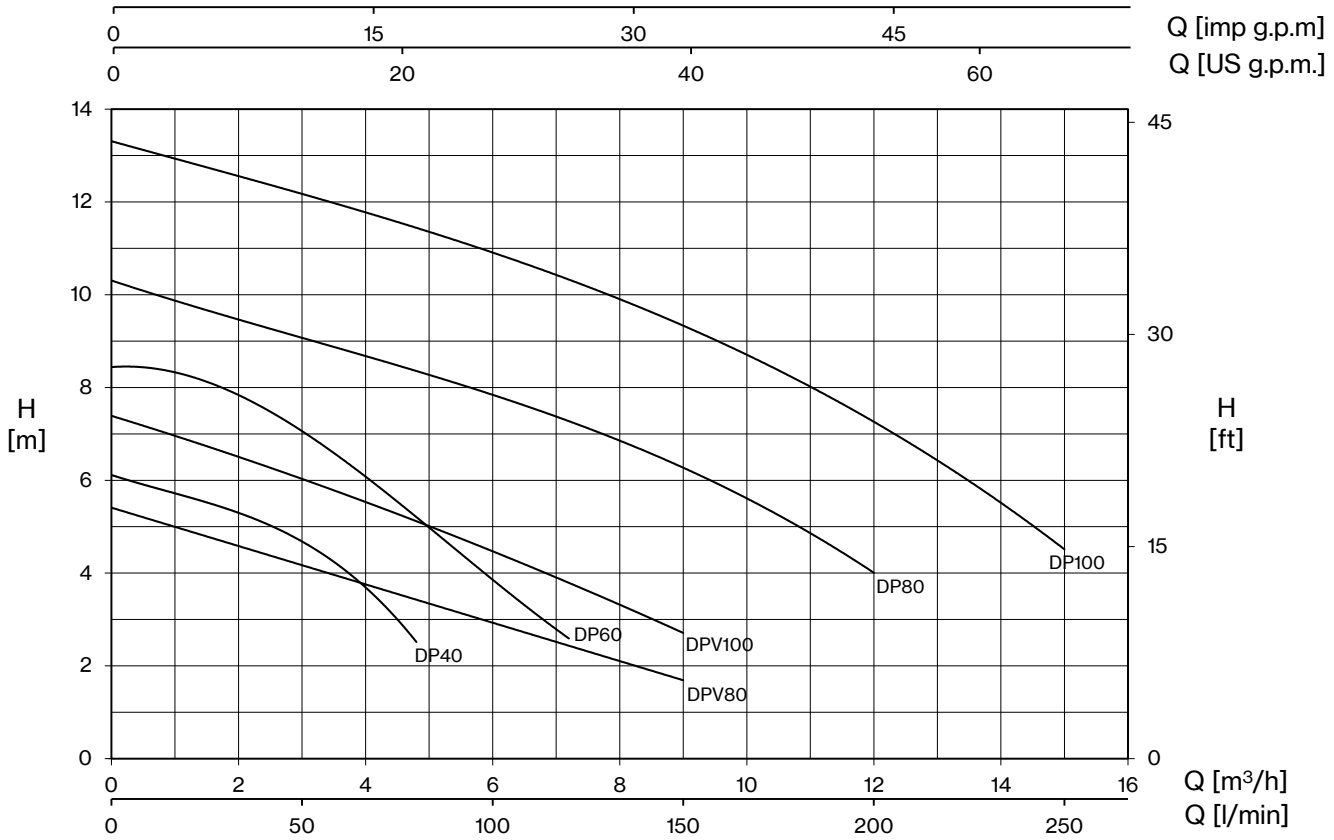


| TYPE - 50 Hz | | P1 | CURRENT | | Q (m³/h - l/min) | | | | | | | | | | |
|---|---|---|---|---|---|---|---|---|---|---|---|---|---|---|---|
| 1~ | 3~ | | 1~ 230V | 3~ 400V | 0 | 1,2 | 2,4 | 3 | 3,6 | 4,8 | 6 | 7,2 | 9 | 12 | 15 |
| | | | | | 0 | 20 | 40 | 50 | 60 | 80 | 100 | 120 | 150 | 200 | 250 |
| | | kW | A | | H (m) | | | | | | | | | | |
| **DP 40 (G)** | **-** | 0,2 | 1,0 | - | 6,1 | 5,7 | 5,0 | 4,7 | 4,2 | 2,5 | | | | | |
| **DP 60 (G)** | **-** | 0,4 | 2,1 | - | 8,5 | 8,1 | 7,6 | 7,2 | 6,7 | 5,0 | 3,9 | 2,6 | | | |
| **DP 80 (G)** | **DPT 80** | 0,8 | 3,7 | 1,8 | 10,3 | | | 9,1 | 8,8 | 8,3 | 7,8 | 7,3 | 6,3 | 4,0 | |
| **DP 100 (G)** | **DPT 100** | 1,05 | 5,1 | 2,3 | 13,3 | | | 12,2 | 12,0 | 11,5 | 10,9 | 10,3 | 9,3 | 7,3 | 4,5 |

| TYPE - 50 Hz | | P1 | CURRENT | | Q (m³/h - l/min) | | | |
|---|---|---|---|---|---|---|---|---|
| 1~ | 3~ | | 1~ 230V | 3~ 400V | 0 | 3 | 6 | 9 |
| | | | | | 0 | 50 | 100 | 150 |
| | | kW | A | | H (m) | | | |
| **DPV 80 (G)** | **DPVT 80** | 0,5 | 2,6 | 1,2 | 5,4 | 4,2 | 2,9 | 1,7 |
| **DPV 100 (G)** | **DPVT 100** | 0,75 | 3,8 | 1,7 | 7,4 | 5,8 | 4,7 | 2,7 |

# DP/DPV

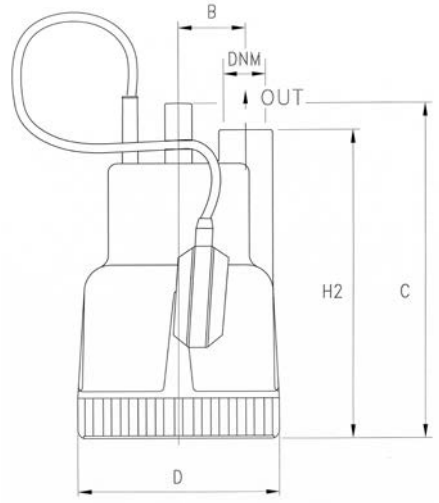


| TYPE | | DIMENSIONS (mm) | | | | | | | | Kg |
|---|---|---|---|---|---|---|---|---|---|---|
| 1~ | 3~ | B | C | D | H2 | DNM | I | L | M | |
| **DP 40 (G)** | **-** | 50 | 250 | 150 | 230 | 1" G | 170 | 200 | 320 | 5 |
| **DP 60 (G)** | **-** | 50 | 250 | 150 | 230 | | 170 | 200 | 320 | 6,5 |
| **DP 80 (G)** | **DPT 80** | 55,5 | 296 | 176 | 276 | 1" ¼ G | 185 | 230 | 310 | 8,5 |
| **DP 100 (G)** | **DPT 100** | 55,5 | 296 | 176 | 276 | | 185 | 230 | 310 | 10 |

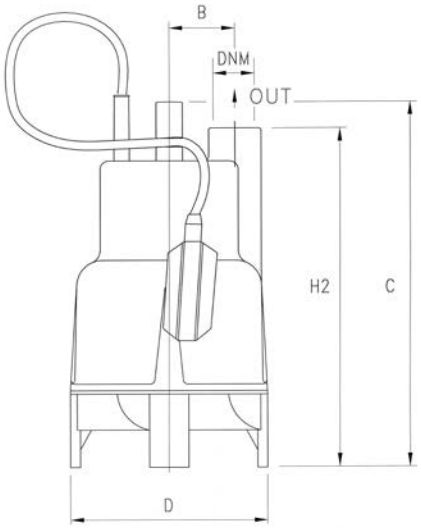


| TYPE | | DIMENSIONS (mm) | | | | | | | | Kg |
|---|---|---|---|---|---|---|---|---|---|---|
| 1~ | 3~ | B | C | D | H2 | DNM | I | L | M | |
| **DPV 80 (G)** | **DPVT 80** | 55,5 | 331 | 176 | 310 | 1" ¼ G | 185 | 230 | 345 | 8,5 |
| **DPV 100 (G)** | **DPVT 100** | 55,5 | 331 | 176 | 310 | | 185 | 230 | 345 | 10 |

# DPM

Multistage drainage pumps for clean water made of technopolymer, designed for pumping liquids from wells, tanks, and reservoirs, pressurising domestic systems, and irrigating gardens and vegetable plots.
The single-phase version includes a built-in capacitor and thermal protector, and can be equipped with a float switch. Suitable for installation with the Hidrotank flow controller. An expansion tank must be installed on the pump discharge line.

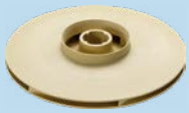

White water

## Construction features

| | |
|---|---|
| **Pump body** | technopolymer |
| **Impeller, diffusers** | Noryl® |
| **Shell, motor cover, base support** | Noryl® |
| **Mechanical seal** | double seal with oil barrier: silicon carbide on pump side, sealing ring on motor side |
| **Motor shaft** | stainless steel AISI 303 |
| **Max submergence** | 5 m |
| **Liquid temperature** | 0 - 35 °C |
| **Cable** | H07 RN8F, 10 m |
| **G** | float switch |

## Motor

| | |
|---|---|
| **2 poles induction motor** | 3~ 400V - 50Hz<br>1~ 230V - 50Hz<br>(with thermal protection) |
| **Insulation class** | F |
| **Protection degree** | IPX8 |

| LOTS | | | | |
|---|---|---|---|---|
| TYPE | TRUCK | | CONTAINER | |
| | PALLET (cm) | N° pumps | PALLET (cm) | N° pumps |
| **DPM(T)** | 85×110×160 | 48 | 85×110×200 | 64 |

**DPM** [ ] **5/3** **G**

- [ ] / **G** — without float switch / with float switch
- **5/3** — No. of impellers
- **5/3** — nominal flow-rate $m^3/h$
- [ ] — motor [ ] 1~ **T** 3~
- **DPM** — pump type

# DPM

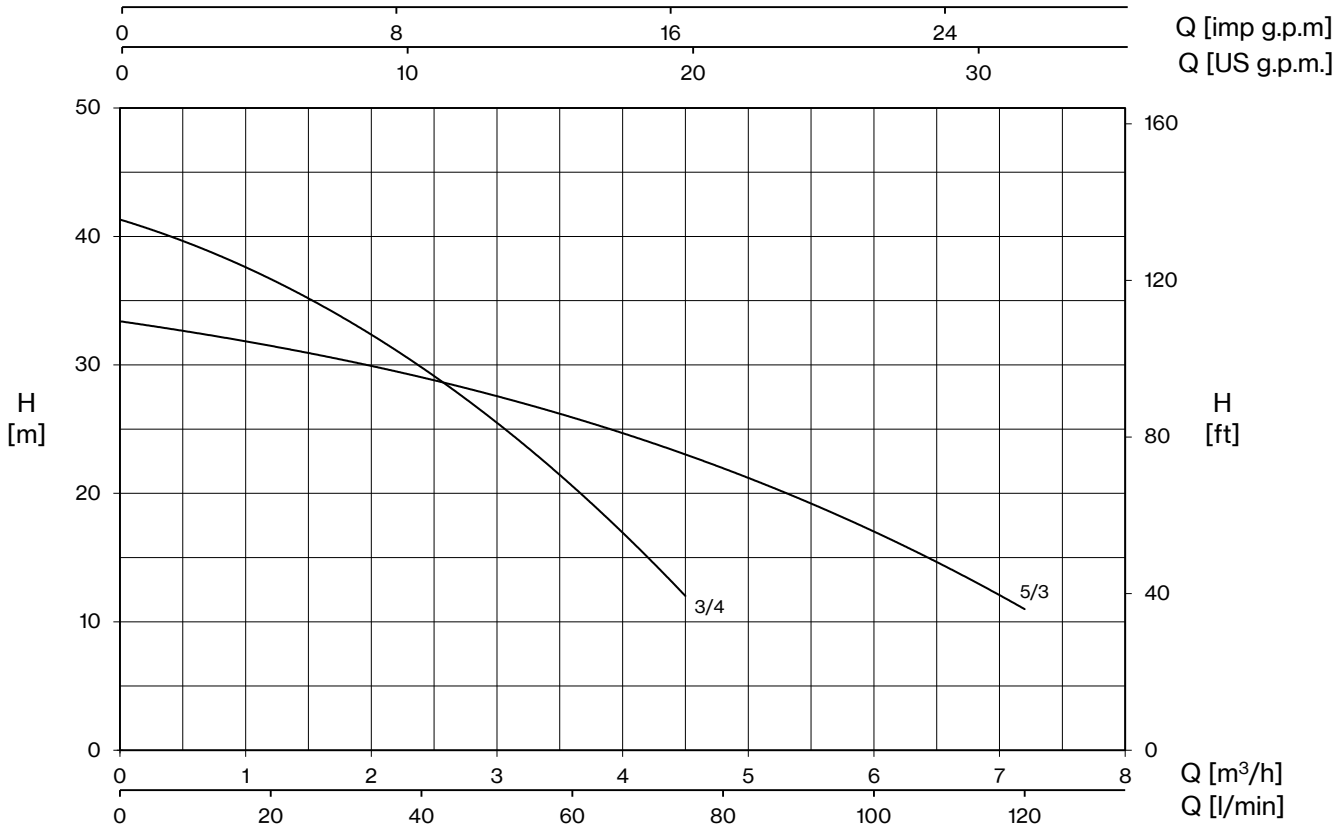


| TYPE - 50 Hz | | P1 | CURRENT | | Q (m³/h - l/min) | | | | | | | | |
|---|---|---|---|---|---|---|---|---|---|---|---|---|---|
| 1~ | 3~ | | 1~ 230V | 3~ 400V | 0 | 0,6 | 1,2 | 1,8 | 2,4 | 3,6 | 4,5 | 6 | 7,2 |
| | | | | | 0 | 10 | 20 | 30 | 40 | 60 | 75 | 100 | 120 |
| | | kW | A | | H (m) | | | | | | | | |
| **DPM 5/3 (G)** | **DPMT 5/3** | 0,9 | 3,9 | 1,7 | 33,4 | 32,5 | 31,5 | 30,3 | 29,0 | 26,0 | 23,0 | 17,0 | 11,0 |
| **DPM 3/4 (G)** | **DPMT 3/4** | 0,8 | 3,4 | 1,6 | 41,3 | 39,3 | 36,7 | 33,5 | 29,8 | 20,6 | 12,0 | | |

mt: minimum working level

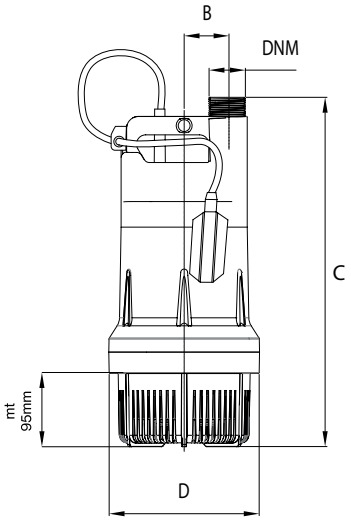


| TYPE | | DIMENSIONS (mm) | | | | | | | Kg |
|---|---|---|---|---|---|---|---|---|---|
| 1~ | 3~ | B | C | D | DNM | I | L | M | |
| **DPM 5/3 (G)** | **DPMT 5/3** | 56 | 454 | 196 | 1" ½ | 264 | 203 | 482 | 10 |
| **DPM 3/4 (G)** | **DPMT 3/4** | 56 | 454 | 196 | | 264 | 203 | 482 | 10,5 |

# DH

**Drainage**
High Head

Drainage pumps with open impeller for pumping liquids with suspended solids. Characterized by high head. The single-phase version includes a built-in capacitor, a thermal protector and it can be equipped with a float switch.

White water

## Construction features

| | |
|---|---|
| **Painting** | cataphoresis |
| **Pump body** | cast iron |
| **Shell, motor cover, base support** | stainless steel |
| **Impeller** | brass |
| **Mechanical seal** | double seal with oil barrier: silicon carbide on pump side, sealing ring on motor side |
| **Motor shaft** | stainless steel AISI 430 |
| **Free passage** | Ø max 10 mm |
| **Max submergence** | 5 m |
| **Liquid temperature** | 0 - 40 °C |
| **Cable** | H07 RN8F, 10 m |
| **G** | float switch |

## Motor

| | |
|---|---|
| **2 poles induction motor** | 3~ 400V - 50Hz<br>1~ 230V - 50Hz<br>(with thermal protection) |
| **Insulation class** | F |
| **Protection degree** | IPX8 |

| LOTS | | | | |
|---|---|---|---|---|
| TYPE | TRUCK | | CONTAINER | |
| | PALLET (cm) | N° pumps | PALLET (cm) | N° pumps |
| **DH(T)** | 80×120×125 | 57 | 80×120×165 | 76 |

**DH** ☐ **100 G**

- ☐ without float switch
- **G** with float switch
- motor ☐ 1~ **T** 3~
- pump type

# DH

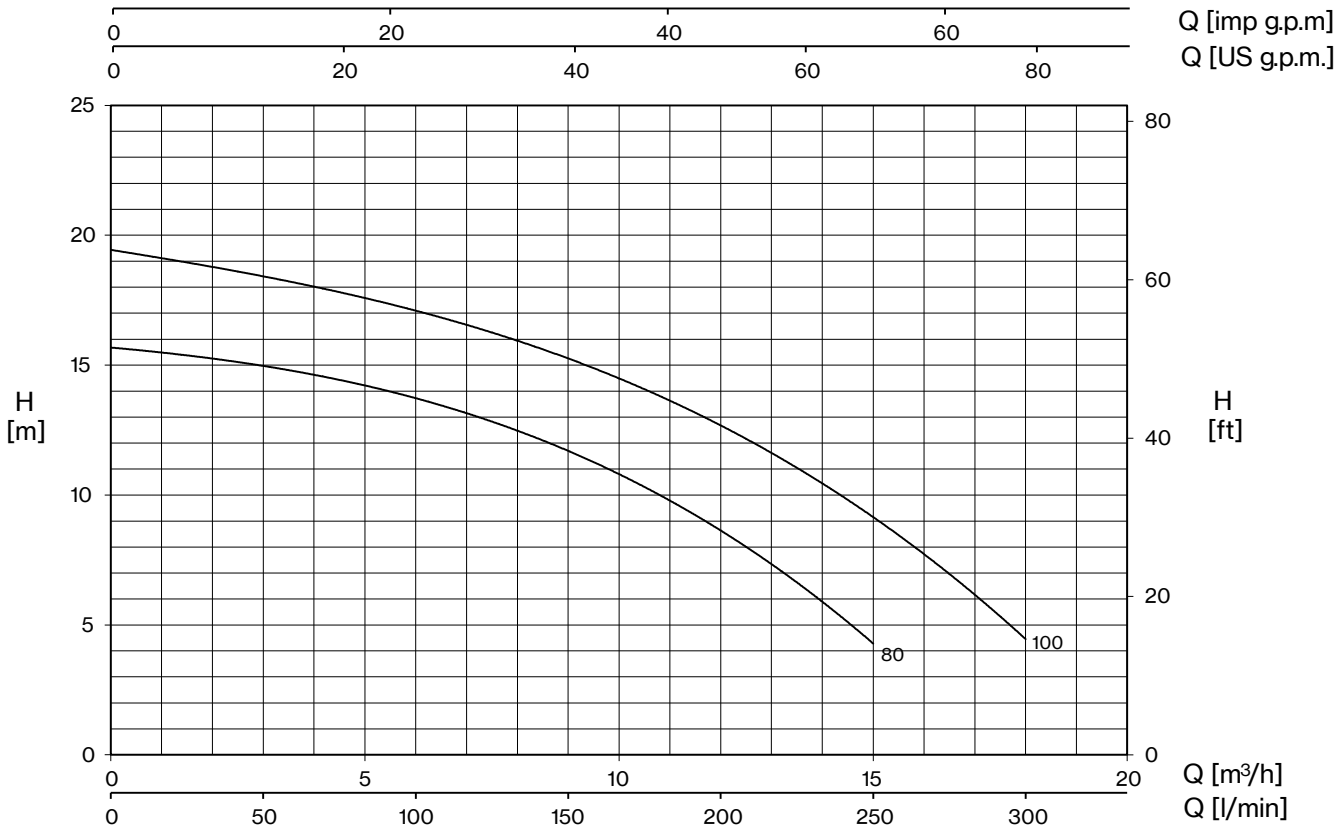


| TYPE - 50 Hz | | P1 | CURRENT | | Q (m³/h - l/min) | | | | | | |
|---|---|---|---|---|---|---|---|---|---|---|---|
| 1~ | 3~ | | 1~ 230V | 3~ 400V | 0 | 3 | 6 | 9 | 12 | 15 | 18 |
| | | | | | 0 | 50 | 100 | 150 | 200 | 250 | 300 |
| | | kW | A | | H (m) | | | | | | |
| **DH 80 (G)** | **DHT 80** | 0,98 | 4,3 | 2,1 | 15,7 | 14,9 | 13,8 | 11,7 | 8,6 | 4,3 | |
| **DH 100 (G)** | **DHT 100** | 1,37 | 6,2 | 2,8 | 19,4 | 18,5 | 17,1 | 15,2 | 12,6 | 9,3 | 4,4 |

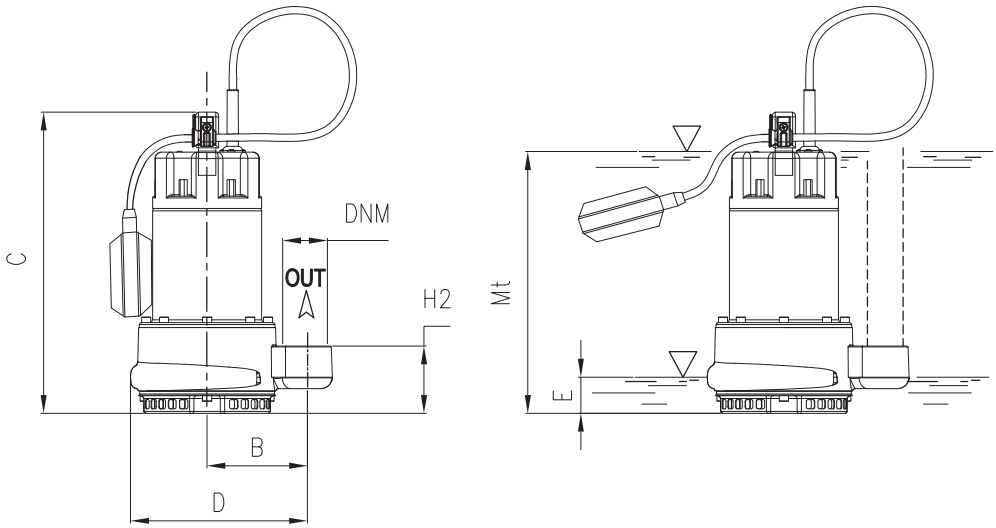


E: maximum emptying level
Mt: minimum liquid level for continuos duty

| TYPE | | DIMENSIONS (mm) | | | | | | | | | | Kg |
|---|---|---|---|---|---|---|---|---|---|---|---|---|
| 1~ | 3~ | B | C | D | E | H2 | Mt | DNM | I | L | M | |
| **DH 80 (G)** | **DHT 80** | 105 | 337 | 288 | 53 | 74 | 284 | 1" ½ G | 180 | 255 | 380 | 14,5 |
| **DH 100 (G)** | **DHT 100** | 105 | 337 | 288 | 53 | 74 | 284 | | 180 | 255 | 380 | 16 |

# DC

**Sewage**
High Head

DC 160-310

DCT 410-1000

DCT 410-1000/P

Centrifugal drainage high head pumps ideal for civil and industrial applications, specifically designed for very heavy use. Available in the mobile or permanent versions with coupling feet.

Grey water

## Construction features

| | |
|---|---|
| **Painting** | cataphoresis |
| **Pump body** | cast iron |
| **Impeller** | cast iron |
| **Mechanical seal** | double seal with oil barrier: silicon carbide on pump side, ceramic-graphite on motor side |
| **Motor shaft** | stainless steel AISI 304 |
| **Free passage** | Ø max 10 mm |
| **Max submergence** | 20 m |
| **Liquid temperature** | 0 - 40 °C |
| **Cable** | H07 RN8F, 10 m |
| **Bolts** | A2 stainless steel |
| **Foot support** | galvanized iron |
| **Gaskets** | NBR rubber |

## Motor

| | |
|---|---|
| **2 poles induction motor** | 3~ 230V - 50Hz<br>3~ 400V - 50Hz<br>3~ 230/400V - 50Hz<br>3~ 400/690V - 50Hz<br><br>1~ 230V - 50Hz<br>required run capacitor (35µF for 1,5HP model, 50µF for 2HP model) |
| **Insulation class** | F |
| **Protection degree** | IPX8 |

| LOTS | | | | |
|---|---|---|---|---|
| TYPE | TRUCK | | CONTAINER | |
| | PALLET (cm) | N° pumps | PALLET (cm) | N° pumps |
| **DC(T) 160÷310** | 85×110×145 | 18 | 85×110×190 | 27 |
| **DCT 410-560** | 85×110×170 | 12 | 85×110×170 | 12 |
| **DCT 750-1000** | 100×120190 | 12 | 100×120×190 | 12 |

**DC T 560 -CF**

- -CF: counter-flange — not included / CF included
- T: motor — 1~ / T 3~
- DC: pump type

# DC

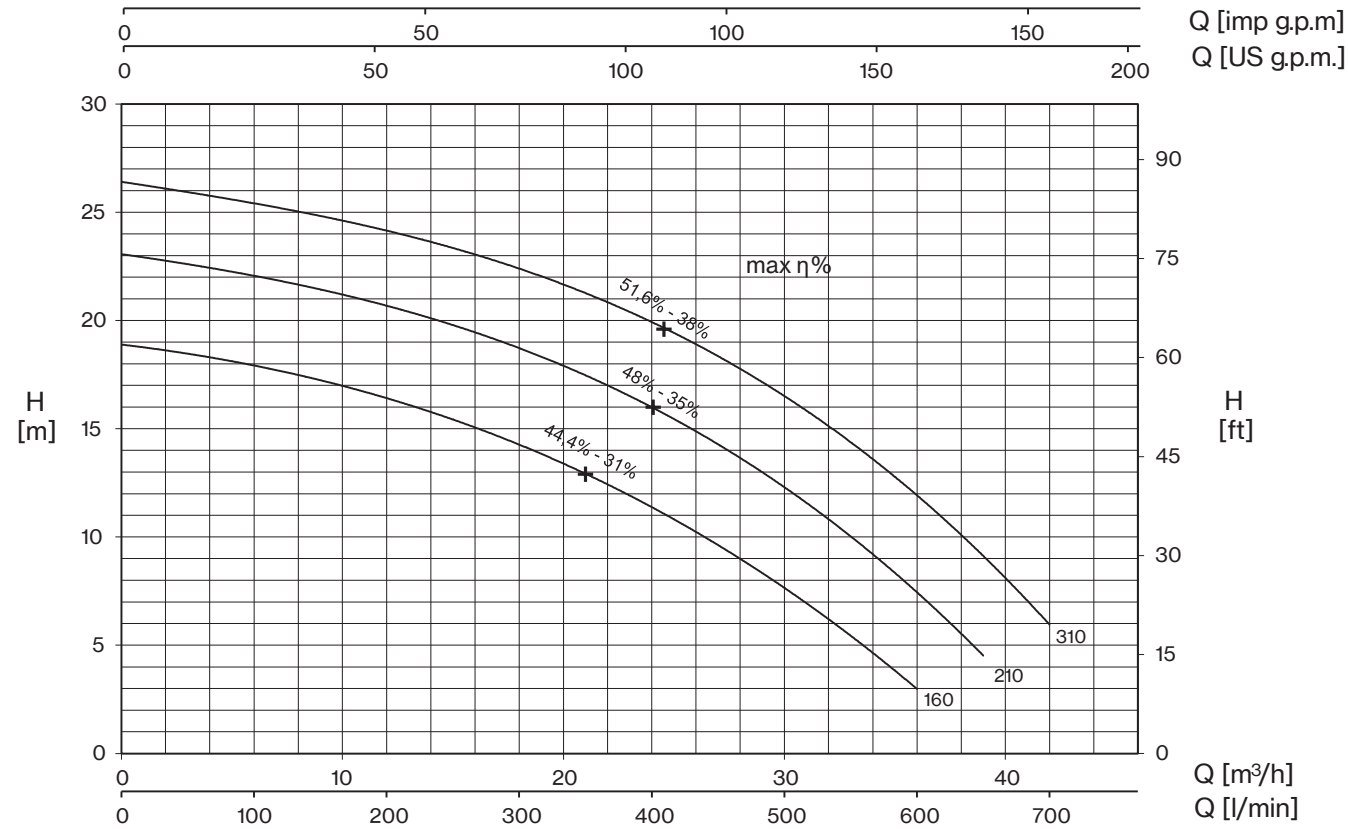


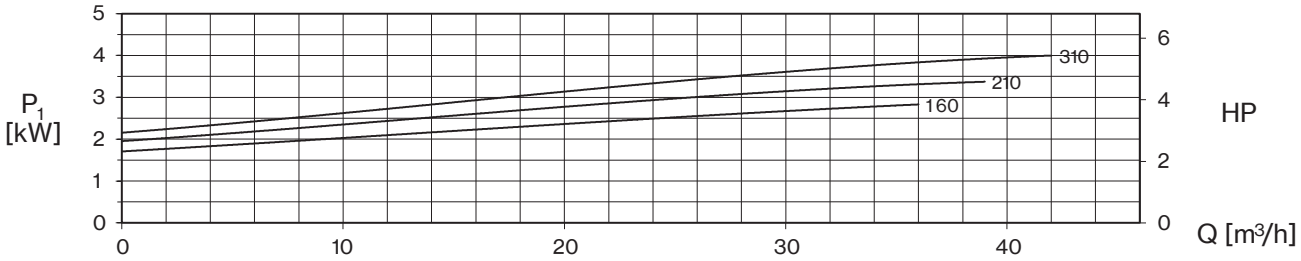


| TYPE - 50 Hz | | CURRENT | | | | |
|---|---|---|---|---|---|---|
| 1~ | 3~ | 1~ 230 V | 3~ 230V (*) | 3~ 400V | 230/400 V ⅄/△ (*) | 400/690 V ⅄/△ |
| **DC 160** | **DCT 160** | 13,8 | 8,3 | 4,8 | - | - |
| **DC 210** | **DCT 210** | 16,5 | 10,2 | 5,9 | - | - |
| **-** | **DCT 310** | - | 12 | 6,9 | - | - |

(*) no standard execution

+ max η %

max hydraulic efficiency and respective total efficiency

| TYPE - 50 Hz | | P2 | | P1 | | Q (m³/h - l/min) | | | | | | | | |
|---|---|---|---|---|---|---|---|---|---|---|---|---|---|---|
| 1~ | 3~ | | | 1~ | 3~ | 0 | 6 | 12 | 18 | 24 | 30 | 36 | 39 | 42 |
| | | | | | | 0 | 100 | 200 | 300 | 400 | 500 | 600 | 650 | 700 |
| | | HP | kW | kW | | H (m) | | | | | | | | |
| **DC 160** | **DCT 160** | 1,5 | 1,1 | 3,0 | 2,8 | 18,9 | 17,9 | 16,4 | 14,3 | 11,4 | 7,6 | 3,0 | | |
| **DC 210** | **DCT 210** | 2 | 1,5 | 3,7 | 3,4 | 23,0 | 22,2 | 20,7 | 18,6 | 15,9 | 12,5 | 7,4 | 4,5 | |
| **-** | **DCT 310** | 3 | 2,2 | - | 4,0 | 26,4 | 25,4 | 24,2 | 22,4 | 19,9 | 16,4 | 12,1 | 9,1 | 5,9 |

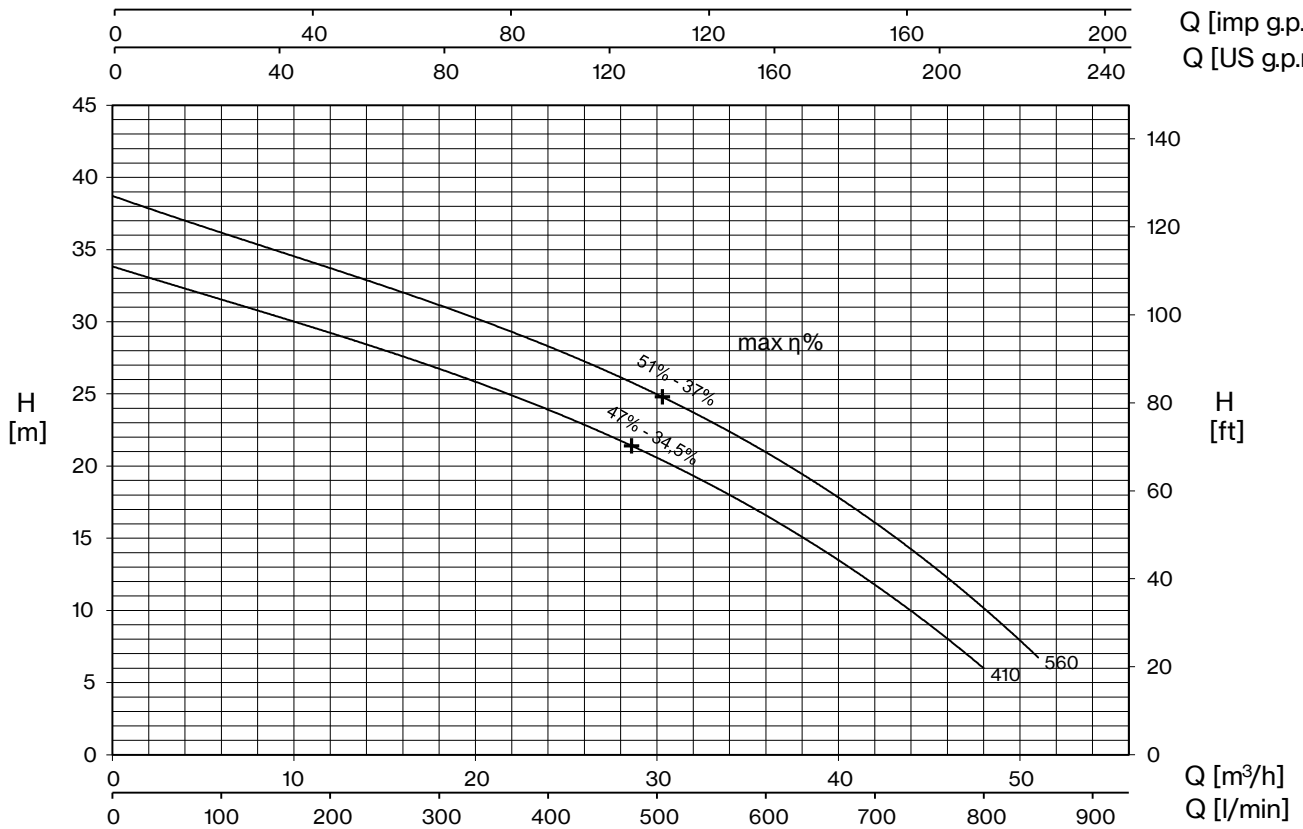


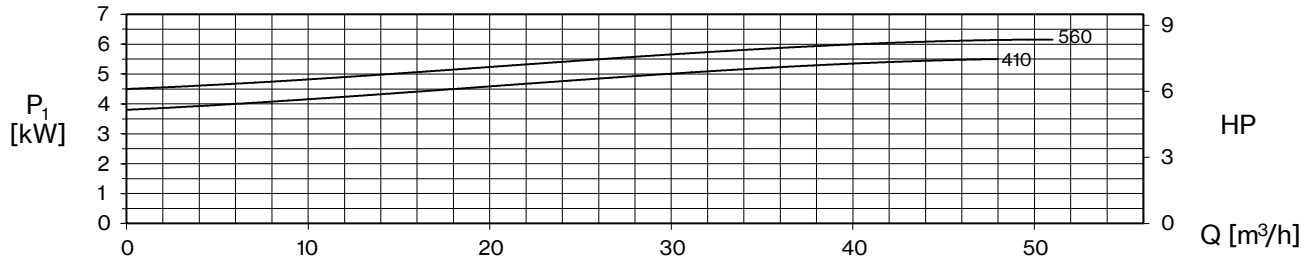


| TYPE - 50 Hz | CURRENT | | | |
|---|---|---|---|---|
| 3~ | 3~ 230V (*) | 3~ 400V | 230/400 V ⅄ / △ (*) | 400/690 V ⅄ / △ |
| **DCT 410** | 15,4 | 8,9 | - | - |
| **DCT 560** | 17,6 | 10,2 | - | - |

(*) no standard execution

+ max η %

max hydraulic efficiency and respective total efficiency

| TYPE - 50 Hz | P2 | | P1 | Q (m³/h - l/min) | | | | | | | | | |
|---|---|---|---|---|---|---|---|---|---|---|---|---|---|
| 3~ | | | | 0 | 6 | 12 | 18 | 24 | 30 | 36 | 42 | 48 | 51 |
| | | | | 0 | 100 | 200 | 300 | 400 | 500 | 600 | 700 | 800 | 850 |
| | HP | kW | kW | H (m) | | | | | | | | | |
| **DCT 410** | 4 | 3 | 5,5 | 33,8 | 31,6 | 29,2 | 26,8 | 23,9 | 20,5 | 16,5 | 12,0 | 5,9 | |
| **DCT 560** | 5,5 | 4 | 6,3 | 38,7 | 36,1 | 33,9 | 31,2 | 28,3 | 24,7 | 20,9 | 16,3 | 10,4 | 6,5 |

# DC

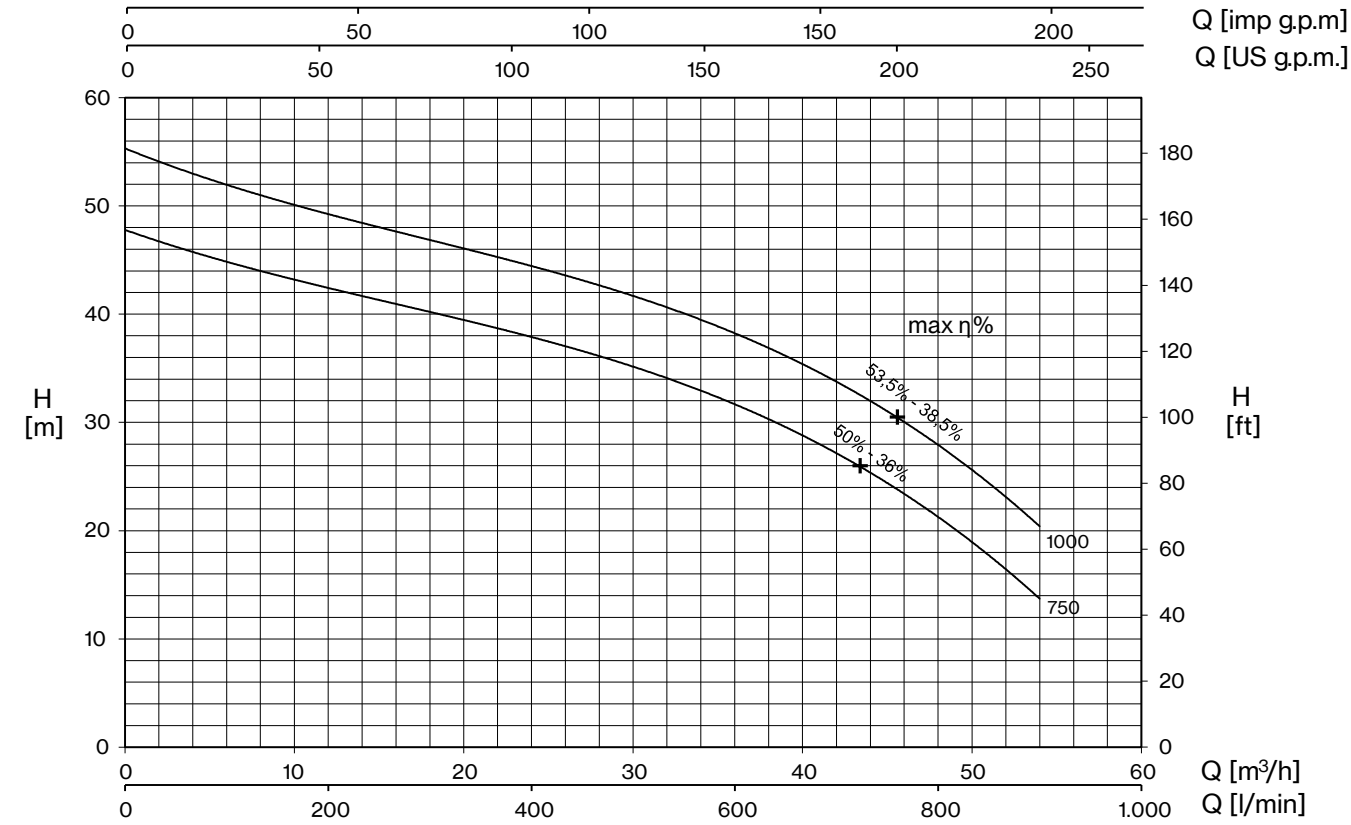


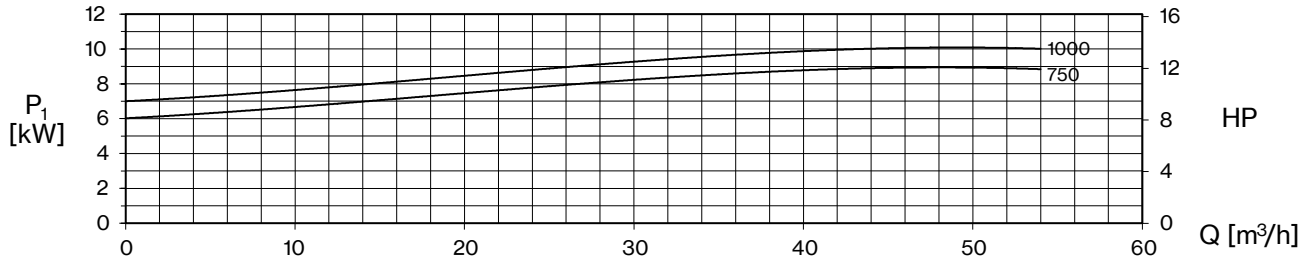


| TYPE - 50 Hz | CURRENT | | | |
|---|---|---|---|---|
| 3~ | 3~ 230V (*) | 3~ 400V | 230/400 V ⅄ / △ (*) | 400/690 V ⅄ / △ |
| **DCT 750** | - | 15,3 | 26,5 | 15,3 |
| **DCT 1000** | - | 17,5 | 30,3 | 17,5 |

(*) no standard execution

+ max η %

max hydraulic efficiency and respective total efficiency

| TYPE - 50 Hz | P2 | | P1 | Q (m³/h - l/min) | | | | | | | | |
|---|---|---|---|---|---|---|---|---|---|---|---|---|
| 3~ | | | | 0 | 12 | 18 | 24 | 30 | 36 | 42 | 48 | 54 |
| | | | | 0 | 200 | 300 | 400 | 500 | 600 | 700 | 800 | 900 |
| | HP | kW | kW | H (m) | | | | | | | | |
| **DCT 750** | 7,5 | 5,5 | 9,0 | 47,6 | 42,9 | 40,4 | 37,7 | 34,7 | 31,2 | 27,4 | 22,3 | 13,1 |
| **DCT 1000** | 10 | 7,5 | 10,3 | 55,1 | 49,8 | 47,1 | 44,2 | 41,1 | 37,8 | 34,0 | 29,1 | 19,7 |

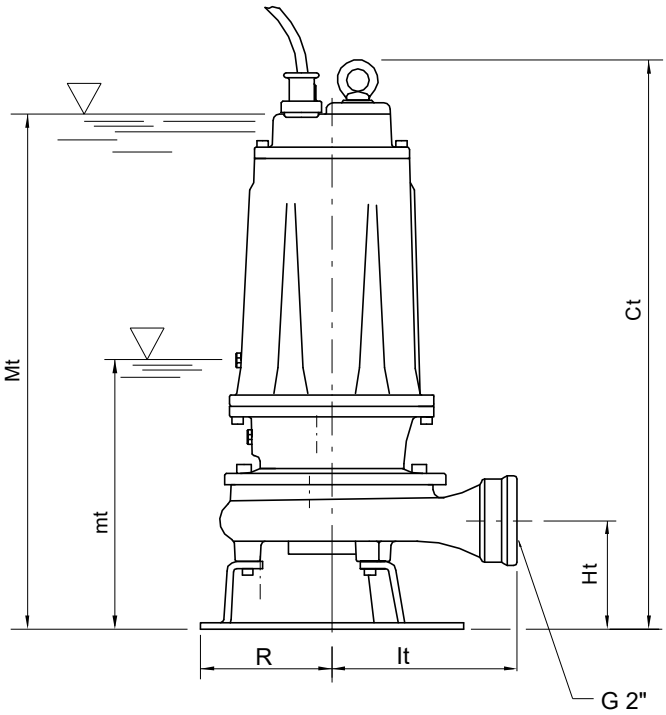


## ACCESSORIES

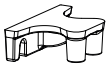

**Quick coupling kit**

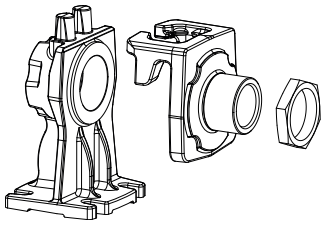

mt: minimum working level
Mt: minimum submengence level for continuos duty

| TYPE | | DIMENSIONS (mm) | | | | | | | Kg |
|---|---|---|---|---|---|---|---|---|---|
| 1~ | 3~ | Ct | Ht | R | It | mt | Mt | DNM | |
| **DC 160** | **DCT 160** | 513 | 102 | 117 | 174 | 205 | 475 | 2"G | 37 |
| **DC 210** | **DCT 210** | 513 | 102 | 117 | 174 | 205 | 475 | 2"G | 37,5 |
| **-** | **DCT 310** | 513 | 102 | 117 | 174 | 205 | 475 | 2"G | 37 |

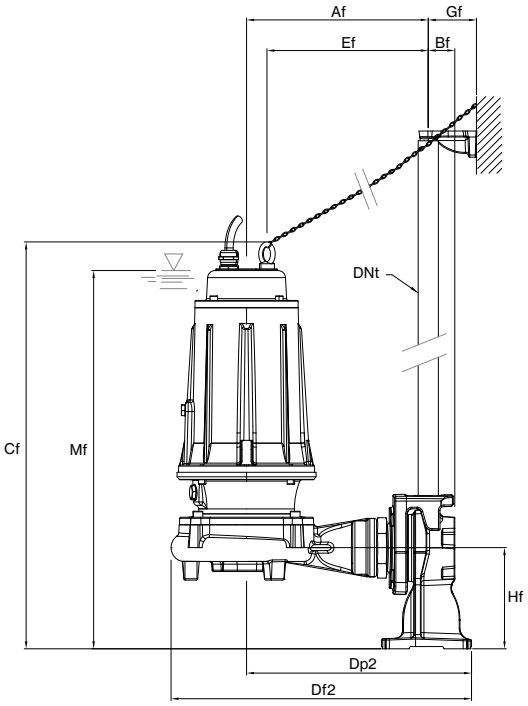


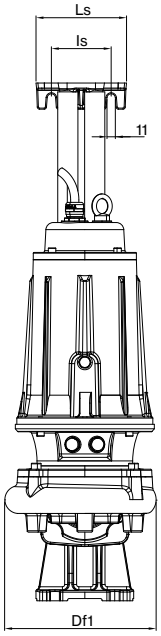


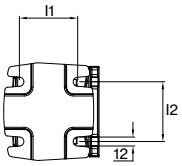


Mf: minimum submengence level for continuos duty

| TYPE | | DIMENSIONS (mm) | | | | | | | | | | | | | |
|---|---|---|---|---|---|---|---|---|---|---|---|---|---|---|---|
| 1~ | 3~ | Af | Bf | Cf | Df1 | Df2 | Dp2 | Ef | Gf | Hf | I1 | I2 | Is | Ls | Mf |
| **DC 160** | **DCT 160** | 243 | 36 | 545 | 203 | 402 | 301 | 216 | 65 | 135 | 78 | 80 | 80 | 121 | 506 |
| **DC 210** | **DCT 210** | 243 | 36 | 545 | 203 | 402 | 301 | 216 | 65 | 135 | 78 | 80 | 80 | 121 | 506 |
| **-** | **DCT 310** | 243 | 36 | 545 | 203 | 402 | 301 | 216 | 65 | 135 | 78 | 80 | 80 | 121 | 506 |

# DC

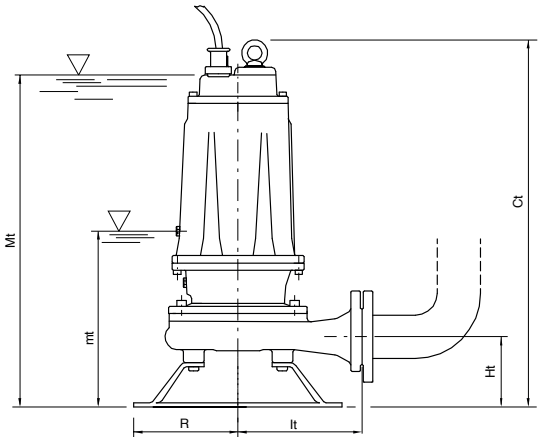


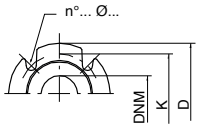


## ACCESSORIES

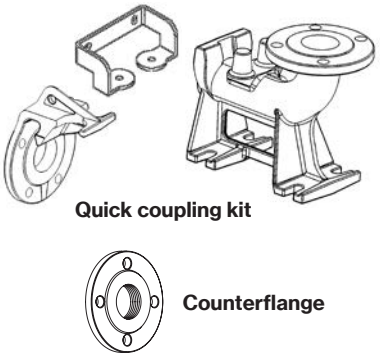


mt: minimum working level
Mt: minimum submengence level for continuos duty

| TYPE | DIMENSIONS (mm) | | | | | | | Kg |
|---|---|---|---|---|---|---|---|---|
| 3~ | Ct | Ht | R | It | mt | Mt | DNM | |
| **DCT 410** | 595 | 112 | 160 | 187 | 263 | 550 | 50 | 60,5 |
| **DCT 560** | 595 | 112 | 160 | 187 | 263 | 550 | 50 | 63,5 |
| **DCT 750** | 680 | 160 | 180 | 250 | 280 | 630 | 65 | 91 |
| **DCT 1000** | 680 | 160 | 180 | 250 | 280 | 630 | 65 | 93,5 |

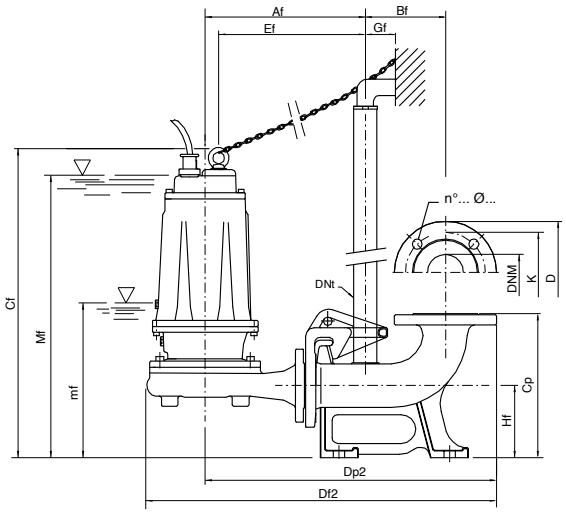


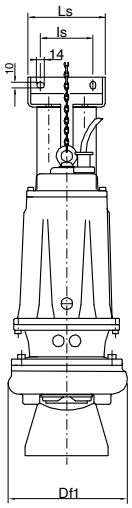


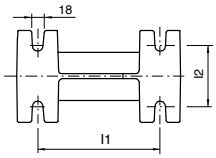


mf: minimum working level
Mf: minimum submengence level for continuos duty

| Flange UNI PN 10 (mm) | | | |
|---|---|---|---|
| DNM | K | D | n°... ø... |
| 50 | 125 | 165 | 4... 18... |
| 65 | 145 | 185 | 4... 18... |

| TYPE | DIMENSIONS (mm) | | | | | | | | | | | | | | | | | |
|---|---|---|---|---|---|---|---|---|---|---|---|---|---|---|---|---|---|---|
| 3~ | Af | Bf | Cf | Cp | Df1 | Df2 | Dp2 | DNt | Ef | Gf | Hf | I1 | I2 | Is | Ls | mf | Mf | DNM |
| **DCT 410/P** | 300 | 145 | 614 | 260 | 237 | 654 | 535 | 1" ¼ | 269 | 55 | 130 | 200 | 100 | 95 | 140 | 290 | 566 | 50 |
| **DCT 560/P** | 300 | 145 | 614 | 260 | 237 | 654 | 535 | 1" ¼ | 269 | 55 | 130 | 200 | 100 | 95 | 140 | 290 | 566 | 50 |
| **DCT 750/P** | 331 | 145 | 656 | 260 | 279 | 701 | 569 | 1" ¼ | 296 | 55 | 130 | 200 | 100 | 95 | 140 | 290 | 600 | 65 |
| **DCT 1000/P** | 331 | 145 | 656 | 260 | 279 | 701 | 569 | 1" ¼ | 296 | 55 | 130 | 200 | 100 | 95 | 140 | 290 | 600 | 65 |

| TYPE | PROTECTION | | 1 PUMP CONTROL PANEL | | | 2 PUMPS CONTROL PANEL | | |
|---|---|---|---|---|---|---|---|---|
| | 1~ 230V | 3~ 400V | 1~ 230V | 3~ 400V | 400/690 V | 1~ 230V | 3~ 400V | 400/690 V |
| **DC 160** | PMC 15/35-15 | PT 20-30-40/4.3-6.8 | EQSM + 35µF | EQSMT 10 | - | EQ2SM + 2×35µF | EQ2SMT 10 | - |
| **DC 210** | PMC 20/50-18 | PT 20-30-40/4.3-6.8 | EQSM + 50µF | EQSMT 10 | - | EQ2SM + 2×50µF | EQ2SMT 10 | - |
| **DCT 310** | - | PT 40-50/5.7-9.1 | - | EQSMT 10 | - | - | EQ2SMT 10 | - |
| **DCT 410** | - | PT 55-75/8.6-13.5 | - | EQSMT 10 | - | - | EQ2SMT 10 | - |
| **DCT 560** | - | PT 55-75/8.6-13.5 | - | EQSMT 10 | - | - | EQ2SMT 10 | - |
| **DCT 750** | - | PT 100/12.5-16.5 | - | EQSMT 10 | QST 7 | - | EQ2SMT 10 | Q2ST 7 |
| **DCT 1000** | - | PT 125-150/16-21 | - | EQSMT 10 | QST 10 | - | EQ2SMT 15 | Q2ST 10 |

# DB

## Drainage
Double-channel

Drainage pumps with “Double-Channel” impeller for pumping waste waters and liquids with suspended solids; ideal for civil and household applications. The single-phase version includes a built-in capacitor, a thermal protector and it can be equipped with a float switch.

Grey water

Black water

## Construction features

| | |
|---|---|
| **Painting** | cataphoresis |
| **Pump body** | cast iron |
| **Shell, motor cover, base support** | stainless steel |
| **Impeller** | stainless steel |
| **Mechanical seal** | double seal with oil chamber: silicon carbide on pump side, ceramic-graphite on motor side |
| **Motor shaft** | stainless steel AISI 430 |
| **Free passage** | Ø max 50 mm |
| **Max submergence** | 5 m |
| **Liquid temperature** | 0 - 40 °C |
| **Cable** | H07 RN8F, 10 m |
| **G** | float switch |

## Motor

| | |
|---|---|
| **2 poles induction motor** | 3~ 400V - 50Hz<br>1~ 230V - 50Hz<br>(with thermal protection) |
| **Insulation class** | F |
| **Protection degree** | IPX8 |

| LOTS | | | | |
|---|---|---|---|---|
| TYPE | TRUCK | | CONTAINER | |
| | PALLET (cm) | N° pumps | PALLET (cm) | N° pumps |
| **DB(T)** | 80×120×160 | 48 | 80×120×160 | 48 |

**DB** ☐ **100** **G**

- ☐ without float switch
- **G** with float switch
- motor ☐ 1~ **T** 3~
- pump type

# DB

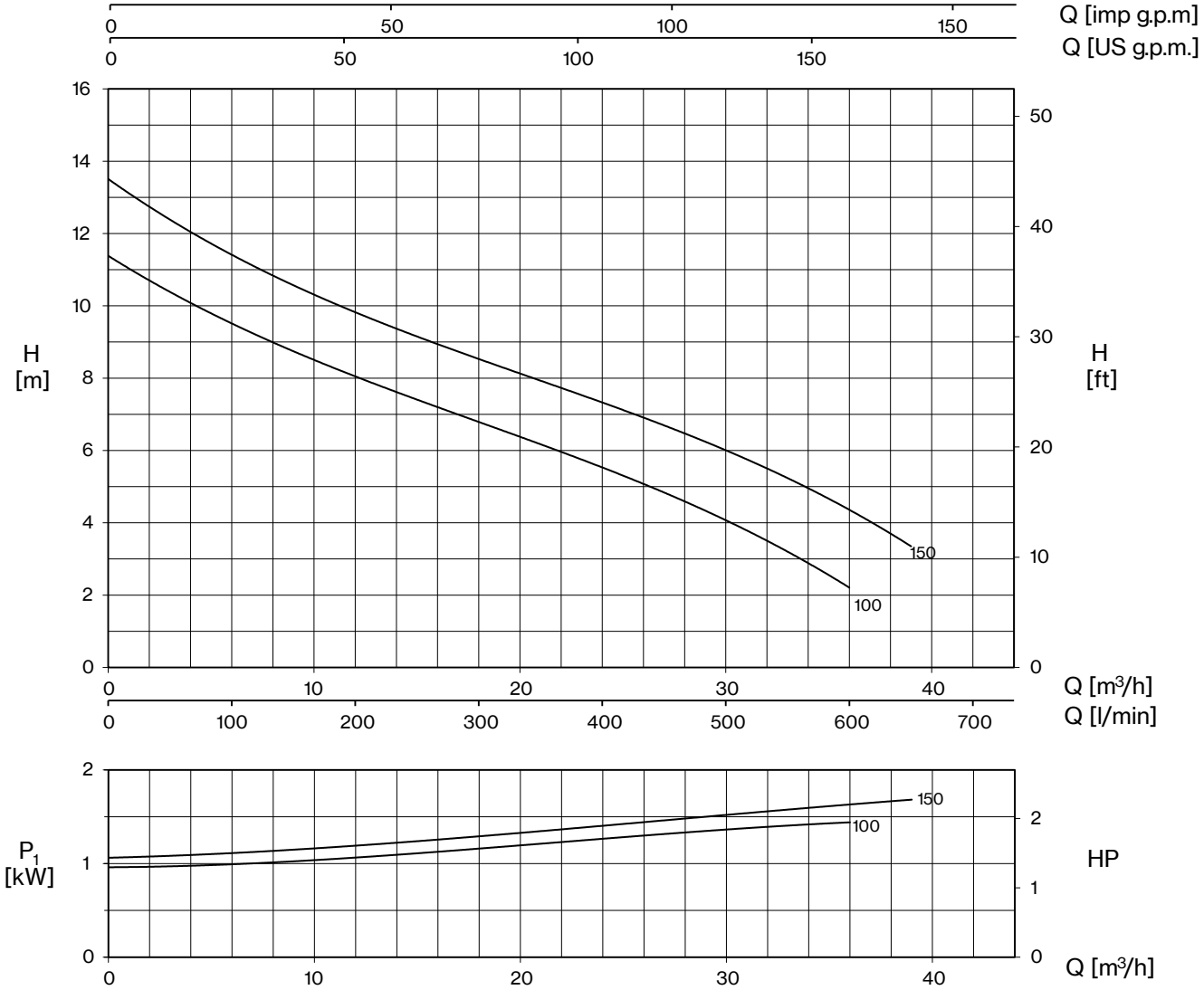


| TYPE - 50 Hz | | P1 | CURRENT | | Q (m³/h - l/min) | | | | | | | |
|---|---|---|---|---|---|---|---|---|---|---|---|---|
| 1~ | 3~ | | 1~ 230V | 3~ 400V | 0 | 6 | 12 | 18 | 24 | 30 | 36 | 39 |
| | | | | | 0 | 100 | 200 | 300 | 400 | 500 | 600 | 650 |
| | | kW | A | | H (m) | | | | | | | |
| **DB 100 (G)** | **DBT 100** | 1,35 | 5,9 | 2,8 | 11,4 | 9,5 | 8,0 | 6,8 | 5,6 | 4,0 | 2,2 | |
| **DB 150 (G)** | **DBT 150** | 1,7 | 8,0 | 3,0 | 13,6 | 11,5 | 9,8 | 8,5 | 7,3 | 6,0 | 4,3 | 3,4 |

E: maximum emptying level
Mt: minimum liquid level for continuos duty

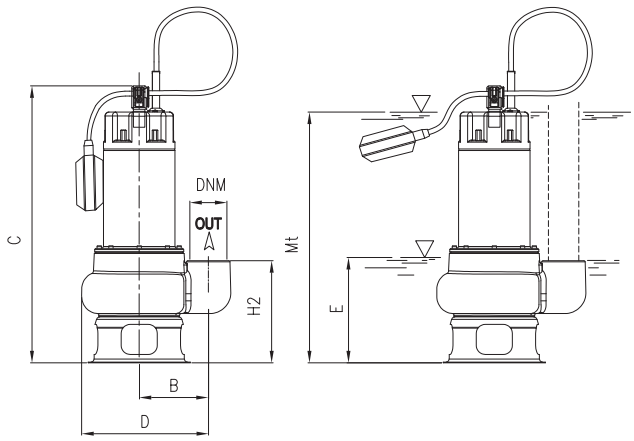


| TYPE | | DIMENSIONS (mm) | | | | | | | | | | Kg |
|---|---|---|---|---|---|---|---|---|---|---|---|---|
| 1~ | 3~ | B | C | D | E | H2 | Mt | DNM | I | L | M | |
| **DB 100 (G)** | **DBT 100** | 115 | 469 | 210 | 160 | 170 | 417 | 2” G | 200 | 260 | 470 | 17 |
| **DB 150 (G)** | **DBT 150** | 115 | 469 | 210 | 160 | 170 | 417 | | 200 | 260 | 470 | 18,5 |

# DM

**Sewage**
Single-channel

Single channel centrifugal drainage pumps. Specifically designed for heavy duty applications they guarantee high capacity at medium head; ideal for civil and industrial applications. Available in mobile or permanent version with coupling feet.

DM 160-560

DMT 1000

Grey water

Black water

## Construction features

| | |
|---|---|
| **Painting** | cataphoresis |
| **Pump body** | cast iron |
| **Impeller** | cast iron |
| **Mechanical seal** | double seal with oil barrier: silicon carbide on pump side, ceramic-graphite on motor side |
| **Motor shaft** | stainless steel AISI 304 |
| **Free passage** | Ø max 50 mm |
| **Max submergence** | 20 m |
| **Liquid temperature** | 0 - 40 °C |
| **Cable** | H07 RN8F, 10 m |
| **Bolts** | A2 stainless steel |
| **Foot support** | galvanized iron |
| **Gaskets** | NBR rubber |

## Motor

| | |
|---|---|
| **2 poles induction motor** | 3~ 230V - 50Hz<br>3~ 400V - 50Hz<br>3~ 230/400V - 50Hz<br>3~ 400/690V - 50Hz<br><br>1~ 230V - 50Hz<br>required run capacitor (35µF for 1,5HP model, 50µF for 2HP model) |
| **Insulation class** | F |
| **Protection degree** | IPX8 |

| LOTS | | | | |
|---|---|---|---|---|
| TYPE | TRUCK | | CONTAINER | |
| | PALLET (cm) | N° pumps | PALLET (cm) | N° pumps |
| **DM(T) 160÷310** | 85×110×145 | 18 | 85×110×190 | 27 |
| **DMT 410-560** | 85×110×170 | 12 | 85×110×170 | 12 |
| **DMT 1000** | 100×120×190 | 12 | 100×120×190 | 12 |

**DM T 560 -CF**

- -CF: counter-flange — not included / CF included
- T: motor — 1~ / T 3~
- DM: pump type

# DM

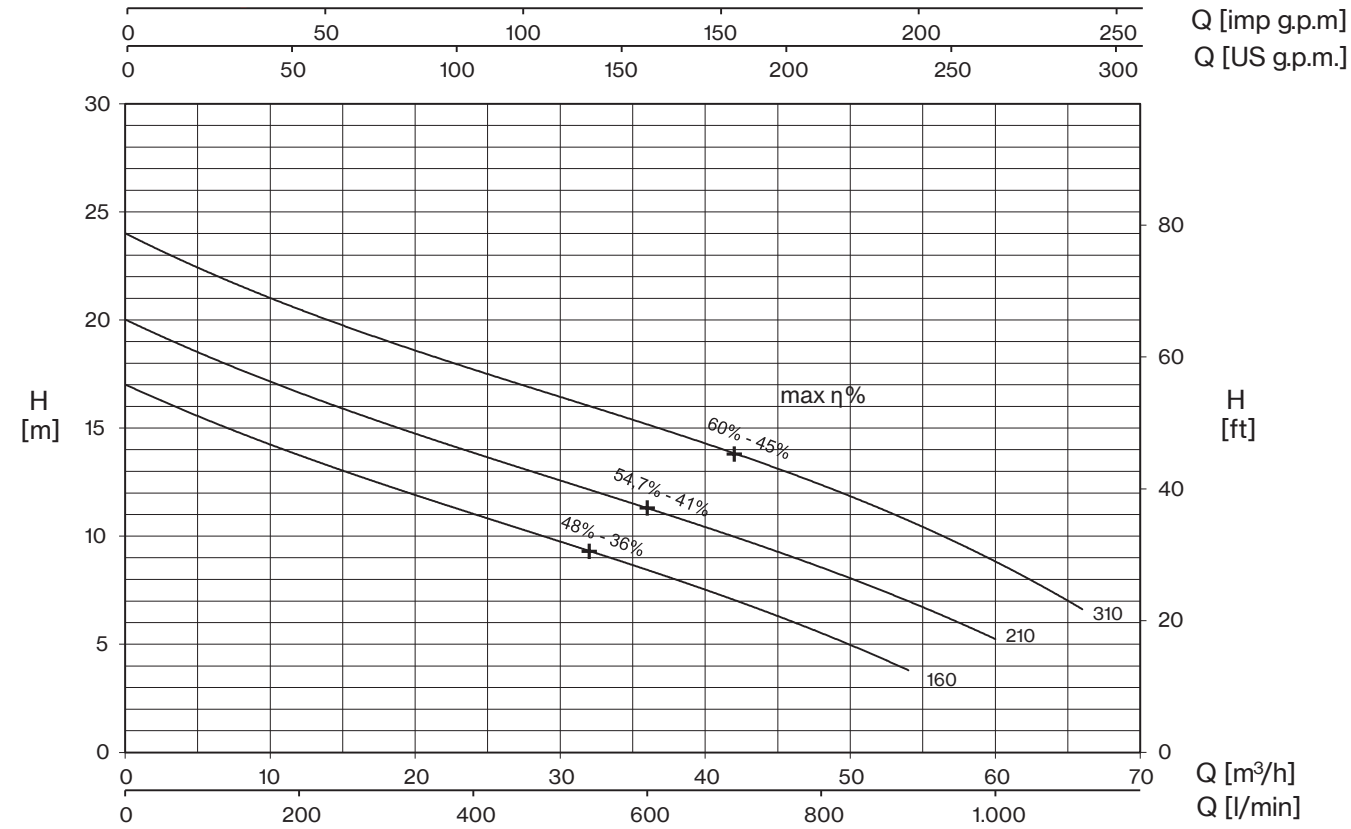


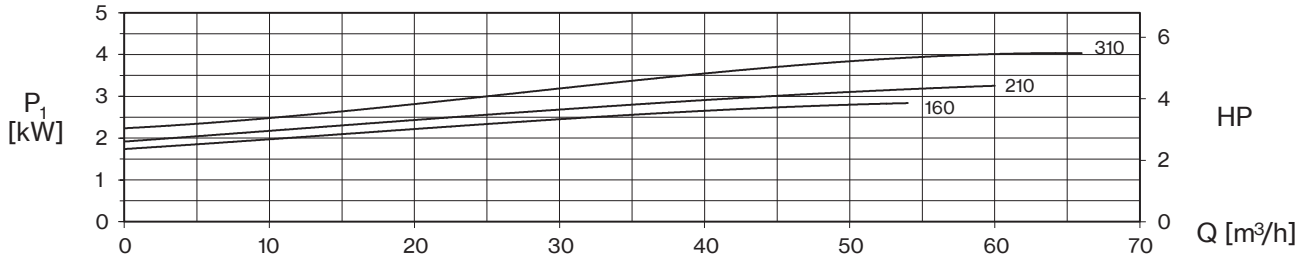


| TYPE - 50 Hz | | CURRENT | | | | |
|---|---|---|---|---|---|---|
| 1~ | 3~ | 230 V | 3~ 230V (*) | 3~ 400V | 230/400 V ⅄ / △ (*) | 400/690 V ⅄ / △ |
| **DM 160** | **DMT 160** | 12,5 | 7,6 | 4,4 | - | - |
| **DM 210** | **DMT 210** | 15 | 9,5 | 5,5 | - | - |
| **-** | **DMT 310** | - | 12 | 6,9 | - | - |

(*) no standard execution

## + max η %

max hydraulic efficiency and respective total efficiency

| TYPE - 50 Hz | | P2 | | P1 | | Q (m³/h - l/min) | | | | | | | | | | | |
|---|---|---|---|---|---|---|---|---|---|---|---|---|---|---|---|---|---|
| 1~ | 3~ | | | 1~ | 3~ | 0 | 6 | 12 | 18 | 24 | 30 | 36 | 42 | 48 | 54 | 60 | 66 |
| | | | | | | 0 | 100 | 200 | 300 | 400 | 500 | 600 | 700 | 800 | 900 | 1000 | 1100 |
| | | HP | kW | kW | | H (m) | | | | | | | | | | | |
| **DM 160** | **DMT 160** | 1,5 | 1,1 | 2,8 | 2,6 | 17,0 | 15,3 | 13,8 | 12,3 | 11,0 | 9,8 | 8,4 | 7,1 | 5,5 | 3,8 | | |
| **DM 210** | **DMT 210** | 2 | 1,5 | 3,3 | 3,1 | 19,9 | 18,4 | 16,7 | 15,2 | 13,8 | 12,4 | 11,3 | 10,1 | 8,6 | 7,0 | 5,2 | |
| **-** | **DMT 310** | 3 | 2,2 | - | 4,1 | 23,9 | 22,2 | 20,6 | 19,1 | 17,8 | 16,3 | 15,0 | 13,8 | 12,3 | 10,9 | 9,1 | 6,4 |

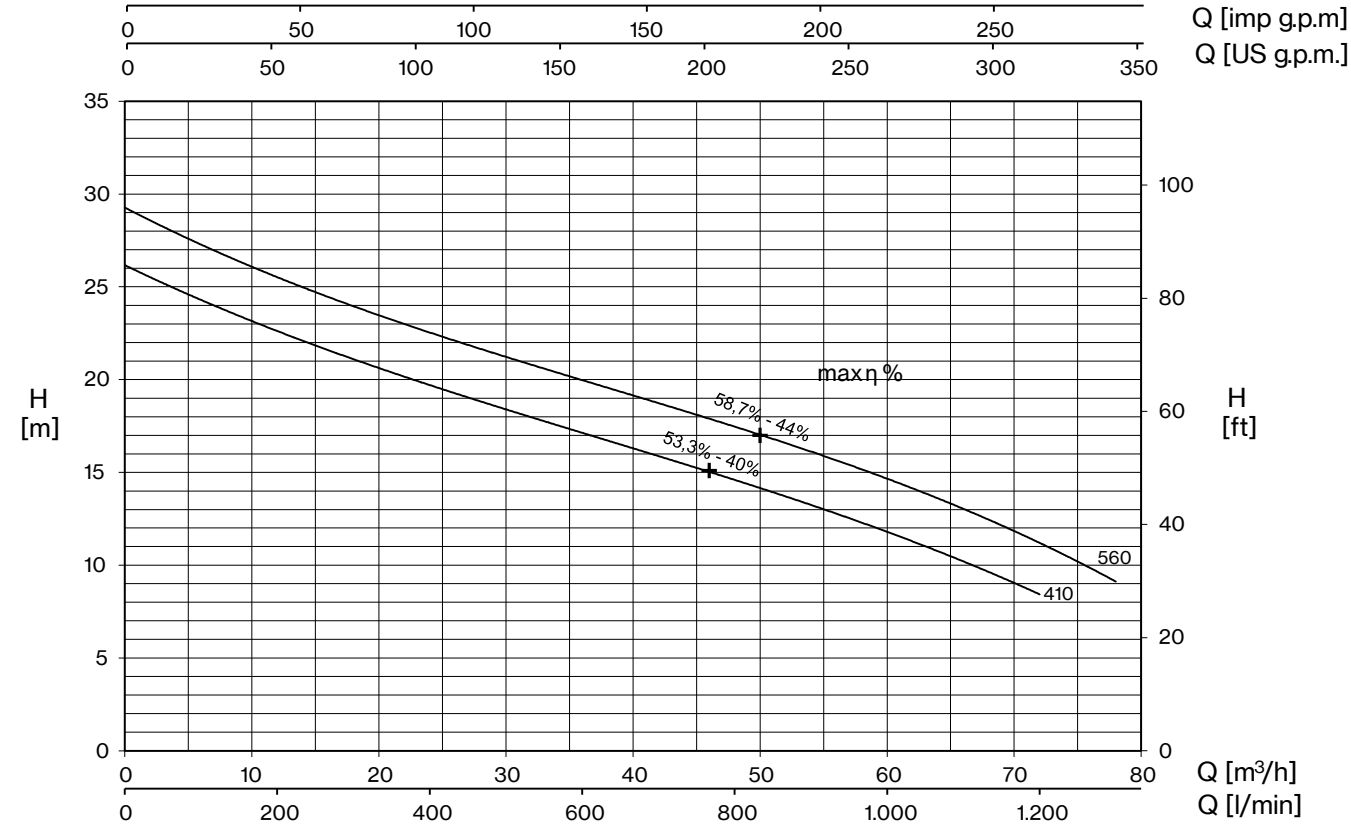


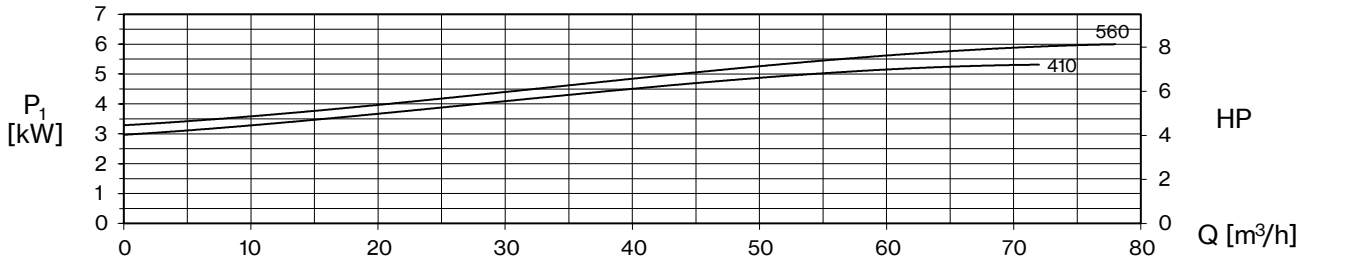


| TYPE - 50 Hz | CURRENT | | | |
|---|---|---|---|---|
| 3~ | 3~ 230V (*) | 3~ 400V | 230/400 V ⅄ / △ (*) | 400/690 V ⅄ / △ |
| **DMT 410** | 15,4 | 8,9 | - | - |
| **DMT 560** | 17,6 | 10,2 | - | - |

(*) no standard execution

+ max η %

max hydraulic efficiency and respective total efficiency

| TYPE - 50 Hz | P2 | | P1 | Q (m³/h - l/min) | | | | | | | | | |
|---|---|---|---|---|---|---|---|---|---|---|---|---|---|
| 3~ | | | | 0 | 6 | 18 | 30 | 42 | 54 | 60 | 66 | 72 | 78 |
| | | | | 0 | 100 | 300 | 500 | 700 | 900 | 1000 | 1100 | 1200 | 1300 |
| | HP | kW | kW | H (m) | | | | | | | | | |
| **DMT 410** | 4 | 3 | 5,3 | 26 | 24,6 | 21,1 | 18,2 | 15,9 | 13,3 | 11,8 | 10,3 | 8,3 | |
| **DMT 560** | 5,5 | 4 | 6,0 | 29,1 | 27,5 | 24,1 | 21,1 | 18,6 | 16,1 | 14,7 | 13,1 | 11,4 | 8,9 |

# DM

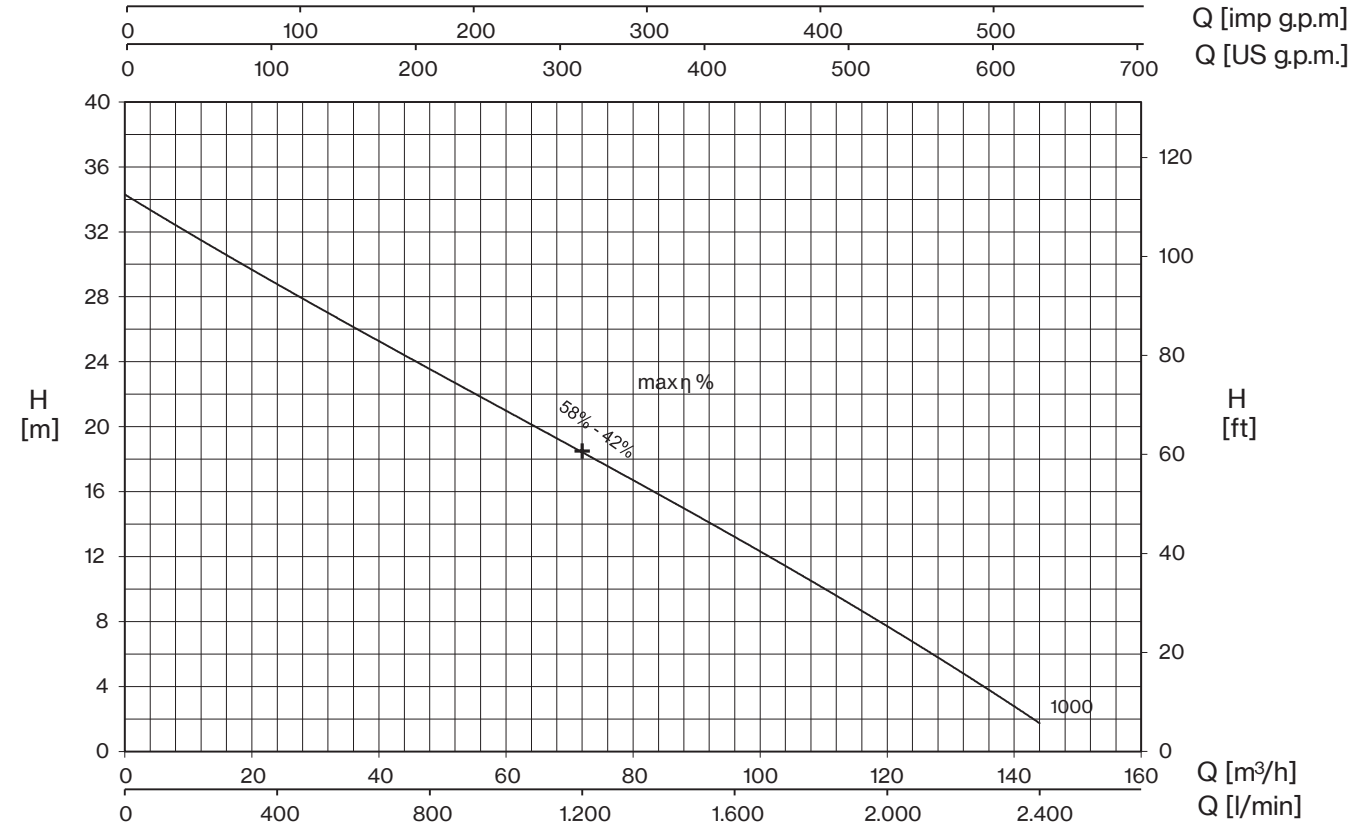


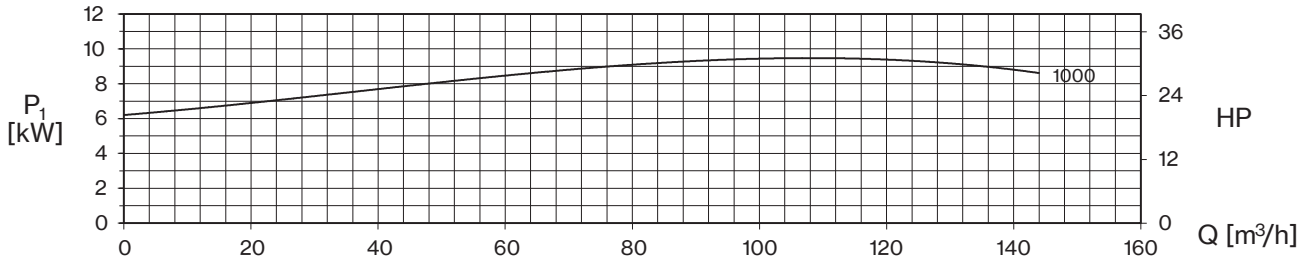


| TYPE - 50 Hz | CURRENT | | | |
|---|---|---|---|---|
| 3~ | 3~ 230V (*) | 3~ 400V | 230/400 V ⅄ / △ (*) | 400/690 V ⅄ / △ |
| **DMT 1000** | - | 16,3 | 28,2 | 16,3 |

(*) no standard execution

+ max η %

max hydraulic efficiency and respective total efficiency

| TYPE - 50 Hz | P2 | | P1 | Q (m³/h - l/min) | | | | | | | | | | | | |
|---|---|---|---|---|---|---|---|---|---|---|---|---|---|---|---|---|
| 3~ | | | | 0 | 12 | 24 | 36 | 48 | 60 | 72 | 84 | 96 | 108 | 120 | 132 | 144 |
| | | | | 0 | 200 | 400 | 600 | 800 | 1000 | 1200 | 1400 | 1600 | 1800 | 2000 | 2200 | 2400 |
| | HP | kW | kW | H (m) | | | | | | | | | | | | |
| **DMT 1000** | 10 | 7,5 | 9,6 | 34,9 | 30,9 | 28,3 | 26,1 | 23,7 | 21,3 | 18,7 | 16,1 | 13,2 | 10,2 | 7,4 | 4,6 | 2,1 |

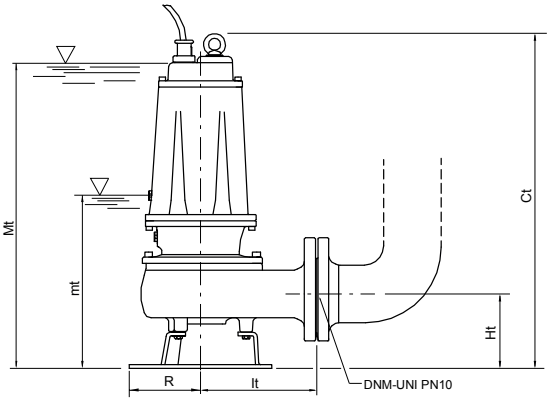


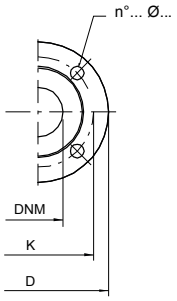


## ACCESSORIES

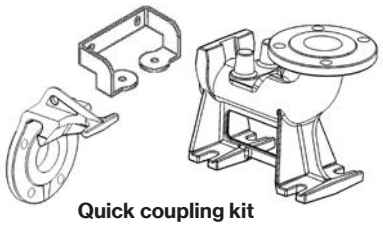

Quick coupling kit

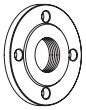

Counterflange

mt: minimum working level
Mt: minimum submengence level for continuos duty

| TYPE | | DIMENSIONS (mm) | | | | | | | Kg | |
|---|---|---|---|---|---|---|---|---|---|---|
| 1~ | 3~ | Ct | Ht | R | It | mt | Mt | DNM | 1~ | 3~ |
| **DM 160** | **DMT 160** | 551 | 123 | 117 | 191 | 243 | 513 | 65 | 41,5 | 40 |
| **DM 210** | **DMT 210** | 551 | 123 | 117 | 191 | 243 | 513 | 65 | 42,5 | 41,5 |
| **-** | **DMT 310** | 551 | 123 | 117 | 191 | 243 | 513 | 65 | - | 42,5 |
| **-** | **DMT 410** | 645 | 148 | 160 | 210 | 285 | 600 | 80 | - | 68 |
| **-** | **DMT 560** | 645 | 148 | 160 | 210 | 285 | 600 | 80 | - | 71,5 |
| **-** | **DMT 1000** | 725 | 178 | 180 | 232 | 358 | 670 | 80 | - | 94 |

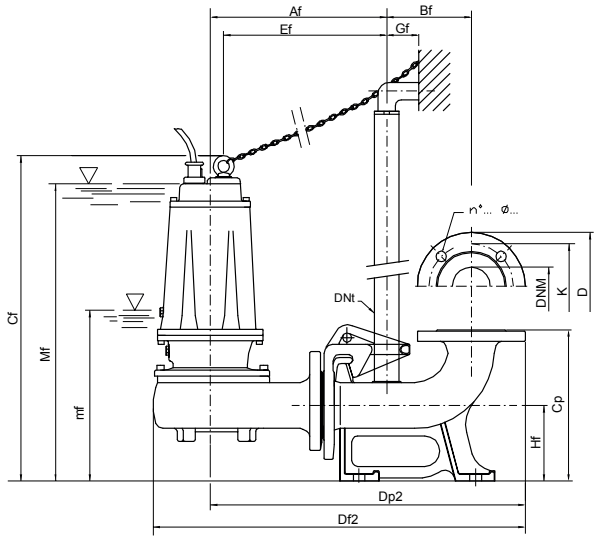


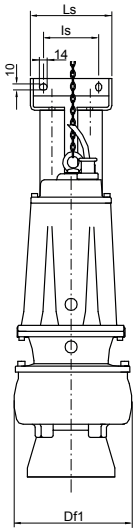


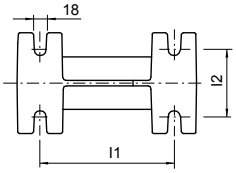


mf: minimum working level
Mf: minimum submengence level for continuos duty

| Flange UNI PN 10 (mm) | | | |
|---|---|---|---|
| DNM | K | D | n°... ø... |
| 65 | 145 | 185 | 4... 18... |
| 80 | 160 | 200 | 8... 18... |

| TYPE | | DIMENSIONS (mm) | | | | | | | | | | | | | | | | | |
|---|---|---|---|---|---|---|---|---|---|---|---|---|---|---|---|---|---|---|---|
| 1~ | 3~ | Af | Bf | Cf | Cp | Df1 | Df2 | Dp2 | DNt | Ef | Gf | Hf | l1 | l2 | Is | Ls | mf | Mf | DNM |
| **DM 160/P** | **DMT 160/P** | 303 | 145 | 560 | 260 | 200 | 639 | 542 | 1” ¼ | 280 | 55 | 130 | 200 | 100 | 95 | 140 | 251 | 521 | 65 |
| **DM 210/P** | **DM 210/P** | 303 | 145 | 560 | 260 | 200 | 639 | 542 | 1” ¼ | 280 | 55 | 130 | 200 | 100 | 95 | 140 | 251 | 521 | 65 |
| **-** | **DMT 310/P** | 303 | 145 | 560 | 260 | 200 | 639 | 542 | 1” ¼ | 280 | 55 | 130 | 200 | 100 | 95 | 140 | 251 | 521 | 65 |
| **-** | **DMT 410/P** | 350 | 165 | 690 | 340 | 220 | 722 | 615 | 2” | 319 | 85 | 190 | 250 | 140 | 130 | 180 | 327 | 642 | 80 |
| **-** | **DMT 560/P** | 350 | 165 | 690 | 340 | 220 | 722 | 615 | 2” | 319 | 85 | 190 | 250 | 140 | 130 | 180 | 327 | 642 | 80 |
| **-** | **DMT 1000/P** | 370 | 165 | 745 | 340 | 235 | 750 | 638 | 2” | 338 | 85 | 190 | 250 | 140 | 130 | 180 | 380 | 690 | 80 |

| TYPE | PROTECTION | | 1 PUMP CONTROL PANEL | | | 2 PUMPS CONTROL PANEL | | |
|---|---|---|---|---|---|---|---|---|
| | 1~ 230V | 3~ 400V | 1~ 230V | 3~ 400V | 400/690 V | 1~ 230V | 3~ 400V | 400/690 V |
| **DM 160** | PMC 15/35-15 | PT 20-30-40/4.3-6.8 | EQSM + 35µF | EQSMT 10 | - | EQ2SM + 2×35µF | EQ2SMT 10 | - |
| **DM 210** | PMC 20/50-18 | PT 20-30-40/4.3-6.8 | EQSM + 50µF | EQSMT 10 | - | EQ2SM + 2×50µF | EQ2SMT 10 | - |
| **DMT 310** | - | PT 40-50/5.7-9.1 | - | EQSMT 10 | - | - | EQ2SMT 10 | - |
| **DMT 400** | - | PT 55-75/8.6-13.5 | - | EQSMT 10 | - | - | EQ2SMT 10 | - |
| **DMT 560** | - | PT 55-75/8.6-13.5 | - | EQSMT 10 | - | - | EQ2SMT 10 | - |
| **DMT 1000** | - | PT 125-150/16-21 | - | EQSMT 10 | QST 10 | - | EQ2SMT 15 | Q2ST 10 |

# DM4

**Sewage**
Single-channel

Single-channel centrifugal drainage pumps: besides the high capacity they guarantee excellent head; ideal for civil and industrial applications; specifically designed for very heavy use; available in the mobile or permanent versions with coupling feet.

DMT 250-4
DMT 300-4
DMT 400-4

DMT 550-4
DMT 750-4

Grey water

Black water

## Construction features

| | |
|---|---|
| **Painting** | cataphoresis |
| **Pump body** | cast iron |
| **Impeller** | cast iron |
| **Mechanical seal** | double seal with oil barrier: silicon carbide on pump side, ceramic-graphite on motor side |
| **Motor shaft** | stainless steel AISI 304 |
| **Free passage** | Ø max 60 mm (DMT 250/4÷400/4)<br>Ø max 90 mm (DMT 550/4-750/4) |
| **Max submergence** | 20 m |
| **Liquid temperature** | 0 - 40 °C |
| **Cable** | H07 RN8F, 10 m |
| **Bolts** | A2 stainless steel |
| **Foot support** | galvanized iron |
| **Gaskets** | NBR rubber |

## Motor

| | |
|---|---|
| **4 poles induction motor** | 3~ 230V - 50Hz<br>3~ 400V - 50Hz<br>3~ 230/400V - 50Hz<br>3~ 400/690V - 50Hz |
| **Insulation class** | F |
| **Protection degree** | IPX8 |

| LOTS | | | | |
|---|---|---|---|---|
| TYPE | TRUCK | | CONTAINER | |
| | PALLET (cm) | N° pumps | PALLET (cm) | N° pumps |
| **DMT 250-4÷750-4** | 85×110×190 | 12 | 100×120×190 | 12 |

**DM T 550 - 4 -CF**

- pump type: DM
- motor: T 3~
- poles: 4
- counter-flange: not included / CF included

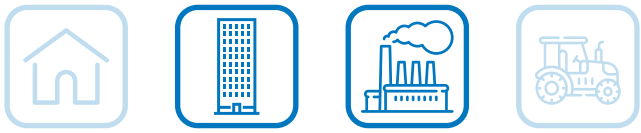

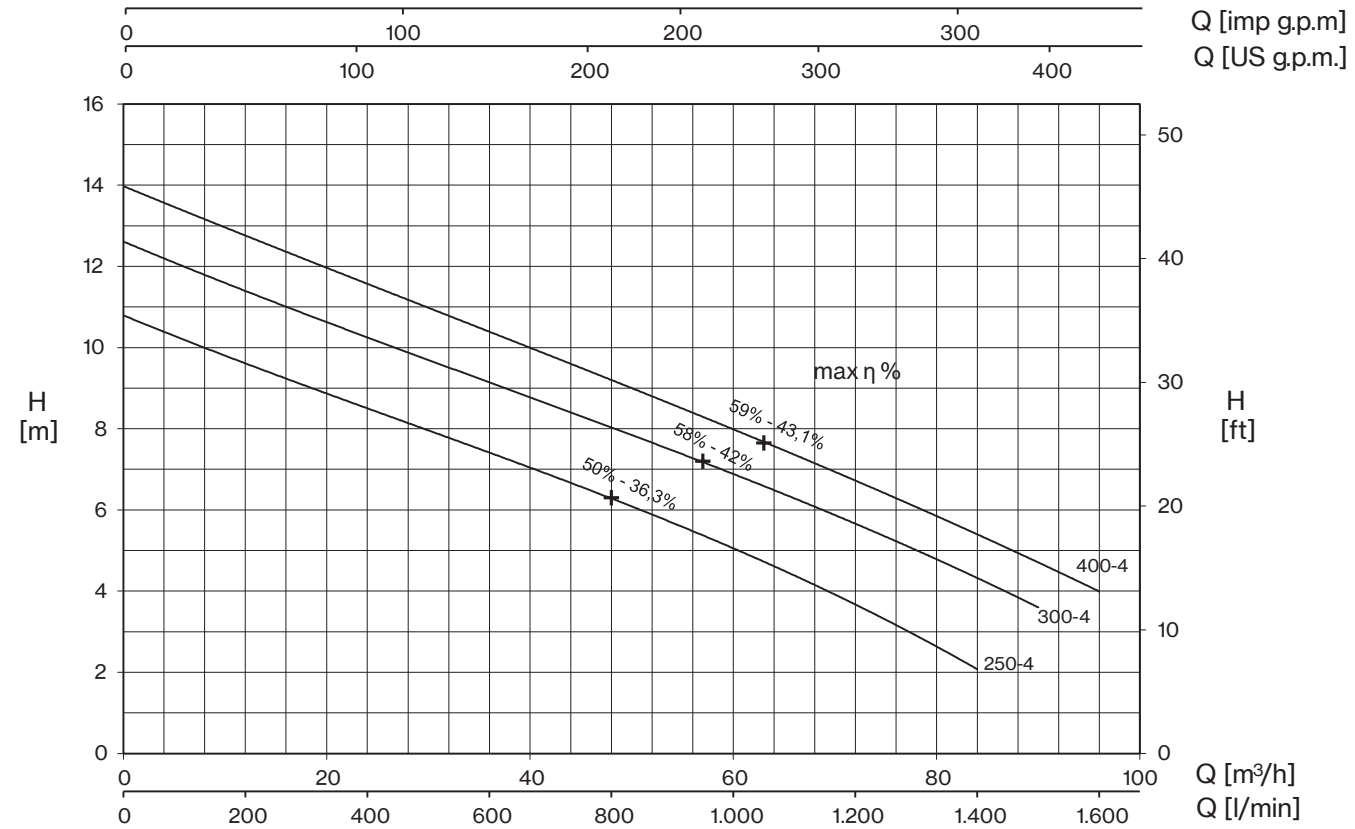


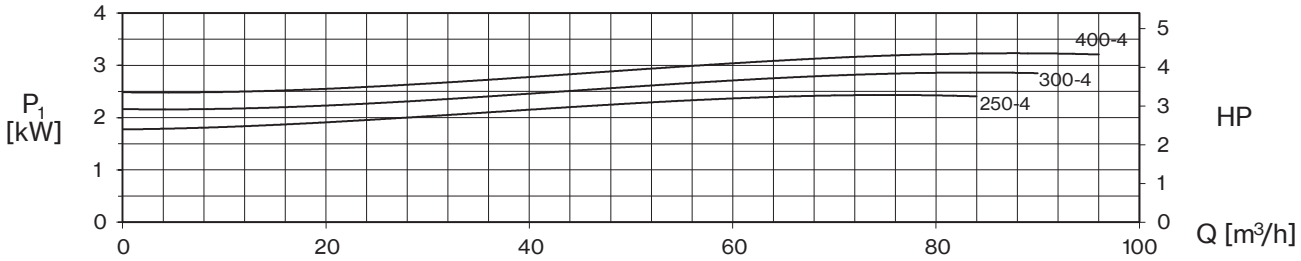


| TYPE - 50 Hz | CURRENT | | | |
|---|---|---|---|---|
| 3~ | 3~ 230V (*) | 3~ 400V | 230/400 V ⅄ / △ (*) | 400/690 V ⅄ / △ |
| **DMT 250-4** | 7,8 | 4,5 | - | - |
| **DMT 300-4** | 9 | 5,2 | - | - |
| **DMT 400-4** | 11,2 | 6,5 | - | - |

(*) no standard execution

+ max η %

max hydraulic efficiency and respective total efficiency

| TYPE - 50 Hz | P2 | | P1 | Q (m³/h - l/min) | | | | | | | | | |
|---|---|---|---|---|---|---|---|---|---|---|---|---|---|
| 3~ | | | | 0 | 12 | 24 | 36 | 48 | 60 | 72 | 84 | 90 | 96 |
| | | | | 0 | 200 | 400 | 600 | 800 | 1000 | 1200 | 1400 | 1500 | 1600 |
| | HP | kW | kW | H (m) | | | | | | | | | |
| **DMT 250-4** | 2,5 | 1,8 | 2,4 | 10,8 | 9,6 | 8,5 | 7,4 | 6,3 | 5,1 | 3,6 | 2,1 | | |
| **DMT 300-4** | 3 | 2,2 | 2,9 | 12,6 | 11,4 | 10,3 | 9,1 | 8,0 | 6,9 | 5,7 | 4,3 | 3,6 | |
| **DMT 400-4** | 4 | 3 | 3,2 | 14,0 | 12,7 | 11,6 | 10,4 | 9,2 | 8,0 | 6,7 | 5,4 | 4,7 | 4,0 |

# DM4

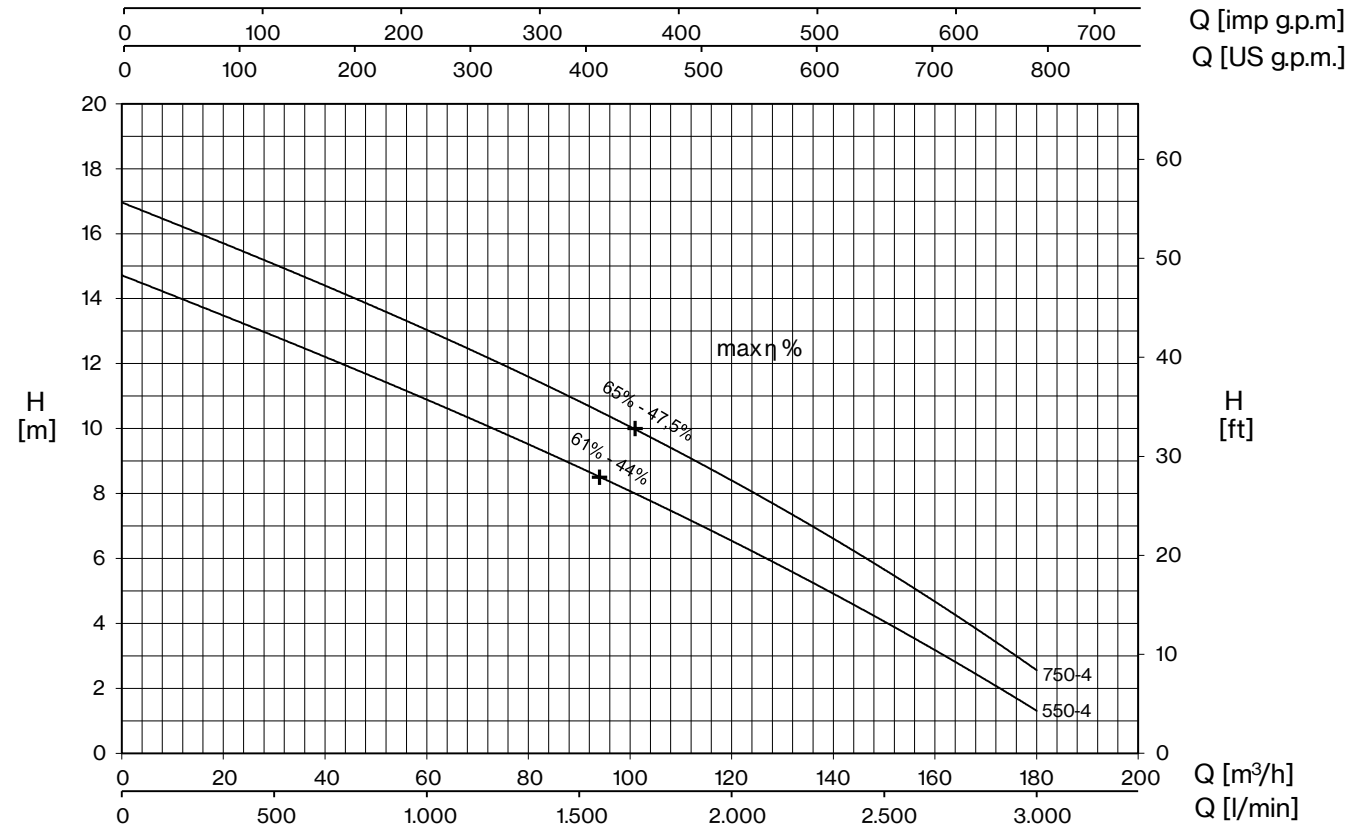


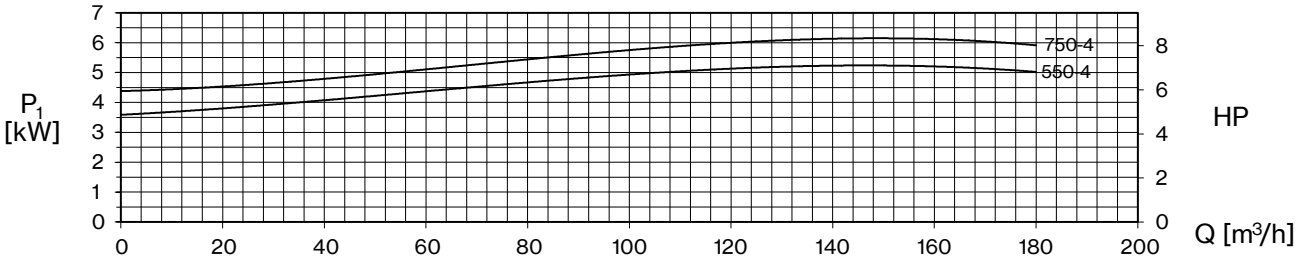


| TYPE - 50 Hz | CURRENT | | | |
|---|---|---|---|---|
| 3~ | 3~ 230V (*) | 3~ 400V | 230/400V ⅄ / △ (*) | 400/690V ⅄ / △ |
| **DMT 550-4** | - | 9,4 | 16,3 | 9,4 |
| **DMT 750-4** | - | 11,8 | 20,4 | 11,8 |

(*) no standard execution

+ max η %

max hydraulic efficiency and respective total efficiency

| TYPE - 50 Hz | P2 | | P1 | Q (m³/h - l/min) | | | | | | | | | | | | | | | |
|---|---|---|---|---|---|---|---|---|---|---|---|---|---|---|---|---|---|---|---|
| 3~ | | | | 0 | 12 | 24 | 36 | 48 | 60 | 72 | 84 | 96 | 108 | 120 | 132 | 144 | 156 | 168 | 180 |
| | | | | 0 | 200 | 400 | 600 | 800 | 1000 | 1200 | 1400 | 1600 | 1800 | 2000 | 2200 | 2400 | 2600 | 2800 | 3000 |
| | HP | kW | kW | H (m) | | | | | | | | | | | | | | | |
| **DMT 550-4** | 5,5 | 4 | 5,2 | 14,7 | 14,0 | 13,2 | 12,5 | 11,7 | 10,9 | 10,1 | 9,2 | 8,3 | 7,5 | 6,5 | 5,6 | 4,6 | 3,6 | 2,4 | 1,3 |
| **DMT 750-4** | 7,5 | 5,5 | 6,1 | 17,0 | 16,2 | 15,4 | 14,7 | 13,8 | 13,0 | 12,2 | 11,4 | 10,4 | 9,4 | 8,4 | 7,3 | 6,2 | 5,1 | 3,8 | 2,6 |

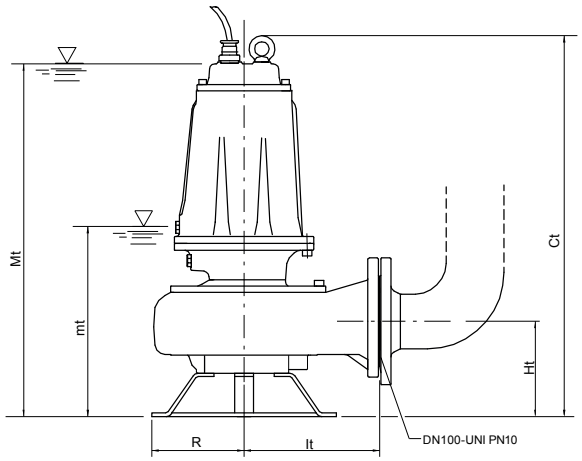


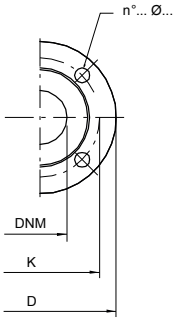


## ACCESSORIES

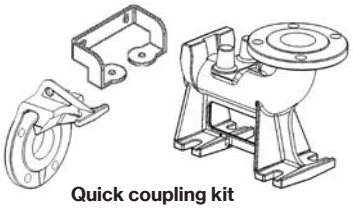

Quick coupling kit

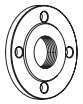

Counterflange

mt: minimum working level
Mt: minimum submengence level for continuos duty

| TYPE | DIMENSIONS (mm) | | | | | | | Kg |
|---|---|---|---|---|---|---|---|---|
| 3~ | Ct | Ht | R | It | mt | Mt | DNM | |
| **DMT 250-4** | 660 | 165 | 160 | 235 | 300 | 614 | 100 | 71,5 |
| **DMT 300-4** | 660 | 165 | 160 | 235 | 300 | 614 | 100 | 74 |
| **DMT 400-4** | 660 | 165 | 160 | 235 | 300 | 614 | 100 | 77,5 |
| **DMT 550-4** | 715 | 195 | 180 | 276 | 385 | 695 | 100 | 104 |
| **DMT 750-4** | 715 | 195 | 180 | 276 | 385 | 695 | 100 | 107,5 |

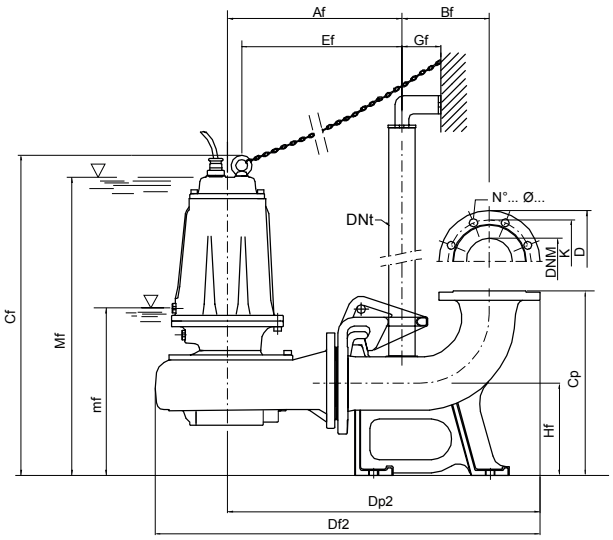


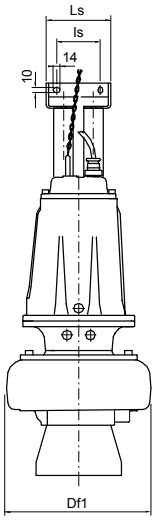


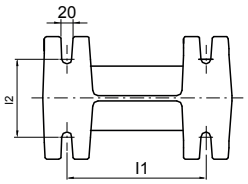


mf: minimum working level
Mf: minimum submengence level for continuos duty

| TYPE | DIMENSIONS (mm) | | | | | | | | | | | | | | | | | |
|---|---|---|---|---|---|---|---|---|---|---|---|---|---|---|---|---|---|---|
| 3~ | Af | Bf | Cf | Cp | Df1 | Df2 | Dp2 | DNt | Ef | Gf | Hf | l1 | l2 | ls | Ls | mf | Mf | DNM |
| **DMT 250-4/P** | 378 | 190 | 695 | 400 | 317 | 835 | 678 | 2” | 347 | 85 | 200 | 250 | 140 | 130 | 180 | 335 | 650 | 100 |
| **DMT 300-4/P** | 378 | 190 | 695 | 400 | 317 | 835 | 678 | 2” | 347 | 85 | 200 | 250 | 140 | 130 | 180 | 335 | 650 | 100 |
| **DMT 400-4/P** | 378 | 190 | 695 | 400 | 317 | 835 | 678 | 2” | 347 | 85 | 200 | 250 | 140 | 130 | 180 | 335 | 650 | 100 |
| **DMT 550-4/P** | 419 | 190 | 755 | 400 | 371 | 900 | 719 | 2” | 384 | 85 | 200 | 250 | 140 | 130 | 180 | 390 | 700 | 100 |
| **DMT 750-4/P** | 419 | 190 | 755 | 400 | 371 | 900 | 719 | 2” | 384 | 85 | 200 | 250 | 140 | 130 | 180 | 390 | 700 | 100 |

| Flange UNI PN 10 (mm) | | | |
|---|---|---|---|
| DNM | K | D | n°... ø... |
| 100 | 180 | 220 | 8... 18... |

| TYPE | PROTECTION | 1 PUMP CONTROL PANEL | | 2 PUMPS CONTROL PANEL | |
|---|---|---|---|---|---|
| | 3~ 400V | 3~ 400V | 400/690 V | 3~ 400V | 400/690 V |
| **DMT 250-4** | PT 40-50/5.7-9.1 | EQSMT 10 | - | EQ2SMT 10 | - |
| **DMT 300-4** | PT 40-50/5.7-9.1 | EQSMT 10 | - | EQ2SMT 10 | - |
| **DMT 400-4** | PT 40-50/5.7-9.1 | EQSMT 10 | - | EQ2SMT 10 | - |
| **DMT 550-4** | PT 55-75/8.6-13.5 | EQSMT 10 | - | EQ2SMT 10 | - |
| **DMT 750-4** | PT 100/12.5-16.5 | EQSMT 10 | QST 5 | EQ2SMT 10 | Q2ST 5 |

# DTR 101

**Sewage**
Grinder

Drainage pumps with open impeller characterized by head in ratio to the type and size of the machine. The grinder allows to pumps sewage containing textile or filamentous fibres have to be crushed. The single-phase version includes a built-in capacitor, a thermal protector and it can be equipped with a float switch.

Grey water

Black water

## Construction features

| | |
|---|---|
| **Painting** | cataphoresis |
| **Pump body** | cast iron |
| **Shell, motor cover** | stainless steel |
| **Impeller** | brass |
| **Mechanical seal** | double seal with oil barrier: silicon carbide on pump side, sealing ring on motor side |
| **Motor shaft** | stainless steel AISI 430 |
| **Grinder** | treated stainless steel |
| **Max submergence** | 5 m |
| **Liquid temperature** | 0 - 40 °C |
| **Cable** | H07 RN8F, 10 m |
| **G** | float switch |

## Motor

| | |
|---|---|
| **2 poles induction motor** | 3~ 400V - 50Hz<br>1~ 230V - 50Hz<br>(with thermal protection) |
| **Insulation class** | F |
| **Protection degree** | IPX8 |

| LOTS | | | | |
|---|---|---|---|---|
| TYPE | TRUCK | | CONTAINER | |
| | PALLET (cm) | N° pumps | PALLET (cm) | N° pumps |
| **DTR(T) 101** | 80×120×150 | 57 | 80×120×195 | 76 |
| | | | 80×110×195 | 72 |

**DTR** [ ] **101 G**
- [ ] without float switch
- **G** with float switch
- motor [ ] 1~ **T** 3~
- pump type

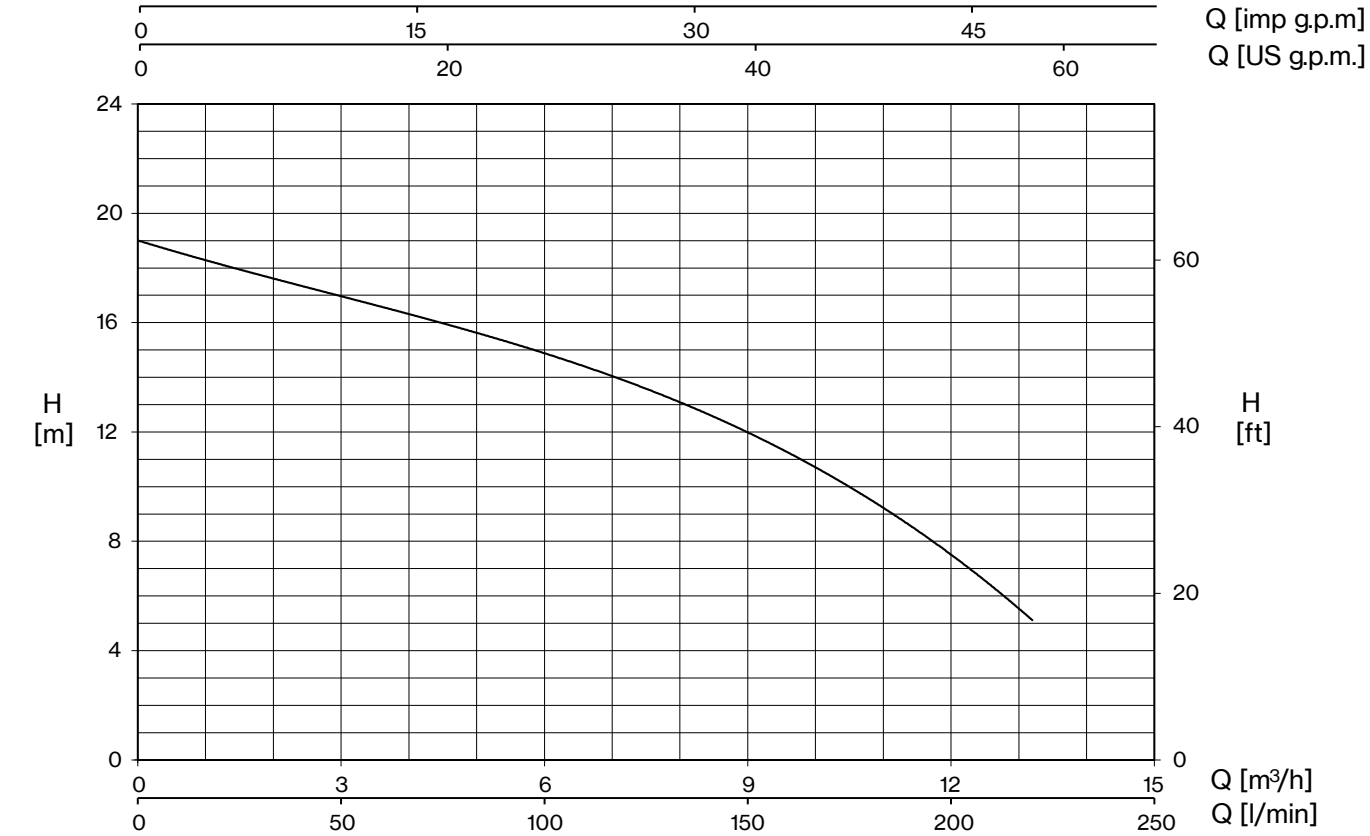


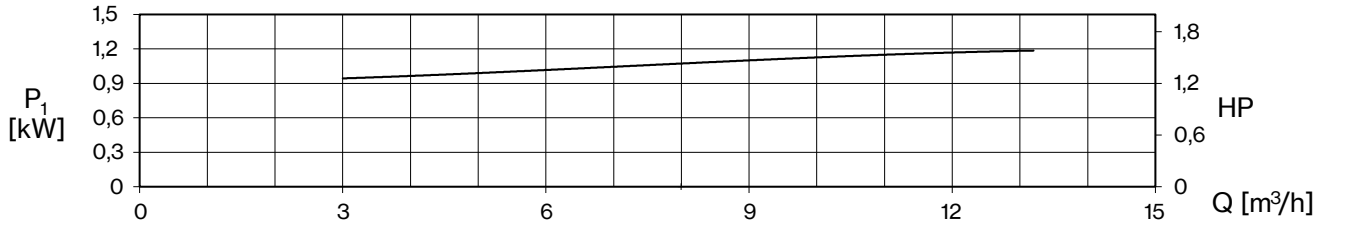


| TYPE - 50 Hz | | P1 | CURRENT | | Q (m³/h - l/min) | | | | | |
|---|---|---|---|---|---|---|---|---|---|---|
| 1~ | 3~ | | 1~ 230V | 3~ 400V | 0 | 3 | 6 | 9 | 12 | 13,2 |
| | | | | | 0 | 50 | 100 | 150 | 200 | 220 |
| | | kW | A | | H (m) | | | | | |
| **DTR 101 (G)** | **DTRT 101** | 1,2 | 5,3 | 2,2 | 19,0 | 17,1 | 14,8 | 11,9 | 7,8 | 4,9 |

E: maximum emptying level
Mt: minimum liquid level for continuos duty

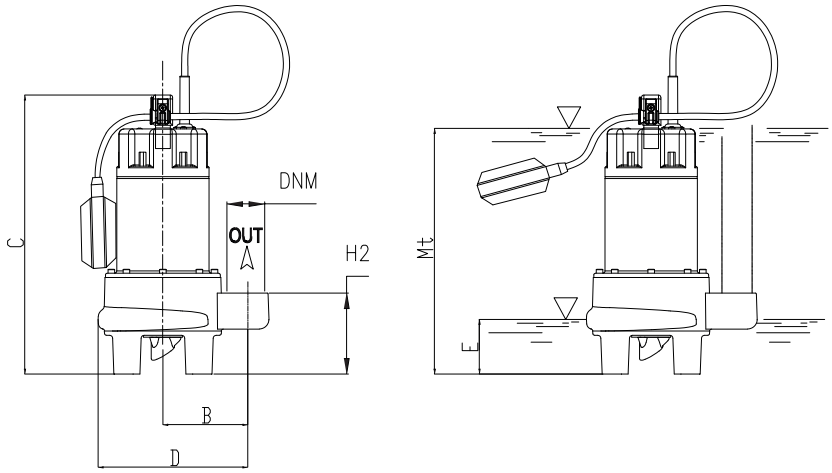


| TYPE | | DIMENSIONS (mm) | | | | | | | | | | Kg |
|---|---|---|---|---|---|---|---|---|---|---|---|---|
| 1~ | 3~ | B | C | D | E | H2 | Mt | DNM | I | L | M | |
| **DTR 101 (G)** | **DTRT 101** | 105 | 369 | 288 | 84 | 104,5 | 316 | 1" ½ G | 260 | 185 | 450 | 16,5 |

# DTR/DTRT

**Sewage**
Grinder

DTR 150-300 | DTRT 400-1000 | DTRT 400-1000/P

Drainage and waste water pumps equipped with open impeller and grinder system able to shred sewage with suspended solids and prevent the pump from clogging. Best for emptying of septic tanks and residential sumps as well as for rain water systems and for draining of flooded areas where seamless operation is required. The quick coupling feet DN50 and DN65 is available for flanged pumps.

Grey water

Black water

## Construction features

| | |
|---|---|
| **Painting** | cataphoresis |
| **Pump body** | cast iron |
| **Impeller** | cast iron |
| **Mechanical seal** | double seal with oil barrier: silicon carbide on pump side, ceramic-graphite on motor side |
| **Motor shaft** | stainless steel AISI 304 |
| **Max submergence** | 20 m |
| **Liquid temperature** | 0 - 40 °C |
| **Grinder** | treated stainless steel |
| **Bolts** | A2 stainless steel |
| **Foot support** | galvanized iron |
| **Gaskets** | NBR rubber |

## Motor

| | |
|---|---|
| **2 Poles induction motor** | 3~ 230V - 50Hz<br>3~ 400V - 50Hz<br>3~ 230/400V - 50Hz<br>3~ 400/690V - 50Hz<br><br>1~ 230V - 50Hz<br>required run capacitor (35µF for 1,5HP models, 50µF for 2HP model) + start capacitor (80µF with disjuntor) |
| **Insulation class** | F |
| **Protection degree** | IPX8 |

**DTR** [ ] **150** **-CF** — counter-flange: [ ] not included, **CF** included

[ ] motor: [ ] 1~, **T** 3~

pump type

| LOTS | | | | |
|---|---|---|---|---|
| TYPE | TRUCK | | CONTAINER | |
| | PALLET (cm) | N° pumps | PALLET (cm) | N° pumps |
| **DTR(T) 150÷300** | 85×110×145 | 18 | 85×110×190 | 27 |
| **DTRT 400-550** | 85×110×170 | 12 | 85×110×170 | 12 |
| **DTRT 750-1000** | 100×120×190 | 12 | 100×120×190 | 12 |

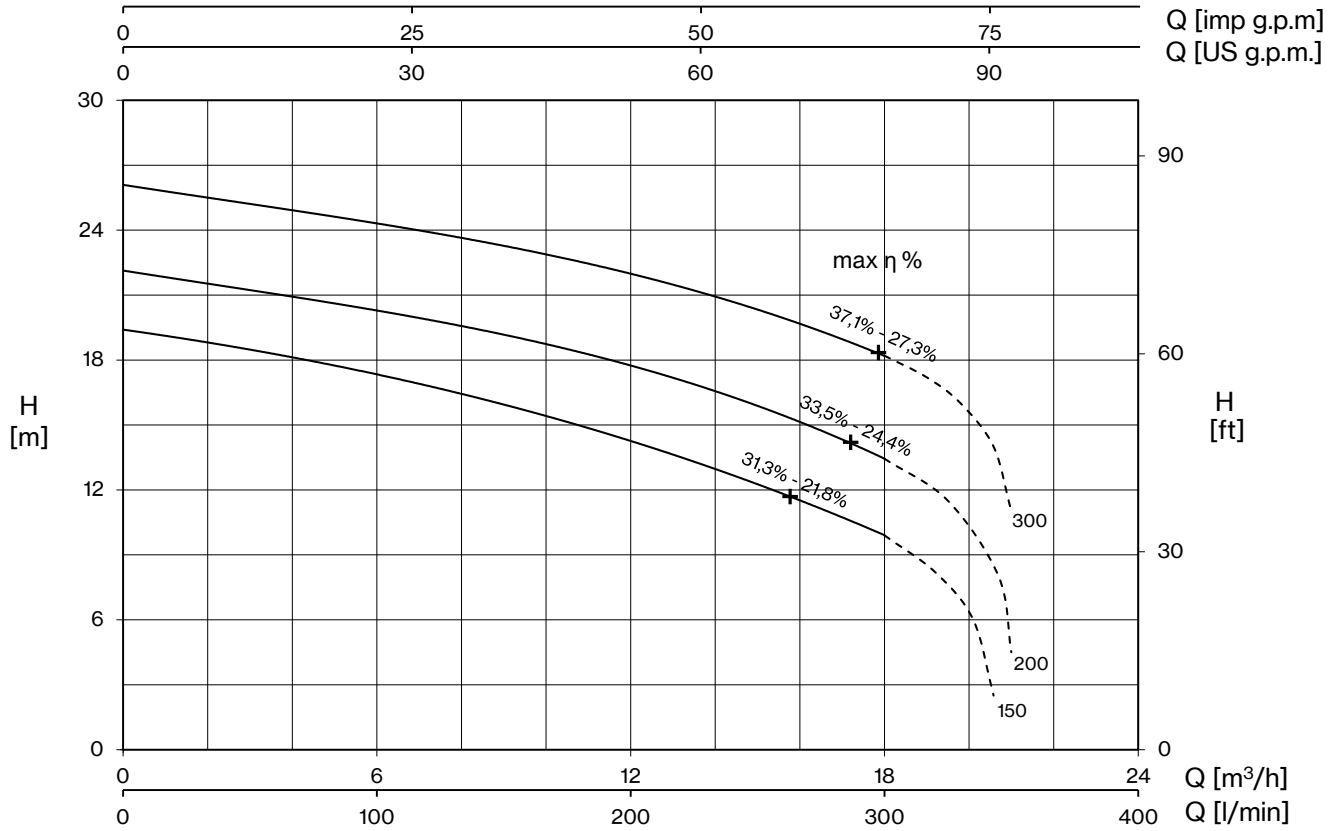


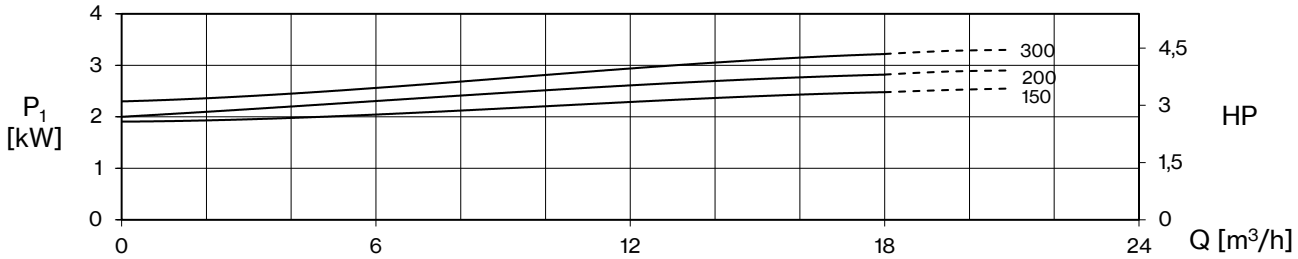


| TYPE - 50 Hz | | CURRENT | | | | |
|---|---|---|---|---|---|---|
| 1~ | 3~ | 230 V | 3~ 230V (*) | 3~ 400V | 230/400 V ⅄ / △ (*) | 400/690 V ⅄ / △ |
| **DTR 150** | **DTRT 150** | 11,5 | 7,6 | 4,4 | - | - |
| **DTR 200** | **DTRT 200** | 13,6 | 8,8 | 5,1 | - | - |
| **-** | **DTRT 300** | - | 10,0 | 5,8 | - | - |

(*) no standard execution

+ max η %

max hydraulic efficiency and respective total efficiency

| TYPE - 50 Hz | | P2 | | P1 | | Q (m³/h - l/min) | | | | | | | |
|---|---|---|---|---|---|---|---|---|---|---|---|---|---|
| 1~ | 3~ | | | 1~ | 3~ | 0 | 3 | 6 | 9 | 12 | 13,2 | 15 | 18 |
| | | | | | | 0 | 50 | 100 | 150 | 200 | 220 | 250 | 300 |
| | | HP | kW | kW | | H (m) | | | | | | | |
| **DTR 150** | **DTRT 150** | 1,5 | 1,1 | 2,6 | 2,5 | 19,4 | 18,5 | 17,3 | 16,0 | 14,2 | 13,5 | 12,3 | 9,9 |
| **DTR 200** | **DTRT 200** | 2 | 1,5 | 3 | 2,8 | 22,1 | 21,3 | 20,3 | 19,1 | 17,7 | 17,1 | 16 | 13,4 |
| **-** | **DTRT 300** | 3 | 2,2 | - | 3,2 | 26,1 | 25,2 | 24,3 | 23,3 | 22 | 21,4 | 20,3 | 18,2 |

# DTR/DTRT

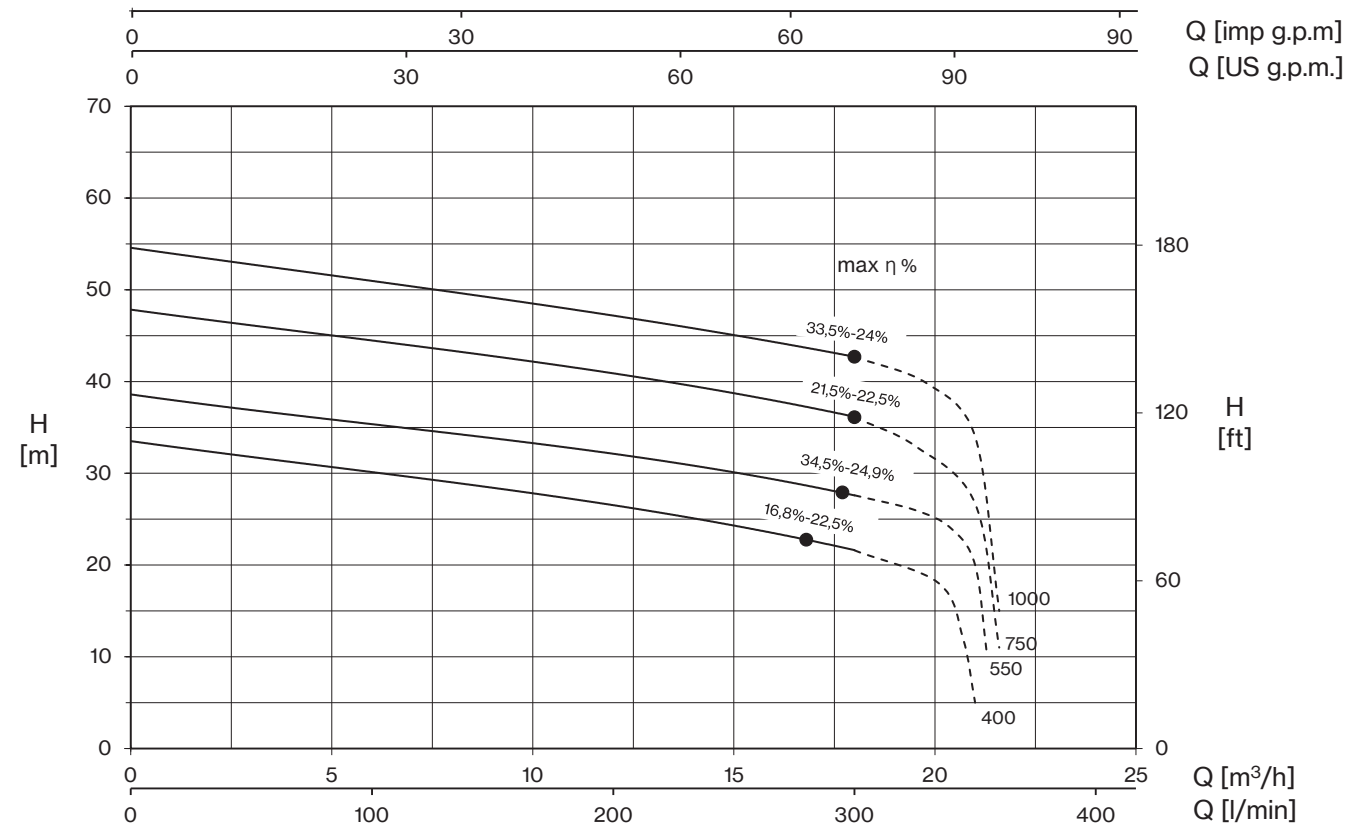


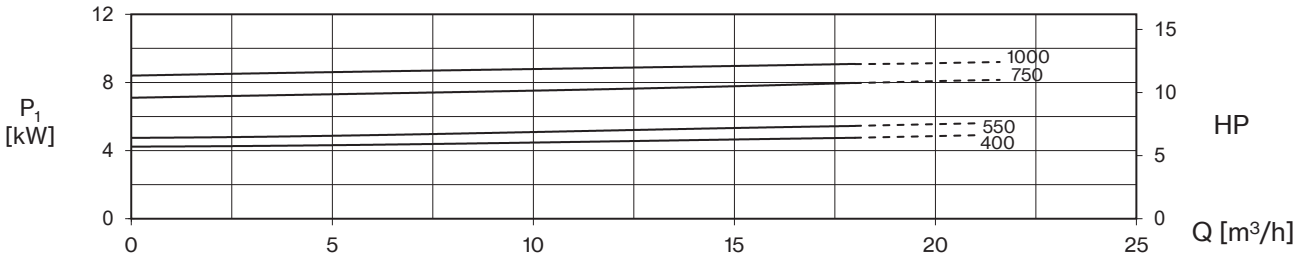


| TYPE - 50 Hz | CURRENT | | | |
|---|---|---|---|---|
| 3~ | 3~ 230V (*) | 3~ 400V | 230/400V ⅄ / △ (*) | 400/690V ⅄ / △ |
| **DTRT 400** | 13,0 | 7,5 | - | - |
| **DTRT 550** | 15,9 | 9,2 | - | - |
| **DTRT 750** | - | 13,9 | 24 | 13,9 |
| **DTRT 1000** | - | 15,5 | 26,8 | 15,5 |

(*) no standard execution

## + max η %

max hydraulic efficiency and respective total efficiency

| TYPE - 50 Hz | P2 | | P1 | Q (m³/h - l/min) | | | | | | |
|---|---|---|---|---|---|---|---|---|---|---|
| 3~ | | | | 0 | 3 | 6 | 9 | 12 | 15 | 18 |
| | | | | 0 | 50 | 100 | 150 | 200 | 250 | 300 |
| | HP | kW | kW | H (m) | | | | | | |
| **DTRT 400** | 4 | 3 | 4,5 | 33,5 | 31,8 | 30,1 | 28,5 | 26,4 | 24,4 | 21,6 |
| **DTRT 550** | 5,5 | 4 | 5,3 | 38,6 | 36,9 | 35,3 | 33,9 | 32,1 | 30,1 | 27,6 |
| **DTRT 750** | 7,5 | 5,5 | 8,0 | 47,8 | 46,2 | 44,5 | 42,7 | 40,8 | 38,9 | 36,1 |
| **DTRT 1000** | 10 | 7,5 | 9,1 | 54,6 | 52,7 | 51,0 | 49,2 | 47,1 | 45,1 | 42,7 |

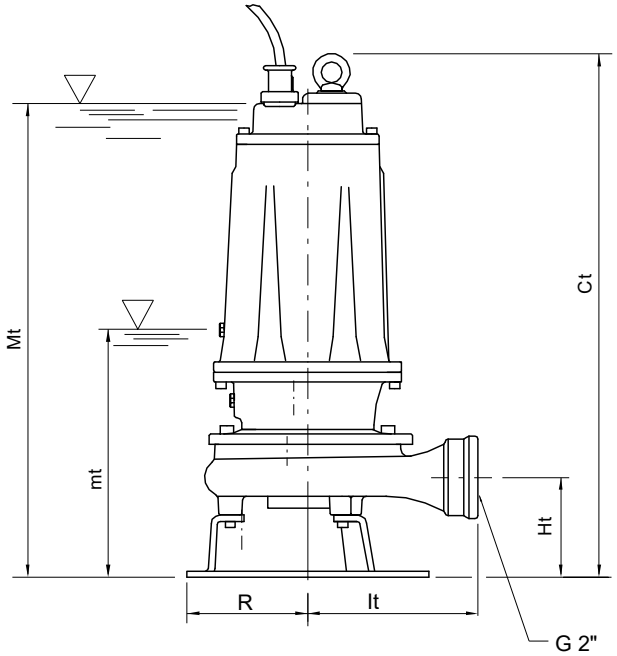


## ACCESSORIES

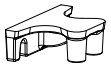

**Quick coupling kit**

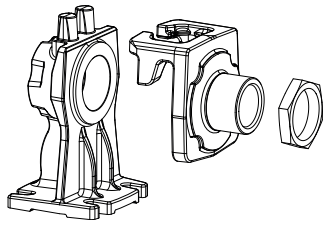

mt: minimum working level
Mt: minimum submengence level for continuos duty

| TYPE | | DIMENSIONS (mm) | | | | | | | Kg |
|---|---|---|---|---|---|---|---|---|---|
| 1~ | 3~ | Ct | Ht | R | It | mt | Mt | DNM | |
| **DTR 150** | **DTRT 150** | 513 | 102 | 117 | 174 | 205 | 475 | 2”G | 38 |
| **DTR 200** | **DTRT 200** | 513 | 102 | 117 | 174 | 205 | 475 | 2”G | 38,5 |
| **-** | **DTRT 300** | 513 | 102 | 117 | 174 | 205 | 475 | 2”G | 38 |

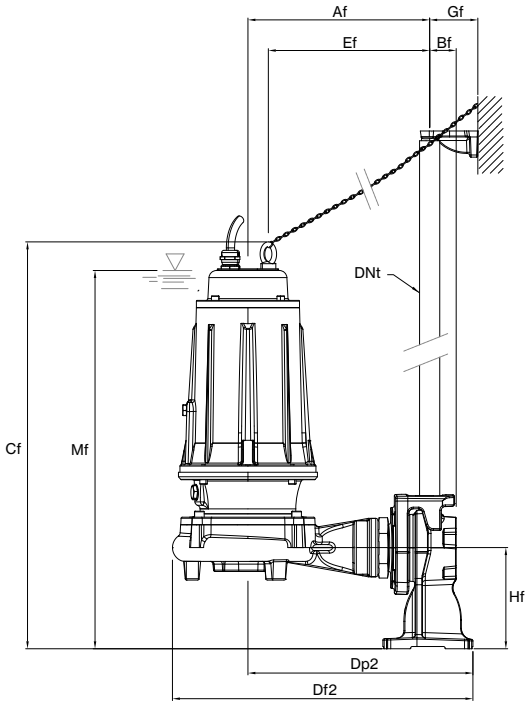


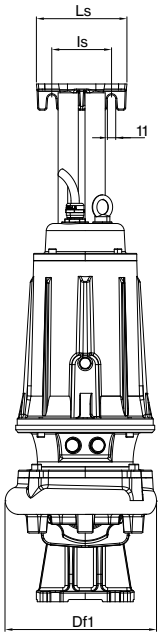


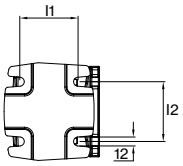


Mf: minimum submengence level for continuos duty

| TYPE | | DIMENSIONS (mm) | | | | | | | | | | | | | |
|---|---|---|---|---|---|---|---|---|---|---|---|---|---|---|---|
| 1~ | 3~ | Af | Bf | Cf | Df1 | Df2 | Dp2 | Ef | Gf | Hf | I1 | I2 | Is | Ls | Mf |
| **DTR 150** | **DTRT 150** | 243 | 36 | 545 | 203 | 402 | 301 | 216 | 65 | 135 | 78 | 80 | 80 | 121 | 506 |
| **DTR 200** | **DTRT 200** | 243 | 36 | 545 | 203 | 402 | 301 | 216 | 65 | 135 | 78 | 80 | 80 | 121 | 506 |
| **-** | **DTRT 300** | 243 | 36 | 545 | 203 | 402 | 301 | 216 | 65 | 135 | 78 | 80 | 80 | 121 | 506 |

# DTR/DTRT

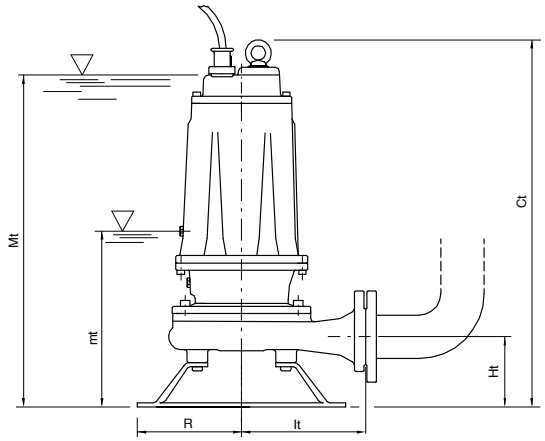


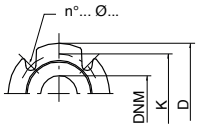


## ACCESSORIES

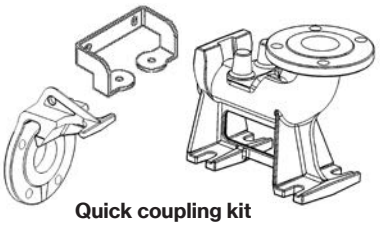

**Quick coupling kit**

**Counterflange**

mt: minimum working level
Mt: minimum submengence level for continuos duty

| TYPE | DIMENSIONS (mm) | | | | | | | Kg |
|---|---|---|---|---|---|---|---|---|
| 3~ | Ct | Ht | R | It | mt | Mt | DNM | |
| **DTRT 400** | 595 | 112 | 160 | 190 | 265 | 550 | 50 | 62,5 |
| **DTRT 550** | 595 | 112 | 160 | 190 | 265 | 550 | 50 | 65,5 |
| **DTRT 750** | 680 | 160 | 180 | 250 | 280 | 630 | 65 | 91,5 |
| **DTRT 1000** | 680 | 160 | 180 | 250 | 280 | 630 | 65 | 94,5 |

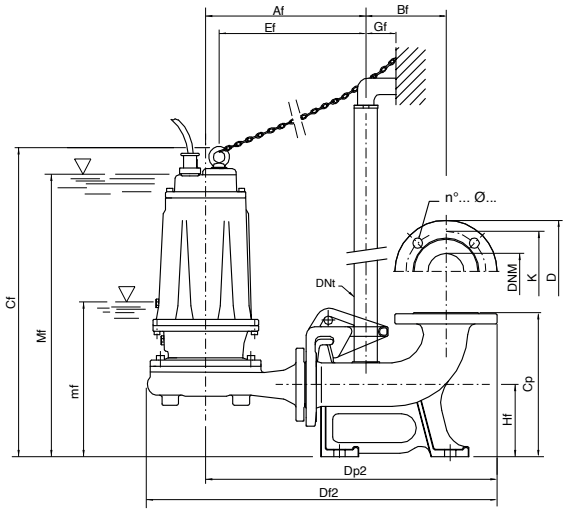


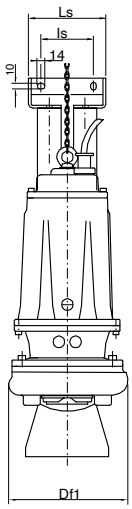


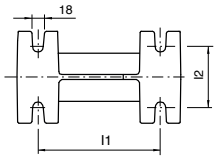


mf: minimum working level
Mf: minimum submengence level for continuos duty

| Flange UNI PN 10 (mm) | | | |
|---|---|---|---|
| DNM | K | D | n°... ø... |
| 50 | 125 | 165 | 4... 18... |
| 65 | 145 | 185 | 4... 18... |

| TYPE | DIMENSIONS (mm) | | | | | | | | | | | | | | | | | |
|---|---|---|---|---|---|---|---|---|---|---|---|---|---|---|---|---|---|---|
| 3~ | Af | Bf | Cf | Cp | Df1 | Df2 | Dp2 | DNt | Ef | Gf | Hf | l1 | l2 | Is | Ls | mf | Mf | DNM |
| **DTRT 400/P** | 300 | 145 | 614 | 260 | 237 | 654 | 538 | 1" 1¼ | 269 | 55 | 130 | 200 | 100 | 95 | 140 | 290 | 566 | 50 |
| **DTRT 550/P** | 300 | 145 | 614 | 260 | 237 | 654 | 538 | 1" ¼ | 269 | 55 | 130 | 200 | 100 | 95 | 140 | 290 | 566 | 50 |
| **DTRT 750/P** | 331 | 145 | 656 | 260 | 279 | 710 | 569 | 1" ¼ | 297 | 55 | 130 | 200 | 100 | 95 | 140 | 290 | 600 | 65 |
| **DTRT 1000/P** | 331 | 145 | 656 | 260 | 279 | 710 | 569 | 1" ¼ | 297 | 55 | 130 | 250 | 100 | 95 | 140 | 290 | 600 | 65 |

| TYPE | PROTECTION | | 1 PUMP CONTROL PANEL | | | 2 PUMPS CONTROL PANEL | | |
|---|---|---|---|---|---|---|---|---|
| | 1~ 230V | 3~ 400V | 1~ 230V | 3~ 400V | 400/690 V | 1~ 230V | 3~ 400V | 400/690 V |
| **DTR 150** | PMLD 15/35-13 | PT 20-30-40/4.3-6.8 | EQSM + 35μF + 80μF* | EQSMT 10 | - | EQ2SM + 2×35μF + 2×80μF* | EQ2SMT 10 | - |
| **DTR 200** | PMLD 20/50-15 | PT 20-30-40/4.3-6.8 | EQSM + 50μF + 80μF* | EQSMT 10 | - | EQ2SM + 2×50μF + 2×80μF* | EQ2SMT 10 | - |
| **DTRT 300** | - | PT 20-30-40/4.3-6.8 | - | EQSMT 10 | - | - | EQ2SMT 10 | - |
| **DTRT 400** | - | PT 40-50/5.7-9.1 | - | EQSMT 10 | - | - | EQ2SMT 10 | - |
| **DTRT 550** | - | PT 55-75/8.6-13.5 | - | EQSMT 10 | - | - | EQ2SMT 10 | - |
| **DTRT 750** | - | PT 100/12.5-16.5 | - | EQSMT 10 | QST 7 | - | EQ2SMT 10 | Q2ST 7 |
| **DTRT 1000** | - | PT 125-150/16-21 | - | EQSMT 10 | QST 10 | - | EQ2SMT 15 | Q2ST 10 |

**start capacitor with disjuntor*

# DG

DG 80-102

DG 150

Drainage pumps with set-back Vortex type impeller for pumping sewage waters and liquids with suspended solids; ideal for civil and household applications. The single-phase version includes a built-in capacitor, a thermal protector and it can be equipped with a float switch.

DG 80-102

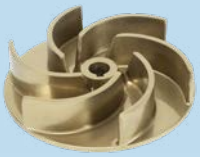
DG 150

Grey water

Black water

## Construction features

| | |
|---|---|
| **Painting** | cataphoresis |
| **Pump body** | cast iron |
| **Shell, motor cover, base support** | stainless steel |
| **Impeller** | Vortex stainless steel (80÷102); brass (150) |
| **Mechanical seal** | double seal with oil barrier: pump side with silicon carbide mechanical seal; motor side with sealing ring (80÷102) or ceramic-graphite mechanical seal (150) |
| **Motor shaft** | stainless steel AISI 430 |
| **Free passage** | Ø max 35 mm (80-100)<br>Ø max 50 mm (82÷150) |
| **Max submergence** | 5 m |
| **Liquid temperature** | 0 - 40 °C |
| **Cable** | H07 RN8F, 10 m |
| **G** | float switch |

## Motor

| | |
|---|---|
| **2 poles induction motor** | 3~ 400V - 50Hz<br>1~ 230V - 50Hz<br>(with thermal protection) |
| **Insulation class** | F |
| **Protection degree** | IPX8 |

| LOTS | | | | |
|---|---|---|---|---|
| TYPE | TRUCK | | CONTAINER | |
| | PALLET (cm) | N° pumps | PALLET (cm) | N° pumps |
| **DG(T) 80÷100** | 80×120×150 | 57 | 80×110×195 | 72 |
| | | | 80×120×195 | 76 |
| **DG(T) 82** | 80×120×160 | 48 | 80×120×200 | 64 |
| **DG(T) 150** | 80×120×160 | 51 | 80×120×200 | 64 |

**DG** ☐ **80** ☐ **G**

- ☐ without float switch
- **G** with float switch
- delivery port size ☐ standard
- **/2** larger
- motor ☐ 1~ **T** 3~
- pump type

# DG

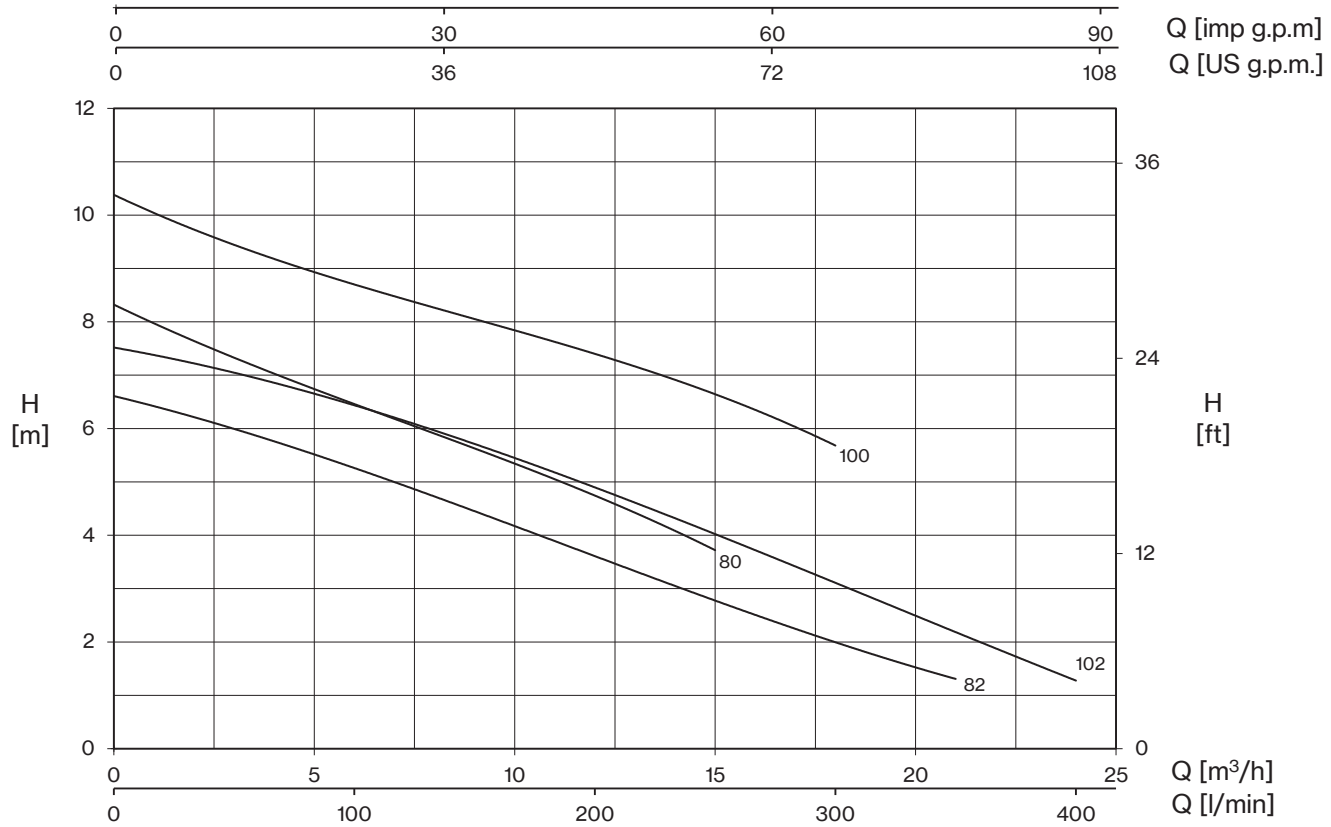


| TYPE - 50 Hz | | P1 | CURRENT | | Q (m³/h - l/min) | | | | | | | | |
|---|---|---|---|---|---|---|---|---|---|---|---|---|---|
| 1~ | 3~ | | 1~ 230V | 3~ 400V | 0 | 3 | 6 | 9 | 12 | 15 | 18 | 21 | 24 |
| | | | | | 0 | 50 | 100 | 150 | 200 | 250 | 300 | 350 | 400 |
| | | kW | A | | H (m) | | | | | | | | |
| **DG 80 (G)** | **DGT 80** | 1,05 | 4,7 | 2,2 | 8,3 | 7,4 | 6,4 | 5,6 | 4,8 | 3,7 | | | |
| **DG 80/2 (G)** | **DGT 80/2** | 1,05 | 4,7 | 2,2 | 8,3 | 7,4 | 6,4 | 5,6 | 4,8 | 3,7 | | | |
| **DG 100 (G)** | **DGT 100** | 1,35 | 6,2 | 2,8 | 10,4 | 9,4 | 8,7 | 8,1 | 7,4 | 6,6 | 5,7 | | |
| **DG 100/2 (G)** | **DGT 100/2** | 1,35 | 6,2 | 2,8 | 10,4 | 9,4 | 8,7 | 8,1 | 7,4 | 6,6 | 5,7 | | |
| **DG 82 (G)** | **DGT 82** | 1 | 4,5 | 2,1 | 6,6 | 6,0 | 5,3 | 4,4 | 3,6 | 2,8 | 2,0 | 1,3 | |
| **DG 102 (G)** | **DGT 102** | 1,2 | 5,3 | 2,4 | 7,5 | 7,1 | 6,4 | 5,7 | 4,9 | 4,0 | 3,2 | 2,1 | 1,3 |

E: maximum emptying level
Mt: minimum liquid level for continuos duty

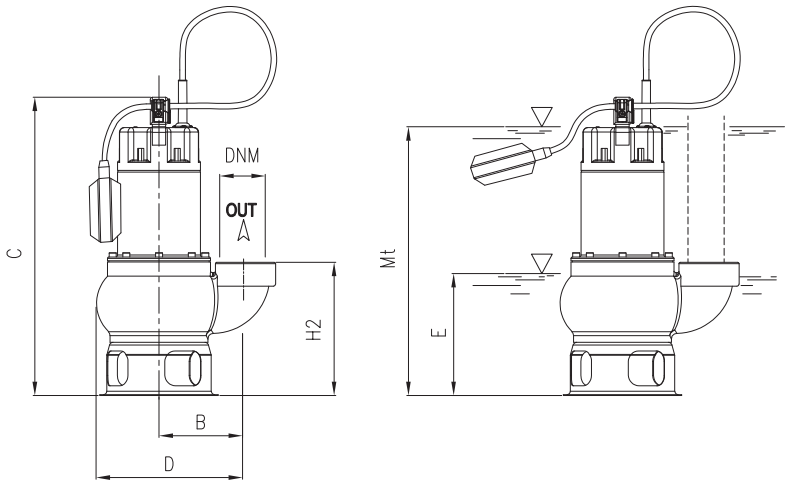


| TYPE | | DIMENSIONS (mm) | | | | | | | | | | Kg |
|---|---|---|---|---|---|---|---|---|---|---|---|---|
| 1~ | 3~ | B | C | D | E | H2 | Mt | DNM | I | L | M | |
| **DG 80 (G)** | **DGT 80** | 115 | 421 | 199 | 155 | 174 | 370 | 1”1/2 G | 250 | 183 | 448 | 13,5 |
| **DG 80/2 (G)** | **DGT 80/2** | 115 | 421 | 199 | 155 | 174 | 370 | 2” G | 250 | 183 | 448 | 14 |
| **DG 100 (G)** | **DGT 100** | 115 | 421 | 199 | 155 | 174 | 370 | 1”1/2 G | 250 | 183 | 448 | 15,5 |
| **DG 100/2 (G)** | **DGT 100/2** | 115 | 421 | 199 | 155 | 174 | 370 | 2” G | 250 | 183 | 448 | 15,5 |
| **DG 82 (G)** | **DGT 82** | 120 | 437 | 210 | 171 | 190 | 386 | 2” G | 264 | 203 | 482 | 15 |
| **DG 102 (G)** | **DGT 102** | 120 | 437 | 210 | 171 | 190 | 386 | 2” G | 264 | 203 | 482 | 16 |

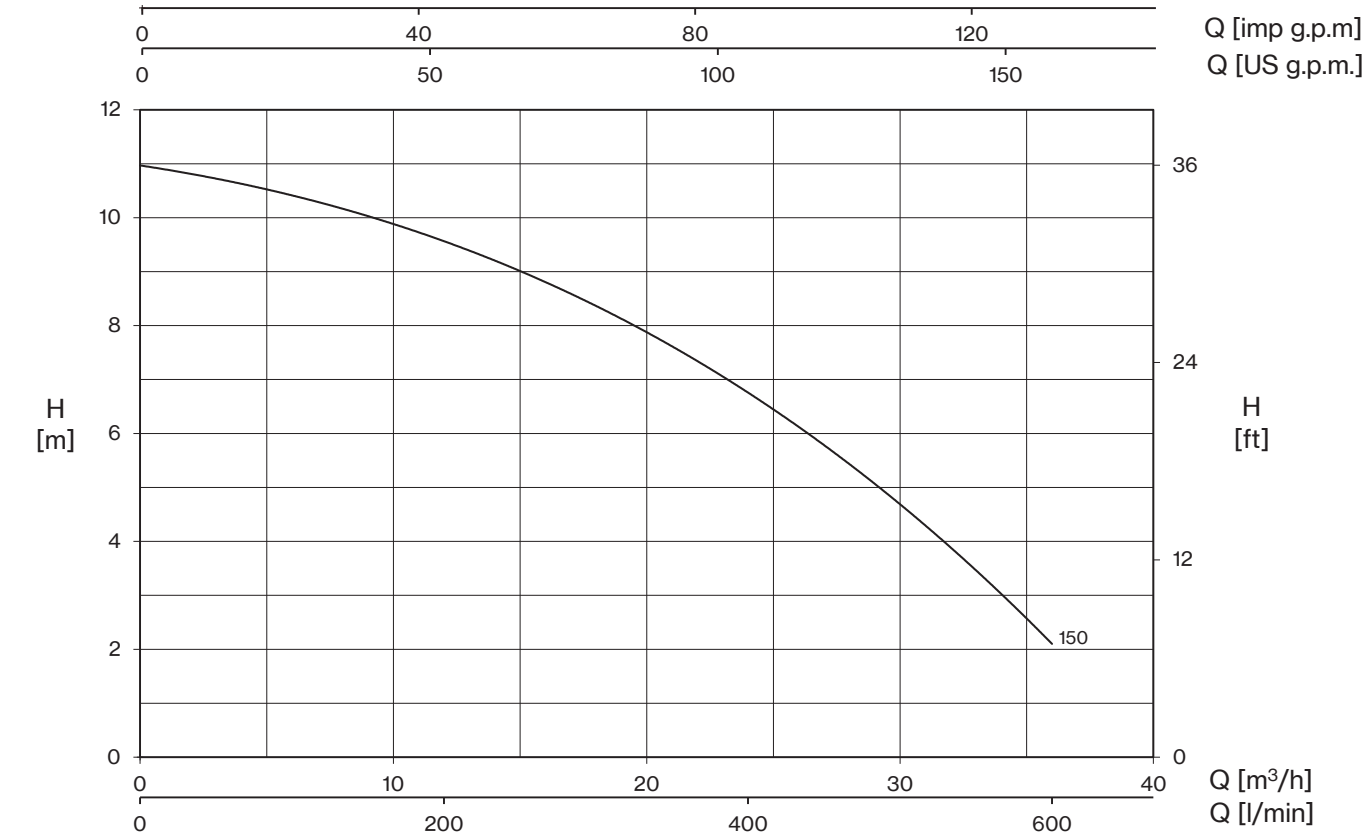


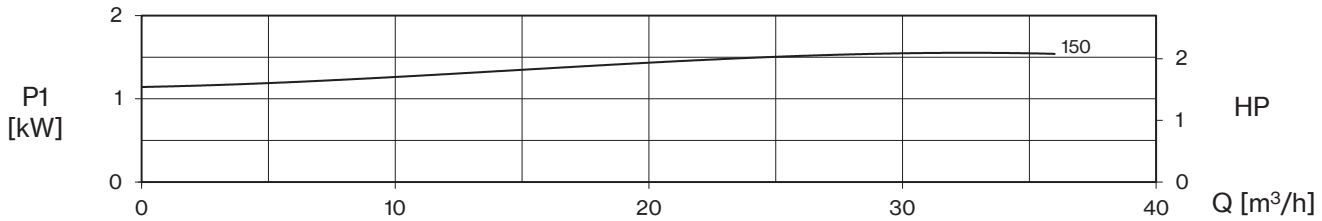


| TYPE - 50 Hz | | P1 | CURRENT | | Q (m³/h - l/min) | | | | | | |
|---|---|---|---|---|---|---|---|---|---|---|---|
| 1~ | 3~ | | 1~ 230V | 3~ 400V | 0 | 6 | 12 | 18 | 24 | 30 | 36 |
| | | | | | 0 | 100 | 200 | 300 | 400 | 500 | 600 |
| | | kW | A | | H (m) | | | | | | |
| **DG 150 (G)** | **DGT 150** | 1,55 | 7,1 | 2,9 | 11,0 | 10,4 | 9,6 | 8,3 | 6,8 | 4,6 | 2,1 |

E: maximum emptying level
Mt: minimum liquid level for continuos duty

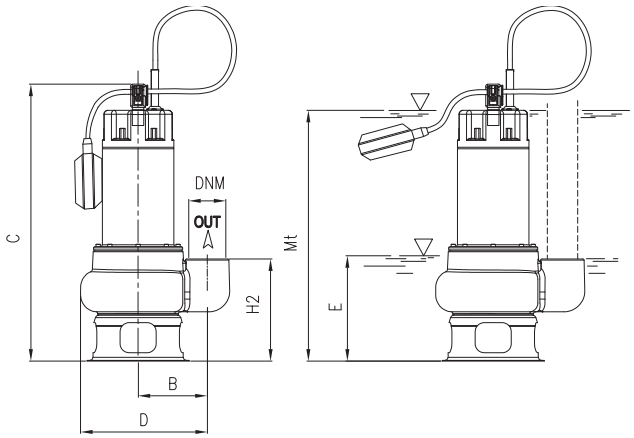


| TYPE | | DIMENSIONS (mm) | | | | | | | | | | Kg |
|---|---|---|---|---|---|---|---|---|---|---|---|---|
| 1~ | 3~ | B | C | D | E | H2 | Mt | DNM | I | L | M | |
| **DG 150 (G)** | **DGT 150** | 115 | 469 | 210 | 160 | 170 | 417 | 2” G | 200 | 260 | 470 | 19 |

# DX

Drainage pumps with set-back Vortex type impeller for pumping charged waters and liquids with suspended solids; ideal for civil and household applications. The single-phase version includes a built-in capacitor, a thermal protector and it can be equipped with a float switch.

Grey water

Black water

## Construction features

| | |
|---|---|
| **Pump body** | stainless steel with openings 1" ½ and 2" |
| **Shell, motor cover, base support** | stainless steel |
| **Impeller** | stainless steel Vortex type |
| **Mechanical seal** | double seal with oil barrier: silicon carbide on pump side, sealing ring on motor side |
| **Motor shaft** | stainless steel AISI 430 |
| **Free passage** | Ø max 28 mm |
| **Max submergence** | 5 m |
| **Liquid temperature** | 0 - 40 °C |
| **Cable** | H07 RN8F, 10 m |
| **G** | float switch |

## Motor

| | |
|---|---|
| **2 poles induction motor** | 3~ 400V - 50Hz<br>1~ 230V - 50Hz<br>(with thermal protection) |
| **Insulation class** | F |
| **Protection degree** | IPX8 |

| LOTS | | | | |
|---|---|---|---|---|
| TYPE | TRUCK | | CONTAINER | |
| | PALLET (cm) | N° pumps | PALLET (cm) | N° pumps |
| DX(T) | 80×120×150 | 57 | 85×120×190 | 76 |
| | | | 85×110×190 | 72 |

**DX** ▢ **80** ▢ **G**

- ▢ without float switch
- **G** with float switch
- delivery port size ▢ standard
- **/2** larger
- motor ▢ 1~ **T** 3~
- pump type

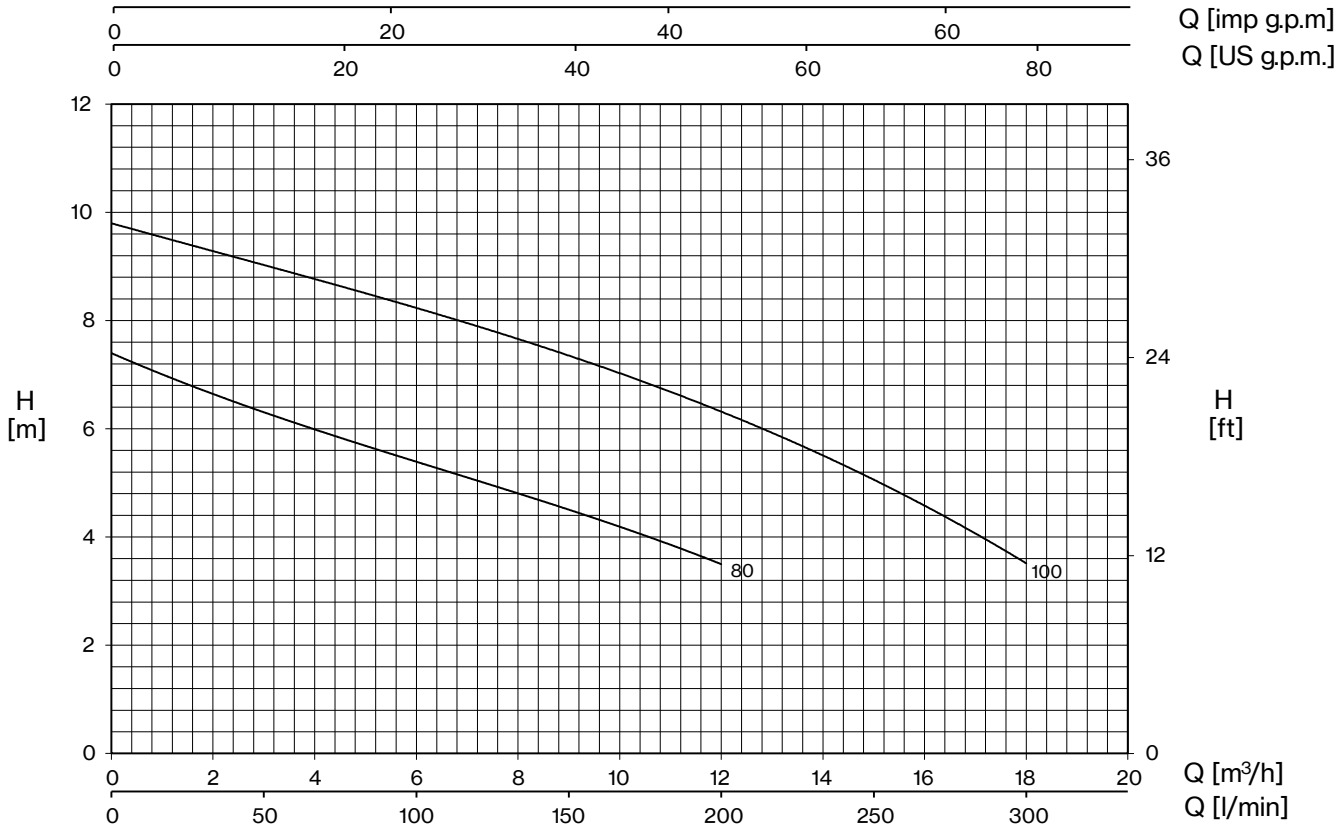


| TYPE - 50 Hz | | P1 | CURRENT | | Q (m³/h - l/min) | | | | | | |
|---|---|---|---|---|---|---|---|---|---|---|---|
| 1~ | 3~ | | 1~ 230V | 3~ 400V | 0 | 3 | 6 | 9 | 12 | 15 | 18 |
| | | | | | 0 | 50 | 100 | 150 | 200 | 250 | 300 |
| | | kW | A | | H (m) | | | | | | |
| **DX 80 (G)** | **DXT 80** | 1,05 | 4,7 | 2,2 | 7,4 | 6,3 | 5,4 | 4,5 | 3,5 | | |
| **DX 80/2 (G)** | **DXT 80/2** | 1,05 | 4,7 | 2,2 | 7,4 | 6,3 | 5,4 | 4,5 | 3,5 | | |
| **DX 100 (G)** | **DXT 100** | 1,35 | 6,2 | 2,8 | 9,8 | 9,0 | 8,3 | 7,3 | 6,3 | 5,1 | 3,5 |
| **DX 100/2 (G)** | **DXT 100/2** | 1,35 | 6,2 | 2,8 | 9,8 | 9,0 | 8,3 | 7,3 | 6,3 | 5,1 | 3,5 |

E: maximum emptying level
Mt: minimum liquid level for continuos duty

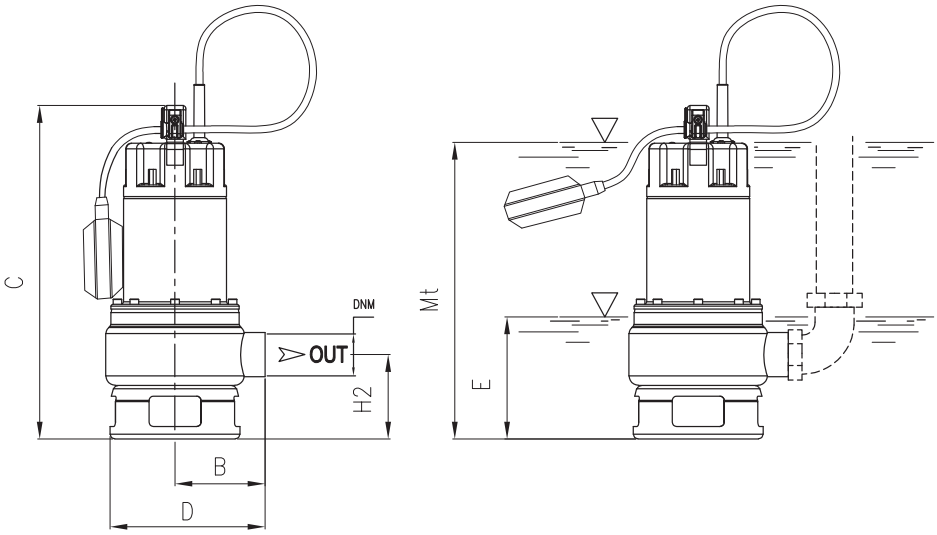


| TYPE | | DIMENSIONS (mm) | | | | | | | | | | Kg |
|---|---|---|---|---|---|---|---|---|---|---|---|---|
| 1~ | 3~ | B | C | D | E | H2 | Mt | DNM | I | L | M | |
| **DX 80 (G)** | **DXT 80** | 104 | 409,5 | 189 | 125 | 112 | 280 | 1" ½ G | 250 | 183 | 448 | 10,5 |
| **DX 80/2 (G)** | **DXT 80/2** | 108 | 409,5 | 193 | 125 | 112 | 280 | 2" G | 250 | 183 | 448 | 10,5 |
| **DX 100 (G)** | **DXT 100** | 104 | 409,5 | 189 | 125 | 112 | 280 | 1" ½ G | 250 | 183 | 448 | 12 |
| **DX 100/2 (G)** | **DXT 100/2** | 108 | 409,5 | 193 | 125 | 112 | 280 | 2" G | 250 | 183 | 448 | 12 |

# DV

Drainage pumps for charged liquids with set-back Vortex type impeller for civil and industrial applications; specifically designed for very heavy use; available in the mobile or permanent versions with coupling feet.

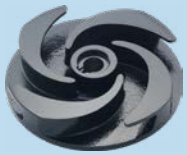

Grey water

Black water

## Construction features

| | |
|---|---|
| **Painting** | cataphoresis |
| **Pump body** | cast iron |
| **Impeller** | cast iron |
| **Mechanical seal** | double seal with oil barrier: silicon carbide on pump side, ceramic-graphite on motor side |
| **Motor shaft** | stainless steel AISI 304 |
| **Free passage** | Ø max 50 mm (160÷310; 750-1000)<br>Ø max 45 mm (400-550) |
| **Max submergence** | 20 m |
| **Liquid temperature** | 0 - 40 °C |
| **Cable** | H07 RN8F, 10 m |
| **Bolts** | A2 stainless steel |
| **Foot support** | galvanized iron |
| **Gaskets** | NBR rubber |

## Motor

| | |
|---|---|
| **2 poles induction motor** | 3~ 230V - 50Hz<br>3~ 400V - 50Hz<br>3~ 230/400V - 50Hz<br>3~ 400/690V - 50Hz<br><br>1~ 230V - 50Hz<br>required run capacitor (35µF for 1,5HP model, 50µF for 2HP model) |
| **Insulation class** | F |
| **Protection degree** | IPX8 |

| LOTS | | | | |
|---|---|---|---|---|
| TYPE | TRUCK | | CONTAINER | |
| | PALLET (cm) | N° pumps | PALLET (cm) | N° pumps |
| **DV(T) 160÷310** | 85×110×145 | 18 | 85×110×190 | 27 |
| **DVT 400-550** | 85×110×170 | 12 | 85×110×170 | 12 |
| **DVT 750-1000** | 100×120×190 | 12 | 100×120×190 | 12 |

**DV T 160 -CF**

- -CF: counter-flange — not included / CF included
- T: motor — 1~ / T 3~
- DV 160: pump type

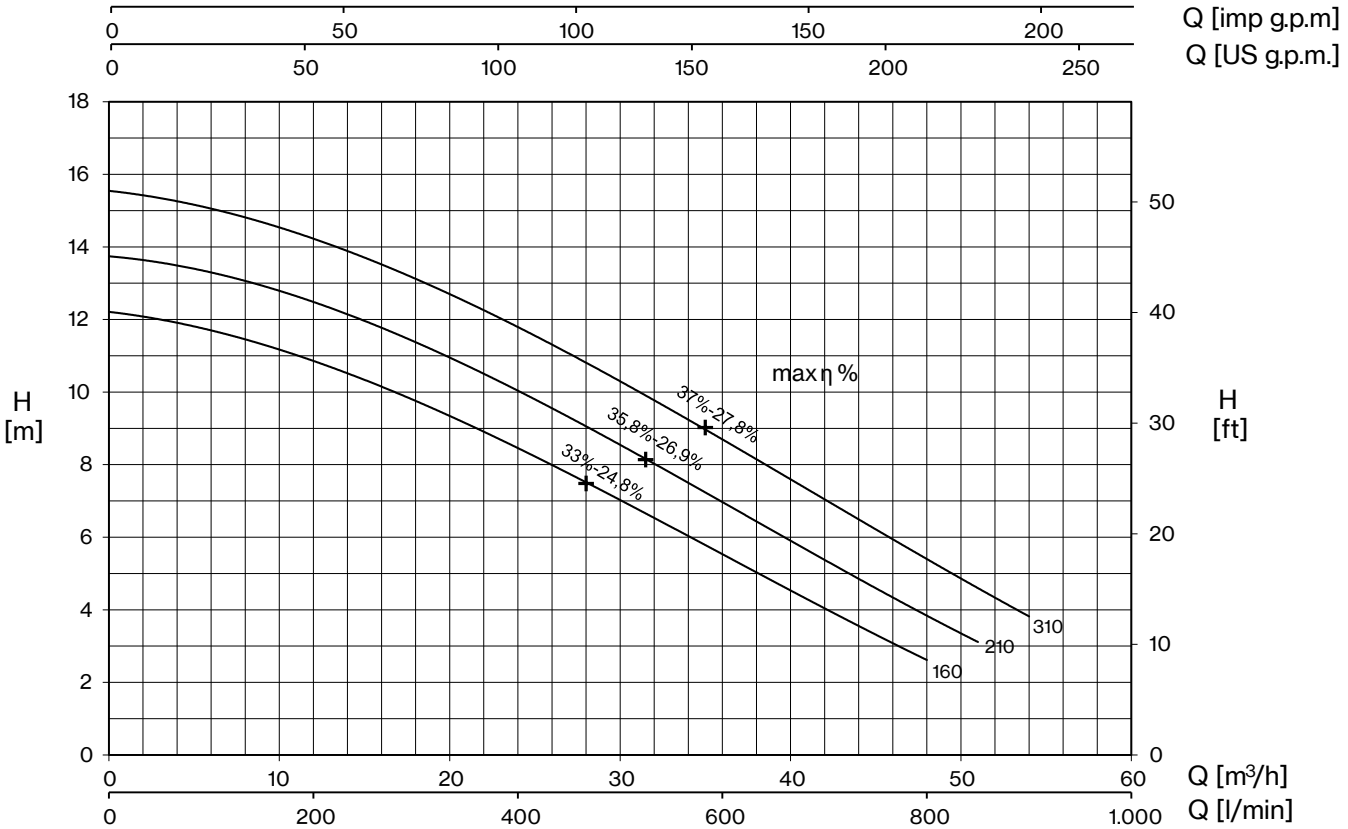


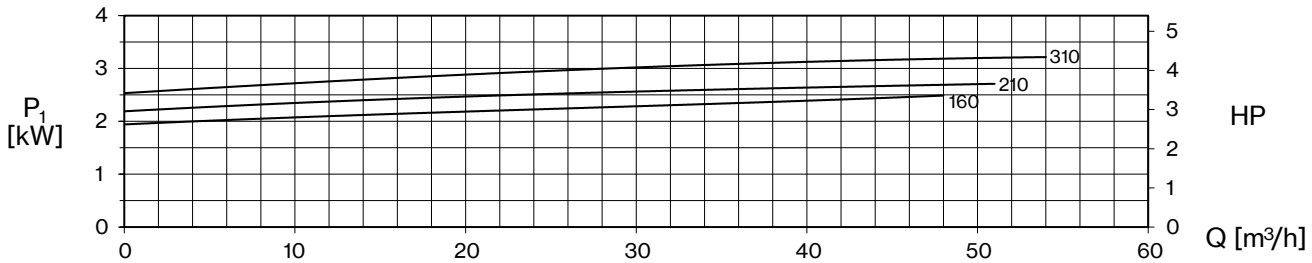


| TYPE - 50 Hz | | CURRENT | | | | |
|---|---|---|---|---|---|---|
| 1~ | 3~ | 230V | 3~ 230V (*) | 3~ 400V | 230/400 V ⅄ / △ (*) | 400/690 V ⅄ / △ |
| **DV 160** | **DVT 160** | 11,3 | 7,1 | 4,1 | - | - |
| **DV 210** | **DVT 210** | 12,6 | 8,7 | 5 | - | - |
| **-** | **DVT 310** | - | 9,9 | 5,7 | - | - |

(*) no standard execution

+ max η %

max hydraulic efficiency and respective total efficiency

| TYPE - 50 Hz | | P2 | | P1 | | Q (m³/h - l/min) | | | | | | | |
|---|---|---|---|---|---|---|---|---|---|---|---|---|---|
| 1~ | 3~ | | | 1~ | 3~ | 0 | 12 | 24 | 36 | 42 | 48 | 51 | 54 |
| | | | | | | 0 | 200 | 400 | 600 | 700 | 800 | 850 | 900 |
| | | HP | kW | kW | | H (m) | | | | | | | |
| **DV 160** | **DVT 160** | 1,5 | 1,1 | 2,5 | 2,3 | 12,2 | 10,9 | 8,4 | 5,6 | 4,1 | 2,6 | | |
| **DV 210** | **DVT 210** | 2 | 1,5 | 2,8 | 2,7 | 13,7 | 12,6 | 9,9 | 7,0 | 5,4 | 3,8 | 3,1 | |
| **-** | **DVT 310** | 3 | 2,2 | - | 3,3 | 15,5 | 14,4 | 11,6 | 8,8 | 7,1 | 5,4 | 4,5 | 3,8 |

# DV

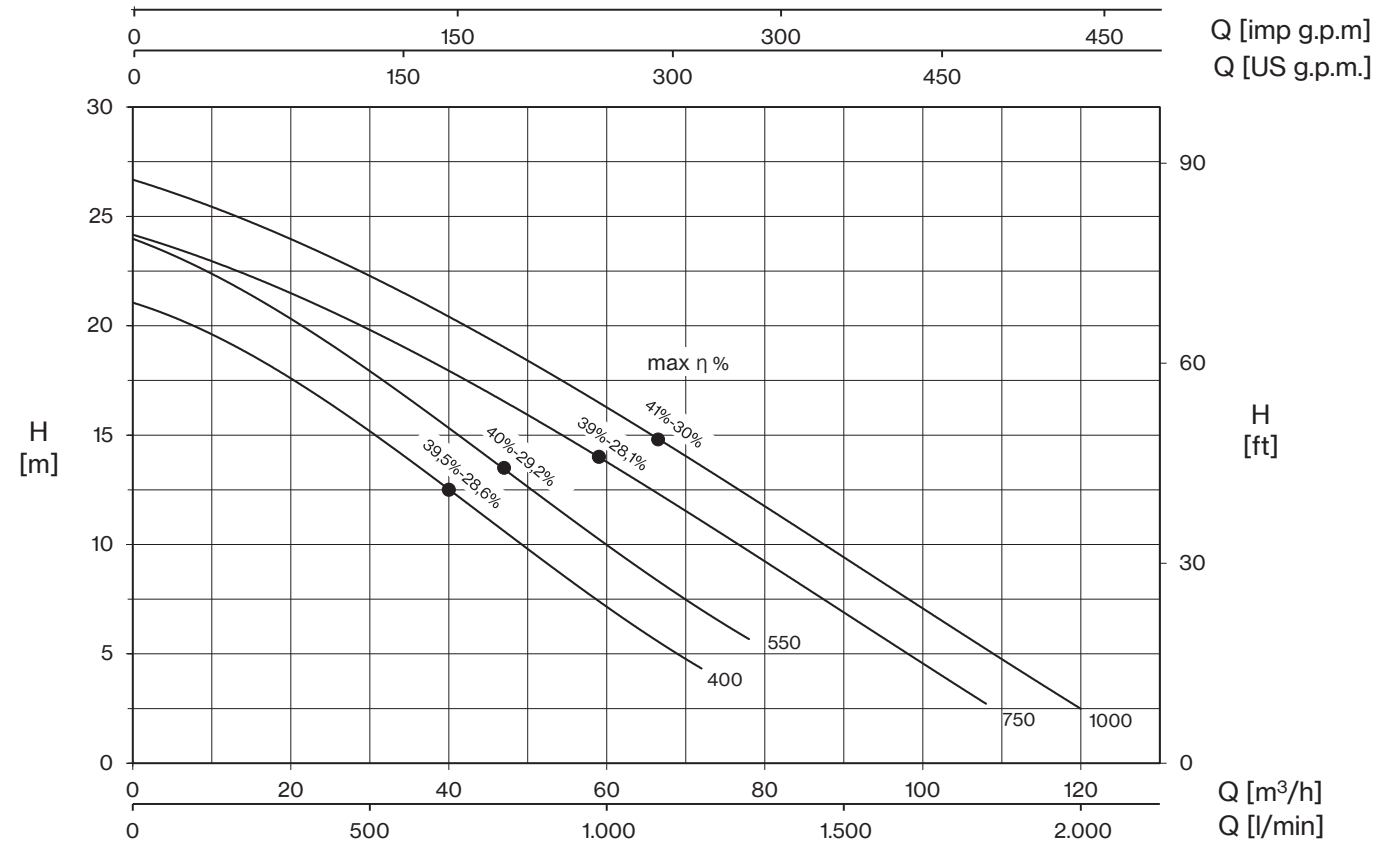


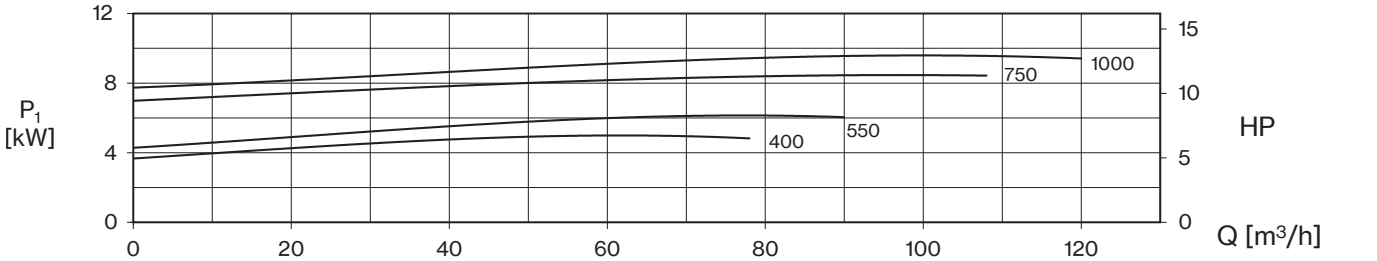


| TYPE - 50 Hz | CURRENT | | | |
|---|---|---|---|---|
| 3~ | 3~ 230V (*) | 3~ 400V | 230/400 V ⅄ / △ (*) | 400/690 V ⅄ / △ |
| **DVT 400** | 14,1 | 8,1 | - | - |
| **DVT 550** | 18,1 | 10,4 | - | - |
| **DVT 750** | - | 14,4 | 25 | 14,4 |
| **DVT 1000** | - | 16,4 | 28,5 | 16,4 |

(*) no standard execution

## + max η %

max hydraulic efficiency and respective total efficiency

| TYPE - 50 Hz | P2 | | P1 | Q (m³/h - l/min) | | | | | | | | | | | | | | | | |
|---|---|---|---|---|---|---|---|---|---|---|---|---|---|---|---|---|---|---|---|---|
| 3~ | | | | 0 | 12 | 24 | 36 | 42 | 48 | 51 | 54 | 60 | 72 | 78 | 84 | 90 | 96 | 108 | 114 | 120 |
| | | | | 0 | 200 | 400 | 600 | 700 | 800 | 850 | 900 | 1000 | 1200 | 1300 | 1400 | 1500 | 1600 | 1800 | 1900 | 2000 |
| | HP | kW | kW | H (m) | | | | | | | | | | | | | | | | |
| **DVT 400** | 4 | 3 | 4,9 | 21,0 | 19,4 | 16,6 | 13,5 | 12,0 | 10,4 | 9,6 | 8,8 | 7,2 | 4,3 | 2,8 | | | | | | |
| **DVT 550** | 5,5 | 4 | 6,1 | 23,9 | 22,2 | 19,3 | 16,3 | 14,8 | 13,2 | 12,4 | 11,6 | 10 | 7,1 | 5,6 | 4,1 | 2,6 | | | | |
| **DVT 750** | 7,5 | 5,5 | 8,5 | 24,2 | 22,7 | 20,7 | 18,7 | 17,6 | 16,4 | 15,8 | 15,2 | 13,9 | 11,1 | 9,7 | 8,2 | 6,8 | 5,4 | 2,8 | | |
| **DVT 1000** | 10 | 7,5 | 9,6 | 26,7 | 25,2 | 23,2 | 21,2 | 20,0 | 18,8 | 18,2 | 17,6 | 16,3 | 13,7 | 12,3 | 10,8 | 9,4 | 8,0 | 5,1 | 3,8 | 2,6 |

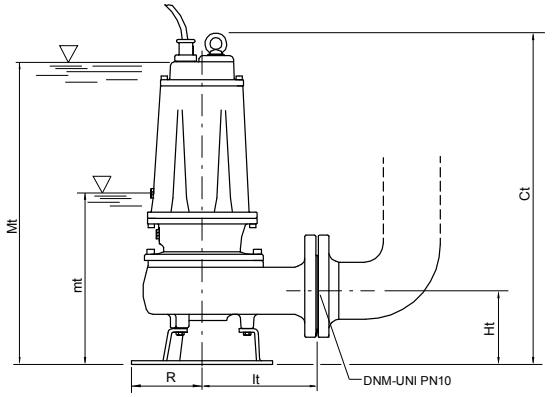


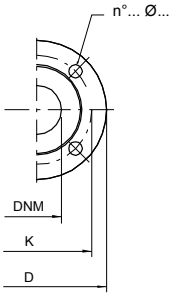


mt: minimum working level

Mt: minimum submengence level for continuos duty

## ACCESSORIES

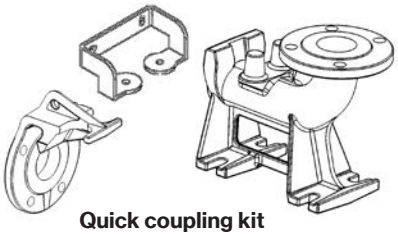

**Quick coupling kit**

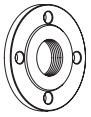

**Counterflange**

| TYPE | | DIMENSIONS (mm) | | | | | | | Kg | |
|---|---|---|---|---|---|---|---|---|---|---|
| 1~ | 3~ | Ct | Ht | R | It | mt | Mt | DNM | 1~ | 3~ |
| **DV 160** | **DVT 160** | 551 | 123 | 117 | 191 | 243 | 513 | 65 | 40,5 | 39,5 |
| **DV 210** | **DVT 210** | 551 | 123 | 117 | 191 | 243 | 513 | 65 | 41,5 | 40,5 |
| **-** | **DVT 310** | 551 | 123 | 117 | 191 | 243 | 513 | 65 | - | 41,5 |
| **-** | **DVT 400** | 645 | 148 | 160 | 210 | 285 | 600 | 80 | - | 68 |
| **-** | **DVT 550** | 645 | 148 | 160 | 210 | 285 | 600 | 80 | - | 71 |
| **-** | **DVT 750** | 725 | 178 | 180 | 232 | 358 | 670 | 80 | - | 90 |
| **-** | **DVT 1000** | 725 | 178 | 180 | 232 | 358 | 670 | 80 | - | 92,5 |

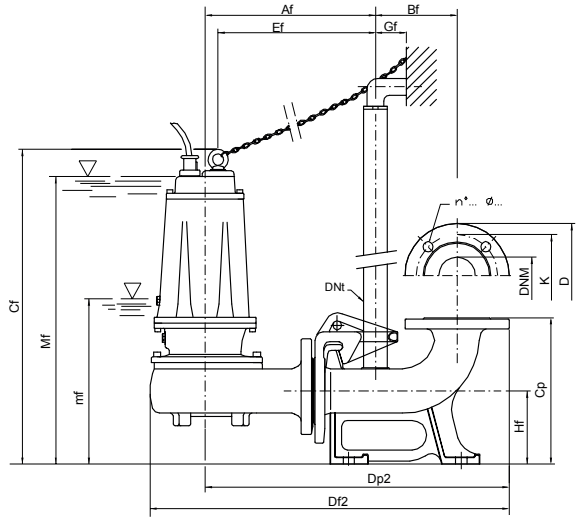


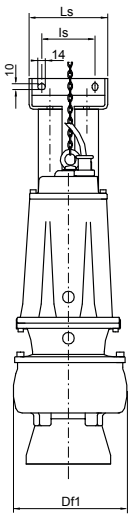


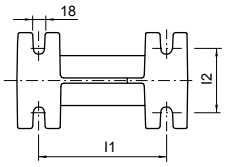


mf: minimum working level

Mf: minimum submengence level for continuos duty

| Flange UNI PN 10 (mm) | | | |
|---|---|---|---|
| DNM | K | D | n°... ø... |
| 65 | 145 | 185 | 4... 18... |
| 80 | 160 | 200 | 8... 18... |

| TYPE | | DIMENSIONS (mm) | | | | | | | | | | | | | | | | | |
|---|---|---|---|---|---|---|---|---|---|---|---|---|---|---|---|---|---|---|---|
| 1~ | 3~ | Af | Bf | Cf | Cp | Df1 | Df2 | Dp2 | DNt | Ef | Gf | Hf | I1 | I2 | Is | Ls | mf | Mf | DNM |
| **DV 160/P** | **DVT 160/P** | 303 | 145 | 559 | 260 | 200 | 639 | 541 | 1” ¼ | 280 | 55 | 130 | 200 | 100 | 95 | 140 | 251 | 521 | 65 |
| **DV 210/P** | **DVT 210/P** | 303 | 145 | 559 | 260 | 200 | 639 | 541 | 1” ¼ | 280 | 55 | 130 | 200 | 100 | 95 | 140 | 251 | 521 | 65 |
| **-** | **DVT 310/P** | 303 | 145 | 559 | 260 | 200 | 639 | 541 | 1” ¼ | 280 | 55 | 130 | 200 | 100 | 95 | 140 | 251 | 521 | 65 |
| **-** | **DVT 400/P** | 350 | 165 | 690 | 340 | 220 | 720 | 615 | 2” | 319 | 85 | 190 | 250 | 140 | 130 | 180 | 327 | 642 | 80 |
| **-** | **DVT 550/P** | 350 | 165 | 690 | 340 | 220 | 720 | 615 | 2” | 319 | 85 | 190 | 250 | 140 | 130 | 180 | 327 | 642 | 80 |
| **-** | **DVT 750/P** | 370 | 165 | 745 | 340 | 235 | 750 | 638 | 2” | 338 | 85 | 190 | 250 | 140 | 130 | 180 | 380 | 690 | 80 |
| **-** | **DVT 1000/P** | 370 | 165 | 745 | 340 | 235 | 750 | 638 | 2” | 338 | 85 | 190 | 250 | 140 | 130 | 180 | 380 | 690 | 80 |

| TYPE | PROTECTION | | 1 PUMP CONTROL PANEL | | | 2 PUMPS CONTROL PANEL | | |
|---|---|---|---|---|---|---|---|---|
| | 1~ 230V | 3~ 400V | 1~ 230V | 3~ 400V | 400/690 V | 1~ 230V | 3~ 400V | 400/690 V |
| **DV 160** | PMC 15/35-15 | PT 20-30-40/4.3-6.8 | EQSM + 35µF | EQSMT 10 | - | EQ2SM + 35µF | EQ2SMT 10 | - |
| **DV 210** | PMC 20/50-18 | PT 20-30-40/4.3-6.8 | EQSM + 50µF | EQSMT 10 | - | EQ2SM + 50µF | EQ2SMT 10 | - |
| **DVT 310** | - | PT 40-50/5.7-9.1 | - | EQSMT 10 | - | - | EQ2SMT 10 | - |
| **DVT 400** | - | PT 55-75/8.6-13.5 | - | EQSMT 10 | - | - | EQ2SMT 10 | - |
| **DVT 550** | - | PT 55-75/8.6-13.5 | - | EQSMT 10 | - | - | EQ2SMT 10 | - |
| **DVT 750** | - | PT 100/12.5-16.5 | - | EQSMT 10 | QST 7 | - | EQ2SMT 10 | Q2ST 7 |
| **DVT 1000** | - | PT 125-150/16-21 | - | EQSMT 10 | QST 10 | - | EQ2SMT 15 | Q2ST 10 |

# DV4

**Sewage**
Vortex

Drainage pumps for charged liquids with set-back Vortex type impeller for civil and industrial applications; specifically designed for very heavy use; available in the mobile or permanent versions with coupling feet.

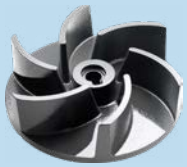

Grey water

Black water

## Construction features

| | |
|---|---|
| **Painting** | cataphoresis |
| **Pump body** | cast iron |
| **Impeller** | cast iron |
| **Mechanical seal** | double seal with oil barrier: silicon carbide on pump side, ceramic-graphite on motor side |
| **Motor shaft** | stainless steel AISI 304 |
| **Free passage** | Ø max 50 mm |
| **Max submergence** | 20 m |
| **Liquid temperature** | 0 - 40 °C |
| **Cable** | H07 RN8F, 10 m |
| **Bolts** | A2 stainless steel |
| **Foot support** | galvanized iron |
| **Gaskets** | NBR rubber |

## Motor

| | |
|---|---|
| **4 poles induction motor** | 3~ 230V - 50Hz<br>3~ 400V - 50Hz<br>3~ 230/400V - 50Hz<br>3~ 400/690V - 50Hz |
| **Insulation class** | F |
| **Protection degree** | IPX8 |

| LOTS | | | | |
|---|---|---|---|---|
| TYPE | TRUCK | | CONTAINER | |
| | PALLET (cm) | N° pumps | PALLET (cm) | N° pumps |
| **DVT 250-4÷750-4** | 85×110×190 | 8 | 100×120×190 | 12 |

**DV T 550 - 4 -CF**

- pump type
- motor **T** 3~
- poles
- counter-flange: not included / **CF** included

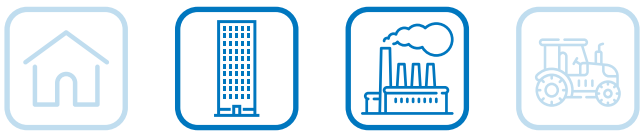

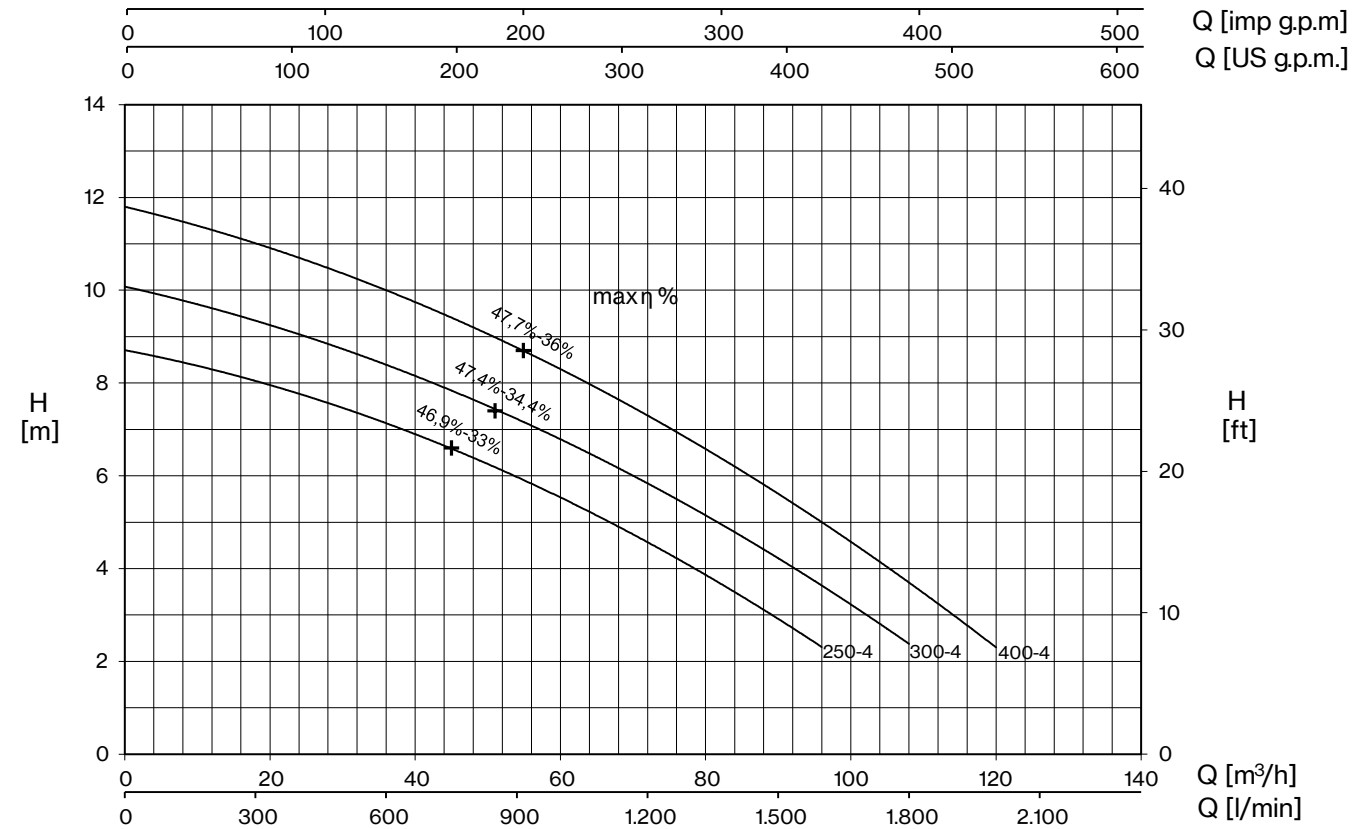


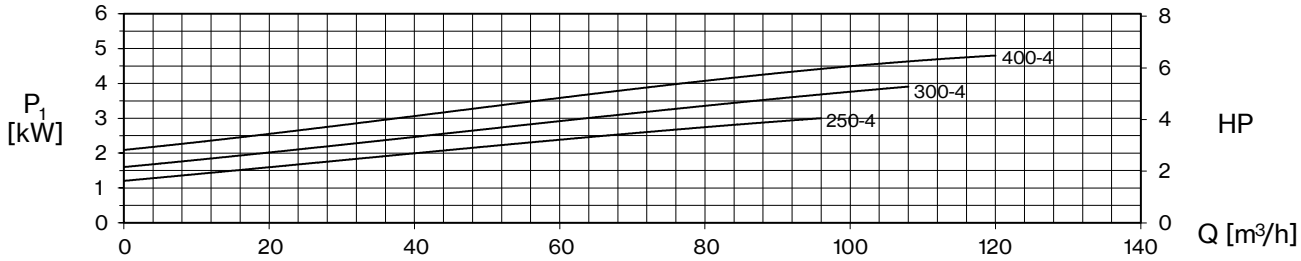


| TYPE - 50 Hz | CURRENT | | | |
|---|---|---|---|---|
| 3~ | 3~ 230V (*) | 3~ 400V | 230/400 V ⅄ / △ (*) | 400/690 V ⅄ / △ |
| **DVT 250-4** | 10 | 5,8 | - | - |
| **DVT 300-4** | 11,8 | 6,8 | - | - |
| **DVT 400-4** | 15,1 | 8,7 | - | - |

(*) no standard execution

+ max η %

max hydraulic efficiency and respective total efficiency

| TYPE - 50 Hz | P2 | | P1 | Q (m³/h - l/min) | | | | | | | | | | |
|---|---|---|---|---|---|---|---|---|---|---|---|---|---|---|
| 3~ | | | | 0 | 12 | 24 | 36 | 48 | 60 | 72 | 84 | 96 | 108 | 120 |
| | | | | 0 | 200 | 400 | 600 | 800 | 1000 | 1200 | 1400 | 1600 | 1800 | 2000 |
| | HP | kW | kW | H (m) | | | | | | | | | | |
| **DVT 250-4** | 2,5 | 1,8 | 3,3 | 8,7 | 8,3 | 7,8 | 7,1 | 6,4 | 5,5 | 4,6 | 3,5 | 2,3 | | |
| **DVT 300-4** | 3 | 2,2 | 4,1 | 10,1 | 9,6 | 9,0 | 8,4 | 7,7 | 6,8 | 5,8 | 4,8 | 3,6 | 2,4 | |
| **DVT 400-4** | 4 | 3 | 4,9 | 11,8 | 11,3 | 10,7 | 10,0 | 9,2 | 8,3 | 7,3 | 6,2 | 5,0 | 3,7 | 2,3 |

# DV4

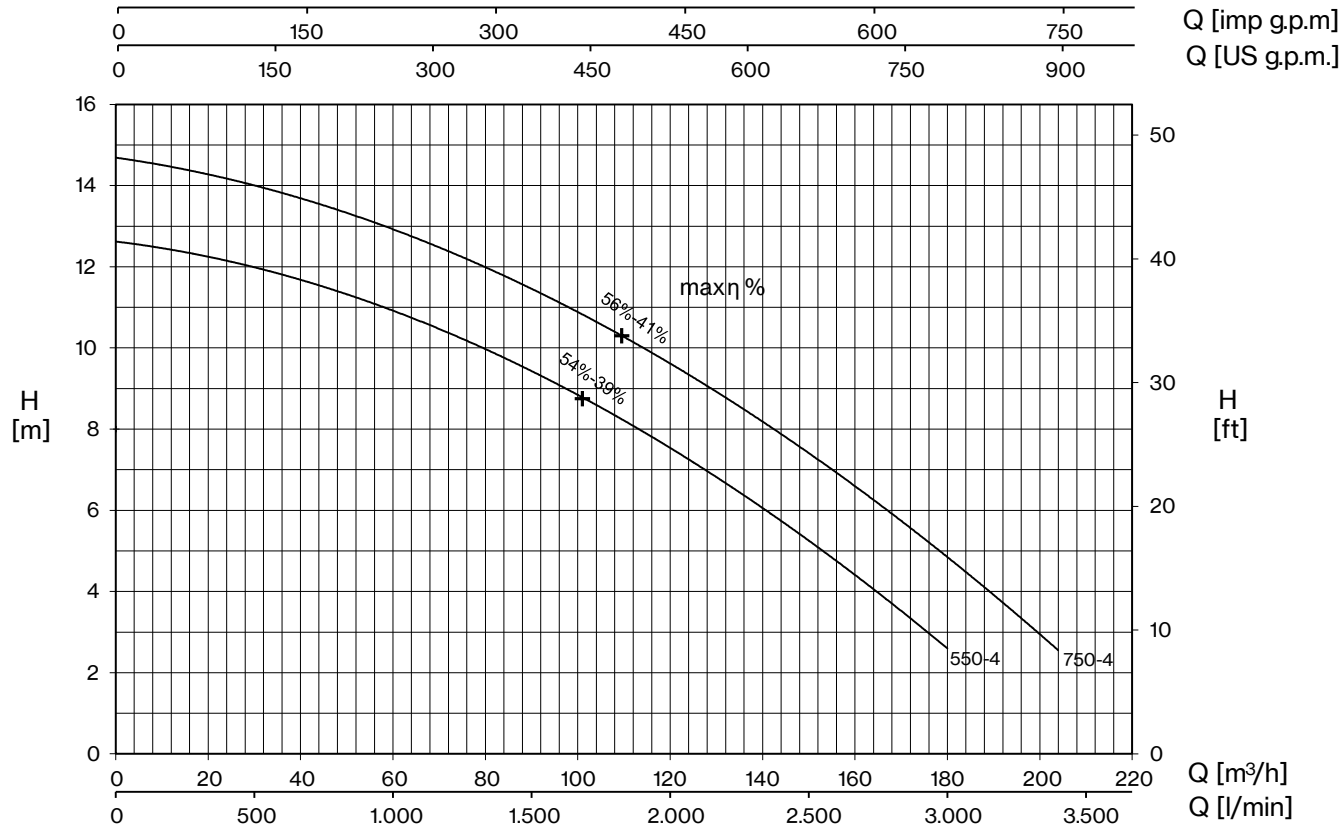


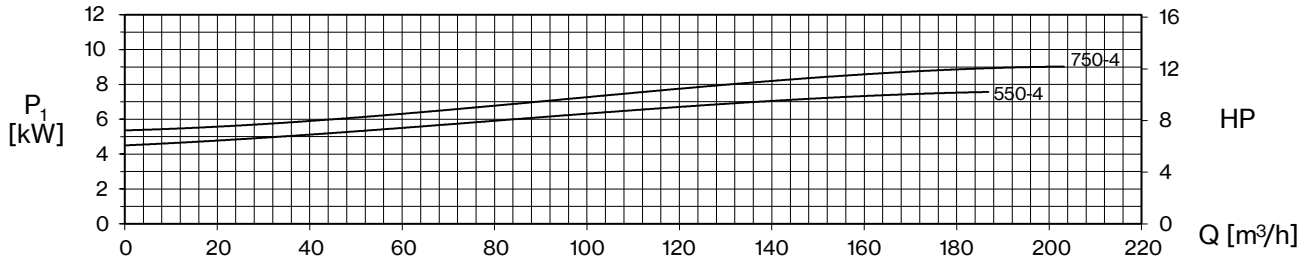


| TYPE - 50 Hz | CURRENT | | | |
|---|---|---|---|---|
| 3~ | 3~ 230V (*) | 3~ 400V | 230/400 V ⅄ / △ (*) | 400/690 V ⅄ / △ |
| **DVT 550-4** | - | 12,9 | 22,3 | 12,9 |
| **DVT 750-4** | - | 15,4 | 26,6 | 15,4 |

(*) no standard execution

+ max η %

max hydraulic efficiency and respective total efficiency

| TYPE - 50 Hz | P2 | | P1 | Q (m³/h - l/min) | | | | | | | | | | |
|---|---|---|---|---|---|---|---|---|---|---|---|---|---|---|
| 3~ | | | | 0 | 24 | 48 | 72 | 96 | 120 | 144 | 168 | 180 | 192 | 204 |
| | | | | 0 | 400 | 800 | 1200 | 1600 | 2000 | 2400 | 2800 | 3000 | 3200 | 3400 |
| | HP | kW | kW | H (m) | | | | | | | | | | |
| **DVT 550-4** | 5,5 | 4 | 7,5 | 12,6 | 12,2 | 11,4 | 10,3 | 9,1 | 7,6 | 5,7 | 3,7 | 2,6 | | |
| **DVT 750-4** | 7,5 | 5,5 | 9 | 14,7 | 14,2 | 13,3 | 12,4 | 11,2 | 9,6 | 7,9 | 5,9 | 4,8 | 3,7 | 2,6 |

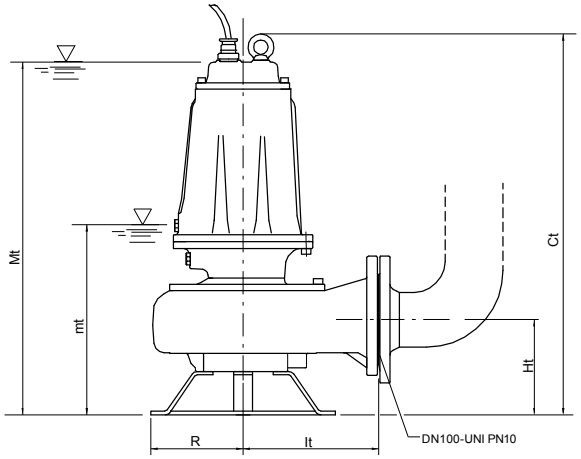


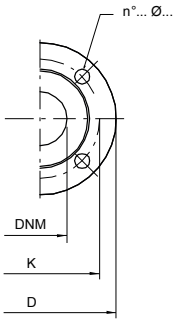


## ACCESSORIES

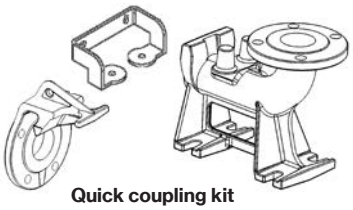

Quick coupling kit

Counterflange

mt: minimum working level
Mt: minimum submengence level for continuos duty

| TYPE | DIMENSIONS (mm) | | | | | | | Kg |
|---|---|---|---|---|---|---|---|---|
| 3~ | Ct | Ht | R | It | mt | Mt | DNM | |
| **DVT 250-4** | 660 | 165 | 160 | 235 | 300 | 614 | 100 | 69,5 |
| **DVT 300-4** | 660 | 165 | 160 | 235 | 300 | 614 | 100 | 71 |
| **DVT 400-4** | 660 | 165 | 160 | 235 | 300 | 614 | 100 | 74,5 |
| **DVT 550-4** | 715 | 195 | 180 | 276 | 385 | 695 | 100 | 101,5 |
| **DVT 750-4** | 715 | 195 | 180 | 276 | 385 | 695 | 100 | 106 |

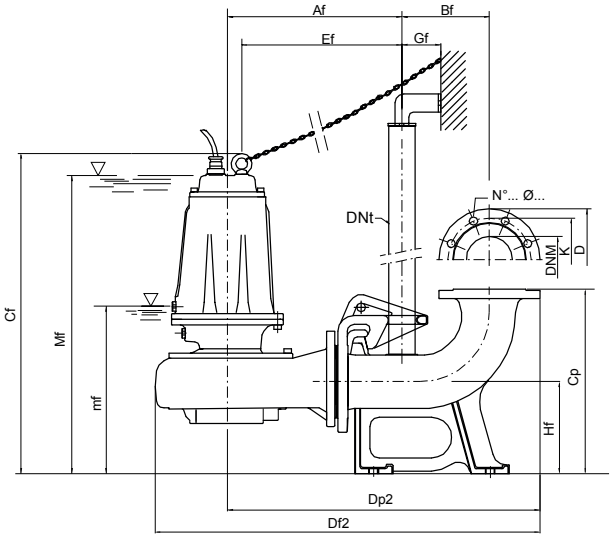


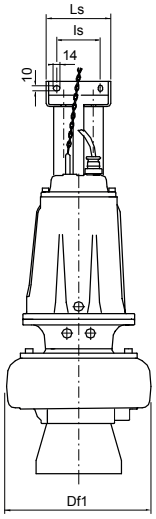


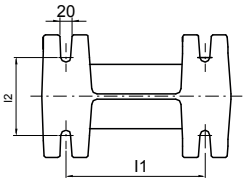


mf: minimum working level
Mf: minimum submengence level for continuos duty

| Flange UNI PN 10 (mm) | | | |
|---|---|---|---|
| DNM | K | D | n°... ø... |
| 100 | 180 | 220 | 8... 18... |

| TYPE | DIMENSIONS (mm) | | | | | | | | | | | | | | | | | |
|---|---|---|---|---|---|---|---|---|---|---|---|---|---|---|---|---|---|---|
| 3~ | Af | Bf | Cf | Cp | Df1 | Df2 | Dp2 | DNt | Ef | Gf | Hf | l1 | l2 | Is | Ls | mf | Mf | DNM |
| **DVT 250-4/P** | 378 | 190 | 695 | 400 | 317 | 835 | 678 | 2” | 347 | 85 | 200 | 250 | 140 | 130 | 180 | 335 | 650 | 100 |
| **DVT 300-4/P** | 378 | 190 | 695 | 400 | 317 | 835 | 678 | 2” | 347 | 85 | 200 | 250 | 140 | 130 | 180 | 335 | 650 | 100 |
| **DVT 400-4/P** | 378 | 190 | 695 | 400 | 317 | 835 | 678 | 2” | 347 | 85 | 200 | 250 | 140 | 130 | 180 | 335 | 650 | 100 |
| **DVT 550-4/P** | 419 | 190 | 755 | 400 | 371 | 900 | 719 | 2” | 384 | 85 | 200 | 250 | 140 | 130 | 180 | 390 | 700 | 100 |
| **DVT 750-4/P** | 419 | 190 | 755 | 400 | 371 | 900 | 719 | 2” | 384 | 85 | 200 | 250 | 140 | 130 | 180 | 390 | 700 | 100 |

| TYPE | PROTECTION | 1 PUMP CONTROL PANEL | | 2 PUMPS CONTROL PANEL | |
|---|---|---|---|---|---|
| | 3~ 400V | 3~ 400V | 400/690 V | 3~ 400V | 400/690 V |
| **DVT 250-4** | PT 40-50/5.7-9.1 | EQSMT 10 | - | EQ2SMT 10 | - |
| **DVT 300-4** | PT 40-50/5.7-9.1 | EQSMT 10 | - | EQ2SMT 10 | - |
| **DVT 400-4** | PT 55-75/8.6-13.5 | EQSMT 10 | - | EQ2SMT 10 | - |
| **DVT 550-4** | PT 55-75/8.6-13.5 | EQSMT 10 | - | EQ2SMT 10 | - |
| **DVT 750-4** | PT 100/12.5-16.5 | EQSMT 10 | QST 10 | EQ2SMT 10 | Q2ST 10 |

Pentax®

WATER PUMPS

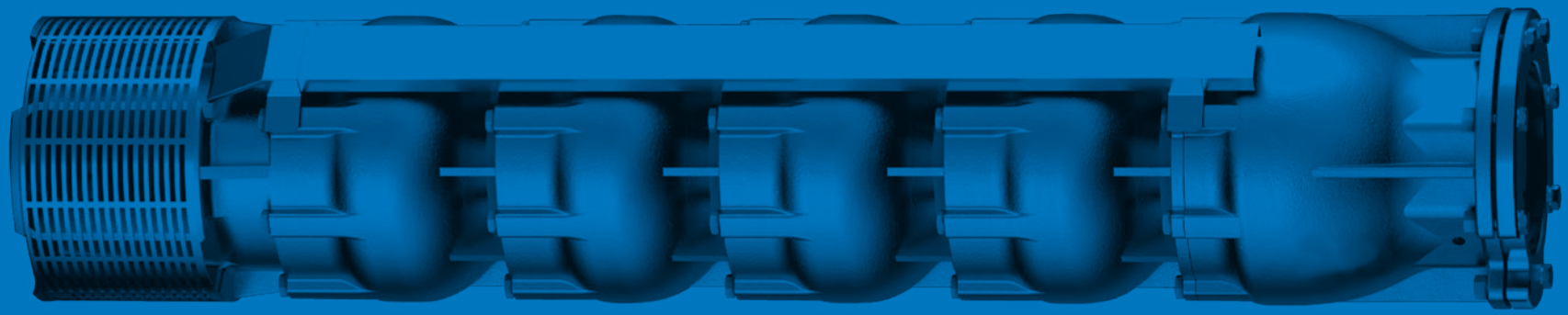

# SUBMERSIBLE WELL PUMPS

# SUBMERSIBLE WELL PUMPS

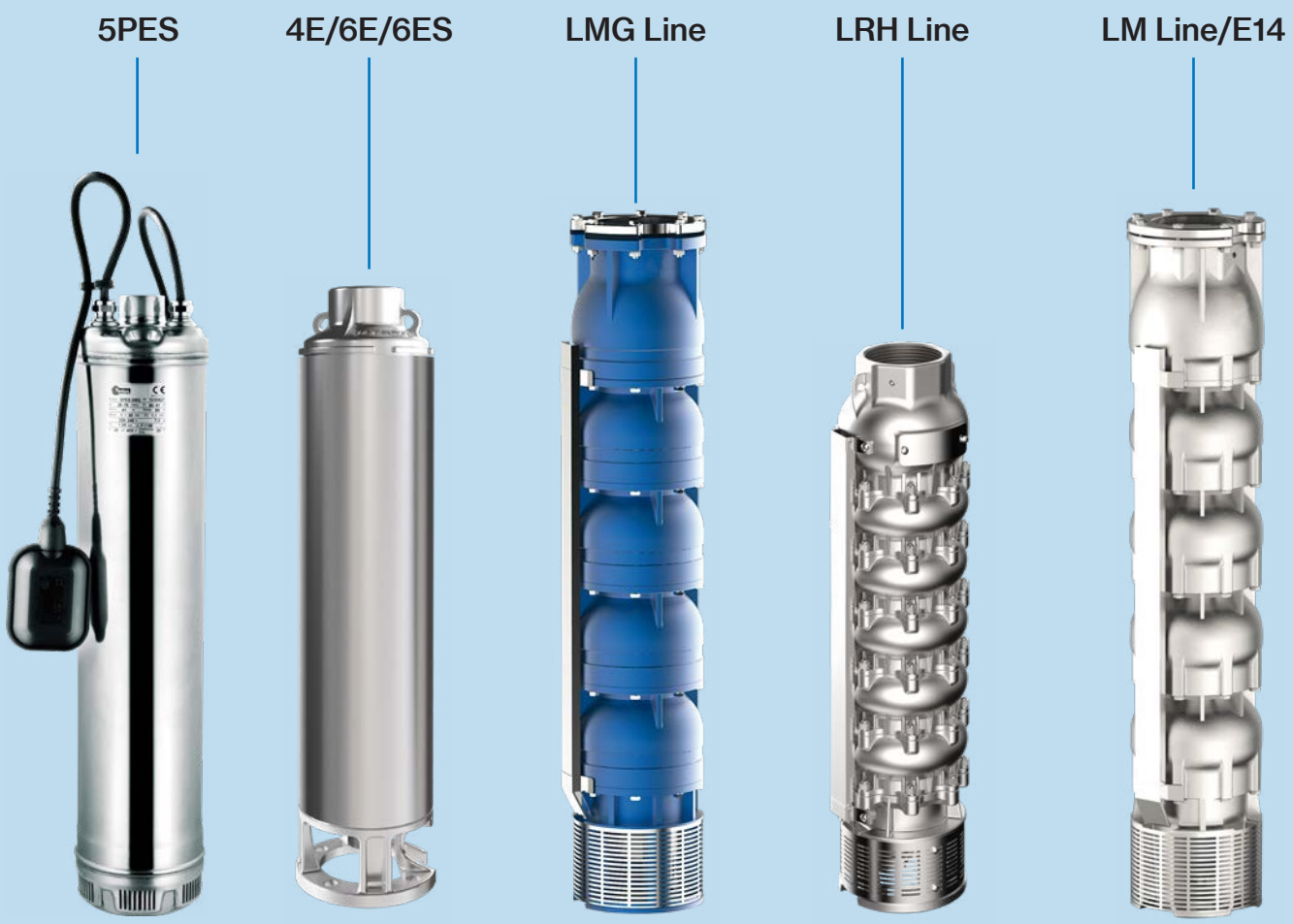


- **5PES line:** 5” electric pumps with pressed steel body and stainless steel hydraulic.
- **4E, 6E, 6ES line**: 4”, 6” electric well pumps with pressed steel body, and polymer hydraulics. Coupling to the motor according to Nema flange.
- **6-8-10LMG line**: 6”, 8” and 10” electric well pumps with cast iron hydraulics. Non-return valve in the delivery port and motor coupling according to Nema flange.
- **LM, LRH and E14 line**: 6”, 8”, 10”, 12” and 14” electric well pumps manufactured with a micro-casting process that allows to obtain very smooth hydraulic surfaces and therefore high hydraulic efficiency values, all combined with a high mechanical resistance thanks to the cast steel structure. The range is available in AISI304, AISI316 and Duplex steel types with flow rates up to 860m³/h and 800 m maximum head. The check valve is incorporated in the delivery port, while coupling with the motor is ensured by NEMA flanging.

**Applications:**
- Water supply for civil and industrial uses
- Distribution in aqueducts
- Agricultural irrigation
- Installation on wells and groundwater withdrawal
- Reverse osmosis plants

# SUBMERSIBLE WELL PUMPS

## Low-Medium flow

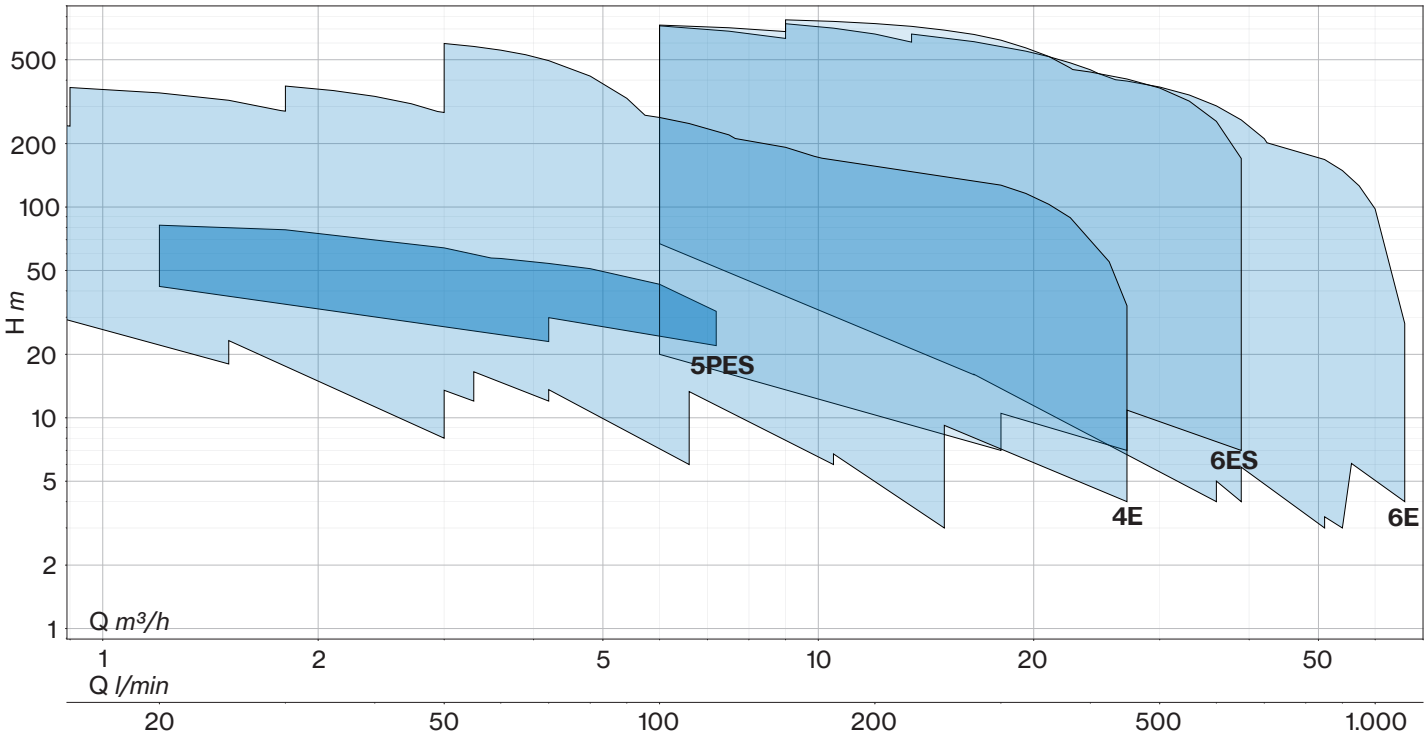


## High flow

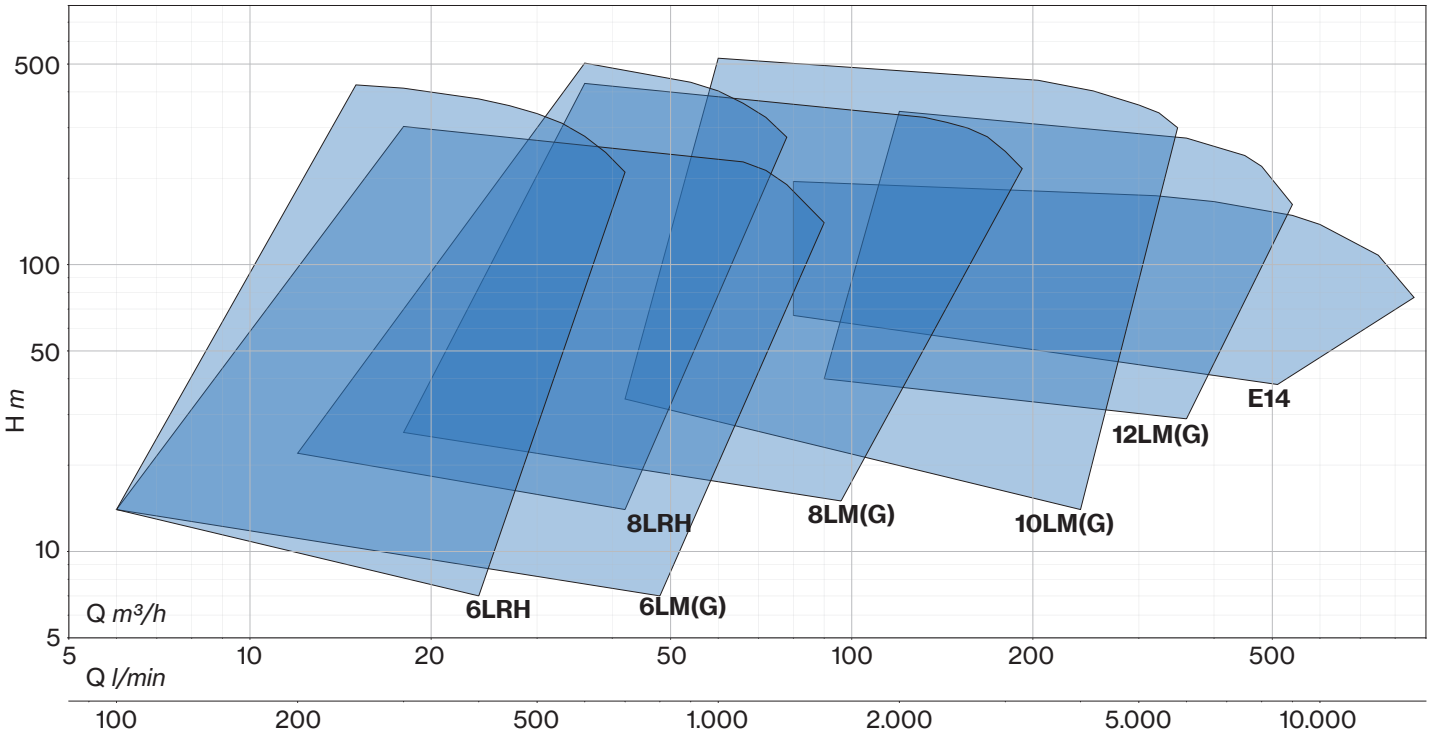

# Name key

## 5 PES line

**5 PES 3 / 7 G**

- G — float switch
- (blank) — without float switch
- 7 — No. of stages
- 3 — Nominal flow rate (m³/h)
- (blank) — Motor: 1~
- T — Motor: 3~
- PES — Pump type
- 5 — Pump size (inches)

## 4E - 6E line

**4 E 100 / 39 - 75 - 4MPET75**

- 4MPET75 — Motor model if included
- (blank) — Motor flange size in inches: as same as the pump size
- -4 — Motor flange size in inches: 6E pump with 4" motor flange
- 75 — Nominal power HP x10
- 39 — No. of stages
- 100 — Nominal flow rate (l/min)
- E — Version: polymer hydraulic
- 4 — Pump size (4" - 6")
- 4 E — Pump type

## 6ES line

**6ES 300 / 12 - 100 Y**

- Y — dual cable gland
- (blank) — single cable gland
- 100 — Nominal power HP x10
- 12 — No. of stages
- 300 — Impeller design
- 6ES — Pump type

## LRH - LM line

**8 LM X  80 / 03 -6 -6R25**

- **Motor model** if included
- **Motor flange size in inches** (only specified if different from the pump size)
- **No. of stages**
- **Nominal flow rate (m³/h)**
- **Impeller material**
  - ( ) as same as the pump material
  - **s** AISI 304
  - **x** AISI 316
  - **d** Duplex
  - **l** AISI 904L
- **Material**
  - **G** cast iron
  - **S** AISI 304
  - **X** AISI 316
  - **D** Duplex
  - **L** AISI 904L
- **Version**
  - **LRH** radial
  - **LM** semi-axial
- **Pump size (inches)**
- **Pump type**

## E14 line

**E 14 A / 1 D - 8 -**

- **Motor model** if included
- **Motor flange size in inches** (only specified if different from the pump size)
- **Impeller reduction type**
- **No. of stages**
- **A** flow rate up to 480 m³/h
  - **B** flow rate up to 800 m³/h
- **Pump size (inches)**
- **Pump type**

# 5PES

## Submersible Well Pumps

5” submersible multistage centrifugal pumps. All components in contact with fluid are made of AISI 304 stainless steel. Particulary suitable for water distribution rainwater collection, irrigation, fountains, wash down unit. Single phase versions have an internal capacitor and thermal motorprotector.

| Construction features | |
|---|---|
| **Delivery outlet** | 1” ¼ G |
| **External jacket, impellers and diffusers** | stainles steel AISI 304 |
| **Passage of solids** | 2 mm |
| **Depth of immersion** | max 20 m |
| **Liquid temperature** | +5 ÷ +40 °C |
| **Quantity of sand in the water** | max 50 g/m³ |
| **Cable** | H07 RNF, 20 m |
| **Number of startups/hr** | max 40, with 1 min. resting time |

| Motor | |
|---|---|
| **Asynchronous 2 poles** | 3~ 380/415V - 50Hz<br>1~ 220/240V - 50Hz<br>(with thermal protection) |
| **Insulation class** | F |
| **Protection degree** | IP68 |

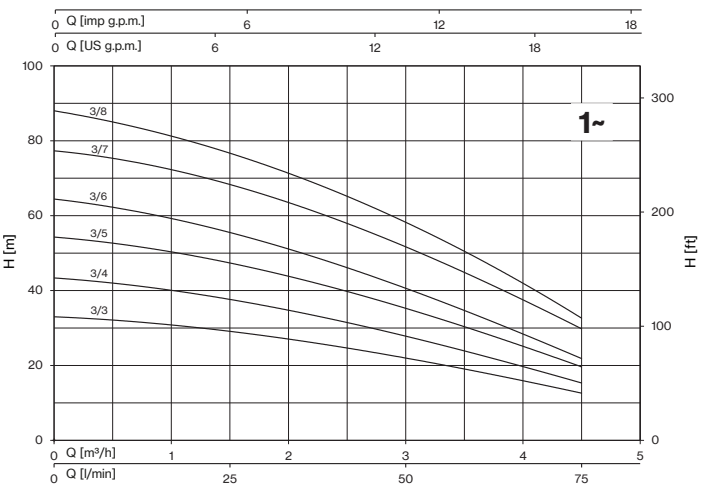


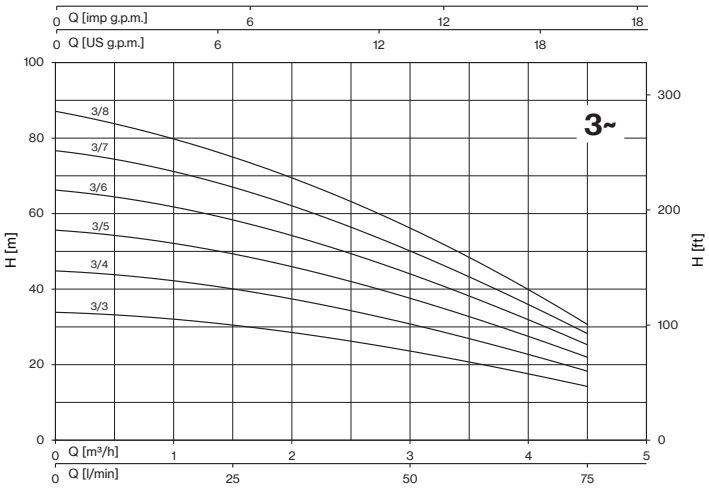


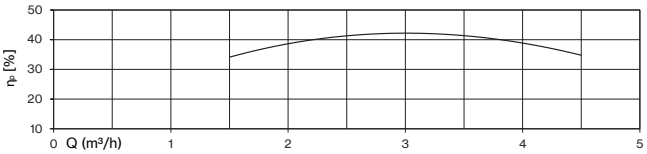


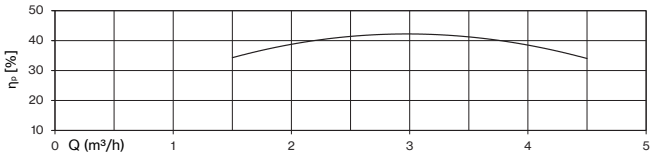


| TYPE - 50 Hz | P2 | | P1 | CURRENT | Q (m³/h - l/min) | | | | | |
|---|---|---|---|---|---|---|---|---|---|---|
| 1~ | | | | 1~ | 0 | 1,5 | 2 | 2,5 | 3 | 4,5 |
| | | | | 230 V | 0 | 25 | 33,3 | 41,7 | 50 | 75 |
| | HP | kW | kW | A | H (m) | | | | | |
| **5PES 3/3** | 0,75 | 0,55 | 0,6 | 3,6 | 33 | 29,1 | 27,1 | 24,6 | 22 | 12,6 |
| **5PES 3/4** | 0,75 | 0,55 | 0,8 | 4 | 43,4 | 37,7 | 34,8 | 31,3 | 27,9 | 15,3 |
| **5PES 3/5** | 1 | 0,75 | 1 | 4,7 | 54,3 | 47,4 | 43,9 | 39,6 | 35,4 | 19,6 |
| **5PES 3/6** | 1 | 0,75 | 1,2 | 5,2 | 64,4 | 55,5 | 51,2 | 45,9 | 40,7 | 21,8 |
| **5PES 3/7** | 1,2 | 0,9 | 1,3 | 6,7 | 77,3 | 68,3 | 63,6 | 57,7 | 51,8 | 29,8 |
| **5PES 3/8** | 1,5 | 1,1 | 1,5 | 7,2 | 87,8 | 77,1 | 71,6 | 64,8 | 58 | 32,8 |

| TYPE - 50 Hz | P2 | | P1 | CURRENT | Q (m³/h - l/min) | | | | | |
|---|---|---|---|---|---|---|---|---|---|---|
| 3~ | | | | 3~ | 0 | 1,5 | 2 | 2,5 | 3 | 4,5 |
| | | | | 400 V | 0 | 25 | 33,3 | 41,7 | 50 | 75 |
| | HP | kW | kW | A | H (m) | | | | | |
| **5PEST 3/3** | 0,75 | 0,55 | 0,6 | 1,8 | 33,9 | 30,5 | 28,5 | 26,2 | 23,6 | 14,2 |
| **5PEST 3/4** | 0,75 | 0,55 | 0,8 | 2 | 44,8 | 40,1 | 37,4 | 34,2 | 30,8 | 18,3 |
| **5PEST 3/5** | 1 | 0,75 | 1 | 2,1 | 55,6 | 49,3 | 46,0 | 41,9 | 37,6 | 22 |
| **5PEST 3/6** | 1 | 0,75 | 1,2 | 2,3 | 66,2 | 58,4 | 54,2 | 49,2 | 44,1 | 25,3 |
| **5PEST 3/7** | 1,2 | 0,9 | 1,3 | 2,5 | 76,7 | 67 | 62,1 | 56,2 | 50,2 | 28,2 |
| **5PEST 3/8** | 1,5 | 1,1 | 1,5 | 2,7 | 86,9 | 75,4 | 69,7 | 62,8 | 56 | 30,8 |

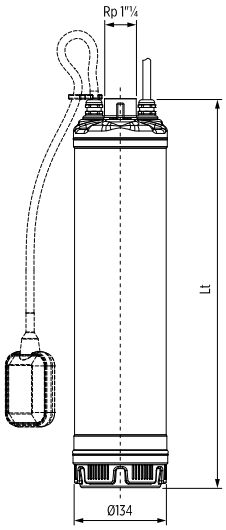


| TYPE | | DIMENSIONS (mm) | | | | | | |
|---|---|---|---|---|---|---|---|---|
| 1~ | 3~ | Lt | DNM | I | L | M | 1~ | 3~ |
| **5PES 3/3** | **5PEST 3/3** | 446 | 1" ¼ G | 720 | 230 | 175 | 12 | 13,3 |
| **5PES 3/4** | **5PEST 3/4** | 470 | | 720 | 230 | 175 | 12,7 | 14 |
| **5PES 3/5** | **5PEST 3/5** | 544 | | 720 | 230 | 175 | 14,3 | 14,5 |
| **5PES 3/6** | **5PEST 3/6** | 568 | | 720 | 230 | 175 | 14,8 | 15 |
| **5PES 3/7** | **5PEST 3/7** | 592 | | 720 | 230 | 175 | 17 | 15,5 |
| **5PES 3/8** | **5PEST 3/8** | 616 | | 720 | 230 | 175 | 17,1 | 16 |

# 5PES 5

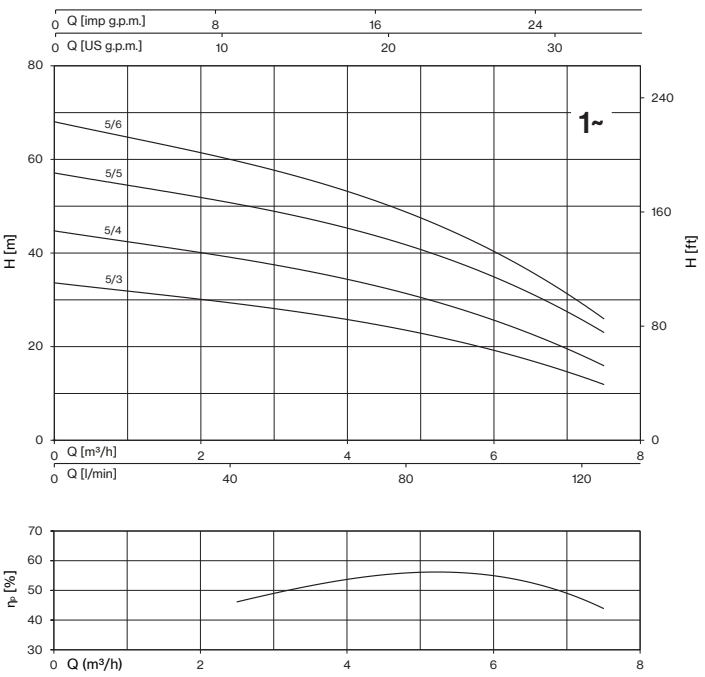


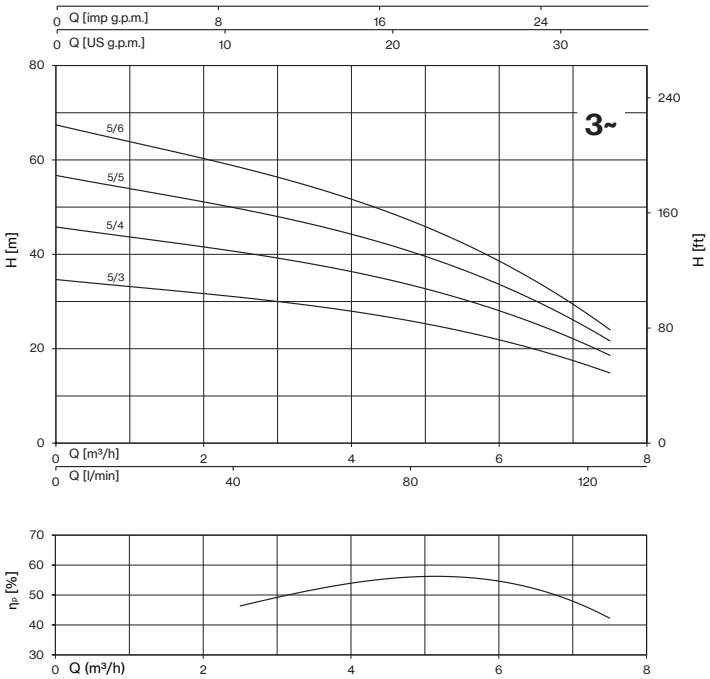


| TYPE - 50 Hz | P2 | | P1 | CURRENT | Q (m³/h - l/min) | | | | | | |
|---|---|---|---|---|---|---|---|---|---|---|---|
| 1~ | | | | 1~ | 0 | 2,5 | 3,0 | 4,5 | 5,0 | 6,0 | 7,5 |
| | | | | 230 V | 0 | 42 | 50,0 | 75,0 | 83 | 100 | 125 |
| | HP | kW | kW | A | H (m) | | | | | | |
| **5PES 5/3** | 0,75 | 0,55 | 0,8 | 4,1 | 33,6 | 29,2 | 28,2 | 24,3 | 22,9 | 19,3 | 11,9 |
| **5PES 5/4** | 1 | 0,75 | 1,1 | 5 | 44,7 | 38,9 | 37,5 | 32,4 | 30,5 | 25,8 | 15,9 |
| **5PES 5/5** | 1,2 | 0,9 | 1,3 | 6,6 | 57,1 | 50,5 | 49 | 42,9 | 40,7 | 35,1 | 23 |
| **5PES 5/6** | 1,5 | 1,1 | 1,6 | 7,4 | 68 | 59,7 | 57,7 | 50,2 | 47,5 | 40,6 | 25,9 |

| TYPE - 50 Hz | P2 | | P1 | CURRENT | Q (m³/h - l/min) | | | | | | |
|---|---|---|---|---|---|---|---|---|---|---|---|
| 3~ | | | | 3~ | 0 | 2,5 | 3,0 | 4,5 | 5,0 | 6,0 | 7,5 |
| | | | | 400 V | 0 | 42 | 50,0 | 75,0 | 83 | 100 | 125 |
| | HP | kW | kW | A | H (m) | | | | | | |
| **5PEST 5/3** | 0,75 | 0,55 | 0,8 | 2 | 34,7 | 30,9 | 30 | 26,6 | 25,3 | 22 | 14,8 |
| **5PEST 5/4** | 1 | 0,75 | 1,1 | 2,2 | 45,8 | 40,5 | 39,3 | 34,4 | 32,7 | 28,2 | 18,5 |
| **5PEST 5/5** | 1,2 | 0,9 | 1,3 | 2,5 | 56,7 | 49,7 | 48 | 41,8 | 39,6 | 33,8 | 21,6 |
| **5PEST 5/6** | 1,5 | 1,1 | 1,6 | 2,7 | 67,4 | 58,5 | 56,4 | 48,6 | 45,9 | 38,8 | 24 |

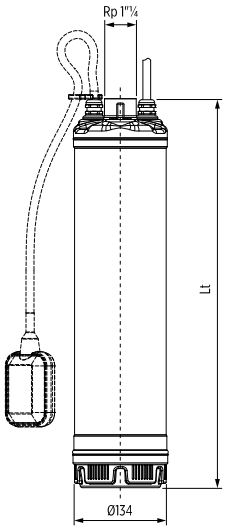


| TYPE | | DIMENSIONS (mm) | | | | | | |
|---|---|---|---|---|---|---|---|---|
| 1~ | 3~ | Lt | DNM | I | L | M | 1~ | 3~ |
| **5PES 5/3** | **5PEST 5/3** | 446 | 1" ¼ G | 720 | 230 | 175 | 12 | 13,3 |
| **5PES 5/4** | **5PEST 5/4** | 470 | | 720 | 230 | 175 | 13,5 | 14 |
| **5PES 5/5** | **5PEST 5/5** | 544 | | 720 | 230 | 175 | 15,7 | 14,5 |
| **5PES 5/6** | **5PEST 5/6** | 568 | | 720 | 230 | 175 | 16,2 | 15 |

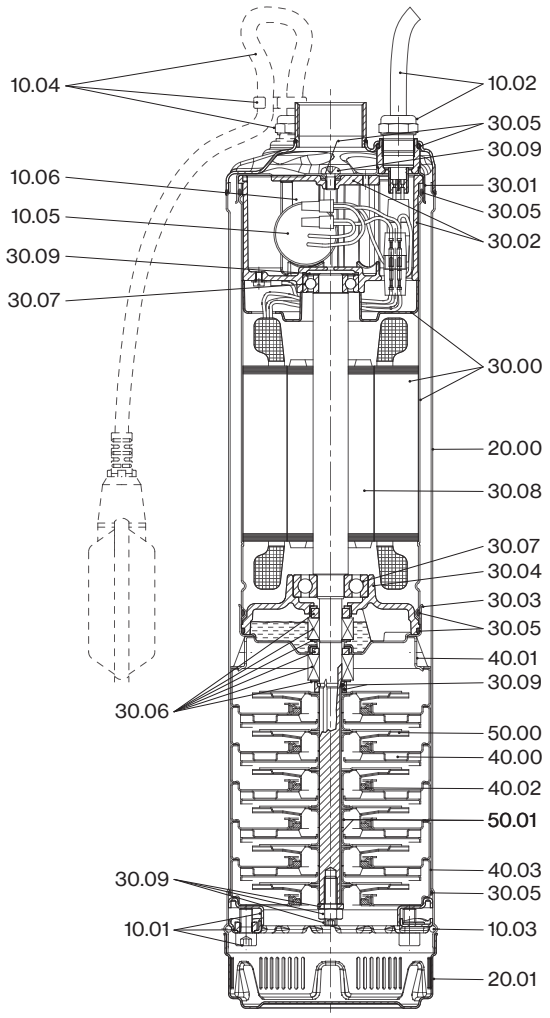


| N. CODE | DESCRIPTION | MATERIAL |
|---|---|---|
| 10.01 | **SCREW AND FLANGES FOR PRE-LOADING** | AISI 304 |
| 10.02 | **CABLE** | H07RN-F |
| 10.02 | **CABLE GLAND** | Nickel plated brass / NBR |
| 10.03 | **SEEGER-RING** | AISI 304 |
| 10.04 | **CABLE** | H07RN-F |
| 10.04 | **FLOAT SWITCH** | PP |
| 10.04 | **HOLDING CABLE PLATE** | PA66 |
| 10.04 | **CABLE GLAND** | Nickel plated brass / NBR |
| 10.05 | **CAPACITOR WITH CABLES AND CONNECTORS** | - |
| 10.06 | **CLAMP FOR CAPACITOR** | - |
| 20.00 | **OUTER CASE** | AISI 304 |
| 20.01 | **SUCTION STRAINER** | AISI 304 |
| 30.00 | **MOTOR HOUSING AND STATOR** | AISI 304 |
| 30.01 | **UPPER MOTOR COVER** | AISI 304 |
| 30.02 | **UPPER BEARING HOUSING WITH COVER** | Aluminum |
| 30.03 | **LOWER MOTOR COVER** | AISI 304 |
| 30.04 | **LOWER BEARING COVER** | Aluminum |
| 30.05 | **O-RING** | NBR |
| 30.06 | **MECHANICAL SEALS** | Ceramic alumina / Carbon Graphite / NBR |
| 30.07 | **BALL BEARINGS** | 6202 2Z-C3 / 6303 2Z-C3 |
| 30.08 | **ROTOR AND PUMP SHAFT** | AISI 304 |
| 30.09 | **SCREWS, NUT AND WASHERS** | AISI 304 / AISI 316 |
| 40.00 | **STAGE HOUSING AND DIFFUSER** | AISI 304 |
| 40.01 | **SPACER** | AISI 304 |
| 40.02 | **FLOATING NECK RING** | PPS |
| 40.03 | **INITIAL STAGE HOUSING** | AISI 304 |
| 50.00 | **IMPELLER** | AISI 304 |
| 50.01 | **IMPELLER SPACERS** | AISI 304 |

# 4E

## Submersible Well Pumps

Designed for 4” wells, the 4E series is highly robust, compact, and patented (EP3274587A1). Engineered for easy maintenance, it features AISI 304 stainless steel supports manufactured via precision lost-wax casting, ensuring exceptional strength and reliability.

Technical Highlights: patented independent floating impellers reduce axial load on the motor. Certified materials for drinking water allow the unit to operate dry without deterioration. Includes an integrated non-return valve.

Operation: discharge outlets are 1” 1/4 G (radial) or 2” G (semi-axial). Max diameter: 98 mm (including cable guard). Suitable for continuous duty in vertical or horizontal positions. Minimum water level: 1m above suction.

Applications: deep well extraction (domestic/industrial), lifting systems, surface/sprinkler irrigation, water supply networks, firefighting, and pressure tank supply.

| Construction features | |
|---|---|
| **Suction and delivery outlet** | stainless steel AISI 304 |
| **External jacket** | stainless steel AISI 304 |
| **Impellers** | POM-C |
| **Diffusers** | POM-C, stainless steel AISI 304 and ceramic |
| **Support bush with sleeve** | POM-C and ceramic |
| **Shaft** | stainless steel AISI 431B |
| **Coupling** | stainless steel AISI 316L |
| **Quantity of sand in the water** | 250 g/m³ |
| **Max liquid temperature** | max 45 °C |
| **Non-return valve** | standard on all models |

## 4E 15

| 50 Hz - 2850 rpm | | | | | | | Q | | | | | |
|---|---|---|---|---|---|---|---|---|---|---|---|---|
| TYPE | P2 | | SUITABLE MOTOR | | | l/min | 0 | 5 | 10 | 15 | 20 | 25 |
| | | | 1~ 230V | | 3~ 400V | l/sec | 0 | 0,08 | 0,17 | 0,25 | 0,33 | 0,42 |
| | HP | kW | A | µF | A | m³/h | 0 | 0,3 | 0,6 | 0,9 | 1,2 | 1,5 |
| **4E 15/12-05** | 0,5 | 0,37 | 3,6 | 20 | 1,6 | H (m) | 85 | 80 | 72 | 61 | 44 | 18 |
| **4E 15/18-07** | 0,75 | 0,55 | 4,5 | 25 | 2 | | 128 | 120 | 107 | 91 | 66 | 26 |
| **4E 15/24-10** | 1 | 0,75 | 6 | 35 | 2,6 | | 170 | 160 | 143 | 121 | 88 | 35 |
| **4E 15/36-15** | 1,5 | 1,1 | 8,2 | 40 | 3,4 | | 255 | 240 | 215 | 182 | 131 | 53 |
| **4E 15/48-20** | 2 | 1,5 | 11 | 50 | 4,6 | | 340 | 320 | 286 | 242 | 175 | 70 |

*MEI ≥ 0,7 (regulation EU N. 547/2012)*

| | |
|---|---|
| **Max Eff. %** | 43,2 |
| **Max kW / St.** | 0,031 |

## 4E 20

| 50 Hz - 2850 rpm | | | | | | | Q | | | | | | |
|---|---|---|---|---|---|---|---|---|---|---|---|---|---|
| TYPE | P2 | | SUITABLE MOTOR | | | l/min | 0 | 15 | 20 | 25 | 30 | 35 | 40 |
| | | | 1~ 230V | | 3~ 400V | l/sec | 0 | 0,25 | 0,33 | 0,42 | 0,5 | 0,58 | 0,67 |
| | HP | kW | A | µF | A | m³/h | 0,0 | 0,9 | 1,2 | 1,5 | 1,8 | 2,1 | 2,4 |
| **4E 20/09-05** | 0,5 | 0,37 | 3,6 | 20 | 1,6 | H (m) | 60 | 56 | 50 | 43 | 35 | 26 | 15 |
| **4E 20/14-07** | 0,75 | 0,55 | 4,5 | 25 | 2 | | 92 | 85 | 76 | 66 | 54 | 40 | 23 |
| **4E 20/19-10** | 1 | 0,75 | 6 | 35 | 2,6 | | 122 | 112 | 101 | 86 | 71 | 53 | 30 |
| **4E 20/28-15** | 1,5 | 1,1 | 8,2 | 40 | 3,4 | | 176 | 161 | 145 | 125 | 103 | 77 | 44 |
| **4E 20/38-20** | 2 | 1,5 | 11 | 50 | 4,6 | | 231 | 212 | 191 | 164 | 135 | 101 | 58 |
| **4E 20/54-30** | 3 | 2,2 | 14,8 | 70 | 6,2 | | 318 | 292 | 263 | 226 | 186 | 139 | 79 |

*MEI ≥ 0,7 (regulation EU N. 547/2012)*

| | |
|---|---|
| **Max Eff. %** | 52,5 |
| **Max kW / St.** | 0,039 |

## 4E 30

| 50 Hz - 2850 rpm | | | | | | | Q | | | | | | | | |
|---|---|---|---|---|---|---|---|---|---|---|---|---|---|---|---|
| TYPE | P2 | | SUITABLE MOTOR | | | l/min | 0 | 15 | 20 | 25 | 30 | 35 | 40 | 45 | 50 |
| | | | 1~ 230V | | 3~ 400V | l/sec | 0 | 0,25 | 0,33 | 0,42 | 0,50 | 0,58 | 0,67 | 0,75 | 0,83 |
| | HP | kW | A | µF | A | m³/h | 0 | 0,9 | 1,2 | 1,5 | 1,8 | 2,1 | 2,4 | 2,7 | 3,0 |
| **4E 30/08-05** | 0,5 | 0,37 | 3,6 | 20 | 1,6 | H (m) | 55 | 51 | 48 | 44 | 39 | 33 | 26 | 18 | 8 |
| **4E 30/12-07** | 0,75 | 0,55 | 4,5 | 25 | 2 | | 83 | 76 | 72 | 66 | 58 | 49 | 39 | 27 | 12 |
| **4E 30/16-10** | 1 | 0,75 | 6 | 35 | 2,6 | | 110 | 101 | 96 | 88 | 78 | 66 | 52 | 36 | 16 |
| **4E 30/23-15** | 1,5 | 1,1 | 8,2 | 40 | 3,4 | | 154 | 141 | 133 | 123 | 109 | 92 | 72 | 51 | 23 |
| **4E 30/32-20** | 2 | 1,5 | 11 | 50 | 4,6 | | 214 | 197 | 186 | 171 | 151 | 128 | 101 | 70 | 32 |
| **4E 30/45-30** | 3 | 2,2 | 14,8 | 70 | 6,2 | | 302 | 277 | 261 | 241 | 213 | 180 | 142 | 99 | 45 |
| **4E 30/60-40** | 4 | 3 | - | - | 7,8 | | 402 | 369 | 348 | 321 | 284 | 240 | 189 | 132 | 60 |

*MEI ≥ 0,7 (regulation EU N. 547/2012)*

| | |
|---|---|
| **Max Eff. %** | 53,4 |
| **Max kW / St.** | 0,047 |

# 4E

## 4E 35

| 50 Hz - 2850 rpm | | | | | | | Q | | | | | | | | |
|---|---|---|---|---|---|---|---|---|---|---|---|---|---|---|---|
| TYPE | P2 | | SUITABLE MOTOR | | | l/min | 0 | 20 | 25 | 30 | 35 | 40 | 45 | 50 | 55 |
| | | | 1~ 230V | | 3~ 400V | l/sec | 0 | 0,33 | 0,42 | 0,50 | 0,58 | 0,67 | 0,75 | 0,83 | 0,92 |
| | HP | kW | A | µF | A | m³/h | 0 | 1,2 | 1,5 | 1,8 | 2,1 | 2,4 | 2,7 | 3,0 | 3,3 |
| **4E 35/07-05** | 0,5 | 0,37 | 3,6 | 20 | 1,6 | H (m) | 47 | 42 | 39 | 36 | 33 | 28 | 23 | 18 | 12 |
| **4E 35/11-07** | 0,75 | 0,55 | 4,5 | 25 | 2 | | 74 | 66 | 62 | 57 | 52 | 45 | 37 | 28 | 18 |
| **4E 35/15-10** | 1 | 0,75 | 6 | 35 | 2,6 | | 98 | 87 | 82 | 76 | 68 | 59 | 49 | 37 | 24 |
| **4E 35/22-15** | 1,5 | 1,1 | 8,2 | 40 | 3,4 | | 140 | 125 | 118 | 109 | 98 | 85 | 70 | 54 | 35 |
| **4E 35/30-20** | 2 | 1,5 | 11 | 50 | 4,6 | | 191 | 171 | 161 | 148 | 134 | 116 | 96 | 73 | 47 |
| **4E 35/42-30** | 3 | 2,2 | 14,8 | 70 | 6,2 | | 273 | 244 | 229 | 212 | 191 | 166 | 137 | 104 | 67 |
| **4E 35/57-40** | 4 | 3 | - | - | 7,8 | | 367 | 327 | 308 | 285 | 257 | 223 | 184 | 140 | 91 |

*MEI ≥ 0,7 (regulation EU N. 547/2012)*

| | |
|---|---|
| **Max Eff. %** | 57,8 |
| **Max kW / St.** | 0,05 |

## 4E 45

| 50 Hz - 2850 rpm | | | | | | | Q | | | | | | | | | |
|---|---|---|---|---|---|---|---|---|---|---|---|---|---|---|---|---|
| TYPE | P2 | | SUITABLE MOTOR | | | l/min | 0 | 30 | 35 | 40 | 45 | 50 | 55 | 60 | 65 | 70 |
| | | | 1~ 230V | | 3~ 400V | l/sec | 0 | 0,50 | 0,58 | 0,67 | 0,75 | 0,83 | 0,92 | 1,00 | 1,08 | 1,17 |
| | HP | kW | A | µF | A | m³/h | 0 | 1,8 | 2,1 | 2,4 | 2,7 | 3,0 | 3,3 | 3,6 | 3,9 | 4,2 |
| **4E 45/06-05** | 0,5 | 0,37 | 3,6 | 20 | 1,6 | H (m) | 41 | 37 | 35 | 33 | 30 | 27 | 24 | 20 | 16 | 12 |
| **4E 45/09-07** | 0,75 | 0,55 | 4,5 | 25 | 2 | | 62 | 55 | 52 | 49 | 45 | 41 | 36 | 31 | 25 | 18 |
| **4E 45/12-10** | 1 | 0,75 | 6 | 35 | 2,6 | | 80 | 72 | 68 | 64 | 59 | 53 | 47 | 40 | 32 | 23 |
| **4E 45/18-15** | 1,5 | 1,1 | 8,2 | 40 | 3,4 | | 120 | 107 | 102 | 96 | 88 | 80 | 70 | 59 | 48 | 35 |
| **4E 45/24-20** | 2 | 1,5 | 11 | 50 | 4,6 | | 160 | 143 | 136 | 128 | 118 | 106 | 93 | 79 | 64 | 47 |
| **4E 45/36-30** | 3 | 2,2 | 14,8 | 70 | 6,2 | | 240 | 215 | 204 | 191 | 176 | 159 | 140 | 119 | 95 | 70 |
| **4E 45/48-40** | 4 | 3 | - | - | 7,8 | | 320 | 286 | 272 | 255 | 235 | 212 | 186 | 158 | 127 | 94 |
| **4E 45/63-55** | 5,5 | 4 | - | - | 9,9 | | 420 | 375 | 357 | 335 | 309 | 278 | 244 | 207 | 167 | 123 |

*MEI ≥ 0,7 (regulation EU N. 547/2012)*

| | |
|---|---|
| **Max Eff. %** | 64 |
| **Max kW / St.** | 0,062 |

## 4E 55

| 50 Hz - 2850 rpm | | | | | | | Q | | | | | | | |
|---|---|---|---|---|---|---|---|---|---|---|---|---|---|---|
| TYPE | P2 | | SUITABLE MOTOR | | | l/min | 0 | 45 | 50 | 55 | 60 | 65 | 70 | 80 |
| | | | 1~ 230V | | 3~ 400V | l/sec | 0 | 0,75 | 0,83 | 0,92 | 1,00 | 1,08 | 1,17 | 1,33 |
| | HP | kW | A | µF | A | m³/h | 0 | 2,7 | 3,0 | 3,3 | 3,6 | 3,9 | 4,2 | 4,8 |
| **4E 55/05-05** | 0,5 | 0,37 | 3,6 | 20 | 1,6 | H (m) | 33 | 28 | 27 | 25 | 23 | 21 | 19 | 13 |
| **4E 55/07-07** | 0,75 | 0,55 | 4,5 | 25 | 2 | | 47 | 40 | 37 | 35 | 32 | 29 | 26 | 18 |
| **4E 55/10-10** | 1 | 0,75 | 6 | 35 | 2,6 | | 67 | 57 | 54 | 50 | 46 | 42 | 37 | 26 |
| **4E 55/15-15** | 1,5 | 1,1 | 8,2 | 40 | 3,4 | | 100 | 85 | 80 | 75 | 70 | 63 | 56 | 39 |
| **4E 55/20-20** | 2 | 1,5 | 11 | 50 | 4,6 | | 130 | 110 | 104 | 97 | 90 | 81 | 72 | 50 |
| **4E 55/30-30** | 3 | 2,2 | 14,8 | 70 | 6,2 | | 195 | 165 | 156 | 146 | 135 | 122 | 108 | 75 |
| **4E 55/40-40** | 4 | 3 | - | - | 7,8 | | 260 | 220 | 208 | 195 | 180 | 162 | 144 | 100 |
| **4E 55/54-55** | 5,5 | 4 | - | - | 9,9 | | 351 | 296 | 281 | 263 | 243 | 219 | 194 | 135 |

*MEI ≥ 0,7 (regulation EU N. 547/2012)*

| | |
|---|---|
| **Max Eff. %** | 64,8 |
| **Max kW / St.** | 0,760 |

## 4E 70

| 50 Hz - 2850 rpm | | | | | | | Q | | | | | | | | | |
|---|---|---|---|---|---|---|---|---|---|---|---|---|---|---|---|---|
| TYPE | P2 | | SUITABLE MOTOR | | | l/min | 0 | 50 | 55 | 60 | 65 | 70 | 80 | 90 | 100 | 110 |
| | | | 1~ 230V | | 3~ 400V | l/sec | 0 | 0,83 | 0,92 | 1,00 | 1,08 | 1,17 | 1,33 | 1,50 | 1,67 | 1,83 |
| | HP | kW | A | µF | A | m³/h | 0 | 3,0 | 3,3 | 3,6 | 3,9 | 4,2 | 4,8 | 5,4 | 6,0 | 6,6 |
| **4E 70/04-05** | 0,5 | 0,37 | 3,6 | 20 | 1,6 | H (m) | 28 | 25 | 24 | 23 | 22 | 20 | 17 | 14 | 10 | 6 |
| **4E 70/06-07** | 0,75 | 0,55 | 4,5 | 25 | 2 | | 41 | 37 | 36 | 34 | 33 | 31 | 26 | 20 | 15 | 8 |
| **4E 70/08-10** | 1 | 0,75 | 6 | 35 | 2,6 | | 55 | 49 | 48 | 46 | 44 | 41 | 34 | 27 | 19 | 11 |
| **4E 70/12-15** | 1,5 | 1,1 | 8,2 | 40 | 3,4 | | 83 | 74 | 72 | 69 | 65 | 61 | 52 | 41 | 29 | 17 |
| **4E 70/16-20** | 2 | 1,5 | 11 | 50 | 4,6 | | 111 | 99 | 95 | 92 | 87 | 82 | 69 | 54 | 39 | 22 |
| **4E 70/24-30** | 3 | 2,2 | 14,8 | 70 | 6,2 | | 166 | 148 | 143 | 138 | 131 | 123 | 103 | 81 | 58 | 34 |
| **4E 70/32-40** | 4 | 3 | - | - | 7,8 | | 221 | 197 | 191 | 183 | 174 | 164 | 138 | 108 | 78 | 45 |
| **4E 70/42-55** | 5,5 | 4 | - | - | 9,9 | | 290 | 259 | 250 | 241 | 229 | 215 | 181 | 142 | 102 | 59 |
| **4E 70/57-75** | 7,5 | 5,5 | - | - | 13,8 | | 402 | 358 | 347 | 333 | 317 | 297 | 251 | 197 | 141 | 81 |
| **4E 70/76-100** | 10 | 7,5 | - | - | 19,5 | | 536 | 478 | 462 | 444 | 422 | 396 | 334 | 263 | 188 | 109 |
| **4E 70/95-125** | 12,5 | 9,3 | - | - | - | | 670 | 597 | 578 | 555 | 528 | 495 | 418 | 328 | 235 | 136 |

*MEI ≥ 0,7 (regulation EU N. 547/2012)*

| | |
|---|---|
| **Max Eff. %** | 66,8 |
| **Max kW / St.** | 0,920 |

## 4E 100

| 50 Hz - 2850 rpm | | | | | | | Q | | | | | | | |
|---|---|---|---|---|---|---|---|---|---|---|---|---|---|---|
| TYPE | P2 | | SUITABLE MOTOR | | | l/min | 0 | 80 | 90 | 100 | 110 | 125 | 150 | 175 |
| | | | 1~ 230V | | 3~ 400V | l/sec | 0 | 1,33 | 1,50 | 1,67 | 1,83 | 2,08 | 2,50 | 2,92 |
| | HP | kW | A | µF | A | m³/h | 0 | 4,8 | 5,4 | 6,0 | 6,6 | 7,5 | 9,0 | 10,5 |
| **4E 100/04-07** | 0,75 | 0,55 | 4,5 | 25 | 2 | H (m) | 29 | 23 | 22 | 21 | 19 | 17 | 12 | 6 |
| **4E 100/06-10** | 1 | 0,75 | 6 | 35 | 2,6 | | 43 | 34 | 32 | 30 | 29 | 25 | 18 | 9 |
| **4E 100/09-15** | 1,5 | 1,1 | 8,2 | 40 | 3,4 | | 64 | 50 | 48 | 45 | 42 | 37 | 26 | 14 |
| **4E 100/12-20** | 2 | 1,5 | 11 | 50 | 4,6 | | 84 | 65 | 62 | 59 | 55 | 49 | 34 | 18 |
| **4E 100/17-30** | 3 | 2,2 | 14,8 | 70 | 6,2 | | 119 | 92 | 88 | 84 | 79 | 69 | 48 | 26 |
| **4E 100/23-40** | 4 | 3 | - | - | 7,8 | | 161 | 125 | 120 | 113 | 106 | 94 | 66 | 35 |
| **4E 100/31-55** | 5,5 | 4 | - | - | 9,9 | | 217 | 169 | 161 | 153 | 143 | 126 | 88 | 47 |
| **4E 100/39-75** | 7,5 | 5,5 | - | - | 13,8 | | 273 | 212 | 203 | 192 | 180 | 159 | 111 | 59 |
| **4E 100/54-100** | 10 | 7,5 | - | - | 19,5 | | 378 | 294 | 281 | 266 | 249 | 220 | 154 | 81 |

*MEI ≥ 0,7 (regulation EU N. 547/2012)*

| | |
|---|---|
| **Max Eff. %** | 69,9 |
| **Max kW / St.** | 0,124 |

## 4E 150

| 50 Hz - 2850 rpm | | | | | | | Q | | | | | | | | |
|---|---|---|---|---|---|---|---|---|---|---|---|---|---|---|---|
| TYPE | P2 | | SUITABLE MOTOR | | | l/min | 0 | 100 | 110 | 125 | 150 | 175 | 200 | 225 | 250 |
| | | | 1~ 230V | | 3~ 400V | l/sec | 0 | 1,67 | 1,83 | 2,08 | 2,50 | 2,92 | 3,33 | 3,75 | 4,17 |
| | HP | kW | A | µF | A | m³/h | 0 | 6,0 | 6,6 | 7,5 | 9,0 | 10,5 | 12,0 | 13,5 | 15,0 |
| **4E 150/04-10** | 1 | 0,75 | 6 | 35 | 2,6 | H (m) | 27 | 24 | 23 | 22 | 20 | 17 | 13 | 8 | 3 |
| **4E 150/06-15** | 1,5 | 1,1 | 8,2 | 40 | 3,4 | | 41 | 36 | 35 | 33 | 30 | 26 | 20 | 13 | 5 |
| **4E 150/08-20** | 2 | 1,5 | 11 | 50 | 4,6 | | 55 | 48 | 47 | 45 | 40 | 34 | 27 | 17 | 6 |
| **4E 150/12-30** | 3 | 2,2 | 14,8 | 70 | 6,2 | | 82 | 72 | 70 | 67 | 60 | 51 | 40 | 25 | 10 |
| **4E 150/15-40** | 4 | 3 | - | - | 7,8 | | 103 | 90 | 88 | 84 | 75 | 64 | 50 | 32 | 12 |
| **4E 150/21-55** | 5,5 | 4 | - | - | 9,9 | | 144 | 126 | 123 | 117 | 105 | 89 | 70 | 44 | 17 |
| **4E 150/28-75** | 7,5 | 5,5 | - | - | 13,8 | | 196 | 171 | 167 | 159 | 143 | 121 | 95 | 60 | 23 |
| **4E 150/38-100** | 10 | 7,5 | - | - | 19,5 | | 263 | 230 | 225 | 214 | 192 | 163 | 127 | 81 | 31 |

*MEI ≥ 0,7 (regulation EU N. 547/2012)*

| | |
|---|---|
| **Max Eff. %** | 67,9 |
| **Max kW / St.** | 0,184 |

## 4E 225

| 50 Hz - 2850 rpm | | | | | | | Q | | | | | | | | | | | |
|---|---|---|---|---|---|---|---|---|---|---|---|---|---|---|---|---|---|---|
| TYPE | P2 | | SUITABLE MOTOR | | | l/min | 0 | 100 | 110 | 125 | 150 | 175 | 200 | 225 | 250 | 275 | 300 | 325 |
| | | | 1~ 230V | | 3~ 400V | l/sec | 0 | 1,67 | 1,83 | 2,08 | 2,50 | 2,92 | 3,33 | 3,75 | 4,17 | 4,58 | 5,00 | 5,42 |
| | HP | kW | A | µF | A | m³/h | 0 | 6,0 | 6,6 | 7,5 | 9,0 | 10,5 | 12,0 | 13,5 | 15,0 | 16,5 | 18,0 | 19,5 |
| **4E 225/05-15** | 1,5 | 1,1 | 8,2 | 40 | 3,4 | H (m) | 33 | 29 | 28 | 28 | 26 | 24 | 22 | 20 | 17 | 14 | 10 | 5 |
| **4E 225/07-20** | 2 | 1,5 | 11 | 50 | 4,6 | | 46 | 40 | 40 | 39 | 36 | 34 | 31 | 28 | 24 | 19 | 13 | 7 |
| **4E 225/10-30** | 3 | 2,2 | 14,8 | 70 | 6,2 | | 65 | 58 | 57 | 55 | 52 | 48 | 44 | 40 | 34 | 28 | 19 | 10 |
| **4E 225/14-40** | 4 | 3 | - | - | 7,8 | | 91 | 81 | 80 | 77 | 73 | 67 | 62 | 55 | 48 | 39 | 27 | 14 |
| **4E 225/18-55** | 5,5 | 4 | - | - | 9,9 | | 117 | 104 | 102 | 99 | 94 | 87 | 79 | 71 | 61 | 50 | 34 | 18 |
| **4E 225/25-75** | 7,5 | 5,5 | - | - | 13,8 | | 163 | 145 | 142 | 138 | 130 | 121 | 110 | 99 | 85 | 69 | 48 | 25 |
| **4E 225/34-100** | 10 | 7,5 | - | - | 19,5 | | 221 | 197 | 193 | 188 | 177 | 164 | 150 | 134 | 116 | 94 | 65 | 34 |

*MEI ≥ 0,7 (regolamento UE N. 547/2012)*

| | |
|---|---|
| **Max Eff. %** | 68,2 |
| **Max kW / St.** | 0,22 |

## 4E 300

| 50 Hz - 2850 rpm | | | | | | | Q | | | | | | | | | | | | | |
|---|---|---|---|---|---|---|---|---|---|---|---|---|---|---|---|---|---|---|---|---|
| TYPE | P2 | | SUITABLE MOTOR | | | l/min | 0 | 150 | 175 | 200 | 225 | 250 | 275 | 300 | 325 | 350 | 375 | 400 | 425 | 450 |
| | | | 1~ 230V | | 3~ 400V | l/sec | 0 | 2,50 | 2,92 | 3,33 | 3,75 | 4,17 | 4,58 | 5,00 | 5,42 | 5,83 | 6,25 | 6,67 | 7,08 | 7,50 |
| | HP | kW | A | µF | A | m³/h | 0 | 9,0 | 10,5 | 12,0 | 13,5 | 15,0 | 16,5 | 18,0 | 19,5 | 21,0 | 22,5 | 24,0 | 25,5 | 27,0 |
| **4E 300/04-15** | 1,5 | 1,1 | 8,2 | 40 | 3,4 | H (m) | 23 | 19 | 18 | 17 | 16 | 15 | 14 | 13 | 12 | 11 | 9 | 8 | 6 | 4 |
| **4E 300/06-20** | 2 | 1,5 | 11 | 50 | 4,6 | | 35 | 29 | 27 | 25 | 24 | 23 | 21 | 20 | 18 | 16 | 14 | 11 | 9 | 5 |
| **4E 300/09-30** | 3 | 2,2 | 14,8 | 70 | 6,2 | | 52 | 43 | 40 | 38 | 36 | 34 | 32 | 30 | 28 | 24 | 21 | 17 | 13 | 8 |
| **4E 300/12-40** | 4 | 3 | - | - | 7,8 | | 69 | 57 | 54 | 51 | 48 | 45 | 43 | 40 | 37 | 33 | 28 | 23 | 17 | 11 |
| **4E 300/16-55** | 5,5 | 4 | - | - | 9,9 | | 92 | 76 | 72 | 68 | 64 | 60 | 57 | 53 | 49 | 44 | 37 | 30 | 23 | 14 |
| **4E 300/22-75** | 7,5 | 5,5 | - | - | 13,8 | | 127 | 105 | 98 | 93 | 88 | 83 | 78 | 73 | 67 | 60 | 51 | 42 | 32 | 20 |
| **4E 300/30-100** | 10 | 7,5 | - | - | 19,5 | | 173 | 143 | 134 | 127 | 120 | 113 | 107 | 100 | 92 | 82 | 70 | 57 | 43 | 27 |
| **4E 300/38-125** | 12,5 | 9,3 | - | - | - | | 220 | 181 | 170 | 160 | 152 | 144 | 135 | 127 | 116 | 103 | 89 | 72 | 55 | 34 |

*MEI ≥ 0,7 (regolamento UE N. 547/2012)*

| | |
|---|---|
| **Max Eff. %** | 73,6 |
| **Max kW / St.** | 0,25 |

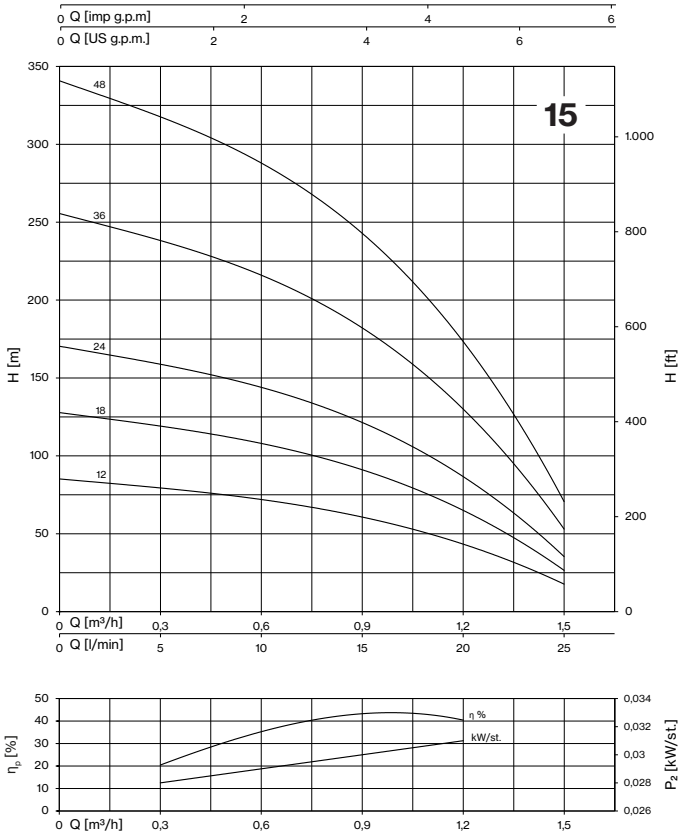
15
Q [imp g.p.m]
Q [US g.p.m.]
H [m]
H [ft]
48
36
24
18
12
Q [m³/h]
Q [l/min]
η %
kW/st.
$\eta_p$ [%]
$P_2$ [kW/st.]

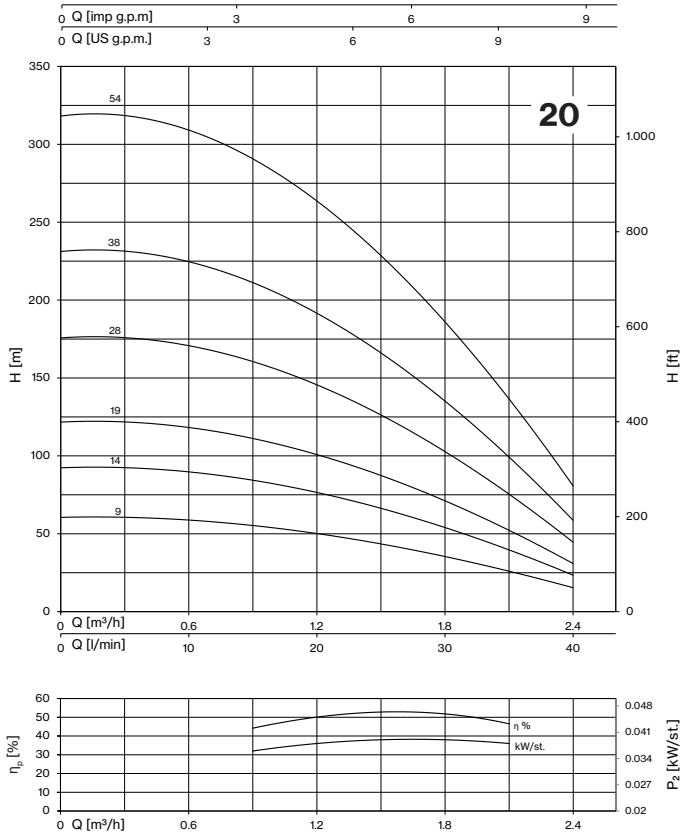
20
Q [imp g.p.m]
Q [US g.p.m.]
H [m]
H [ft]
54
38
28
19
14
9
Q [m³/h]
Q [l/min]
η %
kW/st.
$\eta_p$ [%]
$P_2$ [kW/st.]

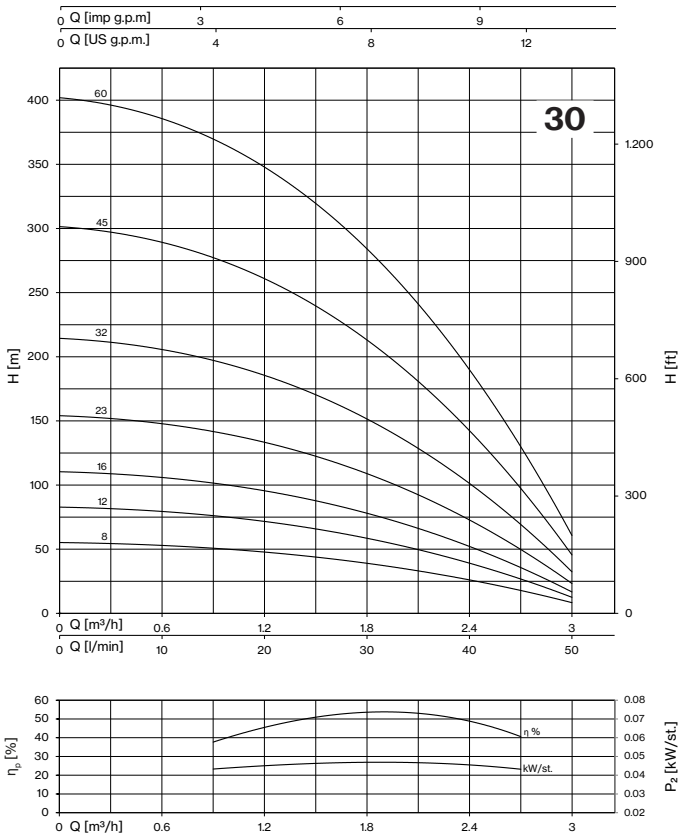
30
Q [imp g.p.m]
Q [US g.p.m.]
H [m]
H [ft]
60
45
32
23
16
12
8
Q [m³/h]
Q [l/min]
η %
kW/st.
$\eta_p$ [%]
$P_2$ [kW/st.]

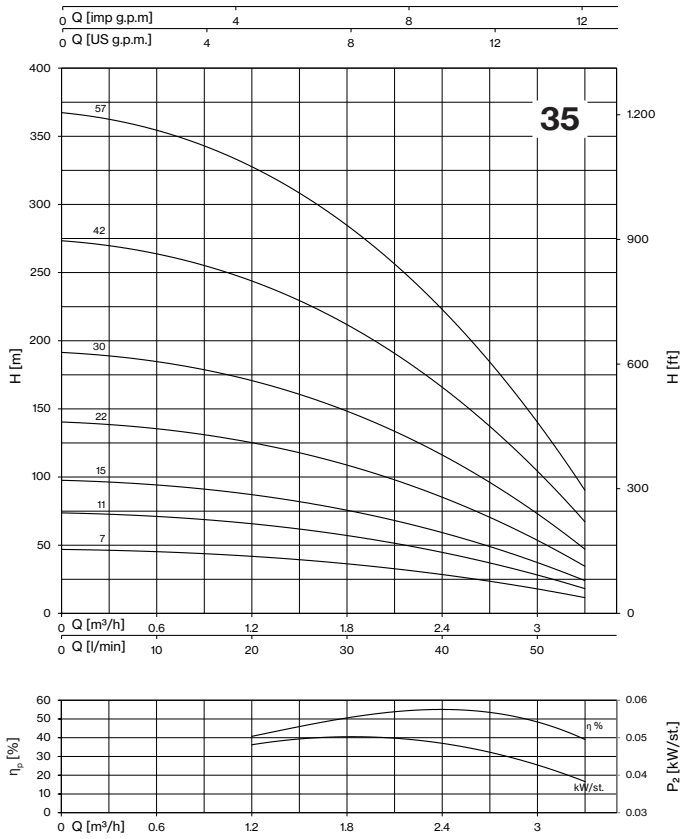
35
Q [imp g.p.m]
Q [US g.p.m.]
H [m]
H [ft]
57
42
30
22
15
11
7
Q [m³/h]
Q [l/min]
η %
kW/st.
$\eta_p$ [%]
$P_2$ [kW/st.]

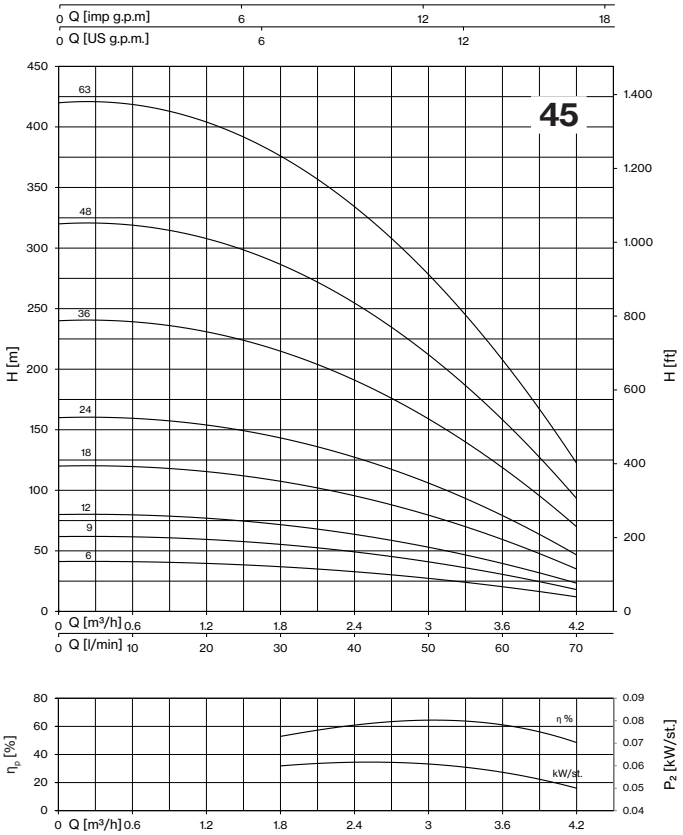
45
Q [imp g.p.m]
Q [US g.p.m.]
H [m]
H [ft]
Q [m³/h]
Q [l/min]
η %
kW/st.
$\eta_p$ [%]
$P_2$ [kW/st.]

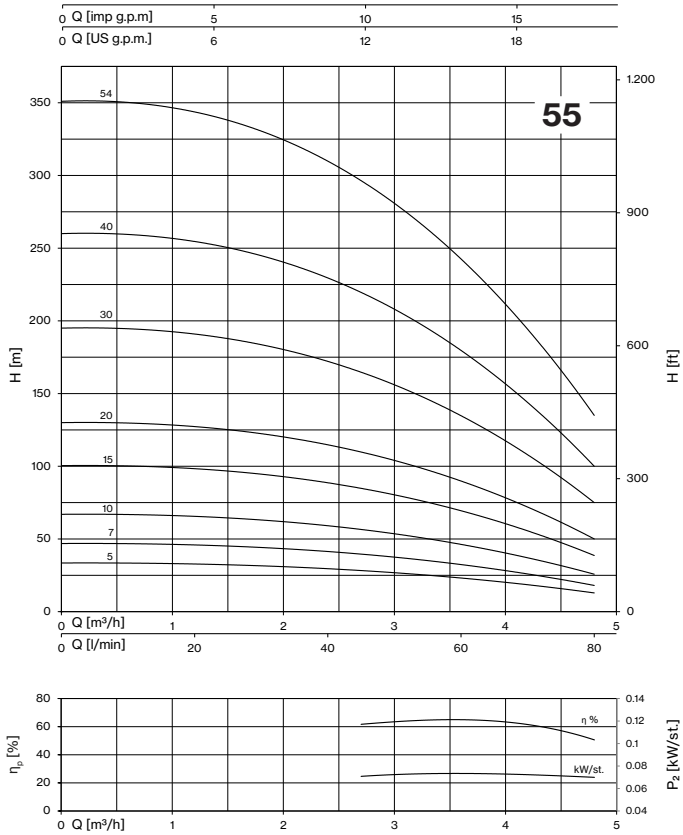
55
Q [imp g.p.m]
Q [US g.p.m.]
H [m]
H [ft]
Q [m³/h]
Q [l/min]
η %
kW/st.
$\eta_p$ [%]
$P_2$ [kW/st.]

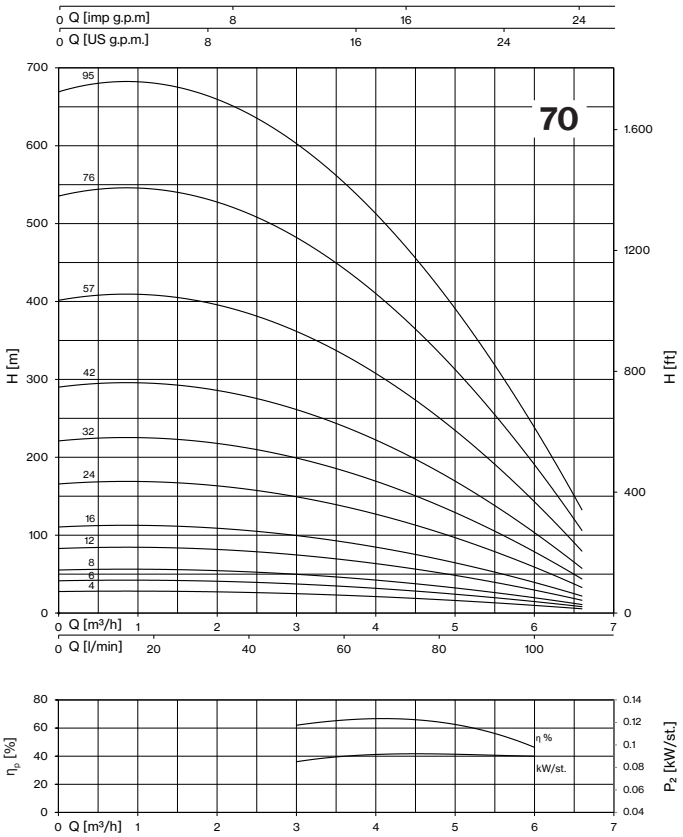
70
Q [imp g.p.m]
Q [US g.p.m.]
H [m]
H [ft]
Q [m³/h]
Q [l/min]
η %
kW/st.
$\eta_p$ [%]
$P_2$ [kW/st.]

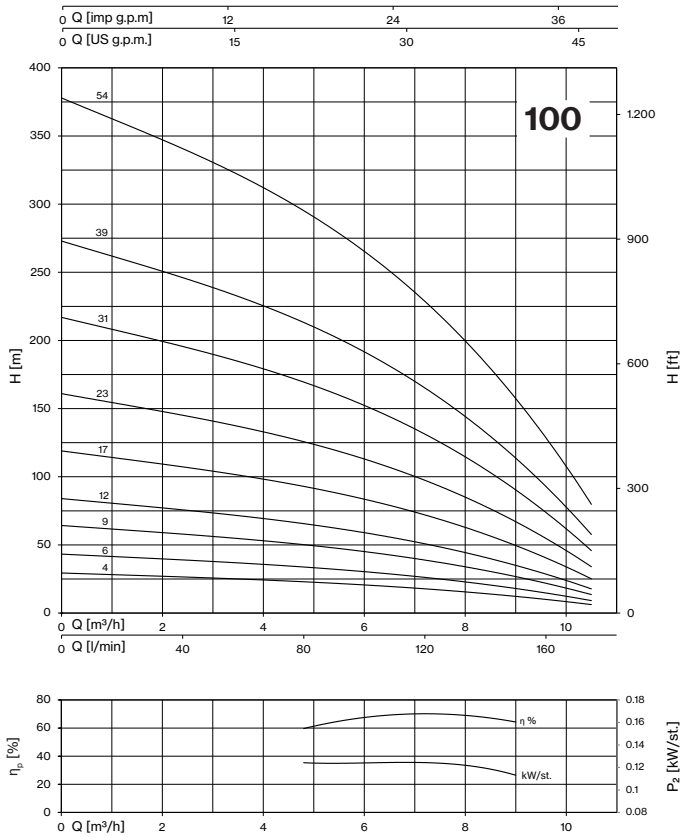
100
Q [imp g.p.m]
Q [US g.p.m.]
H [m]
H [ft]
Q [m³/h]
Q [l/min]
η %
kW/st.
$\eta_p$ [%]
$P_2$ [kW/st.]

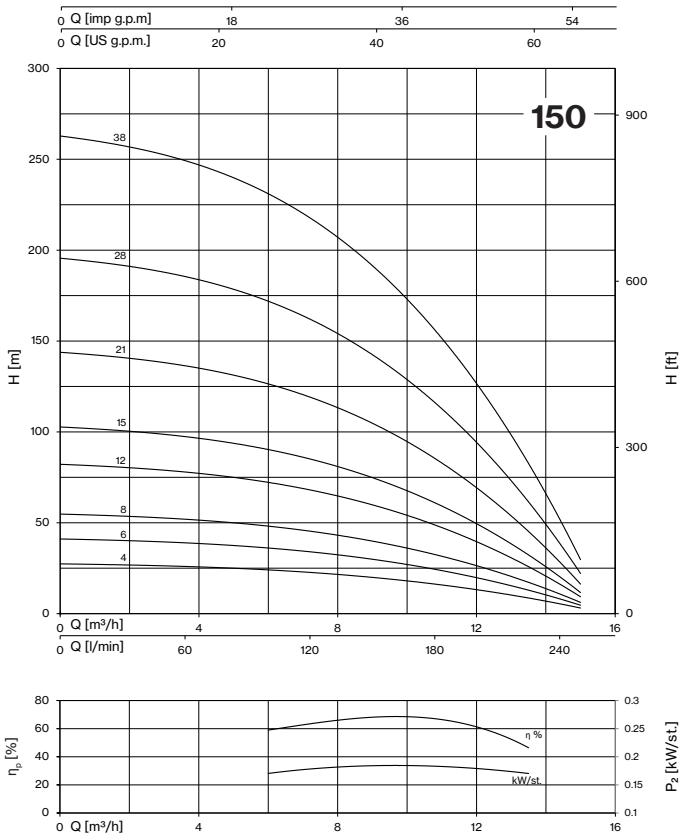
150
Q [imp g.p.m]
Q [US g.p.m.]
H [m]
H [ft]
Q [m³/h]
Q [l/min]
38
28
21
15
12
8
6
4
η %
kW/st.
$\eta_p$ [%]
$P_2$ [kW/st.]

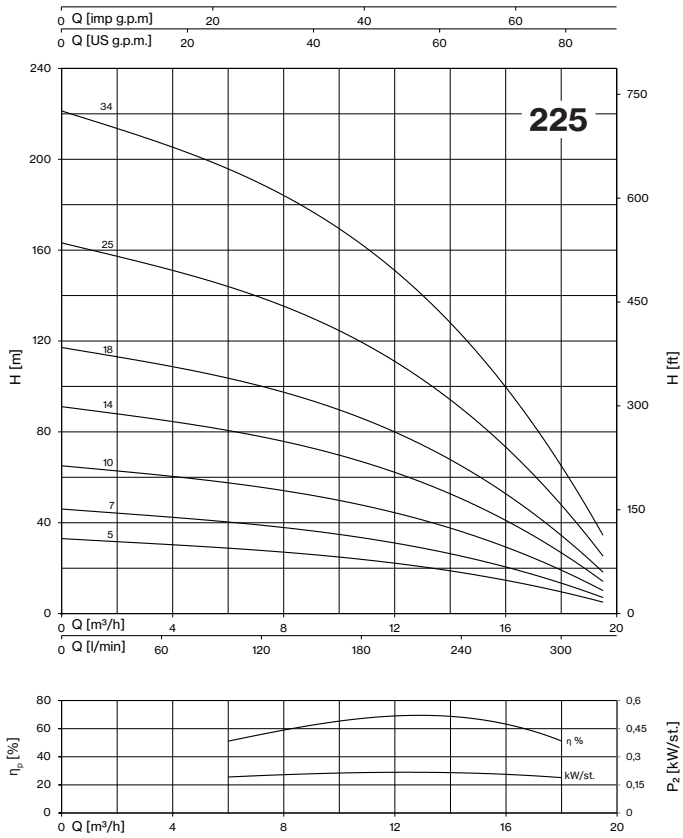
225
Q [imp g.p.m]
Q [US g.p.m.]
H [m]
H [ft]
Q [m³/h]
Q [l/min]
34
25
18
14
10
7
5
η %
kW/st.
$\eta_p$ [%]
$P_2$ [kW/st.]

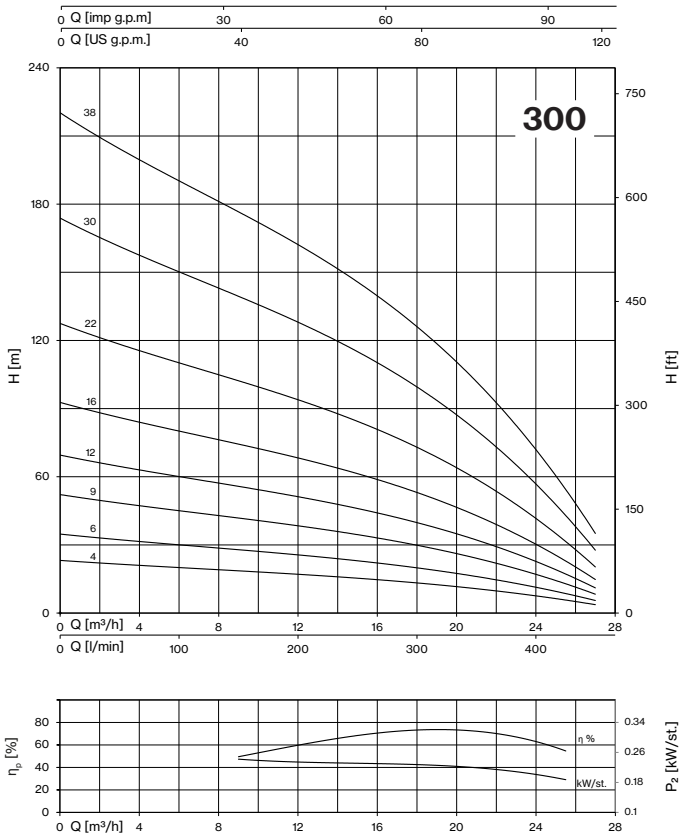
300
Q [imp g.p.m]
Q [US g.p.m.]
H [m]
H [ft]
Q [m³/h]
Q [l/min]
38
30
22
16
12
9
6
4
η %
kW/st.
$\eta_p$ [%]
$P_2$ [kW/st.]

# 4E

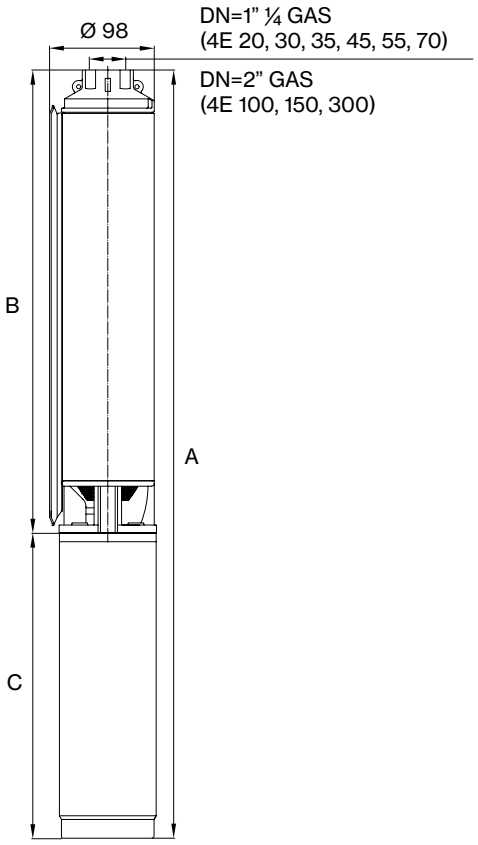


## 4E 15

| TYPE | DIMENSIONS (mm) | | | | | WEIGHT (kg) | | | | |
|---|---|---|---|---|---|---|---|---|---|---|
| | A (1~) | A (3~) | B | C (1~) | C (3~) | A (1~) | A (3~) | B | C (1~) | C (3~) |
| **4E 15/12-05** | 701 | 701 | 376 | 325 | 325 | 11 | 10,5 | 4 | 7 | 6,5 |
| **4E 15/18-07** | 820 | 820 | 495 | 325 | 325 | 12,8 | 12,2 | 5,2 | 7,6 | 7 |
| **4E 15/24-10** | 1000 | 975 | 650 | 350 | 325 | 15,6 | 14,5 | 6,9 | 8,7 | 7,6 |
| **4E 15/36-15** | 1273 | 1238 | 888 | 385 | 350 | 19,7 | 18,1 | 9,4 | 10,3 | 8,7 |
| **4E 15/48-20** | 1581 | 1546 | 1161 | 420 | 385 | 24,3 | 22,7 | 12,3 | 12 | 10,4 |

## 4E 20

| TYPE | DIMENSIONS (mm) | | | | | WEIGHT (kg) | | | | |
|---|---|---|---|---|---|---|---|---|---|---|
| | A (1~) | A (3~) | B | C (1~) | C (3~) | A (1~) | A (3~) | B | C (1~) | C (3~) |
| **4E 20/09-05** | 641 | 641 | 316 | 325 | 325 | 10,3 | 9,8 | 3,3 | 7 | 6,5 |
| **4E 20/14-07** | 741 | 741 | 416 | 325 | 325 | 12 | 11,4 | 4,4 | 7,6 | 7 |
| **4E 20/19-10** | 866 | 841 | 516 | 350 | 325 | 14,1 | 13 | 5,4 | 8,7 | 7,6 |
| **4E 20/28-15** | 1117 | 1082 | 732 | 385 | 350 | 18 | 16,4 | 7,7 | 10,3 | 8,7 |
| **4E 20/38-20** | 1350 | 1315 | 930 | 420 | 385 | 21,8 | 20,2 | 9,8 | 12 | 10,4 |
| **4E 20/54-30** | 1757 | 1707 | 1287 | 470 | 420 | 27,7 | 25,5 | 13,5 | 14,2 | 12 |

## 4E 30

| TYPE | DIMENSIONS (mm) | | | | | WEIGHT (kg) | | | | |
|---|---|---|---|---|---|---|---|---|---|---|
| | A (1~) | A (3~) | B | C (1~) | C (3~) | A (1~) | A (3~) | B | C (1~) | C (3~) |
| **4E 30/08-05** | 598 | 598 | 273 | 325 | 325 | 10 | 9,5 | 3 | 7 | 6,5 |
| **4E 30/12-07** | 665 | 665 | 340 | 325 | 325 | 11,4 | 10,8 | 3,8 | 7,6 | 7 |
| **4E 30/16-10** | 758 | 733 | 408 | 350 | 325 | 13,2 | 12,1 | 4,5 | 8,7 | 7,6 |
| **4E 30/23-15** | 911 | 876 | 526 | 385 | 350 | 16,2 | 14,6 | 5,9 | 10,3 | 8,7 |
| **4E 30/32-20** | 1134 | 1099 | 714 | 420 | 385 | 20 | 18,4 | 8 | 12 | 10,4 |
| **4E 30/45-30** | 1439 | 1389 | 969 | 470 | 420 | 25,1 | 22,9 | 10,9 | 14,2 | 12 |
| **4E 30/60-40** | - | 1642 | 1224 | - | 418 | - | 28 | 13,8 | - | 14,2 |

## 4E 35

| TYPE | DIMENSIONS (mm) | | | | | WEIGHT (kg) | | | | |
|---|---|---|---|---|---|---|---|---|---|---|
| | A (1~) | A (3~) | B | C (1~) | C (3~) | A (1~) | A (3~) | B | C (1~) | C (3~) |
| **4E 35/07-05** | 602 | 602 | 277 | 325 | 325 | 9,9 | 9,4 | 2,9 | 7 | 6,5 |
| **4E 35/11-07** | 681 | 681 | 356 | 325 | 325 | 11,3 | 10,7 | 3,7 | 7,6 | 7 |
| **4E 35/15-10** | 786 | 761 | 436 | 350 | 325 | 13,2 | 12,1 | 4,5 | 8,7 | 7,6 |
| **4E 35/22-15** | 960 | 925 | 575 | 385 | 350 | 16,2 | 14,6 | 5,9 | 10,3 | 8,7 |
| **4E 35/30-20** | 1190 | 1155 | 770 | 420 | 385 | 20 | 18,4 | 8 | 12 | 10,4 |
| **4E 35/42-30** | 1478 | 1428 | 1008 | 470 | 420 | 24,6 | 22,4 | 10,4 | 14,2 | 12 |
| **4E 35/57-40** | - | 1762 | 1344 | - | 418 | - | 28,1 | 13,9 | - | 14,2 |

## 4E 45

| TYPE | DIMENSIONS (mm) | | | | | WEIGHT (kg) | | | | |
|---|---|---|---|---|---|---|---|---|---|---|
| | A (1~) | A (3~) | B | C (1~) | C (3~) | A (1~) | A (3~) | B | C (1~) | C (3~) |
| **4E 45/06-05** | 582 | 582 | 257 | 325 | 325 | 9,7 | 9,2 | 2,7 | 7 | 6,5 |
| **4E 45/09-07** | 641 | 641 | 316 | 325 | 325 | 10,9 | 10,3 | 3,3 | 7,6 | 7 |
| **4E 45/12-10** | 726 | 701 | 376 | 350 | 325 | 12,6 | 11,5 | 3,9 | 8,7 | 7,6 |
| **4E 45/18-15** | 880 | 845 | 495 | 385 | 350 | 15,4 | 13,8 | 5,1 | 10,3 | 8,7 |
| **4E 45/24-20** | 1035 | 1000 | 615 | 420 | 385 | 18,3 | 16,7 | 6,3 | 12 | 10,4 |
| **4E 45/36-30** | 1360 | 1310 | 890 | 470 | 420 | 23,4 | 21,2 | 9,2 | 14,2 | 12 |
| **4E 45/48-40** | - | 1582 | 1164 | - | 418 | - | 26,2 | 12 | - | 14,2 |
| **4E 45/63-55** | - | 1932 | 1464 | - | 468 | - | 30,4 | 15,1 | - | 15,3 |

## 4E 55

| TYPE | DIMENSIONS (mm) | | | | | WEIGHT (kg) | | | | |
|---|---|---|---|---|---|---|---|---|---|---|
| | A (1~) | A (3~) | B | C (1~) | C (3~) | A (1~) | A (3~) | B | C (1~) | C (3~) |
| **4E 55/05-05** | 562 | 562 | 237 | 325 | 325 | 9,5 | 9 | 2,5 | 7 | 6,5 |
| **4E 55/07-07** | 602 | 602 | 277 | 325 | 325 | 10,5 | 9,9 | 2,9 | 7,6 | 7 |
| **4E 55/10-10** | 686 | 661 | 336 | 350 | 325 | 12,2 | 11,1 | 3,5 | 8,7 | 7,6 |
| **4E 55/15-15** | 821 | 786 | 436 | 385 | 350 | 14,8 | 13,2 | 4,5 | 10,3 | 8,7 |
| **4E 55/20-20** | 955 | 920 | 535 | 420 | 385 | 17,5 | 15,9 | 5,5 | 12 | 10,4 |
| **4E 55/30-30** | 1240 | 1190 | 770 | 470 | 420 | 22,2 | 20 | 8 | 14,2 | 12 |
| **4E 55/40-40** | - | 1388 | 970 | - | 418 | - | 24,2 | 10 | - | 14,2 |
| **4E 55/54-55** | - | 1752 | 1284 | - | 468 | - | 28,5 | 13,2 | - | 15,3 |

## 4E 70

| TYPE | DIMENSIONS (mm) | | | | | WEIGHT (kg) | | | | |
|---|---|---|---|---|---|---|---|---|---|---|
| | A (1~) | A (3~) | B | C (1~) | C (3~) | A (1~) | A (3~) | B | C (1~) | C (3~) |
| **4E 70/04-05** | 550 | 550 | 225 | 325 | 325 | 9,3 | 8,8 | 2,3 | 7 | 6,5 |
| **4E 70/06-07** | 594 | 594 | 269 | 325 | 325 | 10,4 | 9,8 | 2,8 | 7,6 | 7 |
| **4E 70/08-10** | 663 | 638 | 313 | 350 | 325 | 11,9 | 10,8 | 3,2 | 8,7 | 7,6 |
| **4E 70/12-15** | 785 | 750 | 400 | 385 | 350 | 14,4 | 12,8 | 4,1 | 10,3 | 8,7 |
| **4E 70/16-20** | 908 | 873 | 488 | 420 | 385 | 16,9 | 15,3 | 4,9 | 12 | 10,4 |
| **4E 70/24-30** | 1133 | 1083 | 663 | 470 | 420 | 20,9 | 18,7 | 6,7 | 14,2 | 12 |
| **4E 70/32-40** | - | 1292 | 874 | - | 418 | - | 23 | 8,8 | - | 14,2 |
| **4E 70/42-55** | - | 1562 | 1094 | - | 468 | - | 26,3 | 11 | - | 15,3 |
| **4E 70/57-75** | - | 1996 | 1458 | - | 538 | - | 33,7 | 15,1 | - | 18,6 |
| **4E 70/76-100** | - | 2722 | 1912 | - | 810 | - | 46,7 | 19,7 | - | 27 |
| **4E 70/95-125** | - | - | 2361 | - | - | - | - | 24,4 | - | - |

# 4E

## 4E 100

| TYPE | DIMENSIONS (mm) | | | | | WEIGHT (kg) | | | | |
|---|---|---|---|---|---|---|---|---|---|---|
| | A (1~) | A (3~) | B | C (1~) | C (3~) | A (1~) | A (3~) | B | C (1~) | C (3~) |
| **4E 100/04-07** | 609 | 609 | 284 | 325 | 325 | 10,5 | 9,9 | 2,9 | 7,6 | 7 |
| **4E 100/06-10** | 708 | 683 | 358 | 350 | 325 | 12,3 | 11,2 | 3,6 | 8,7 | 7,6 |
| **4E 100/09-15** | 854 | 819 | 469 | 385 | 350 | 14,9 | 13,3 | 4,6 | 10,3 | 8,7 |
| **4E 100/12-20** | 1000 | 965 | 580 | 420 | 385 | 17,6 | 16 | 5,6 | 12 | 10,4 |
| **4E 100/17-30** | 1234 | 1184 | 764 | 470 | 420 | 21,4 | 19,2 | 7,2 | 14,2 | 12 |
| **4E 100/23-40** | - | 1438 | 1020 | - | 418 | - | 23,6 | 9,4 | - | 14,2 |
| **4E 100/31-55** | - | 1820 | 1352 | - | 468 | - | 27,7 | 12,4 | - | 15,3 |
| **4E 100/39-75** | - | 2185 | 1647 | - | 538 | - | 34 | 15,4 | - | 18,6 |
| **4E 100/54-100** | - | 3012 | 2202 | - | 810 | - | 47,3 | 20,3 | - | 27 |

## 4E 150

| TYPE | DIMENSIONS (mm) | | | | | WEIGHT (kg) | | | | |
|---|---|---|---|---|---|---|---|---|---|---|
| | A (1~) | A (3~) | B | C (1~) | C (3~) | A (1~) | A (3~) | B | C (1~) | C (3~) |
| **4E 150/04-10** | 646 | 621 | 296 | 350 | 325 | 11,7 | 10,6 | 3 | 8,7 | 7,6 |
| **4E 150/06-15** | 761 | 726 | 376 | 385 | 350 | 14 | 12,4 | 3,7 | 10,3 | 8,7 |
| **4E 150/08-20** | 876 | 841 | 456 | 420 | 385 | 16,4 | 14,8 | 4,4 | 12 | 10,4 |
| **4E 150/12-30** | 1086 | 1036 | 616 | 470 | 420 | 20,1 | 17,9 | 5,9 | 14,2 | 12 |
| **4E 150/15-40** | - | 1153 | 735 | - | 418 | - | 21,1 | 6,9 | - | 14,2 |
| **4E 150/21-55** | - | 1477 | 1009 | - | 468 | - | 24,5 | 9,2 | - | 15,3 |
| **4E 150/28-75** | - | 1828 | 1290 | - | 538 | - | 30,6 | 12 | - | 18,6 |
| **4E 150/38-100** | - | 2574 | 1764 | - | 810 | - | 43,1 | 16,1 | - | 27 |

## 4E 225

| TYPE | DIMENSIONS (mm) | | | | | WEIGHT (kg) | | | | |
|---|---|---|---|---|---|---|---|---|---|---|
| | A (1~) | A (3~) | B | C (1~) | C (3~) | A (1~) | A (3~) | B | C (1~) | C (3~) |
| **4E 225/05-15** | 747 | 712 | 362 | 385 | 350 | 13,4 | 11,8 | 3,1 | 10,3 | 8,7 |
| **4E 225/07-20** | 872 | 837 | 452 | 420 | 385 | 16 | 14,4 | 4 | 12 | 10,4 |
| **4E 225/10-30** | 1056 | 1006 | 586 | 470 | 420 | 19,5 | 17,3 | 5,3 | 14,2 | 12 |
| **4E 225/14-40** | - | 1184 | 766 | - | 418 | - | 21,2 | 7 | - | 14,2 |
| **4E 225/18-55** | - | 1413 | 945 | - | 468 | - | 24 | 8,7 | - | 15,3 |
| **4E 225/25-75** | - | 1796 | 1258 | - | 538 | - | 30,3 | 11,7 | - | 18,6 |
| **4E 225/34-100** | - | 2473 | 1663 | - | 810 | - | 42,6 | 15,6 | - | 27 |

## 4E 300

| TYPE | DIMENSIONS (mm) | | | | | WEIGHT (kg) | | | | |
|---|---|---|---|---|---|---|---|---|---|---|
| | A (1~) | A (3~) | B | C (1~) | C (3~) | A (1~) | A (3~) | B | C (1~) | C (3~) |
| **4E 300/04-15** | 789 | 754 | 404 | 385 | 350 | 13,4 | 11,8 | 3,1 | 10,3 | 8,7 |
| **4E 300/06-20** | 957 | 922 | 537 | 420 | 385 | 16,1 | 14,5 | 4,1 | 12 | 10,4 |
| **4E 300/09-30** | 1208 | 1158 | 738 | 470 | 420 | - | 17,7 | 5,7 | 14,2 | 12 |
| **4E 300/12-40** | - | 1357 | 939 | - | 418 | - | 21,5 | 7,3 | - | 14,2 |
| **4E 300/16-55** | - | 1674 | 1206 | - | 468 | - | 24,7 | 9,4 | - | 15,3 |
| **4E 300/22-75** | - | 2146 | 1608 | - | 538 | - | 31,1 | 12,5 | - | 18,6 |
| **4E 300/30-100** | - | 2955 | 2145 | - | 810 | - | 43,7 | 16,7 | - | 27 |
| **4E 300/38-125** | - | - | 2680 | - | - | - | - | 20,9 | - | - |

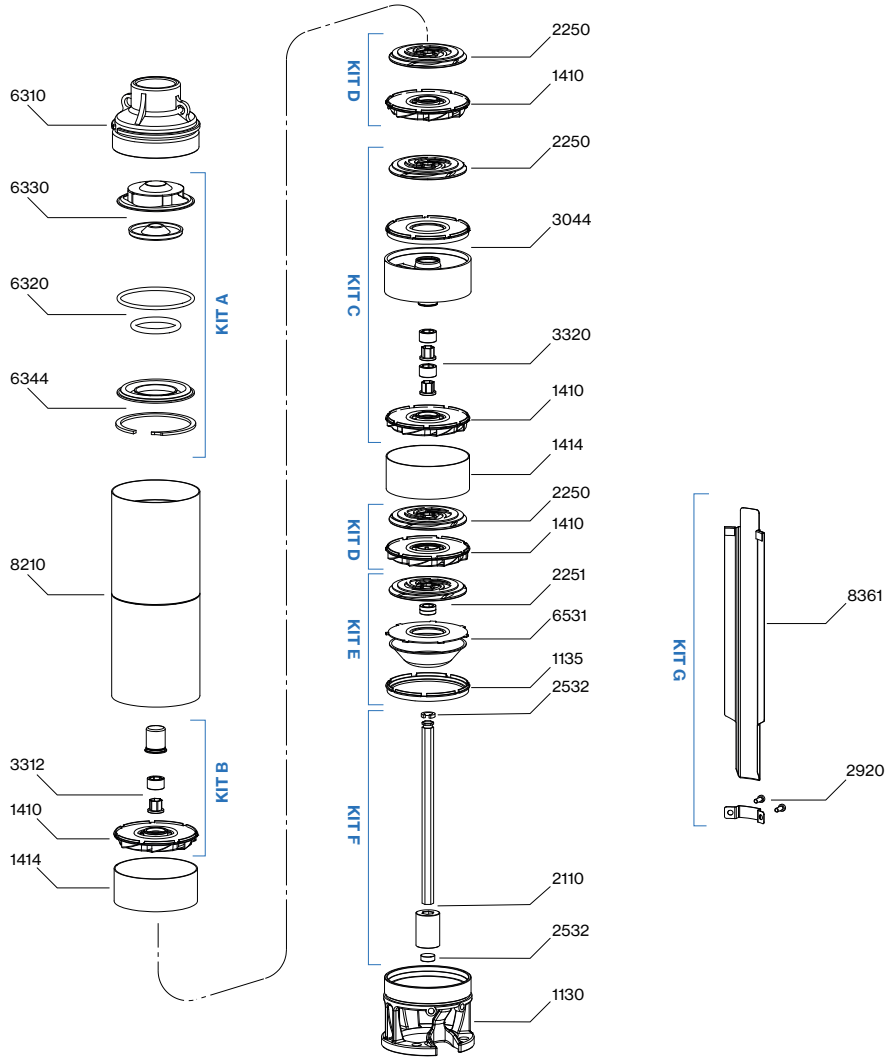


| N. CODE | KIT | DESCRIPTION | MATERIAL |
|---|---|---|---|
| 6320 | **KIT A** *check valve* | **O-RINGS** | NBR |
| 6330 | | **WING VALVE WITH COVER** | AISI 304 |
| 6340 | | **WING VALVE ALIGNER** | POM-C |
| 6344 | | **SUPPORT WING VALVE AND SEEGER** | AISI 304 |
| 1410 | **KIT B** *upper support* | **COMPLETE DIFFUSER WITH DISC** | POM-C + CERAMIC AI203 + AISI 304 |
| 3312 | | **SUPPORT BUSH WITH SLEEVE** | POM-C + CERAMIC AI203 |
| 2531 | | **SEEGER** | POM-C |
| 1410 | **KIT C** *intermediate support* | **COMPLETE DIFFUSER WITH DISC** | POM-C + CERAMIC AI203 + AISI 304 |
| 2250 | | **IMPELLER** | POM-C |
| 3320 | | **SUPPORT BUSH WITH 2X SLEEVE** | POM-C + CERAMIC AI203 |
| 3044 | | **INTERMEDIATE SUPPORT** | AISI 304 |
| 1410 | **KIT D** *stage* | **COMPLETE DIFFUSER WITH DISC** | POM-C + CERAMIC AI203 + AISI 304 |
| 2250 | | **IMPELLER** | POM-C |
| 1135 | **KIT E** *first stage* | **CENTERING RING** | POM-C |
| 6531 | | **DISC AND GRID** | AISI 304 |
| 2251 | | **FIRST IMPELLER WITH SPACERS** | POM-C |
| 2110 | **KIT F** *shaft with coupling* | **SHAFT WITH COUPLING** | AISI 431B |
| 2532 | | **SEEGER WITH SHOCK SUPPORT** | POM-C |
| 2920 | **KIT G** *cable cover* | **SCREWS** | AISI 304 |
| 8361 | | **CABLE COVER** | AISI 304 |
| 1130 | - | **BOTTOM CASING** | AISI 304 |
| 1414 | | **SPACER PIPE** | AISI 304 |
| 6310 | | **TOP CASING** | AISI 304 |
| 8210 | | **EXTERNAL PIPE** | AISI 304 |

# 6E

## Submersible Well Pumps

Designed for 6” wells, the 6E series is solid, durable, and engineered for easy maintenance. The discharge head and suction support are manufactured in AISI 304 stainless steel using precision lost-wax casting for maximum structural integrity.

Technical Highlights: designed for high pressures (up to 40 bar) via series-stage assembly. Includes a 3” threaded discharge outlet with an integrated non-return valve. Standard coupling for 4” (NEMA) motors up to 7.5 HP and 6” motors from 10 HP.

Operation: max diameter: 140 mm (including cable guard). Rotation is counterclockwise from the discharge side. Suitable for continuous duty in vertical or horizontal positions. Minimum water level: 1m above suction.

Applications: deep well extraction (domestic/industrial), lifting systems, surface/sprinkler irrigation, water supply networks, firefighting, and pressure tank supply.

| Construction features | |
|---|---|
| **Suction and delivery outlet** | stainless steel AISI 304 |
| **External jacket** | stainless steel AISI 304 |
| **Impellers** | Noryl® |
| **Diffusers** | Noryl® |
| **Support bush with sleeves** | Noryl® , stainless steel AISI 316L and ceramic |
| **Shaft** | stainless steel AISI 431B |
| **Coupling** | stainless steel AISI 316L |
| **Quantity of sand in the water** | 150 g/m³ |
| **Max liquid temperature** | max 35 °C |
| **Non-return valve** | standard on all models |

## 6E 175

| 50 Hz - 2900 rpm | | | | | | | Q | | | | | | | | |
|---|---|---|---|---|---|---|---|---|---|---|---|---|---|---|---|
| TYPE | SUITABLE MOTOR | | | | AXIAL LOAD | l/min | 0 | 100 | 125 | 150 | 175 | 200 | 225 | 250 | 275 |
| | P2 | | 1~ 230V | 3~ 400V | | l/sec | 0 | 1,67 | 2,08 | 2,50 | 2,92 | 3,33 | 3,75 | 4,17 | 4,58 |
| | HP | kW | A | | N | m³/h | 0 | 6,0 | 7,5 | 9,0 | 10,5 | 12,0 | 13,5 | 15,0 | 16,5 |
| **6E 175/05-30** | 3 | 2,2 | 14,8 | 6,2 | 1410 | H (m) | 78 | 67 | 63 | 58 | 53 | 46 | 37 | 27 | 16 |
| **6E 175/06-40** | 4 | 3 | - | 7,8 | 1690 | | 94 | 80 | 76 | 70 | 63 | 55 | 44 | 32 | 19 |
| **6E 175/07-55** | 5,5 | 4 | - | 9,9 | 1970 | | 109 | 94 | 89 | 82 | 74 | 64 | 52 | 38 | 22 |
| **6E 175/08-55** | 5,5 | 4 | - | 9,9 | 2250 | | 125 | 107 | 101 | 93 | 84 | 73 | 59 | 43 | 25 |
| **6E 175/09-55** | 5,5 | 4 | - | 9,9 | 2530 | | 140 | 121 | 114 | 105 | 95 | 82 | 67 | 48 | 28 |
| **6E 175/12-75** | 7,5 | 5,5 | - | 13,8 | 3370 | | 187 | 161 | 152 | 140 | 127 | 109 | 89 | 65 | 37 |
| **6E 175/16-100** | 10 | 7,5 | - | 16,9 | 4500 | | 250 | 214 | 202 | 187 | 169 | 146 | 118 | 86 | 50 |
| **6E 175/18-125** | 12,5 | 9,3 | - | 21,5 | 5060 | | 281 | 241 | 228 | 210 | 190 | 164 | 133 | 97 | 56 |
| **6E 175/21-125** | 12,5 | 9,3 | - | 21,5 | 5900 | | 328 | 281 | 266 | 245 | 222 | 192 | 155 | 113 | 65 |
| **6E 175/24-150** | 15 | 11 | - | 23,7 | 6740 | | 374 | 322 | 304 | 280 | 253 | 219 | 178 | 129 | 74 |
| **6E 175/28-175** | 17,5 | 13 | - | 27,8 | 7870 | | 437 | 375 | 354 | 327 | 295 | 255 | 207 | 151 | 87 |
| **6E 175/32-200** | 20 | 15 | - | 30,4 | 8990 | | 499 | 429 | 405 | 374 | 338 | 292 | 237 | 172 | 99 |
| **6E 175/40-250** | 25 | 18,5 | - | 38,3 | 11240 | | 624 | 536 | 506 | 467 | 422 | 365 | 296 | 215 | 124 |
| **6E 175/48-300** | 30 | 22 | - | 44 | 13480 | | 749 | 643 | 607 | 561 | 506 | 438 | 355 | 258 | 149 |
| **6E 175/54-400** | 40 | 30 | - | 62 | 15170 | | 842 | 724 | 683 | 631 | 570 | 492 | 400 | 291 | 167 |

*MEI ≥ 0,6 (regulation EU N. 547/2012)*

| | |
|---|---|
| **Max Eff. %** | 68,1 |
| **Max kW / St.** | 0,45 |

| NPSH (m) | Q=25% | Q=50% | Q=75% | Q=100% |
|---|---|---|---|---|
| | 1,1 | 1,5 | 2,0 | 4,5 |

## 6E 225

| 50 Hz - 2900 rpm | | | | | | Q | | | | | | | | | |
|---|---|---|---|---|---|---|---|---|---|---|---|---|---|---|---|
| TYPE | SUITABLE MOTOR | | | AXIAL LOAD | l/min | 0 | 150 | 175 | 200 | 225 | 250 | 275 | 300 | 325 | 350 |
| | P2 | | 3~ 400V | | l/sec | 0 | 2,50 | 2,92 | 3,33 | 3,75 | 4,17 | 4,58 | 5,00 | 5,42 | 5,83 |
| | HP | kW | A | N | m³/h | 0 | 9,0 | 10,5 | 12,0 | 13,5 | 15,0 | 16,5 | 18,0 | 19,5 | 21,0 |
| **6E 225/05-40** | 4 | 3 | 7,8 | 1420 | H (m) | 79 | 71 | 68 | 64 | 58 | 52 | 45 | 37 | 27 | 15 |
| **6E 225/06-55** | 5,5 | 4 | 9,9 | 1700 | | 94 | 86 | 81 | 76 | 70 | 63 | 54 | 44 | 32 | 17 |
| **6E 225/07-75** | 7,5 | 5,5 | 13,8 | 1980 | | 110 | 100 | 95 | 89 | 82 | 73 | 63 | 51 | 37 | 20 |
| **6E 225/08-75** | 7,5 | 5,5 | 13,8 | 2270 | | 126 | 114 | 109 | 102 | 93 | 83 | 72 | 58 | 42 | 23 |
| **6E 225/09-75** | 7,5 | 5,5 | 13,8 | 2550 | | 141 | 128 | 122 | 115 | 105 | 94 | 81 | 66 | 48 | 26 |
| **6E 225/12-100** | 10 | 7,5 | 16,9 | 3400 | | 188 | 171 | 163 | 153 | 140 | 125 | 108 | 88 | 64 | 35 |
| **6E 225/15-125** | 12,5 | 9,2 | 21,5 | 4240 | | 236 | 214 | 204 | 191 | 175 | 156 | 135 | 110 | 80 | 44 |
| **6E 225/18-150** | 15 | 11 | 23,7 | 5090 | | 283 | 257 | 244 | 229 | 210 | 188 | 162 | 131 | 95 | 52 |
| **6E 225/21-175** | 17,5 | 13 | 27,8 | 5940 | | 330 | 299 | 285 | 267 | 245 | 219 | 189 | 153 | 111 | 61 |
| **6E 225/24-200** | 20 | 15 | 30,4 | 6790 | | 377 | 342 | 326 | 306 | 280 | 250 | 216 | 175 | 127 | 70 |
| **6E 225/30-250** | 25 | 18,5 | 38,3 | 8480 | | 471 | 428 | 407 | 382 | 350 | 313 | 269 | 219 | 159 | 87 |
| **6E 225/35-300** | 30 | 22 | 44 | 9900 | | 550 | 499 | 475 | 446 | 408 | 365 | 314 | 256 | 186 | 102 |
| **6E 225/40-400** | 40 | 30 | 62 | 11310 | | 628 | 570 | 543 | 509 | 466 | 417 | 359 | 292 | 212 | 116 |
| **6E 225/45-400** | 40 | 30 | 62 | 12720 | | 707 | 641 | 611 | 573 | 524 | 469 | 404 | 329 | 239 | 131 |
| **6E 225/52-500** | 50 | 37 | 72 | 14700 | | 816 | 741 | 706 | 662 | 606 | 542 | 467 | 380 | 276 | 151 |

*MEI ≥ 0,7 (regulation EU N. 547/2012)*

| | |
|---|---|
| **Max Eff. %** | 69,6 |
| **Max kW / St.** | 0,64 |

| NPSH (m) | Q=25% | Q=50% | Q=75% | Q=100% |
|---|---|---|---|---|
| | 1,1 | 1,5 | 2,0 | 4,5 |

# 6E

## 6E 350

| 50 Hz - 2900 rpm | | | | | | | Q | | | | | | | | | | |
|---|---|---|---|---|---|---|---|---|---|---|---|---|---|---|---|---|---|
| TYPE | SUITABLE MOTOR | | | | AXIAL LOAD | l/min | 0 | 225 | 250 | 275 | 300 | 350 | 400 | 450 | 500 | 550 | 600 |
| | P2 | | 1~ 230V | 3~ 400V | | l/sec | 0 | 3,75 | 4,17 | 4,58 | 5,00 | 5,83 | 6,67 | 7,50 | 8,33 | 9,17 | 10,00 |
| | HP | kW | A | | N | m³/h | 0 | 13,5 | 15,0 | 16,5 | 18,0 | 21,0 | 24,0 | 27,0 | 30,0 | 33,0 | 36,0 |
| **6E 350/02-20** | 2 | 1,5 | 11 | 4,6 | 790 | H (m) | 28 | 23 | 22 | 21 | 20 | 18 | 15 | 13 | 10 | 7 | 4 |
| **6E 350/03-30** | 3 | 2,2 | 14,8 | 6,2 | 1180 | | 42 | 34 | 33 | 32 | 30 | 27 | 23 | 19 | 15 | 10 | 5 |
| **6E 350/04-40** | 4 | 3 | - | 7,8 | 1570 | | 56 | 46 | 44 | 42 | 40 | 36 | 31 | 26 | 20 | 14 | 7 |
| **6E 350/05-55** | 5,5 | 4 | - | 9,9 | 1960 | | 70 | 57 | 55 | 53 | 50 | 45 | 39 | 32 | 25 | 17 | 9 |
| **6E 350/07-75** | 7,5 | 5,5 | - | 13,8 | 2750 | | 98 | 80 | 77 | 74 | 70 | 62 | 54 | 45 | 35 | 24 | 13 |
| **6E 350/10-100** | 10 | 7,5 | - | 16,9 | 3920 | | 140 | 114 | 110 | 105 | 100 | 89 | 77 | 64 | 50 | 34 | 18 |
| **6E 350/12-125** | 12,5 | 9,3 | - | 21,5 | 4700 | | 168 | 137 | 131 | 126 | 120 | 107 | 93 | 77 | 60 | 41 | 22 |
| **6E 350/15-150** | 15 | 11 | - | 23,7 | 5880 | | 210 | 171 | 164 | 158 | 150 | 134 | 116 | 96 | 75 | 51 | 27 |
| **6E 350/17-175** | 17,5 | 13 | - | 27,8 | 6660 | | 238 | 194 | 186 | 179 | 170 | 152 | 131 | 109 | 85 | 58 | 31 |
| **6E 350/20-200** | 20 | 15 | - | 30,4 | 7840 | | 280 | 228 | 219 | 210 | 200 | 178 | 154 | 128 | 100 | 69 | 36 |
| **6E 350/25-250** | 25 | 18,5 | - | 38,3 | 9800 | | 350 | 285 | 274 | 263 | 250 | 223 | 193 | 160 | 125 | 86 | 45 |
| **6E 350/30-300** | 30 | 22 | - | 44 | 11760 | | 420 | 342 | 329 | 315 | 300 | 268 | 232 | 192 | 149 | 103 | 54 |
| **6E 350/35-400** | 40 | 30 | - | 62 | 13720 | | 490 | 399 | 383 | 368 | 350 | 312 | 270 | 224 | 174 | 120 | 63 |
| **6E 350/40-400** | 40 | 30 | - | 62 | 15680 | | 560 | 456 | 438 | 420 | 400 | 357 | 309 | 256 | 199 | 137 | 72 |
| **6E 350/50-500** | 50 | 37 | - | 72 | 19600 | | 700 | 571 | 548 | 525 | 500 | 446 | 386 | 320 | 249 | 172 | 90 |
| **6E 350/58-600*** | 60 | 45 | - | - | 22740 | | 812 | 662 | 635 | 609 | 579 | 517 | 448 | 371 | 289 | 199 | 104 |

**motor available on request*

*MEI ≥ 0,4 (regulation EU N. 547/2012)*

| | |
|---|---|
| **Max Eff. %** | 69,2 |
| **Max kW / St.** | 0,75 |

| **NPSH (m)** | Q=25% | Q=50% | Q=75% | Q=100% |
|---|---|---|---|---|
| | 1,5 | 2,0 | 3,0 | 5,0 |

## 6E 400

| 50 Hz - 2900 rpm | | | | | | Q | | | | | | | | | | |
|---|---|---|---|---|---|---|---|---|---|---|---|---|---|---|---|---|
| TYPE | SUITABLE MOTOR | | | AXIAL LOAD | l/min | 0 | 300 | 325 | 350 | 375 | 400 | 450 | 500 | 550 | 600 | 650 |
| | P2 | | 3~ 400V | | l/sec | 0 | 5,00 | 5,42 | 5,83 | 6,25 | 6,67 | 7,50 | 8,33 | 9,17 | 10,00 | 10,83 |
| | HP | kW | A | N | m³/h | 0 | 18,0 | 19,5 | 21,0 | 22,5 | 24,0 | 27,0 | 30,0 | 33,0 | 36,0 | 39,0 |
| **6E 400/03-40** | 4 | 3 | 7,8 | 1290 | H (m) | 46 | 35 | 34 | 32 | 31 | 29 | 25 | 21 | 16 | 10 | 4 |
| **6E 400/04-55** | 5,5 | 4 | 9,9 | 1720 | | 61 | 47 | 45 | 43 | 41 | 39 | 33 | 27 | 21 | 13 | 5 |
| **6E 400/06-75** | 7,5 | 5,5 | 12,5 | 2570 | | 92 | 70 | 68 | 65 | 61 | 58 | 50 | 41 | 31 | 20 | 8 |
| **6E 400/08-100** | 10 | 7,5 | 16,9 | 3430 | | 122 | 94 | 90 | 86 | 82 | 77 | 67 | 55 | 42 | 27 | 11 |
| **6E 400/10-125** | 12,5 | 9,3 | 21,5 | 4290 | | 153 | 117 | 113 | 108 | 102 | 97 | 84 | 69 | 52 | 34 | 14 |
| **6E 400/12/150** | 15 | 11 | 23,7 | 5150 | | 184 | 141 | 135 | 129 | 123 | 116 | 100 | 82 | 63 | 40 | 16 |
| **6E 400/14-175** | 17,5 | 13 | 27,8 | 6000 | | 214 | 164 | 158 | 151 | 143 | 135 | 117 | 96 | 73 | 47 | 19 |
| **6E 400/16-200** | 20 | 15 | 30,4 | 6860 | | 245 | 187 | 180 | 172 | 164 | 154 | 134 | 110 | 83 | 54 | 22 |
| **6E 400/20-250** | 25 | 18,5 | 38,3 | 8570 | | 306 | 234 | 225 | 215 | 205 | 193 | 167 | 137 | 104 | 67 | 27 |
| **6E 400/24-300** | 30 | 22 | 44 | 10290 | | 367 | 281 | 270 | 258 | 246 | 232 | 200 | 164 | 125 | 81 | 32 |
| **6E 400/28-350** | 35 | 26 | 58 | 12000 | | 428 | 328 | 315 | 301 | 287 | 270 | 234 | 192 | 146 | 94 | 38 |
| **6E 400/32-400** | 40 | 30 | 62 | 13710 | | 490 | 375 | 360 | 344 | 328 | 309 | 267 | 219 | 167 | 108 | 43 |
| **6E 400/40-500** | 50 | 37 | 72 | 17140 | | 612 | 468 | 450 | 430 | 410 | 386 | 334 | 274 | 208 | 134 | 54 |
| **6E 400/46-600*** | 60 | 45 | - | 19710 | | 704 | 539 | 518 | 495 | 471 | 444 | 384 | 315 | 240 | 155 | 62 |

**motor available on request*

*MEI ≥ 0,5 (regulation EU N. 547/2012)*

| | |
|---|---|
| **Max Eff. %** | 69,9 |
| **Max kW / St.** | 0,92 |

| **NPSH (m)** | Q=25% | Q=50% | Q=75% | Q=100% |
|---|---|---|---|---|
| | 1,5 | 2,0 | 3,0 | 5,0 |



*Tolerances according to UNI ISO 9906 grade 3B*

## 6E 550

| 50 Hz - 2900 rpm | | | | | | Q | | | | | | | | | | | |
|---|---|---|---|---|---|---|---|---|---|---|---|---|---|---|---|---|---|
| TYPE | SUITABLE MOTOR | | | AXIAL LOAD | l/min | 0 | 350 | 400 | 450 | 500 | 550 | 600 | 650 | 700 | 750 | 800 | 850 |
| | P2 | | 3~ 400V | | l/sec | 0 | 5,83 | 6,67 | 7,50 | 8,33 | 9,17 | 10,00 | 10,83 | 11,67 | 12,50 | 13,33 | 14,17 |
| | HP | kW | A | N | m³/h | 0 | 21,0 | 24,0 | 27,0 | 30,0 | 33,0 | 36,0 | 39,0 | 42,0 | 45,0 | 48,0 | 51,0 |
| **6E 550/02-40** | 4 | 3 | 7,8 | 870 | H (m) | 31 | 27 | 26 | 25 | 23 | 21 | 19 | 16 | 13 | 10 | 7 | 3 |
| **6E 550/03-55** | 5,5 | 4 | 9,9 | 1310 | | 47 | 40 | 39 | 37 | 35 | 32 | 28 | 24 | 20 | 15 | 10 | 4 |
| **6E 550/04-75** | 7,5 | 5,5 | 13,8 | 1740 | | 62 | 54 | 52 | 49 | 46 | 42 | 38 | 32 | 26 | 20 | 13 | 6 |
| **6E 550/05-100** | 10 | 7,5 | 16,9 | 2170 | | 78 | 67 | 65 | 62 | 58 | 53 | 47 | 40 | 33 | 25 | 17 | 7 |
| **6E 550/06-125** | 12,5 | 9,3 | 21,5 | 2610 | | 93 | 81 | 78 | 74 | 70 | 64 | 57 | 48 | 39 | 30 | 20 | 8 |
| **6E 550/08-150** | 15 | 11 | 23,7 | 3480 | | 124 | 108 | 104 | 99 | 93 | 85 | 76 | 65 | 53 | 40 | 26 | 11 |
| **6E 550/09-175** | 17,5 | 13 | 27,8 | 3910 | | 140 | 121 | 117 | 111 | 104 | 96 | 85 | 73 | 59 | 45 | 30 | 13 |
| **6E 550/10-200** | 20 | 15 | 30,4 | 4340 | | 155 | 135 | 130 | 124 | 116 | 106 | 95 | 81 | 66 | 50 | 33 | 14 |
| **6E 550/13-250** | 25 | 18,5 | 38,3 | 5650 | | 202 | 175 | 169 | 161 | 151 | 138 | 123 | 105 | 86 | 64 | 43 | 18 |
| **6E 550/16-300** | 30 | 22 | 44 | 6950 | | 248 | 216 | 208 | 198 | 186 | 170 | 151 | 129 | 105 | 79 | 53 | 22 |
| **6E 550/19-400** | 40 | 30 | 62 | 8250 | | 295 | 256 | 246 | 235 | 220 | 202 | 180 | 154 | 125 | 94 | 63 | 27 |
| **6E 550/22-400** | 40 | 30 | 62 | 9550 | | 341 | 296 | 285 | 272 | 255 | 234 | 208 | 178 | 145 | 109 | 73 | 31 |
| **6E 550/27-500** | 50 | 37 | 72 | 11720 | | 419 | 364 | 350 | 334 | 313 | 287 | 255 | 218 | 178 | 134 | 89 | 38 |
| **6E 550/32-600*** | 60 | 45 | - | 13890 | | 496 | 431 | 415 | 396 | 371 | 340 | 302 | 259 | 211 | 158 | 106 | 45 |

**motor available on request*

*MEI ≥ 0,4 (regulation EU N. 547/2012)*

| | |
|---|---|
| **Max Eff. %** | 69,8 |
| **Max kW / St.** | 1,36 |

| **NPSH (m)** | Q=25% | Q=50% | Q=75% | Q=100% |
|---|---|---|---|---|
| | 3,0 | 3,0 | 4,0 | 7,0 |

## 6E 600

| 50 Hz - 2900 rpm | | | | | | | Q | | | | | | | | | | | | | |
|---|---|---|---|---|---|---|---|---|---|---|---|---|---|---|---|---|---|---|---|---|
| TYPE | SUITABLE MOTOR | | | | AXIAL LOAD | l/min | 0 | 350 | 400 | 450 | 500 | 550 | 600 | 650 | 700 | 750 | 800 | 850 | 900 | 950 |
| | P2 | | 1~ 230V | 3~ 400V | | l/sec | 0 | 5,83 | 6,67 | 7,50 | 8,33 | 9,17 | 10,00 | 10,83 | 11,67 | 12,50 | 13,33 | 14,17 | 15,00 | 15,83 |
| | HP | kW | A | | N | m³/h | 0 | 21,0 | 24,0 | 27,0 | 30,0 | 33,0 | 36,0 | 39,0 | 42,0 | 45,0 | 48,0 | 51,0 | 54,0 | 57,0 |
| **6E 600/02R-30** | 3 | 2,2 | 14,8 | 6,2 | 740 | H (m) | 22 | 18 | 17 | 16 | 15 | 13 | 12 | 11 | 9 | 8 | 7 | 5 | 3 | |
| **6E 600/02-40** | 4 | 3 | - | 7,8 | 870 | | 25 | 22 | 21 | 20 | 19 | 17 | 16 | 15 | 13 | 12 | 10 | 9 | 7 | 4 |
| **6E 600/03-55** | 5,5 | 4 | - | 9,9 | 1300 | | 38 | 33 | 32 | 30 | 28 | 26 | 24 | 22 | 20 | 18 | 15 | 13 | 10 | 6 |
| **6E 600/04-75** | 7,5 | 5,5 | - | 13,8 | 1730 | | 51 | 44 | 42 | 40 | 37 | 34 | 32 | 29 | 26 | 24 | 21 | 17 | 13 | 8 |
| **6E 600/05-100** | 10 | 7,5 | - | 16,9 | 2160 | | 64 | 55 | 53 | 50 | 47 | 43 | 40 | 36 | 33 | 30 | 26 | 22 | 17 | 11 |

*MEI ≥ 0,4 (regulation EU N. 547/2012)*

| | |
|---|---|
| **Max Eff. %** | 68,4 |
| **Max kW / St.** | 1,22 |

| **NPSH (m)** | Q=25% | Q=50% | Q=75% | Q=100% |
|---|---|---|---|---|
| | 3,0 | 3,0 | 4,0 | 7,0 |

## 6E 700

| 50 Hz - 2900 rpm | | | | | | Q | | | | | | | | | | | | | |
|---|---|---|---|---|---|---|---|---|---|---|---|---|---|---|---|---|---|---|---|
| TYPE | SUITABLE MOTOR | | | AXIAL LOAD | l/min | 0 | 400 | 450 | 500 | 550 | 600 | 650 | 700 | 750 | 800 | 850 | 900 | 1000 | 1100 |
| | P2 | | 3~ 400V | | l/sec | 0 | 6,67 | 7,50 | 8,33 | 9,17 | 10,00 | 10,83 | 11,67 | 12,50 | 13,33 | 14,17 | 15,00 | 16,67 | 18,33 |
| | HP | kW | A | N | m³/h | 0 | 24,0 | 27,0 | 30,0 | 33,0 | 36,0 | 39,0 | 42,0 | 45,0 | 48,0 | 51,0 | 54,0 | 60,0 | 66,0 |
| **6E 700/04-100** | 10 | 7,5 | 16,9 | 1760 | H (m) | 52 | 47 | 45 | 42 | 39 | 36 | 33 | 31 | 28 | 26 | 24 | 21 | 14 | 4 |
| **6E 700/06-125** | 12,5 | 9,3 | 21,5 | 2640 | | 77 | 70 | 68 | 63 | 58 | 54 | 50 | 46 | 43 | 39 | 36 | 32 | 21 | 6 |
| **6E 700/07-150** | 15 | 11 | 23,7 | 3070 | | 90 | 82 | 79 | 74 | 68 | 63 | 58 | 54 | 50 | 46 | 42 | 37 | 25 | 7 |
| **6E 700/08-175** | 17,5 | 13 | 27,8 | 3510 | | 103 | 93 | 90 | 84 | 78 | 72 | 66 | 61 | 57 | 53 | 48 | 43 | 28 | 8 |
| **6E 700/09-200** | 20 | 15 | 30,4 | 3950 | | 116 | 105 | 101 | 95 | 88 | 81 | 75 | 69 | 64 | 59 | 54 | 48 | 32 | 9 |
| **6E 700/12-250** | 25 | 18,5 | 38,3 | 5270 | | 155 | 140 | 135 | 126 | 117 | 107 | 99 | 92 | 85 | 79 | 72 | 64 | 42 | 12 |
| **6E 700/14-300** | 30 | 22 | 44 | 6140 | | 181 | 163 | 158 | 147 | 136 | 125 | 116 | 108 | 100 | 92 | 84 | 74 | 49 | 14 |
| **6E 700/17-400** | 40 | 30 | 62 | 7460 | | 219 | 198 | 191 | 179 | 165 | 152 | 141 | 131 | 121 | 112 | 102 | 90 | 60 | 17 |
| **6E 700/19-400** | 40 | 30 | 62 | 8340 | | 245 | 221 | 214 | 200 | 185 | 170 | 157 | 146 | 135 | 125 | 114 | 101 | 67 | 19 |
| **6E 700/24-500** | 50 | 37 | 72 | 10530 | | 310 | 280 | 270 | 252 | 234 | 215 | 199 | 184 | 171 | 158 | 144 | 128 | 84 | 24 |
| **6E 700/28-600*** | 60 | 45 | - | 12290 | | 361 | 326 | 315 | 294 | 272 | 251 | 232 | 215 | 199 | 184 | 168 | 149 | 98 | 28 |

**motor available on request*

*MEI ≥ 0,4 (regulation EU N. 547/2012)*

| | |
|---|---|
| **Max Eff. %** | 70 |
| **Max kW / St.** | 1,37 |

| **NPSH (m)** | Q=25% | Q=50% | Q=75% | Q=100% |
|---|---|---|---|---|
| | 3,0 | 3,0 | 4,0 | 7,0 |

*Tolerances according to UNI ISO 9906 grade 3B*

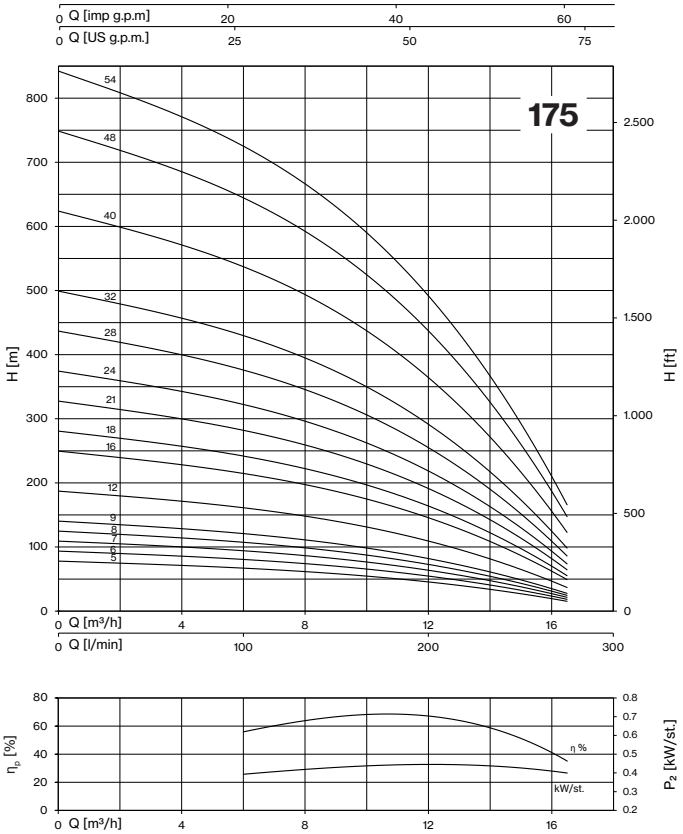
175
Q [imp g.p.m]
Q [US g.p.m.]
H [m]
H [ft]
Q [m³/h]
Q [l/min]
η %
kW/st.
η_p [%]
P₂ [kW/st.]

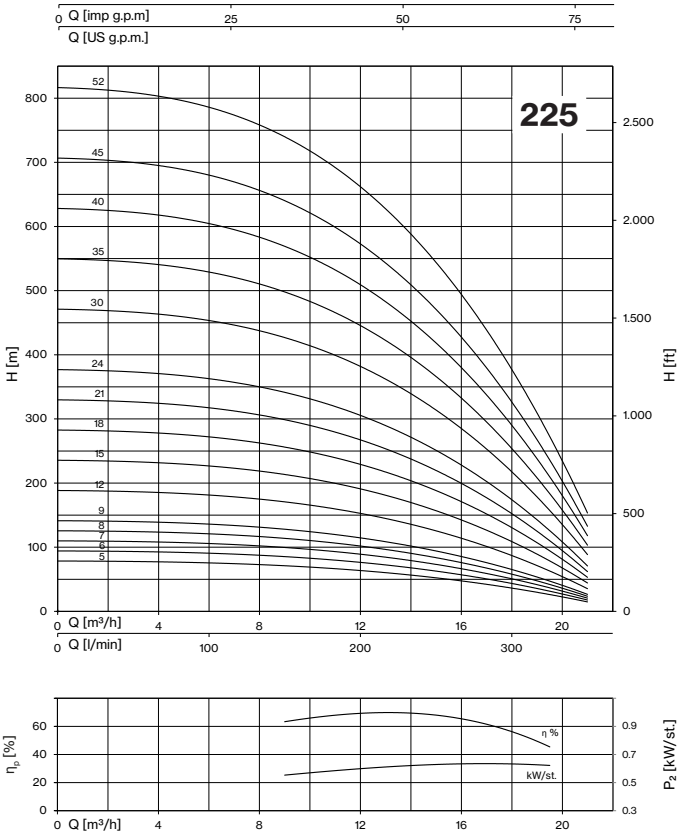
225
Q [imp g.p.m]
Q [US g.p.m.]
H [m]
H [ft]
Q [m³/h]
Q [l/min]
η %
kW/st.
η_p [%]
P₂ [kW/st.]

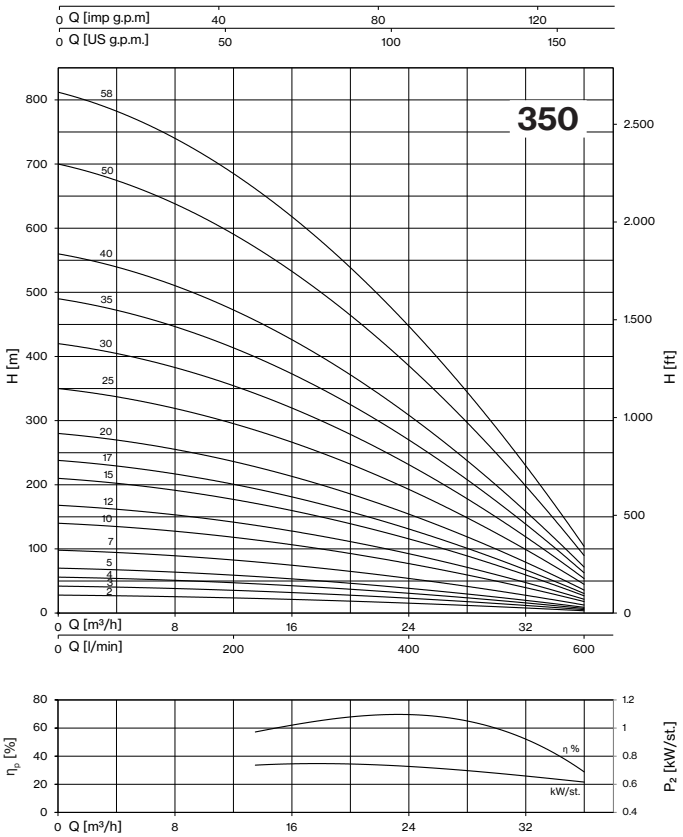
350
Q [imp g.p.m]
Q [US g.p.m.]
H [m]
H [ft]
Q [m³/h]
Q [l/min]
η %
kW/st.
η_p [%]
P₂ [kW/st.]

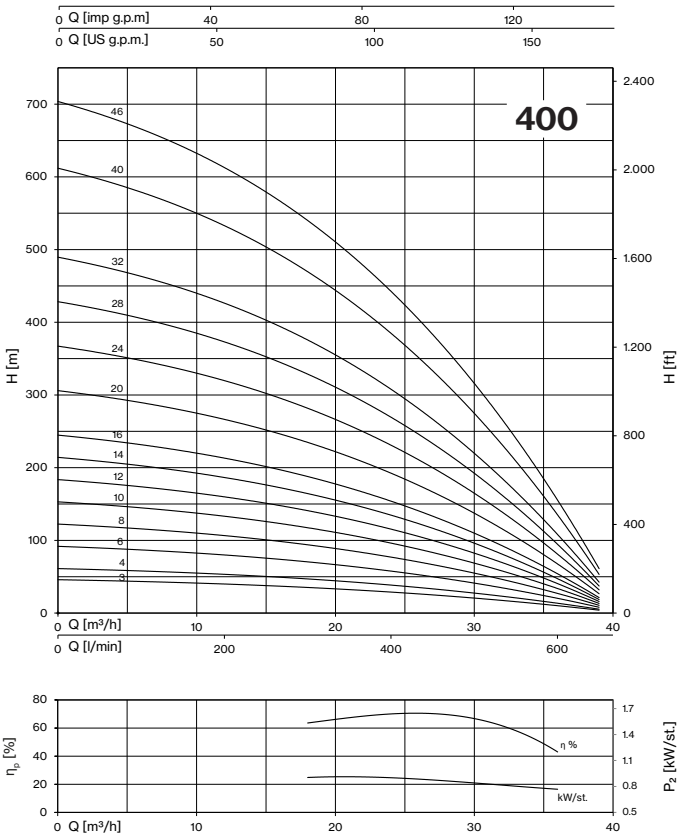
400
Q [imp g.p.m]
Q [US g.p.m.]
H [m]
H [ft]
Q [m³/h]
Q [l/min]
η %
kW/st.
η_p [%]
P₂ [kW/st.]

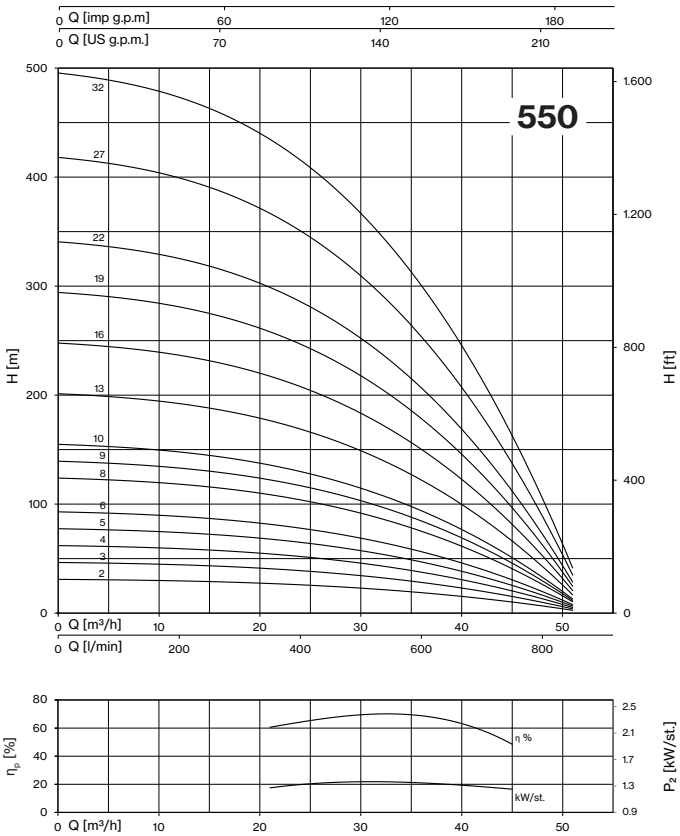
550
Q [imp g.p.m]
Q [US g.p.m.]
H [m]
H [ft]
Q [m³/h]
Q [l/min]
η %
kW/st.
$\eta_p$ [%]
$P_2$ [kW/st.]

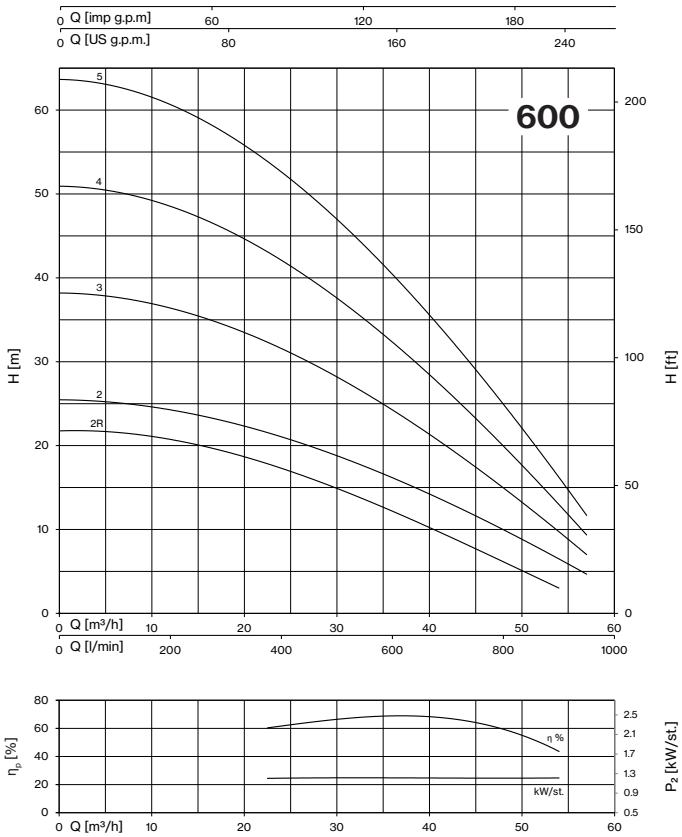
600
Q [imp g.p.m]
Q [US g.p.m.]
H [m]
H [ft]
Q [m³/h]
Q [l/min]
η %
kW/st.
$\eta_p$ [%]
$P_2$ [kW/st.]

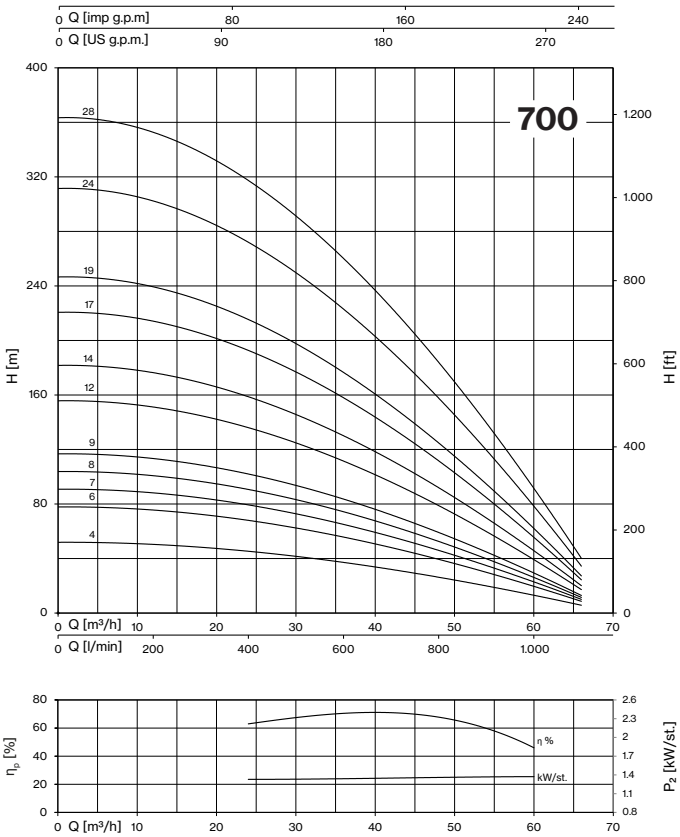
700
Q [imp g.p.m]
Q [US g.p.m.]
H [m]
H [ft]
Q [m³/h]
Q [l/min]
η %
kW/st.
$\eta_p$ [%]
$P_2$ [kW/st.]

# 6E

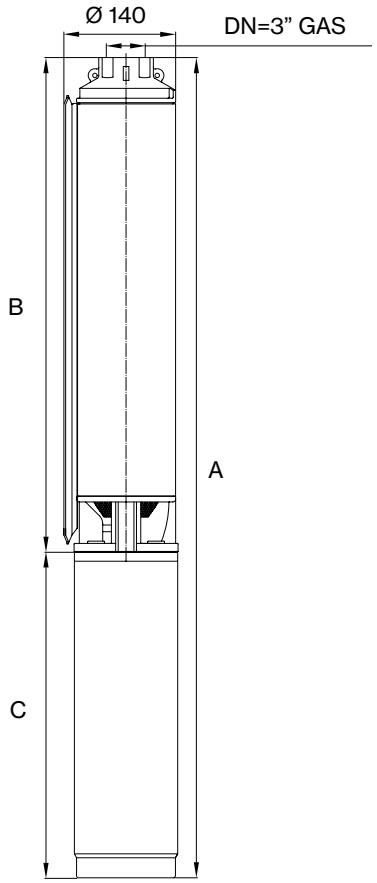


## 6E 175

| TYPE 3~ | MOTOR BRACKET | DIMENSIONS (mm) | | | | | WEIGHT (kg) | | | | |
|---|---|---|---|---|---|---|---|---|---|---|---|
| | | A (1~) | A (3~) | B | C (1~) | C (3~) | A (1~) | A (3~) | B | C (1~) | C (3~) |
| **6E 175/05-30-4** | 4" NEMA | 948 | 898 | 478 | 470 | 420 | 24 | 21,8 | 9,8 | 14,2 | 12 |
| **6E 175/06-40-4** | | - | 934 | 516 | - | 418 | - | 23,2 | 10,4 | - | 12,8 |
| **6E 175/07-55-4** | | - | 1022 | 554 | - | 468 | - | 26,4 | 11,1 | - | 15,3 |
| **6E 175/08-55-4** | | - | 1060 | 592 | - | 468 | - | 27,1 | 11,8 | - | 15,3 |
| **6E 175/09-55-4** | | - | 1098 | 630 | - | 468 | - | 27,7 | 12,4 | - | 15,3 |
| **6E 175/12-75-4** | | - | 1282 | 744 | - | 538 | - | 33,3 | 14,4 | - | 18,9 |
| **6E 175/16-100** | 6" NEMA | - | 1458 | 858 | - | 600 | - | 58,9 | 16,9 | - | 42 |
| **6E 175/18-125** | | - | 1572 | 972 | - | 600 | - | 63,3 | 18,3 | - | 45 |
| **6E 175/21-125** | | - | 1686 | 1086 | - | 600 | - | 67,2 | 22,2 | - | 45 |
| **6E 175/24-150** | | - | 1900 | 1200 | - | 700 | - | 72,2 | 24,2 | - | 48 |
| **6E 175/28-175** | | - | 2104 | 1404 | - | 700 | - | 77,7 | 27,7 | - | 50 |
| **6E 175/32-200*** | | - | 2453 | 1693 | - | 760 | - | 95 | 41 | - | 54 |
| **6E 175/40-250*** | | - | 2827 | 1997 | - | 830 | - | 112,5 | 47,5 | - | 65 |
| **6E 175/48-300*** | | - | 3191 | 2301 | - | 890 | - | 124,1 | 54,1 | - | 70 |
| **6E 175/54-400*** | | - | 3559 | 2529 | - | 1030 | - | 160 | 59 | - | 101 |

** High pressure pump supplied in blocks*

## 6E 225

| TYPE 3~ | MOTOR BRACKET | DIMENSIONS (mm) | | | WEIGHT (kg) | | |
|---|---|---|---|---|---|---|---|
| | | A | B | C | A | B | C |
| **6E 225/05-40-4** | 4" NEMA | 896 | 478 | 418 | 22,6 | 9,8 | 12,8 |
| **6E 225/06-55-4** | | 984 | 516 | 468 | 25,8 | 10,5 | 15,3 |
| **6E 225/07-75-4** | | 1092 | 554 | 538 | 29,7 | 11,1 | 18,6 |
| **6E 225/08-75-4** | | 1130 | 592 | 538 | 30,4 | 11,8 | 18,6 |
| **6E 225/09-75-4** | | 1168 | 630 | 538 | 31 | 12,4 | 18,6 |
| **6E 225/12-100** | 6" NEMA | 1344 | 744 | 600 | 56,3 | 14,3 | 42 |
| **6E 225/15-125** | | 1458 | 858 | 600 | 61,3 | 16,3 | 45 |
| **6E 225/18-150** | | 1672 | 972 | 700 | 66,2 | 18,2 | 48 |
| **6E 225/21-175** | | 1786 | 1086 | 700 | 72,2 | 22,2 | 50 |
| **6E 225/24-200** | | 1960 | 1200 | 760 | 78,1 | 24,1 | 54 |
| **6E 225/30-250** | | 2310 | 1480 | 830 | 93,9 | 28,9 | 65 |
| **6E 225/35-300*** | | 2697 | 1807 | 890 | 113,1 | 43,1 | 70 |
| **6E 225/40-400*** | | 3027 | 1997 | 1030 | 137,2 | 47,2 | 90 |
| **6E 225/45-400*** | | 3217 | 2187 | 1030 | 141,3 | 51,3 | 90 |
| **6E 225/52-500*** | | 3623 | 2453 | 1170 | 158 | 57 | 101 |

** High pressure pump supplied in blocks*

## 6E 350

| TYPE 3~ | MOTOR BRACKET | | DIMENSIONS (mm) | | | | | WEIGHT (kg) | | | |
|---|---|---|---|---|---|---|---|---|---|---|---|
| | | A (1~) | A (3~) | B | C (1~) | C (3~) | A (1~) | A (3~) | B | C (1~) | C (3~) |
| **6E 350/02-20-4** | 4" NEMA | 821 | 786 | 401 | 420 | 385 | 19,4 | 17,8 | 7,4 | 12 | 10,4 |
| **6E 350/03-30-4** | | 928 | 878 | 458 | 470 | 420 | 22,5 | 20,3 | 8,3 | 14,2 | 12 |
| **6E 350/04-40-4** | | - | 933 | 515 | - | 418 | - | 22 | 9,2 | - | 12,8 |
| **6E 350/05-55-4** | | - | 1040 | 572 | - | 468 | - | 25,3 | 10 | - | 15,3 |
| **6E 350/07-75-4** | | - | 1224 | 686 | - | 538 | - | 30,7 | 11,8 | - | 18,9 |
| **6E 350/10-100** | 6" NEMA | - | 1457 | 857 | - | 600 | - | 56,3 | 14,3 | - | 42 |
| **6E 350/12-125** | | - | 1571 | 971 | - | 600 | - | 61,1 | 16,1 | - | 45 |
| **6E 350/15-150** | | - | 1842 | 1142 | - | 700 | - | 66,7 | 18,7 | - | 48 |
| **6E 350/17-175** | | - | 2008 | 1308 | - | 700 | - | 71,2 | 21,2 | - | 50 |
| **6E 350/20-200** | | - | 2254 | 1494 | - | 760 | - | 79,9 | 25,9 | - | 54 |
| **6E 350/25-250** | | - | 2608 | 1778 | - | 830 | - | 95,3 | 30,3 | - | 65 |
| **6E 350/30-300*** | | - | 3077 | 2187 | - | 890 | - | 119,1 | 49,1 | - | 70 |
| **6E 350/35-400*** | | - | 3502 | 2472 | - | 1030 | - | 144,7 | 54,7 | - | 90 |
| **6E 350/40-400*** | | - | 3891 | 2861 | - | 1030 | - | 152,5 | 62,5 | - | 90 |
| **6E 350/50-500*** | | - | 4601 | 3431 | - | 1170 | - | 174,7 | 73,7 | - | 101 |
| **6E 350/58-600*** | - | - | - | 3773 | - | - | - | - | 80,4 | - | - |

** High pressure pump supplied in blocks*

## 6E 400

| TYPE 3~ | MOTOR BRACKET | DIMENSIONS (mm) | | | WEIGHT (kg) | | |
|---|---|---|---|---|---|---|---|
| | | A | B | C | A | B | C |
| **6E 400/03-40-4** | 4" NEMA | 877 | 459 | 418 | 22,6 | 9,8 | 12,8 |
| **6E 400/04-55-4** | | 984 | 516 | 468 | 26,1 | 10,8 | 15,3 |
| **6E 400/06-75-4** | | 1200 | 630 | 570 | 52,9 | 12,9 | 40 |
| **6E 400/08-100** | 6" NEMA | 1344 | 744 | 600 | 56,9 | 14,9 | 42 |
| **6E 400/10-125** | | 1458 | 858 | 600 | 62,1 | 17,1 | 45 |
| **6E 400/12/150** | | 1672 | 972 | 700 | 67,2 | 19,2 | 48 |
| **6E 400/14-175** | | 1786 | 1086 | 700 | 71,4 | 21,4 | 50 |
| **6E 400/16-200** | | 1960 | 1200 | 760 | 77,4 | 23,4 | 54 |
| **6E 400/20-250** | | 2310 | 1480 | 830 | 92,7 | 27,7 | 65 |
| **6E 400/24-300** | | 2597 | 1707 | 890 | 101,5 | 31,5 | 70 |
| **6E 400/28-400*** | | 3103 | 2073 | 1030 | 136,9 | 46,9 | 90 |
| **6E 400/32-400*** | | 3331 | 2301 | 1030 | 141,2 | 51,2 | 90 |
| **6E 400/40-500*** | | 3927 | 2757 | 1170 | 160,8 | 59,8 | 101 |
| **6E 400/46-600*** | - | - | 3099 | - | - | 66,3 | - |

** High pressure pump supplied in blocks*

# 6E

## 6E 550

| TYPE 3~ | MOTOR BRACKET | DIMENSIONS (mm) | | | WEIGHT (kg) | | |
|---|---|---|---|---|---|---|---|
| | | A | B | C | A | B | C |
| **6E 550/02-40-4** | 4" NEMA | 826 | 408 | 418 | 21,3 | 8,5 | 12,8 |
| **6E 550/03-55-4** | | 936 | 468 | 468 | 24,7 | 9,4 | 15,3 |
| **6E 550/04-75-4** | | 1066 | 528 | 538 | 28,9 | 10,3 | 18,6 |
| **6E 550/05-100** | 6" NEMA | 1188 | 588 | 600 | 53,2 | 11,2 | 42 |
| **6E 550/06-125** | | 1248 | 648 | 600 | 57,1 | 12,1 | 45 |
| **6E 550/08-150** | | 1468 | 768 | 700 | 61,9 | 13,9 | 48 |
| **6E 550/09-175** | | 1528 | 828 | 700 | 65 | 15 | 50 |
| **6E 550/10-200** | | 1648 | 888 | 760 | 69,9 | 15,9 | 54 |
| **6E 550/13-250** | | 1898 | 1068 | 830 | 83,6 | 18,6 | 65 |
| **6E 550/16-300** | | 2138 | 1248 | 890 | 91,5 | 21,5 | 70 |
| **6E 550/19-400** | | 2510 | 1480 | 1030 | 117,6 | 27,6 | 90 |
| **6E 550/22-400** | | 2690 | 1660 | 1030 | 120,6 | 30,6 | 90 |
| **6E 550/27-500*** | | 3129 | 1959 | 1170 | 142,2 | 41,2 | 101 |
| **6E 550/32-600*** | - | - | 2397 | - | - | 53,1 | - |

** High pressure pump supplied in blocks*

## 6E 600

| TYPE 3~ | MOTOR BRACKET | DIMENSIONS (mm) | | | | | WEIGHT (kg) | | | | |
|---|---|---|---|---|---|---|---|---|---|---|---|
| | | A (1~) | A (3~) | B | C (1~) | C (3~) | A (1~) | A (3~) | B | C (1~) | C (3~) |
| **6E 600/02R-30-4** | 4" NEMA | 878 | 828 | 408 | 470 | 420 | 26,2 | 20,5 | 8,5 | 14,2 | 12 |
| **6E 600/02-40-4** | | - | 826 | 408 | - | 418 | - | 21,3 | 8,5 | - | 12,8 |
| **6E 600/03-55-4** | | - | 936 | 468 | - | 468 | - | 24,7 | 9,4 | - | 15,3 |
| **6E 600/04-75-4** | | - | 1066 | 528 | - | 538 | - | 28,8 | 10,2 | - | 18,6 |
| **6E 600/05-100** | 6" NEMA | - | 1188 | 588 | - | 600 | - | 53,2 | 11,2 | - | 42 |

## 6E 700

| TYPE 3~ | MOTOR BRACKET | DIMENSIONS (mm) | | | WEIGHT (kg) | | |
|---|---|---|---|---|---|---|---|
| | | A | B | C | A | B | C |
| **6E 700/04-100** | 6" NEMA | 1128 | 528 | 600 | 52,2 | 10,2 | 42 |
| **6E 700/06-125** | | 1248 | 648 | 600 | 57 | 12 | 45 |
| **6E 700/07-150** | | 1408 | 708 | 700 | 60,9 | 12,9 | 48 |
| **6E 700/08-175** | | 1468 | 768 | 700 | 63,8 | 13,8 | 50 |
| **6E 700/09-200** | | 1588 | 828 | 760 | 68,8 | 14,8 | 54 |
| **6E 700/12-250** | | 1838 | 1008 | 830 | 80,7 | 15,7 | 65 |
| **6E 700/14-300** | | 2018 | 1128 | 890 | 87,8 | 17,8 | 70 |
| **6E 700/17-400** | | 2338 | 1308 | 1030 | 111,9 | 21,9 | 90 |
| **6E 700/19-400** | | 2510 | 1480 | 1030 | 116,8 | 26,8 | 90 |
| **6E 700/24-500** | | 2949 | 1779 | 1170 | 138,1 | 37,1 | 101 |
| **6E 700/28-600*** | - | - | 1959 | - | - | 41,7 | - |

** High pressure pump supplied in blocks*

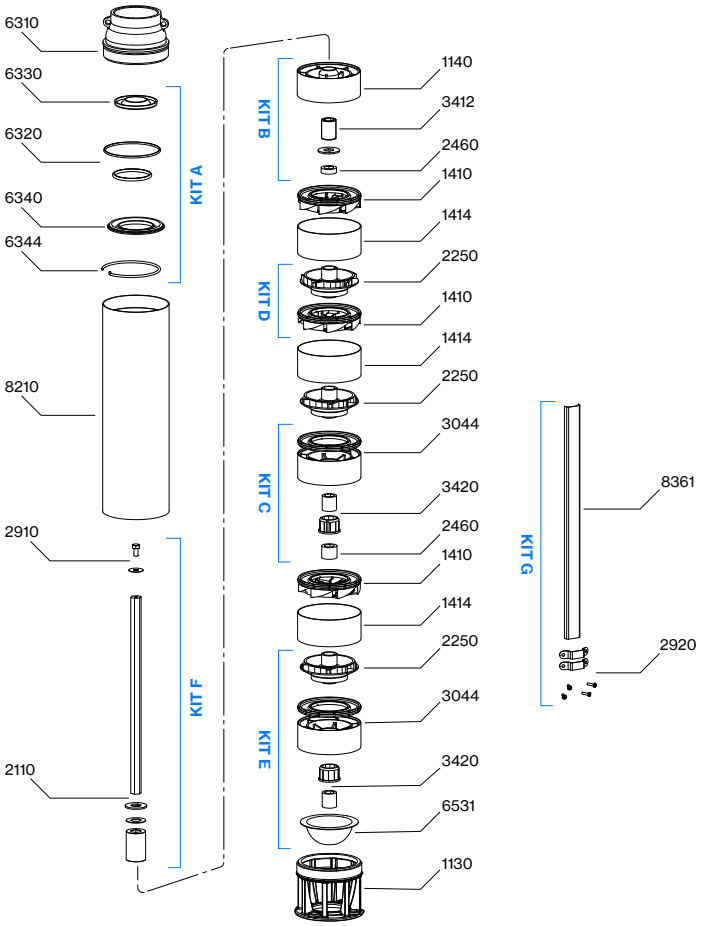


| N. CODE | KIT | DESCRIPTION | MATERIAL |
|---|---|---|---|
| 6320 | **KIT A** *check valve* | **O-RINGS** | NBR |
| 6330 | | **WING VALVE** | AISI 304 |
| 6340 | | **WING VALVE SUPPORT** | AISI 304 |
| 6344 | | **SEEGER** | AISI 304 |
| 1140 | **KIT B** *upper support* | **UPPER SUPPORT** | PPO + PA |
| 2460 | | **SPACER SLEEVE** | PPO |
| 3412 | | **SUPPORT SLEEVE** | AISI 316L + CERAMIC |
| 2460 | **KIT C** *intermediate support* | **WASHER AND SPACERS** | PPO |
| 3044 | | **SUPPORT WITH BUSH AND DISC** | PPO + PA |
| 3420 | | **SUPPORT SLEEVE WITH SPACERS** | AISI 316L |
| 1410 | **KIT D** *stage* | **COMPLETE DIFFUSER** | PPO + AISI 304 |
| 2250 | | **IMPELLER** | PPO |
| 2250 | **KIT E** *first stage* | **FIRST IMPELLER** | PPO |
| 3044 | | **SUPPORT WITH BUSH AND DISC** | PPO + PA |
| 3420 | | **SUPPORT SLEEVE WITH SPACERS** | AISI 316L |
| 6531 | | **GRID** | AISI 304 |
| 2110 | **KIT F** *shaft with coupling* | **SHAFT WITH COUPLING** | AISI 431B + AISI 316 |
| 2910 | | **SCREW WITH WASHER** | AISI 304 |
| 2920 | **KIT G** *cover cable* | **2× SCREW AND CLIP** | AISI 304 |
| 8361 | | **CABLE COVER** | AISI 304 |
| 1130 | - | **BOTTOM CASING** | AISI 304 |
| 1414 | | **SPACER PIPE** | AISI 304 |
| 6310 | | **TOP CASING** | AISI 304 |
| 8210 | | **EXTERNAL PIPE** | AISI 304 |

# 6ES

## Submersible Well Pumps

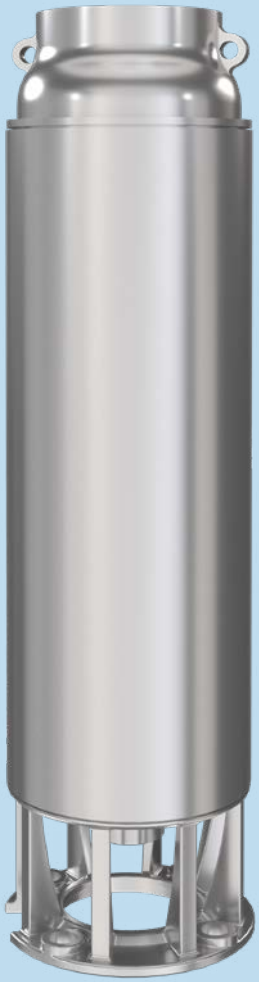

Designed for 6” wells, the 6ES series is entirely constructed from stainless steel. Featuring suction and discharge ports in AISI 304 microfusion and impellers/diffusers in stamped 304L, these units offer superior corrosion resistance and durability.

Technical Highlights: designed for high pressures (up to 40 bar) via series-connected pump groups. Includes a 3” threaded discharge port with an integrated non-return valve. Standard coupling for 4” (NEMA) motors up to 7.5 HP and 6” motors from 10 HP.

Operation: max diameter: 140 mm (including cable guard). Rotation is counterclockwise from the discharge side. Suitable for continuous duty in vertical or horizontal positions. Minimum water level: 1m above suction.

Applications: deep well extraction (domestic/industrial), lifting systems, surface/sprinkler irrigation, water supply networks, firefighting, and pressure tank supply.

| Construction features | |
|---|---|
| **Suction and delivery outlet** | stainless steel AISI 304 |
| **External jacket** | stainless steel AISI 304 |
| **Impellers** | stainless steel AISI 304 |
| **Diffusers** | stainless steel AISI 304 |
| **Support bush with sleeves** | EPDM + ceramic-coated stainless steel AISI 316L |
| **Shaft** | stainless steel AISI 431B |
| **Coupling** | stainless steel AISI 316L |
| **Quantity of sand in the water** | 250 g/m³ |
| **Max liquid temperature** | max 60 °C |
| **Non-return valve** | standard on all models |

| 50 Hz - 2850 rpm | | | | | | | Q | | | | | | | | | |
|---|---|---|---|---|---|---|---|---|---|---|---|---|---|---|---|---|
| TYPE | SUITABLE MOTOR | | | | AXIAL LOAD | l/min | 0 | 100 | 125 | 150 | 175 | 200 | 225 | 250 | 275 | 300 |
| | P2 | | 1~ 230V | 3~ 400V | | l/sec | 0 | 1,67 | 2,08 | 2,5 | 2,92 | 3,33 | 3,75 | 4,17 | 4,58 | 5,0 |
| | HP | kW | A | | N | m³/h | 0 | 6,0 | 7,5 | 9,0 | 10,5 | 12,0 | 13,5 | 15,0 | 16,5 | 18,0 |
| **6ES 200/02-015** | 1,5 | 1,1 | 8,2 | 3,4 | 358 | | 22 | 20 | 20 | 19 | 18 | 17 | 15 | 13 | 10 | 7 |
| **6ES 200/03-020** | 2 | 1,5 | 11 | 4,6 | 538 | | 34 | 30 | 30 | 28 | 27 | 25 | 23 | 20 | 16 | 11 |
| **6ES 200/05-030** | 3 | 2,2 | 14,8 | 6,2 | 896 | | 56 | 51 | 49 | 47 | 45 | 41 | 38 | 33 | 26 | 19 |
| **6ES 200/06-040** | 4 | 3 | - | 7,8 | 1075 | | 67 | 61 | 59 | 57 | 54 | 50 | 45 | 39 | 31 | 22 |
| **6ES 200/08-055** | 5,5 | 4 | - | 9,9 | 1434 | | 90 | 81 | 79 | 76 | 72 | 66 | 60 | 52 | 42 | 30 |
| **6ES 200/10-075** | 7,5 | 5,5 | - | 13,8 | 1792 | | 112 | 101 | 99 | 95 | 90 | 83 | 75 | 65 | 52 | 37 |
| **6ES 200/13-075** | 7,5 | 5,5 | - | 13,8 | 2330 | | 146 | 132 | 128 | 123 | 116 | 108 | 98 | 85 | 68 | 48 |
| **6ES 200/15-100** | 10 | 7,5 | - | 16,9 | 2688 | | 168 | 152 | 148 | 142 | 134 | 124 | 113 | 98 | 78 | 56 |
| **6ES 200/17-100** | 10 | 7,5 | - | 16,9 | 3046 | | 190 | 172 | 167 | 161 | 152 | 141 | 128 | 111 | 88 | 63 |
| **6ES 200/19-125** | 12,5 | 9,3 | - | 21,5 | 3405 | | 213 | 193 | 187 | 180 | 170 | 158 | 143 | 124 | 99 | 70 |
| **6ES 200/22-125** | 12,5 | 9,3 | - | 21,5 | 3942 | | 246 | 223 | 217 | 208 | 197 | 182 | 165 | 143 | 114 | 82 |
| **6ES 200/24-150** | 15 | 11 | - | 23,7 | 4301 | | 269 | 243 | 236 | 227 | 215 | 199 | 180 | 156 | 125 | 89 |
| **6ES 200/26-150** | 15 | 11 | - | 23,7 | 4659 | H | 291 | 264 | 256 | 246 | 233 | 216 | 195 | 169 | 135 | 96 |
| **6ES 200/30-175** | 17,5 | 13 | - | 27,8 | 5376 | (m) | 336 | 304 | 296 | 284 | 269 | 249 | 225 | 195 | 156 | 111 |
| **6ES 200/33-200** | 20 | 15 | - | 30,4 | 5914 | | 370 | 335 | 325 | 312 | 295 | 274 | 248 | 215 | 172 | 122 |
| **6ES 200/36-200** | 20 | 15 | - | 30,4 | 6451 | | 403 | 365 | 355 | 340 | 322 | 298 | 270 | 234 | 187 | 134 |
| **6ES 200/39-250** | 25 | 18,5 | - | 38,3 | 6989 | | 437 | 395 | 384 | 369 | 349 | 323 | 293 | 254 | 203 | 145 |
| **6ES 200/42-250** | 25 | 18,5 | - | 38,3 | 7526 | | 470 | 426 | 414 | 397 | 376 | 348 | 315 | 273 | 218 | 156 |
| **6ES 200/47-300** | 30 | 22 | - | 44 | 8422 | | 526 | 477 | 463 | 444 | 421 | 390 | 353 | 306 | 244 | 174 |
| **6ES 200/50-300** | 30 | 22 | - | 44 | 8960 | | 560 | 507 | 493 | 473 | 448 | 415 | 375 | 325 | 260 | 186 |
| **6ES 200/54-350** | 40 | 30 | - | 62 | 9677 | | 605 | 548 | 532 | 510 | 483 | 448 | 405 | 351 | 281 | 200 |
| **6ES 200/58-400** | 40 | 30 | - | 62 | 10394 | | 650 | 588 | 571 | 548 | 519 | 481 | 435 | 377 | 302 | 215 |
| **6ES 200/62-400** | 40 | 30 | - | 62 | 11110 | | 694 | 629 | 611 | 586 | 555 | 514 | 465 | 403 | 322 | 230 |
| **6ES 200/66-500** | 50 | 37 | - | 72 | 11827 | | 739 | 669 | 650 | 624 | 591 | 547 | 495 | 429 | 343 | 245 |
| **6ES 200/69-500** | 50 | 37 | - | 72 | 12365 | | 773 | 700 | 680 | 652 | 618 | 572 | 518 | 449 | 359 | 256 |
| **6ES 200/72-500** | 50 | 37 | - | 72 | 12902 | | 806 | 730 | 709 | 680 | 644 | 597 | 540 | 468 | 374 | 267 |

*MEI ≥ 0,7 (regulation EU N. 547/2012)*

| | |
|---|---|
| **Eff. max %** | 70 |
| **Max kW / St.** | 0,42 |

| **NPSH (m)** | Q=25% | Q=50% | Q=75% | Q=100% |
|---|---|---|---|---|
| | 1,1 | 1,5 | 2 | 4,5 |

# 6ES 200

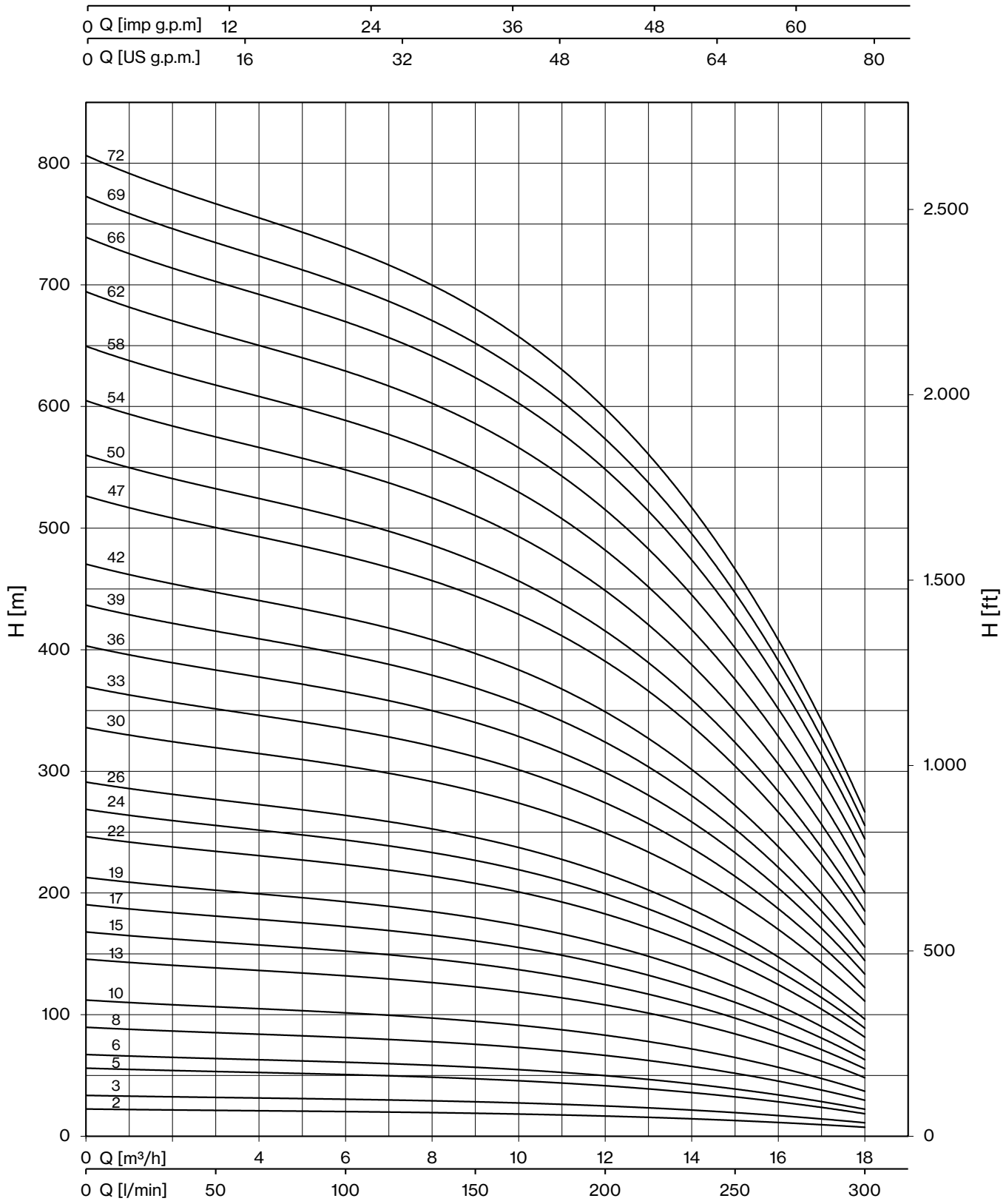
0 Q [imp g.p.m] 12 24 36 48 60
0 Q [US g.p.m.] 16 32 48 64 80
H [m]
800
700
600
500
400
300
200
100
0
H [ft]
2.500
2.000
1.500
1.000
500
0
72
69
66
62
58
54
50
47
42
39
36
33
30
26
24
22
19
17
15
13
10
8
6
5
3
2
0 Q [m³/h] 4 6 8 10 12 14 16 18
0 Q [l/min] 50 100 150 200 250 300

| 50 Hz - 2850 rpm | | | | | | Q | | | | | | | | | | | | |
|---|---|---|---|---|---|---|---|---|---|---|---|---|---|---|---|---|---|---|
| TYPE | SUITABLE MOTOR | | | | AXIAL LOAD | l/min | 0 | 150 | 175 | 200 | 225 | 250 | 275 | 300 | 325 | 350 | 375 | 400 | 450 |
| | P2 | | 1~ 230V | 3~ 400V | | l/sec | 0 | 2,5 | 2,92 | 3,33 | 3,75 | 4,17 | 4,58 | 5,0 | 5,42 | 5,83 | 6,25 | 6,67 | 7,5 |
| | HP | kW | A | | N | m³/h | 0 | 9,0 | 10,5 | 12,0 | 13,5 | 15,0 | 16,5 | 18,0 | 19,5 | 21,0 | 22,5 | 24,0 | 27,0 |
| **6ES 300/02-020** | 2 | 1,5 | 11 | 4,6 | 420 | | 23 | 21 | 21 | 21 | 20 | 19 | 18 | 17 | 16 | 14 | 13 | 11 | 7 |
| **6ES 300/03-030** | 3 | 2,2 | 14,8 | 6,2 | 630 | | 35 | 32 | 32 | 31 | 30 | 29 | 27 | 26 | 24 | 22 | 19 | 16 | 10 |
| **6ES 300/04-040** | 4 | 3 | - | 7,8 | 840 | | 47 | 43 | 42 | 41 | 40 | 38 | 37 | 34 | 32 | 29 | 25 | 22 | 14 |
| **6ES 300/06-055** | 5,5 | 4 | - | 9,9 | 1260 | | 70 | 64 | 63 | 62 | 60 | 58 | 55 | 52 | 47 | 43 | 38 | 33 | 21 |
| **6ES 300/09-075** | 7,5 | 5,5 | - | 13,8 | 1891 | | 105 | 97 | 95 | 93 | 90 | 86 | 82 | 77 | 71 | 65 | 57 | 49 | 31 |
| **6ES 300/12-100** | 10 | 7,5 | - | 16,9 | 2521 | | 140 | 129 | 127 | 124 | 120 | 115 | 110 | 103 | 95 | 86 | 76 | 66 | 41 |
| **6ES 300/15-125** | 12,5 | 9,3 | - | 21,5 | 3151 | | 175 | 161 | 158 | 155 | 150 | 144 | 137 | 129 | 119 | 108 | 95 | 82 | 51 |
| **6ES 300/18-150** | 15 | 11 | - | 23,7 | 3781 | | 210 | 193 | 190 | 185 | 180 | 173 | 165 | 155 | 142 | 130 | 114 | 99 | 62 |
| **6ES 300/21-175** | 17,5 | 13 | - | 27,8 | 4411 | | 245 | 225 | 222 | 216 | 210 | 202 | 192 | 181 | 166 | 151 | 133 | 115 | 72 |
| **6ES 300/24-200** | 20 | 15 | - | 30,4 | 5041 | | 280 | 258 | 253 | 247 | 240 | 230 | 220 | 206 | 190 | 173 | 152 | 132 | 82 |
| **6ES 300/27-250** | 25 | 18,5 | - | 38,3 | 5672 | | 315 | 290 | 285 | 278 | 270 | 259 | 247 | 232 | 213 | 194 | 171 | 148 | 92 |
| **6ES 300/30-250** | 25 | 18,5 | - | 38,3 | 6302 | | 350 | 322 | 317 | 309 | 300 | 288 | 275 | 258 | 237 | 216 | 190 | 165 | 103 |
| **6ES 300/33-300** | 30 | 22 | - | 44 | 6932 | H | 385 | 354 | 348 | 340 | 330 | 317 | 302 | 284 | 261 | 238 | 209 | 181 | 113 |
| **6ES 300/36-300** | 30 | 22 | - | 44 | 7562 | (m) | 420 | 386 | 380 | 371 | 360 | 346 | 329 | 310 | 284 | 259 | 228 | 198 | 123 |
| **6ES 300/38-350** | 40 | 30 | - | 62 | 7982 | | 443 | 408 | 401 | 391 | 380 | 365 | 348 | 327 | 300 | 274 | 241 | 209 | 130 |
| **6ES 300/40-350** | 40 | 30 | - | 62 | 8402 | | 467 | 429 | 422 | 412 | 400 | 384 | 366 | 344 | 316 | 288 | 254 | 220 | 137 |
| **6ES 300/42-350** | 40 | 30 | - | 62 | 8823 | | 490 | 451 | 443 | 433 | 420 | 403 | 384 | 361 | 332 | 302 | 266 | 231 | 144 |
| **6ES 300/44-400** | 40 | 30 | - | 62 | 9243 | | 513 | 472 | 464 | 453 | 440 | 422 | 403 | 378 | 348 | 317 | 279 | 242 | 150 |
| **6ES 300/46-400** | 40 | 30 | - | 62 | 9663 | | 537 | 494 | 485 | 474 | 460 | 442 | 421 | 396 | 363 | 331 | 292 | 253 | 157 |
| **6ES 300/48-400** | 40 | 30 | - | 62 | 10083 | | 560 | 515 | 506 | 494 | 480 | 461 | 439 | 413 | 379 | 346 | 305 | 264 | 164 |
| **6ES 300/52-500** | 50 | 37 | - | 72 | 10923 | | 607 | 558 | 549 | 536 | 520 | 499 | 476 | 447 | 411 | 374 | 330 | 285 | 178 |
| **6ES 300/56-500** | 50 | 37 | - | 72 | 11763 | | 654 | 601 | 591 | 577 | 560 | 538 | 512 | 482 | 442 | 403 | 355 | 307 | 192 |
| **6ES 300/60-500** | 50 | 37 | - | 72 | 12604 | | 700 | 644 | 633 | 618 | 600 | 576 | 549 | 516 | 474 | 432 | 381 | 329 | 205 |
| **6ES 300/66-600*** | 60 | 45 | - | - | 13864 | | 770 | 708 | 696 | 680 | 660 | 634 | 604 | 568 | 521 | 475 | 419 | 362 | 226 |
| **6ES 300/69-600*** | 60 | 45 | - | - | 14494 | | 805 | 740 | 728 | 711 | 690 | 662 | 631 | 593 | 545 | 497 | 438 | 379 | 236 |
| **6ES 300/72-600*** | 60 | 45 | - | - | 15124 | | 840 | 773 | 760 | 742 | 720 | 691 | 659 | 619 | 569 | 518 | 457 | 395 | 246 |

**motor available on request*

*MEI ≥ 0,7 (regulation EU N. 547/2012)*

| | |
|---|---|
| **Eff. max %** | 72 |
| **Max kW / St.** | 0,62 |

| **NPSH (m)** | Q=25% | Q=50% | Q=75% | Q=100% |
|---|---|---|---|---|
| | 1,3 | 1,8 | 2,5 | 4,8 |

# 6ES 300

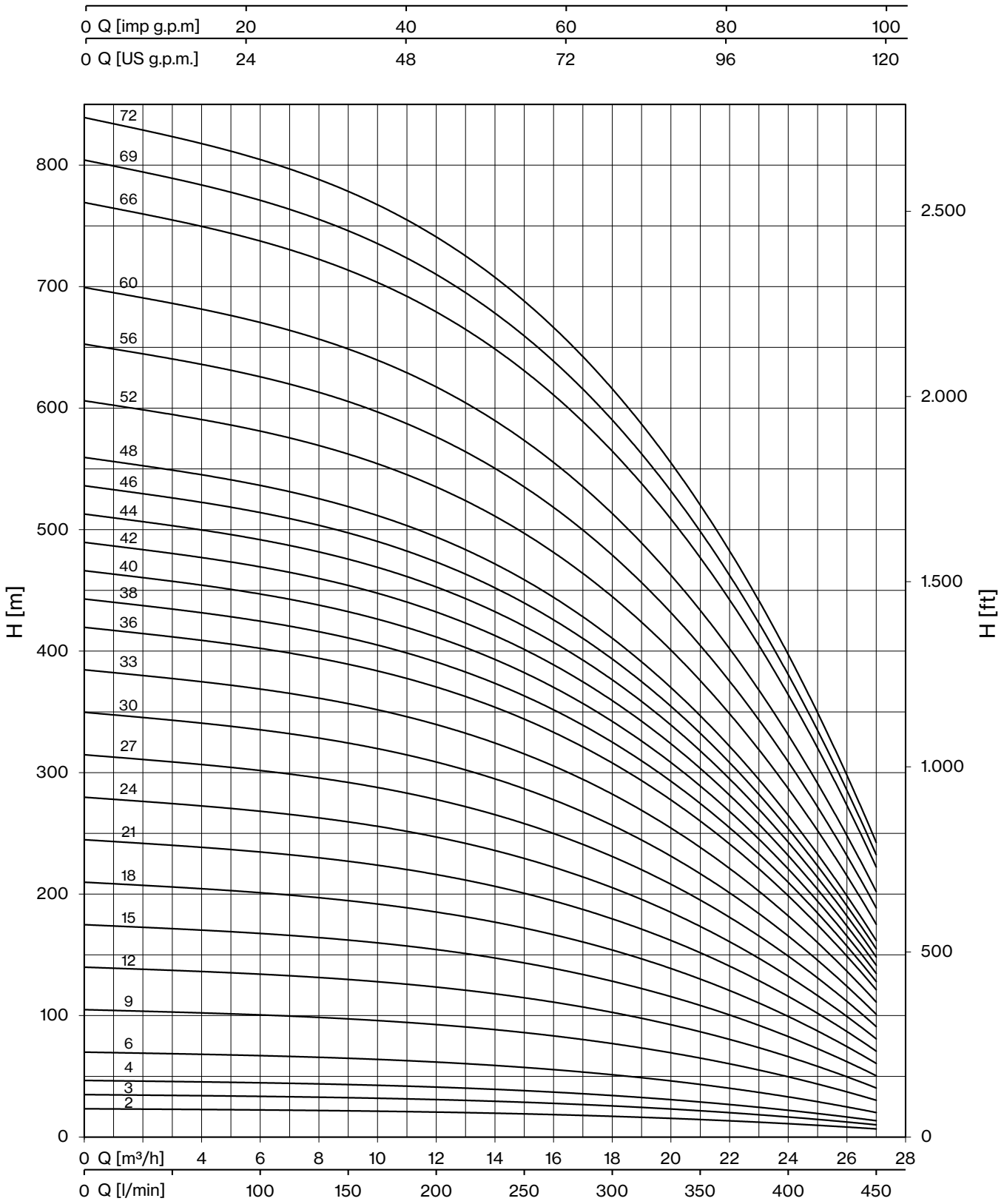
0 Q [imp g.p.m] 20 40 60 80 100
0 Q [US g.p.m.] 24 48 72 96 120
H [m]
800
700
600
500
400
300
200
100
0
H [ft]
2.500
2.000
1.500
1.000
500
0
72
69
66
60
56
52
48
46
44
42
40
38
36
33
30
27
24
21
18
15
12
9
6
4
3
2
0 Q [m³/h] 4 6 8 10 12 14 16 18 20 22 24 26 28
0 Q [l/min] 100 150 200 250 300 350 400 450

| 50 Hz - 2850 rpm | | | | | | Q | | | | | | | | | | | | |
|---|---|---|---|---|---|---|---|---|---|---|---|---|---|---|---|---|---|---|
| TYPE | SUITABLE MOTOR | | | | AXIAL LOAD | l/min | 0 | 250 | 275 | 300 | 325 | 350 | 375 | 400 | 450 | 500 | 550 | 600 | 650 |
| | P2 | | 1~ 230V | 3~ 400V | | l/sec | 0 | 4,17 | 4,58 | 5,0 | 5,42 | 5,83 | 6,25 | 6,67 | 7,5 | 8,33 | 9,17 | 10,0 | 10,8 |
| | HP | kW | A | | N | m³/h | 0 | 15,0 | 16,5 | 18,0 | 19,5 | 21,0 | 22,5 | 24,0 | 27,0 | 30,0 | 33,0 | 36,0 | 39,0 |
| **6ES 500/02-030** | 3 | 2,2 | 14,8 | 6,2 | 678 | H (m) | 24 | 22 | 22 | 21 | 21 | 20 | 20 | 19 | 18 | 16 | 14 | 11 | 7 |
| **6ES 500/03-040** | 4 | 3 | - | 7,8 | 1016 | | 36 | 33 | 33 | 32 | 31 | 30 | 29 | 29 | 26 | 24 | 21 | 17 | 11 |
| **6ES 500/04-055** | 5,5 | 4 | - | 9,9 | 1355 | | 48 | 44 | 44 | 43 | 42 | 40 | 39 | 38 | 35 | 32 | 28 | 22 | 15 |
| **6ES 500/05-075** | 7,5 | 5,5 | - | 13,8 | 1694 | | 61 | 56 | 54 | 53 | 52 | 51 | 49 | 48 | 44 | 40 | 35 | 28 | 19 |
| **6ES 500/07-100** | 10 | 7,5 | - | 16,9 | 2372 | | 85 | 78 | 76 | 75 | 73 | 71 | 69 | 67 | 62 | 56 | 48 | 39 | 26 |
| **6ES 500/09-125** | 12,5 | 9,3 | - | 21,5 | 3049 | | 109 | 100 | 98 | 96 | 94 | 91 | 88 | 86 | 79 | 72 | 62 | 50 | 33 |
| **6ES 500/11-150** | 15 | 11 | - | 23,7 | 3727 | | 133 | 122 | 120 | 117 | 114 | 111 | 108 | 105 | 97 | 88 | 76 | 61 | 41 |
| **6ES 500/13-175** | 17,5 | 13 | - | 27,8 | 4404 | | 157 | 144 | 142 | 139 | 135 | 132 | 128 | 124 | 114 | 104 | 90 | 72 | 48 |
| **6ES 500/15-200** | 20 | 15 | - | 30,4 | 5082 | | 182 | 167 | 163 | 160 | 156 | 152 | 147 | 143 | 132 | 120 | 104 | 83 | 56 |
| **6ES 500/17-250** | 25 | 18,5 | - | 38,3 | 5760 | | 206 | 189 | 185 | 181 | 177 | 172 | 167 | 162 | 150 | 136 | 118 | 94 | 63 |
| **6ES 500/19-250** | 25 | 18,5 | - | 38,3 | 6437 | | 230 | 211 | 207 | 203 | 198 | 192 | 186 | 181 | 167 | 152 | 131 | 105 | 70 |
| **6ES 500/21-300** | 30 | 22 | - | 44 | 7115 | | 254 | 233 | 229 | 224 | 218 | 213 | 206 | 200 | 185 | 168 | 145 | 117 | 78 |
| **6ES 500/23-300** | 30 | 22 | - | 44 | 7792 | | 278 | 255 | 250 | 245 | 239 | 233 | 226 | 219 | 202 | 184 | 159 | 128 | 85 |
| **6ES 500/26-350** | 40 | 30 | - | 62 | 8809 | | 315 | 289 | 283 | 277 | 270 | 263 | 255 | 247 | 229 | 207 | 180 | 144 | 96 |
| **6ES 500/28-400** | 40 | 30 | - | 62 | 9486 | | 339 | 311 | 305 | 299 | 291 | 283 | 275 | 266 | 246 | 223 | 194 | 155 | 104 |
| **6ES 500/30-400** | 40 | 30 | - | 62 | 10164 | | 363 | 333 | 327 | 320 | 312 | 304 | 294 | 285 | 264 | 239 | 208 | 167 | 111 |
| **6ES 500/32-500** | 50 | 37 | - | 72 | 10842 | | 387 | 355 | 348 | 341 | 333 | 324 | 314 | 304 | 282 | 255 | 221 | 178 | 118 |
| **6ES 500/34-500** | 50 | 37 | - | 72 | 11519 | | 411 | 377 | 370 | 363 | 353 | 344 | 334 | 323 | 299 | 271 | 235 | 189 | 126 |
| **6ES 500/36-500** | 50 | 37 | - | 72 | 12197 | | 436 | 400 | 392 | 384 | 374 | 364 | 353 | 342 | 317 | 287 | 249 | 200 | 133 |
| **6ES 500/38-500** | 50 | 37 | - | 72 | 12874 | | 460 | 422 | 414 | 405 | 395 | 385 | 373 | 361 | 334 | 303 | 263 | 211 | 141 |
| **6ES 500/40-600*** | 60 | 45 | - | - | 13552 | | 484 | 444 | 435 | 427 | 416 | 405 | 392 | 380 | 352 | 319 | 277 | 222 | 148 |
| **6ES 500/42-600*** | 60 | 45 | - | - | 14230 | | 508 | 466 | 457 | 448 | 437 | 425 | 412 | 399 | 370 | 335 | 291 | 233 | 155 |
| **6ES 500/44-600*** | 60 | 45 | - | - | 14907 | | 532 | 488 | 479 | 469 | 457 | 445 | 432 | 418 | 387 | 351 | 304 | 244 | 163 |
| **6ES 500/46-600*** | 60 | 45 | - | - | 15585 | | 557 | 511 | 501 | 491 | 478 | 466 | 451 | 437 | 405 | 367 | 318 | 255 | 170 |

**motor available on request*

*MEI ≥ 0,4 (regulation EU N. 547/2012)*

| | |
|---|---|
| **Eff. max %** | 72,2 |
| **Max kW / St.** | 0,95 |

| **NPSH (m)** | Q=25% | Q=50% | Q=75% | Q=100% |
|---|---|---|---|---|
| | 1,5 | 2 | 3 | 5 |

# 6ES 500

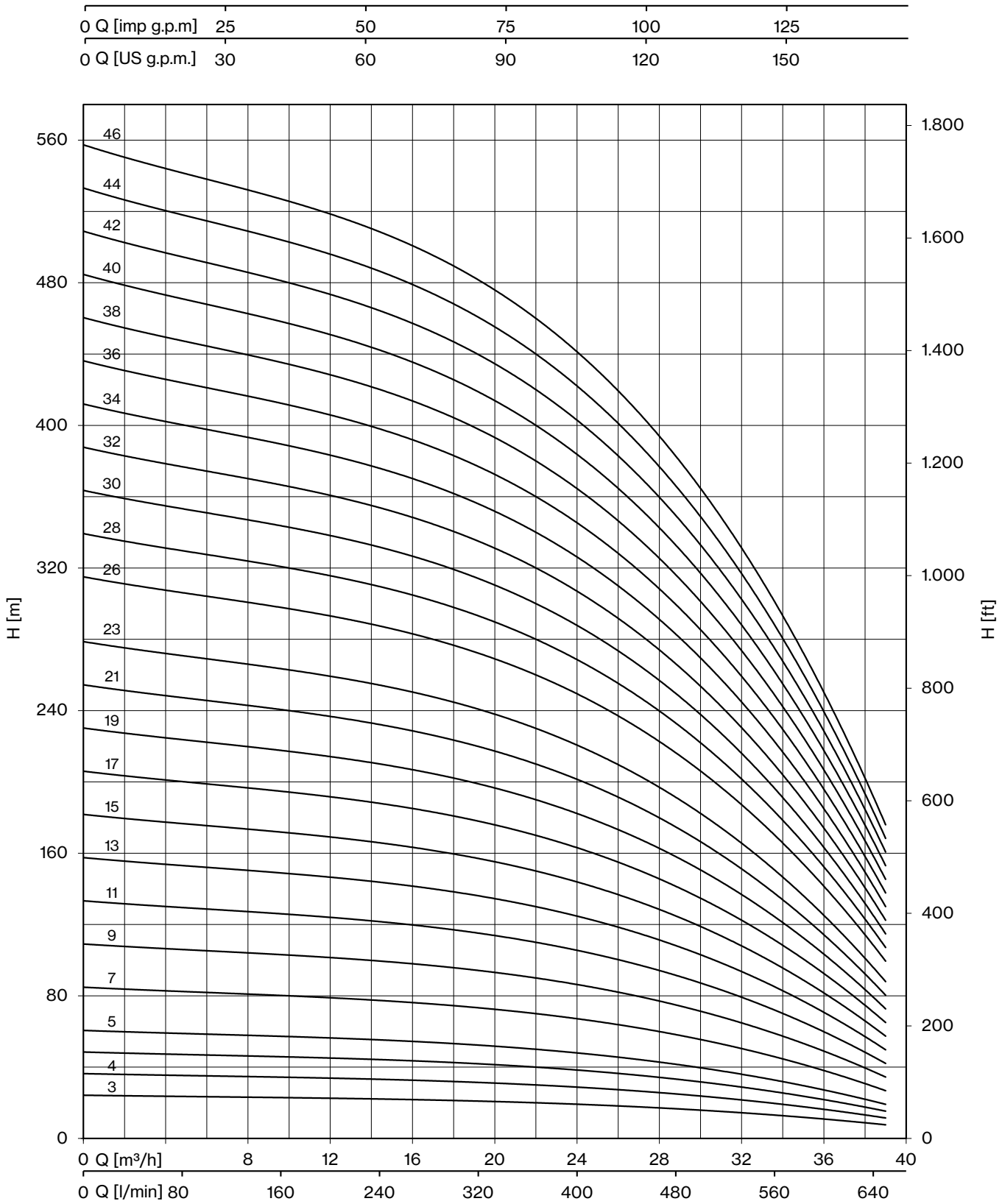
0 Q [imp g.p.m] 25 50 75 100 125
0 Q [US g.p.m.] 30 60 90 120 150
H [m]
560
480
400
320
240
160
80
0
H [ft]
1.800
1.600
1.400
1.200
1.000
800
600
400
200
0
46
44
42
40
38
36
34
32
30
28
26
23
21
19
17
15
13
11
9
7
5
4
3
0 Q [m³/h] 8 12 16 20 24 28 32 36 40
0 Q [l/min] 80 160 240 320 400 480 560 640

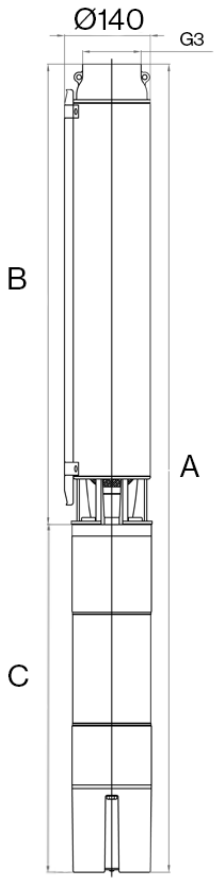


## 6ES 200

| TYPE | MOTOR BRACKET | DIMENSIONS (mm) | | | | | WEIGHT (kg) | | | | |
|---|---|---|---|---|---|---|---|---|---|---|---|
| | | A (1~) | A (3~) | B | C (1~) | C (3~) | A (1~) | A (3~) | B | C (1~) | C (3~) |
| **6ES 200/02-015-4** | 4" NEMA | 699 | 664 | 314 | 385 | 350 | 18,8 | 17,2 | 8,5 | 10,3 | 8,7 |
| **6ES 200/03-020-4** | | 764 | 729 | 344 | 420 | 385 | 21,5 | 19,9 | 9,5 | 12 | 10,4 |
| **6ES 200/05-030-4** | | 874 | 824 | 404 | 470 | 420 | 25,7 | 23,5 | 11,5 | 14,2 | 12 |
| **6ES 200/06-040-4** | | - | 852 | 434 | - | 418 | - | 25,3 | 12,5 | - | 12,8 |
| **6ES 200/08-055-4** | | - | 995 | 527 | - | 468 | - | 30,5 | 15,2 | - | 15,3 |
| **6ES 200/10-075-4** | | - | 1125 | 587 | - | 538 | - | 35,8 | 17,2 | - | 18,6 |
| **6ES 200/13-075-4** | | - | 1215 | 677 | - | 538 | - | 38,9 | 20,3 | - | 18,6 |
| **6ES 200/15-100** | 6" NEMA | - | 1337 | 737 | - | 600 | - | 64,3 | 22,3 | - | 42 |
| **6ES 200/17-100** | | - | 1397 | 797 | - | 600 | - | 66,3 | 24,3 | - | 42 |
| **6ES 200/19-125** | | - | 1457 | 857 | - | 600 | - | 71,4 | 26,4 | - | 45 |
| **6ES 200/22-125** | | - | 1547 | 947 | - | 600 | - | 74,4 | 29,4 | - | 45 |
| **6ES 200/24-150** | | - | 1707 | 1007 | - | 700 | - | 79,4 | 31,4 | - | 48 |
| **6ES 200/26-150** | | - | 1767 | 1067 | - | 700 | - | 82,9 | 34,9 | - | 48 |
| **6ES 200/30-175** | | - | 1902 | 1202 | - | 700 | - | 88,9 | 38,9 | - | 50 |
| **6ES 200/33-200** | | - | 2052 | 1292 | - | 760 | - | 96 | 42 | - | 54 |
| **6ES 200/36-200** | | - | 2194 | 1434 | - | 760 | - | 100,6 | 46,6 | - | 54 |
| **6ES 200/39-250** | | - | 2354 | 1524 | - | 830 | - | 114,7 | 49,7 | - | 65 |
| **6ES 200/42-250** | | - | 2444 | 1614 | - | 830 | - | 117,7 | 52,7 | - | 65 |
| **6ES 200/47-300** | | - | 2654 | 1764 | - | 890 | - | 127,8 | 57,8 | - | 70 |
| **6ES 200/50-300*** | | - | 2838 | 1948 | - | 890 | - | 137,1 | 67,1 | - | 70 |
| **6ES 200/54-350*** | | - | 3098 | 2068 | - | 1030 | - | 161,4 | 71,4 | - | 90 |
| **6ES 200/58-400*** | | - | 3218 | 2188 | - | 1030 | - | 165,7 | 75,7 | - | 90 |
| **6ES 200/62-400*** | | - | 3338 | 2308 | - | 1030 | - | 170 | 80 | - | 90 |
| **6ES 200/66-500*** | | - | 4293 | 3123 | - | 1170 | - | 199,8 | 98,8 | - | 101 |
| **6ES 200/69-500*** | | - | 4406 | 3236 | - | 1170 | - | 203,3 | 102,3 | - | 101 |
| **6ES 200/72-500*** | | - | 4518 | 3348 | - | 1170 | - | 206,9 | 105,9 | - | 101 |

** High pressure pump supplied in blocks*

## 6ES 300

| TYPE | MOTOR BRACKET | DIMENSIONS (mm) | | | | | WEIGHT (kg) | | | | |
|---|---|---|---|---|---|---|---|---|---|---|---|
| | | A (1~) | A (3~) | B | C (1~) | C (3~) | A (1~) | A (3~) | B | C (1~) | C (3~) |
| **6ES 300/02-020-4** | 4" NEMA | 695 | 660 | 275 | 420 | 385 | 20,7 | 19,1 | 8,7 | 12 | 10,4 |
| **6ES 300/03-030-4** | | 783 | 733 | 313 | 470 | 420 | 24 | 21,8 | 9,8 | 14,2 | 12 |
| **6ES 300/04-040-4** | | - | 768 | 350 | - | 418 | - | 23,7 | 10,9 | - | 12,8 |
| **6ES 300/06-055-4** | | - | 926 | 458 | - | 468 | - | 29,1 | 13,8 | - | 15,3 |
| **6ES 300/09-075-4** | | - | 1109 | 571 | - | 538 | - | 35,8 | 17,2 | - | 18,6 |
| **6ES 300/12-100** | 6" NEMA | - | 1283 | 683 | - | 600 | - | 62,5 | 20,5 | - | 42 |
| **6ES 300/15-125** | | - | 1396 | 796 | - | 600 | - | 68,9 | 23,9 | - | 45 |
| **6ES 300/18-150** | | - | 1608 | 908 | - | 700 | - | 75,2 | 27,2 | - | 48 |
| **6ES 300/21-175** | | - | 1721 | 1021 | - | 700 | - | 80,6 | 30,6 | - | 50 |
| **6ES 300/24-200** | | - | 1893 | 1133 | - | 760 | - | 88 | 34 | - | 54 |
| **6ES 300/27-250** | | - | 2091 | 1261 | - | 830 | - | 103,7 | 38,7 | - | 65 |
| **6ES 300/30-250** | | - | 2255 | 1425 | - | 830 | - | 108,7 | 43,7 | - | 65 |
| **6ES 300/33-300** | | - | 2428 | 1538 | - | 890 | - | 117,1 | 47,1 | - | 70 |
| **6ES 300/36-300** | | - | 2540 | 1650 | - | 890 | - | 120,4 | 50,4 | - | 70 |
| **6ES 300/38-350*** | | - | 2903 | 1873 | - | 1030 | - | 148,8 | 58,8 | - | 90 |
| **6ES 300/40-350*** | | - | 2978 | 1948 | - | 1030 | - | 151,2 | 61,2 | - | 90 |
| **6ES 300/42-350*** | | - | 3053 | 2023 | - | 1030 | - | 153,6 | 63,6 | - | 90 |
| **6ES 300/44-400*** | | - | 3128 | 2098 | - | 1030 | - | 155,9 | 65,9 | - | 90 |
| **6ES 300/46-400*** | | - | 3203 | 2173 | - | 1030 | - | 158,3 | 68,3 | - | 90 |
| **6ES 300/48-400*** | | - | 3278 | 2248 | - | 1030 | - | 160,7 | 70,7 | - | 90 |
| **6ES 300/52-500*** | | - | 3568 | 2398 | - | 1170 | - | 176,5 | 75,5 | - | 101 |
| **6ES 300/56-500*** | | - | 3718 | 2548 | - | 1170 | - | 181,2 | 80,2 | - | 101 |
| **6ES 300/60-500*** | | - | 3868 | 2698 | - | 1170 | - | 186 | 85 | - | 101 |
| **6ES 300/66-600*** | | - | - | 3123 | - | - | - | - | 98,8 | - | - |
| **6ES 300/69-600*** | | - | - | 3236 | - | - | - | - | 102,3 | - | - |
| **6ES 300/72-600*** | | - | - | 3348 | - | - | - | - | 105,9 | - | - |

** High pressure pump supplied in blocks*

## 6ES 500

| TYPE | MOTOR BRACKET | DIMENSIONS (mm) | | | | | WEIGHT (kg) | | | | |
|---|---|---|---|---|---|---|---|---|---|---|---|
| | | A (1~) | A (3~) | B | C (1~) | C (3~) | A (1~) | A (3~) | B | C (1~) | C (3~) |
| **6ES 500/02-030-4** | 4" NEMA | 763 | 713 | 293 | 470 | 420 | 23,4 | 21,2 | 9,2 | 14,2 | 12 |
| **6ES 500/03-040-4** | | - | 758 | 340 | - | 418 | - | 23,3 | 10,5 | - | 12,8 |
| **6ES 500/04-055-4** | | - | 887 | 419 | - | 468 | - | 27,8 | 12,5 | - | 15,3 |
| **6ES 500/05-075-4** | | - | 1004 | 466 | - | 538 | - | 32,5 | 13,9 | - | 18,6 |
| **6ES 500/07-100** | 6" NEMA | - | 1159 | 559 | - | 600 | - | 58,6 | 16,6 | - | 42 |
| **6ES 500/09-125** | | - | 1252 | 652 | - | 600 | - | 64,4 | 19,4 | - | 45 |
| **6ES 500/11-150** | | - | 1445 | 745 | - | 700 | - | 70,1 | 22,1 | - | 48 |
| **6ES 500/13-175** | | - | 1538 | 838 | - | 700 | - | 74,8 | 24,8 | - | 50 |
| **6ES 500/15-200** | | - | 1691 | 931 | - | 760 | - | 81,6 | 27,6 | - | 54 |
| **6ES 500/17-250** | | - | 1854 | 1024 | - | 830 | - | 95,3 | 30,3 | - | 65 |
| **6ES 500/19-250** | | - | 1947 | 1117 | - | 830 | - | 98 | 33 | - | 65 |
| **6ES 500/21-300** | | - | 2100 | 1210 | - | 890 | - | 105,7 | 35,7 | - | 70 |
| **6ES 500/23-300** | | - | 2245 | 1355 | - | 890 | - | 111,5 | 41,5 | - | 70 |
| **6ES 500/26-350** | | - | 2539 | 1509 | - | 1030 | - | 135,6 | 45,6 | - | 90 |
| **6ES 500/28-400** | | - | 2632 | 1602 | - | 1030 | - | 138,3 | 48,3 | - | 90 |
| **6ES 500/30-400*** | | - | 2873 | 1843 | - | 1030 | - | 147,1 | 57,1 | - | 90 |
| **6ES 500/32-500*** | | - | 3106 | 1936 | - | 1170 | - | 161 | 60 | - | 101 |
| **6ES 500/34-500*** | | - | 3199 | 2029 | - | 1170 | - | 163,9 | 62,9 | - | 101 |
| **6ES 500/36-500*** | | - | 3292 | 2122 | - | 1170 | - | 166,8 | 65,8 | - | 101 |
| **6ES 500/38-500*** | | - | 3385 | 2215 | - | 1170 | - | 169,7 | 68,7 | - | 101 |
| **6ES 500/40-600*** | | - | - | 2308 | - | - | - | - | 71,6 | - | - |
| **6ES 500/42-600*** | | - | - | 2401 | - | - | - | - | 74,5 | - | - |
| **6ES 500/44-600*** | | - | - | 2494 | - | - | - | - | 77,5 | - | - |
| **6ES 500/46-600*** | | - | - | 2587 | - | - | - | - | 80,4 | - | - |

** High pressure pump supplied in blocks*

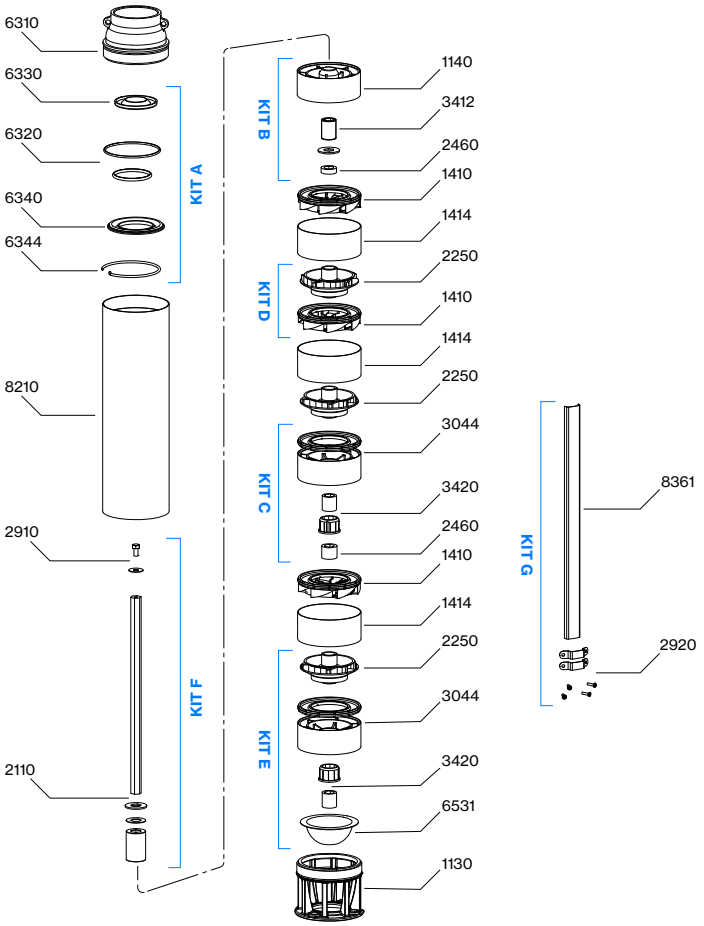


| N. CODE | KIT | DESCRIPTION | MATERIAL |
|---|---|---|---|
| 6320 | **KIT A** *check valve* | **O-RINGS** | STAINLESS STEEL AISI 304 |
| 6330 | | **PLUG/STOPPER** | STAINLESS STEEL AISI 304 |
| 6340 | | **PLUG SUPPORT** | STAINLESS STEEL AISI 304 |
| 6344 | | **SEEGER RING (CIRCLIP)** | STAINLESS STEEL AISI 304 |
| 1140 | **KIT B** *upper support* | **UPPER SUPPORT** | STAINLESS STEEL AISI 304 |
| 2460 | | **SHIM/THICKNESS** | STAINLESS STEEL AISI 316L + CERAMIC |
| 3412 | | **BEARING BUSHING** | STAINLESS STEEL AISI 304 |
| 2460 | **KIT C** *intermediate support* | **SHIMS/SPACERS** | STAINLESS STEEL AISI 304 |
| 3044 | | **SUPPORT WITH BUSHING AND DISC** | STAINLESS STEEL AISI 316L |
| 3420 | | **BEARING BUSHING** | STAINLESS STEEL AISI 304 |
| 1410 | **KIT D** *stage* | **COMPLETE DIFFUSER** | STAINLESS STEEL AISI 304 |
| 2250 | | **IMPELLER** | STAINLESS STEEL AISI 304 |
| 2250 | **KIT E** *first stage* | **FIRST IMPELLER** | STAINLESS STEEL AISI 304 |
| 3044 | | **SUPPORT WITH BUSHING AND DISC** | STAINLESS STEEL AISI 316L |
| 3420 | | **BEARING BUSHING** | STAINLESS STEEL AISI 304 |
| 6531 | | **STRAINER/GRID** | STAINLESS STEEL AISI 431B + STAINLESS STEEL AISI 316 |
| 2110 | **KIT F** *shaft with coupling* | **SHAFT WITH COUPLING** | STAINLESS STEEL AISI 304 |
| 2910 | | **SCREW WITH WASHER** | STAINLESS STEEL AISI 304 |
| 2920 | **KIT G** *cover cable* | **SCREWS AND CLIPS** | STAINLESS STEEL AISI 304 |
| 8361 | | **CABLE COVER** | STAINLESS STEEL AISI 304 |
| 1130 | - | **SUCTION BODY** | STAINLESS STEEL AISI 304 |
| 1414 | | **SPACER PIPE** | STAINLESS STEEL AISI 304 |
| 6310 | | **VALVE BODY** | STAINLESS STEEL AISI 304 |
| 8210 | | **EXTERNAL PIPE** | STAINLESS STEEL AISI 304 |

# 6-8-10LMG line

## Submersible Well Pumps

Submersible multistage centrifugal pumps for 6”, 8”, 10” wells. Check valve built into the delivery outlet. The motor bracket and coupling are made according to NEMA standards. Most common applications are civil and agricultural.

| Construction features | |
|---|---|
| **Suction and delivery outlet** | cast iron GG25 |
| **Valve** | stainless steel AISI 304 |
| **Impellers and diffusers** | cast iron GG25; AISI 304 impeller on request |
| **Upper bushings** | NBR rubber |
| **Shaft pump side** | stainless steel AISI 304 |
| **Quantity of sand in the water** | max 50 g/m³ |

| Motor | |
|---|---|
| **Asynchronous 2 pole** | rewindable water cooled |
| **Insulation class** | Y (max 30 °C) - PPC winding type<br>F (max 50 °C) - PE2+PA or LPE winding type |
| **Protection degree** | IP68 |
| **Liquid temperature** | max 30 °C (max 50 °C on request) |
| **Depth of immersion** | max 350 m |

| 50 Hz - 2900 rpm | | | | | Q | | | | | | |
|---|---|---|---|---|---|---|---|---|---|---|---|
| TYPE | SUITABLE MOTOR 3~ 400V | | | l/min | 0 | 300 | 400 | 500 | 600 | 700 | 800 |
| | P2 | | CURRENT | l/sec | 0 | 5,00 | 6,67 | 8,33 | 10,00 | 11,67 | 13,33 |
| | HP | kW | A | m³/h | 0 | 18 | 24 | 30 | 36 | 42 | 48 |
| **6LMG 38/03** | 5,5 | 4 | 9,9 | H (m) | 43 | 36 | 33 | 30 | 27 | 22 | 15 |
| **6LMG 38/04** | 7,5 | 5,5 | 13,8 | | 57 | 48 | 44 | 40 | 37 | 30 | 20 |
| **6LMG 38/05** | 10 | 7,5 | 17,5 | | 71 | 60 | 55 | 50 | 46 | 37 | 25 |
| **6LMG 38/06** | 10 | 7,5 | 17,5 | | 86 | 72 | 66 | 60 | 55 | 45 | 30 |
| **6LMG 38/07** | 12,5 | 9,2 | 21 | | 100 | 84 | 77 | 70 | 64 | 52 | 35 |
| **6LMG 38/08** | 15 | 11 | 24,5 | | 114 | 96 | 88 | 80 | 73 | 59 | 40 |
| **6LMG 38/09** | 15 | 11 | 24,5 | | 129 | 108 | 99 | 90 | 82 | 67 | 45 |
| **6LMG 38/10** | 17,5 | 13 | 28 | | 143 | 120 | 110 | 100 | 91 | 74 | 50 |
| **6LMG 38/11** | 17,5 | 13 | 28 | | 157 | 132 | 121 | 110 | 101 | 82 | 55 |
| **6LMG 38/12** | 20 | 15 | 32 | | 171 | 144 | 132 | 120 | 110 | 89 | 60 |
| **6LMG 38/13** | 20 | 15 | 32 | | 186 | 156 | 143 | 130 | 119 | 97 | 65 |
| **6LMG 38/14** | 25 | 18,5 | 40 | | 200 | 168 | 154 | 140 | 128 | 104 | 70 |
| **6LMG 38/15** | 25 | 18,5 | 40 | | 214 | 180 | 165 | 150 | 137 | 111 | 75 |

| | |
|---|---|
| **Max Eff. %** | 74 |
| **Max kW / St.** | 1,22 |

| **NPSH (m)** | Q=25% | Q=50% | Q=75% | Q=100% |
|---|---|---|---|---|
| | 3,4 | 3,4 | 3,8 | 8 |

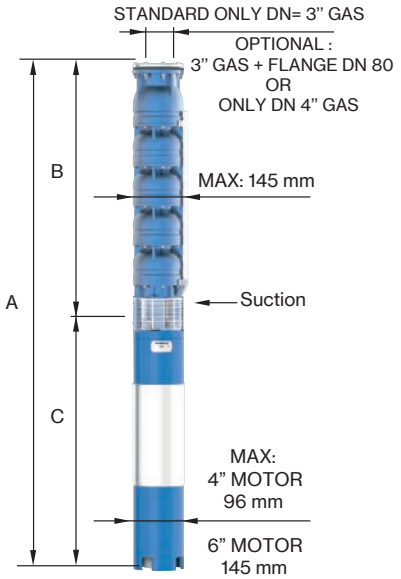


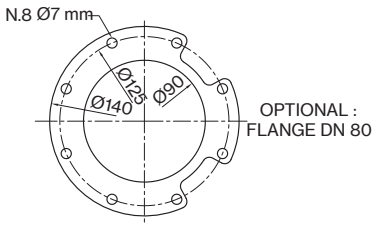


FOR COMMERCIAL TUBE
EXTERNAL DIAMETER: 88,9 mm

| TYPE 3~ | MOTOR BRACKET | DIMENSIONS (mm) | | | WEIGHT (kg) | |
|---|---|---|---|---|---|---|
| | | A | B | C | MOTOR | PUMP |
| **6LMG 38/03-4** | 4" NEMA | 1064 | 596 | 468 | 15,3 | 19 |
| **6LMG 38/04-4** | | 1235 | 697 | 538 | 18,6 | 23 |
| **6LMG 38/05** | 6" NEMA | 1499 | 798 | 701 | 55 | 28 |
| **6LMG 38/06** | | 1600 | 899 | 701 | 55 | 32 |
| **6LMG 38/07** | | 1751 | 1000 | 751 | 60 | 36 |
| **6LMG 38/08** | | 1912 | 1101 | 811 | 65 | 40 |
| **6LMG 38/09** | | 2013 | 1202 | 811 | 65 | 44 |
| **6LMG 38/10** | | 2144 | 1303 | 841 | 70 | 48 |
| **6LMG 38/11** | | 2245 | 1404 | 841 | 70 | 52 |
| **6LMG 38/12** | | 2436 | 1505 | 931 | 75 | 56 |
| **6LMG 38/13** | | 2537 | 1606 | 931 | 75 | 60 |
| **6LMG 38/14** | | 2698 | 1707 | 991 | 83 | 64 |
| **6LMG 38/15** | | 2799 | 1808 | 991 | 83 | 69 |

# 6LMG 38

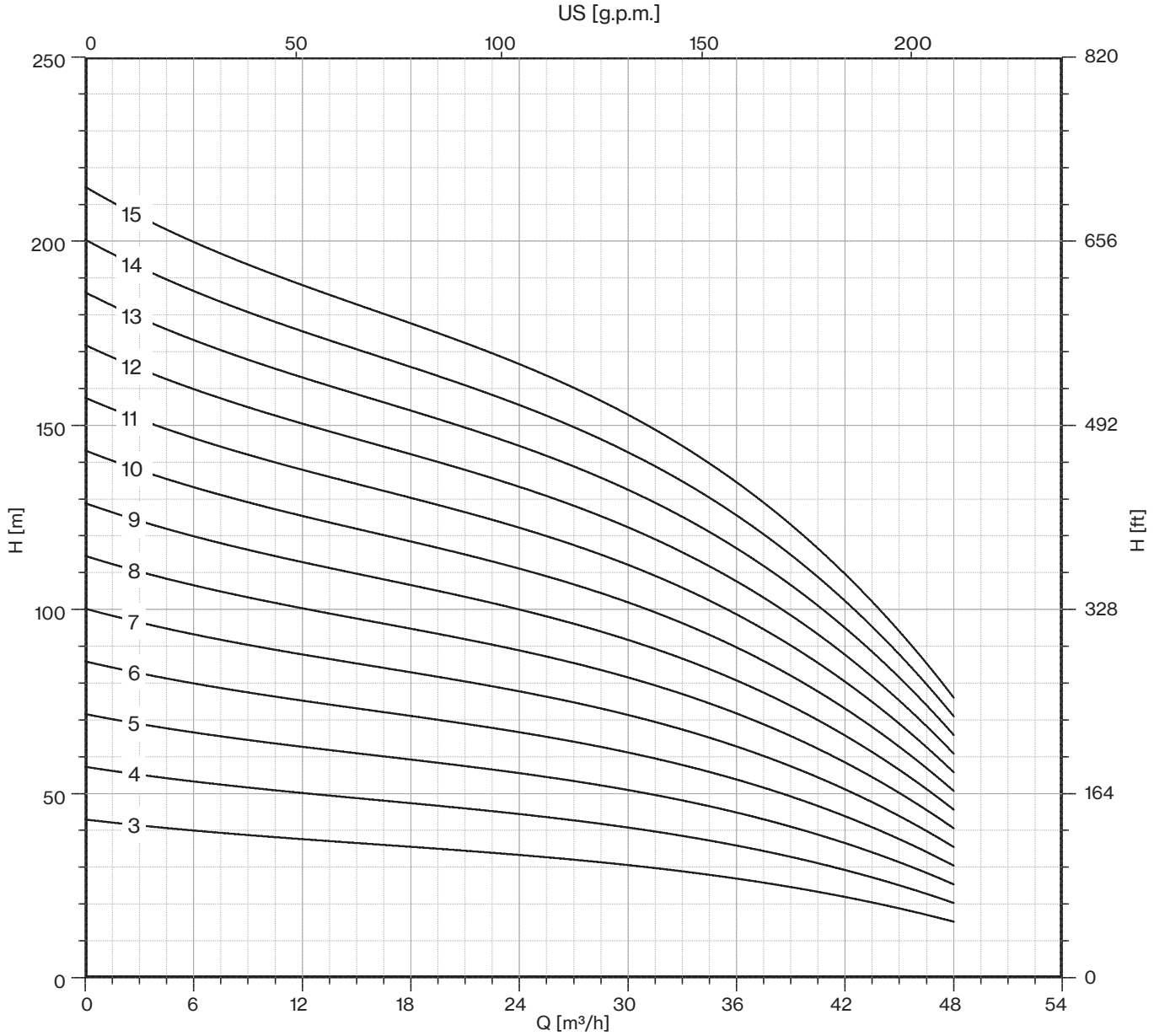


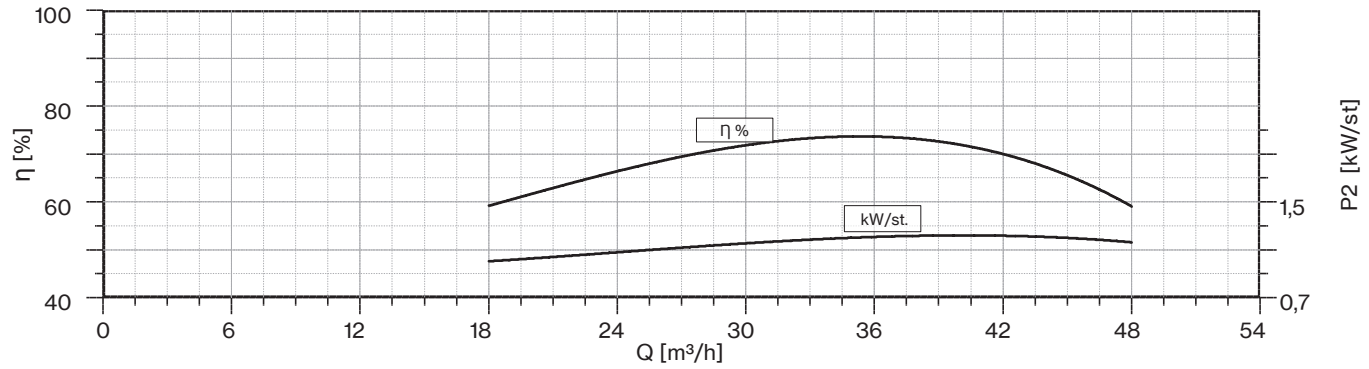




*Sand tolerance 50 g/m³*
*MEI ≥ 0,4 (regulation EU N. 547/2012)*
*Tolerances according to UNI ISO 9906 grade 3B*

| 50 Hz - 2900 rpm | | | | | Q | | | | | | |
|---|---|---|---|---|---|---|---|---|---|---|---|
| TYPE | SUITABLE MOTOR 3~ 400V | | | l/min | 0 | 300 | 400 | 500 | 600 | 700 | 800 |
| | P2 | | CURRENT | l/sec | 0 | 5,00 | 6,67 | 8,33 | 10,00 | 11,67 | 13,33 |
| | HP | kW | A | m³/h | 0 | 18 | 24 | 30 | 36 | 42 | 48 |
| **6LMG 38/16** | 30 | 22 | 47,5 | H (m) | 229 | 192 | 176 | 160 | 146 | 119 | 80 |
| **6LMG 38/17** | 30 | 22 | 47,5 | | 243 | 204 | 187 | 170 | 155 | 126 | 85 |
| **6LMG 38/18** | 30 | 22 | 47,5 | | 257 | 216 | 198 | 180 | 165 | 134 | 90 |
| **6LMG 38/19** | 35 | 26 | 55 | | 271 | 228 | 209 | 190 | 174 | 141 | 95 |
| **6LMG 38/20** | 35 | 26 | 55 | | 286 | 240 | 220 | 200 | 183 | 149 | 100 |
| **6LMG 38/21** | 35 | 26 | 55 | | 300 | 252 | 231 | 210 | 192 | 156 | 105 |
| **6LMG 38/22** | 35 | 26 | 55 | | 314 | 264 | 242 | 220 | 201 | 163 | 110 |
| **6LMG 38/23** | 40 | 30 | 62,5 | | 329 | 276 | 253 | 230 | 210 | 171 | 115 |
| **6LMG 38/24** | 40 | 30 | 62,5 | | 343 | 288 | 264 | 240 | 219 | 178 | 120 |
| **6LMG 38/25** | 40 | 30 | 62,5 | | 357 | 300 | 275 | 250 | 229 | 186 | 125 |
| **6LMG 38/26** | 50 | 37 | 78 | | 371 | 312 | 286 | 260 | 238 | 193 | 130 |
| **6LMG 38/27** | 50 | 37 | 78 | | 386 | 324 | 297 | 270 | 247 | 201 | 135 |
| **6LMG 38/28** | 50 | 37 | 78 | | 400 | 336 | 308 | 280 | 256 | 208 | 140 |
| **6LMG 38/29** | 50 | 37 | 78 | | 414 | 348 | 319 | 290 | 265 | 215 | 145 |
| **6LMG 38/30** | 50 | 37 | 78 | | 429 | 360 | 330 | 300 | 274 | 223 | 150 |

| | |
|---|---|
| **Max Eff. %** | 74 |
| **Max kW / St.** | 1,22 |

| **NPSH (m)** | Q=25% | Q=50% | Q=75% | Q=100% |
|---|---|---|---|---|
| | 3,4 | 3,4 | 3,8 | 8 |

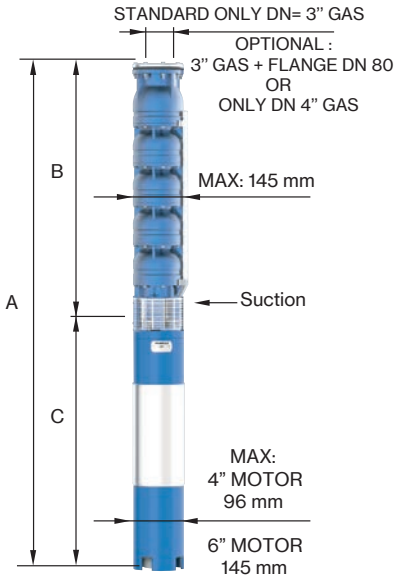


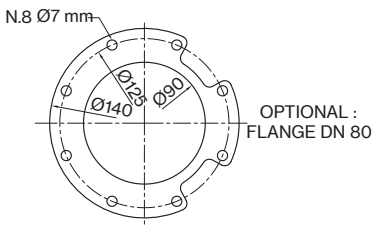


FOR COMMERCIAL TUBE
EXTERNAL DIAMETER: 88,9 mm

| TYPE 3~ | MOTOR BRACKET | DIMENSIONS (mm) | | | WEIGHT (kg) | |
|---|---|---|---|---|---|---|
| | | A | B | C | MOTOR | PUMP |
| **6LMG 38/16** | 6" NEMA | 2980 | 1909 | 1071 | 92 | 73 |
| **6LMG 38/17** | | 3081 | 2010 | 1071 | 92 | 77 |
| **6LMG 38/18** | | 3182 | 2111 | 1071 | 92 | 81 |
| **6LMG 38/19** | | 3393 | 2212 | 1181 | 100 | 85 |
| **6LMG 38/20** | | 3494 | 2313 | 1181 | 100 | 89 |
| **6LMG 38/21** | | 3595 | 2414 | 1181 | 100 | 93 |
| **6LMG 38/22** | | 3696 | 2515 | 1181 | 100 | 97 |
| **6LMG 38/23** | | 3867 | 2616 | 1251 | 108 | 101 |
| **6LMG 38/24** | | 3968 | 2717 | 1251 | 108 | 105 |
| **6LMG 38/25** | | 4069 | 2818 | 1251 | 108 | 110 |
| **6LMG 38/26** | | 4260 | 2919 | 1341 | 118 | 114 |
| **6LMG 38/27** | | 4361 | 3020 | 1341 | 118 | 118 |
| **6LMG 38/28** | | 4462 | 3121 | 1341 | 118 | 122 |
| **6LMG 38/29** | | 4563 | 3222 | 1341 | 118 | 126 |
| **6LMG 38/30** | | 4664 | 3323 | 1341 | 118 | 130 |

# 6LMG 38

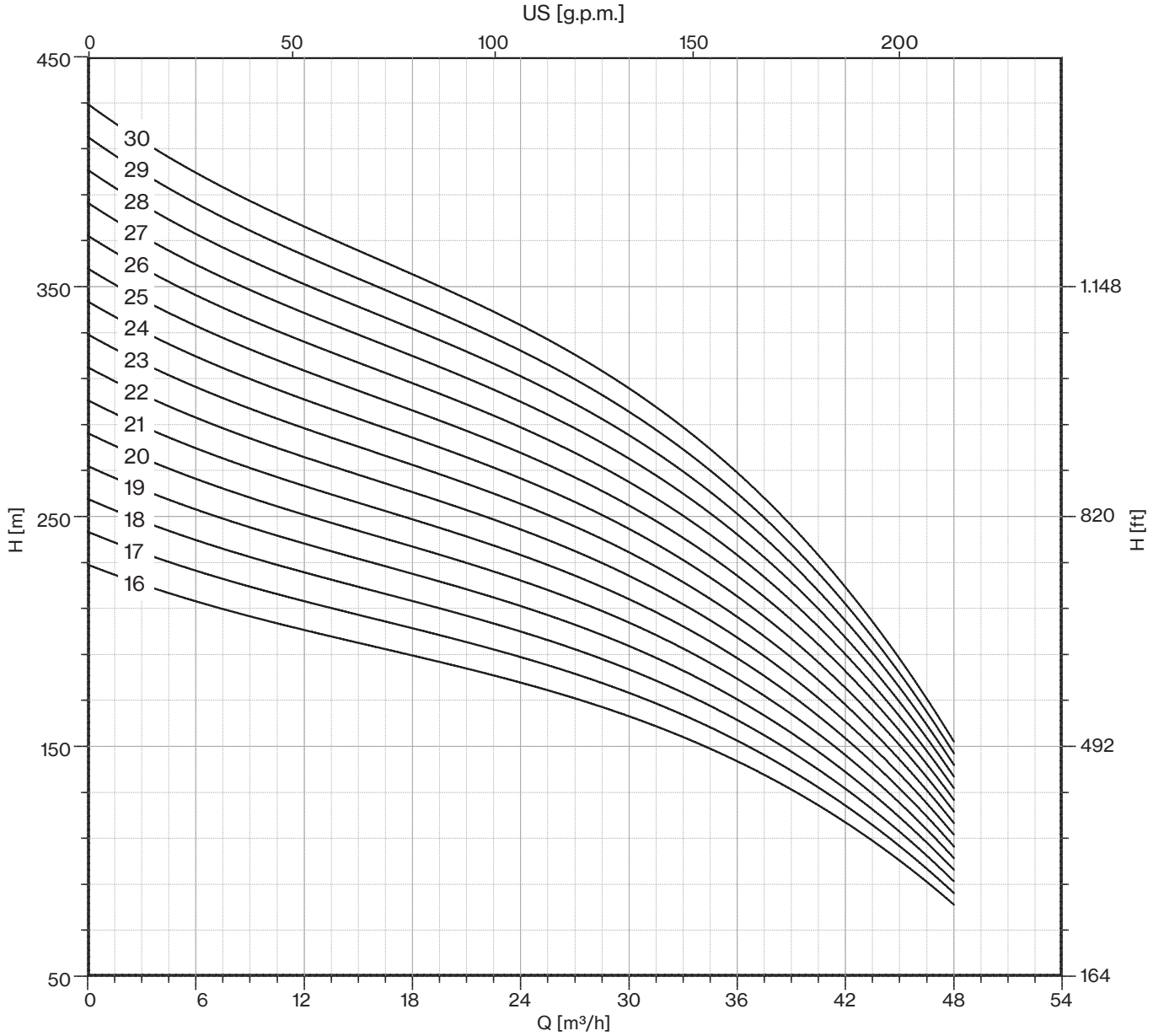


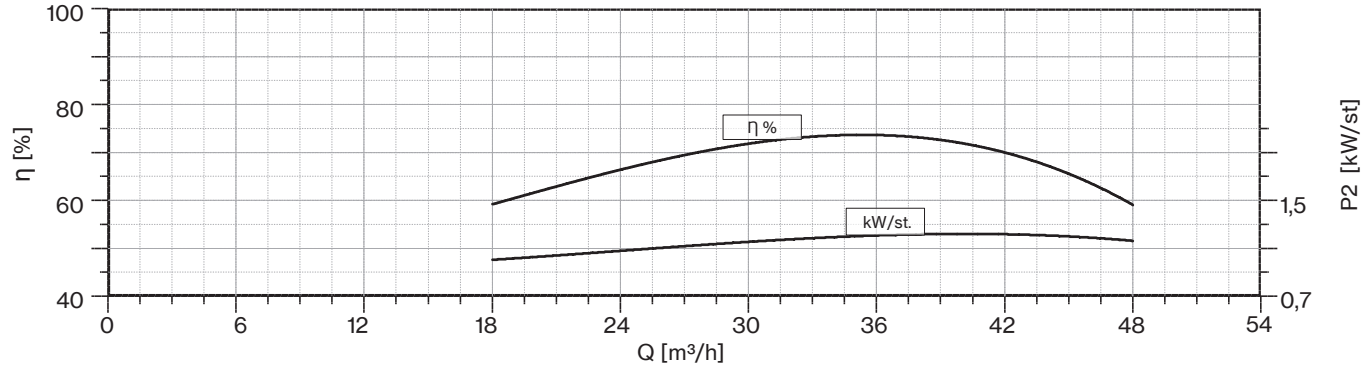




*Sand tolerance 50 g/m³*
*MEI ≥ 0,4 (regulation EU N. 547/2012)*
*Tolerances according to UNI ISO 9906 grade 3B*

| 50 Hz - 2900 rpm | | | | | Q | | | | | | | |
|---|---|---|---|---|---|---|---|---|---|---|---|---|
| TYPE | SUITABLE MOTOR 3~ 400V | | | l/min | 0 | 400 | 500 | 600 | 700 | 800 | 900 | 1000 |
| | P2 | | CURRENT | l/sec | 0 | 6,67 | 8,33 | 10,00 | 11,67 | 13,33 | 15,00 | 16,67 |
| | HP | kW | A | m³/h | 0 | 24 | 30 | 36 | 42 | 48 | 54 | 60 |
| **6LMG 48/03** | 5,5 | 4 | 9,9 | H (m) | 40 | 32 | 31 | 29 | 26 | 22 | 17 | 10 |
| **6LMG 48/04** | 7,5 | 5,5 | 13,8 | | 53 | 43 | 41 | 38 | 34 | 29 | 22 | 13 |
| **6LMG 48/05** | 10 | 7,5 | 17,5 | | 67 | 53 | 51 | 48 | 43 | 36 | 28 | 17 |
| **6LMG 48/06** | 12,5 | 9,2 | 21 | | 80 | 64 | 61 | 57 | 51 | 43 | 33 | 20 |
| **6LMG 48/07** | 12,5 | 9,2 | 21 | | 93 | 75 | 71 | 67 | 60 | 50 | 39 | 23 |
| **6LMG 48/08** | 15 | 11 | 24,5 | | 107 | 85 | 81 | 76 | 68 | 57 | 44 | 27 |
| **6LMG 48/09** | 17,5 | 13 | 28 | | 120 | 96 | 92 | 86 | 77 | 65 | 50 | 30 |
| **6LMG 48/10** | 17,5 | 13 | 28 | | 133 | 107 | 102 | 95 | 85 | 72 | 55 | 33 |
| **6LMG 48/11** | 20 | 15 | 32 | | 147 | 117 | 112 | 105 | 94 | 79 | 61 | 37 |
| **6LMG 48/12** | 20 | 15 | 32 | | 160 | 128 | 122 | 114 | 102 | 86 | 66 | 40 |
| **6LMG 48/13** | 25 | 18,5 | 40 | | 173 | 139 | 132 | 124 | 111 | 93 | 72 | 43 |
| **6LMG 48/14** | 25 | 18,5 | 40 | | 187 | 149 | 142 | 133 | 119 | 100 | 77 | 47 |
| **6LMG 48/15** | 30 | 22 | 47,5 | | 200 | 160 | 153 | 143 | 128 | 108 | 83 | 50 |

| | |
|---|---|
| **Max Eff. %** | 74 |
| **Max kW / St.** | 1,32 |

| **NPSH (m)** | Q=25% | Q=50% | Q=75% | Q=100% |
|---|---|---|---|---|
| | 3,45 | 3,5 | 3,8 | 5 |

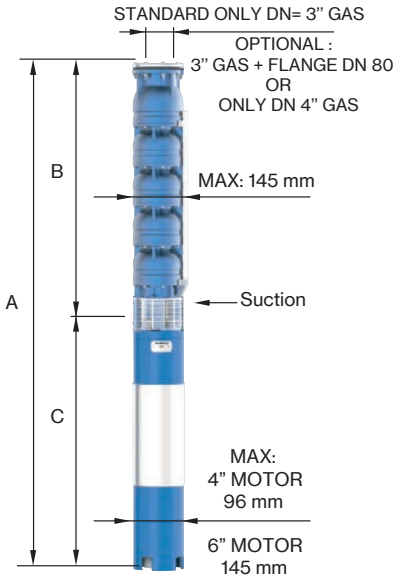


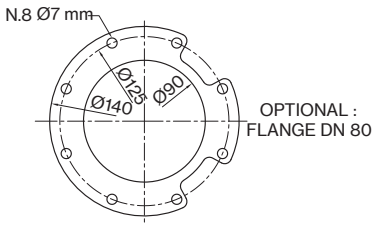


FOR COMMERCIAL TUBE
EXTERNAL DIAMETER: 88,9 mm

| TYPE 3~ | MOTOR BRACKET | DIMENSIONS (mm) | | | WEIGHT (kg) | |
|---|---|---|---|---|---|---|
| | | A | B | C | MOTOR | PUMP |
| **6LMG 48/03-4** | 4" NEMA | 1064 | 596 | 468 | 15,3 | 19 |
| **6LMG 48/04-4** | | 1235 | 697 | 538 | 18,6 | 23 |
| **6LMG 48/05** | 6" NEMA | 1499 | 798 | 701 | 55 | 28 |
| **6LMG 48/06** | | 1650 | 899 | 751 | 60 | 32 |
| **6LMG 48/07** | | 1751 | 1000 | 751 | 60 | 36 |
| **6LMG 48/08** | | 1912 | 1101 | 811 | 65 | 40 |
| **6LMG 48/09** | | 2043 | 1202 | 841 | 70 | 44 |
| **6LMG 48/10** | | 2144 | 1303 | 841 | 70 | 48 |
| **6LMG 48/11** | | 2335 | 1404 | 931 | 75 | 52 |
| **6LMG 48/12** | | 2436 | 1505 | 931 | 75 | 56 |
| **6LMG 48/13** | | 2597 | 1606 | 991 | 83 | 60 |
| **6LMG 48/14** | | 2698 | 1707 | 991 | 83 | 64 |
| **6LMG 48/15** | | 2879 | 1808 | 1071 | 92 | 69 |

# 6LMG 48

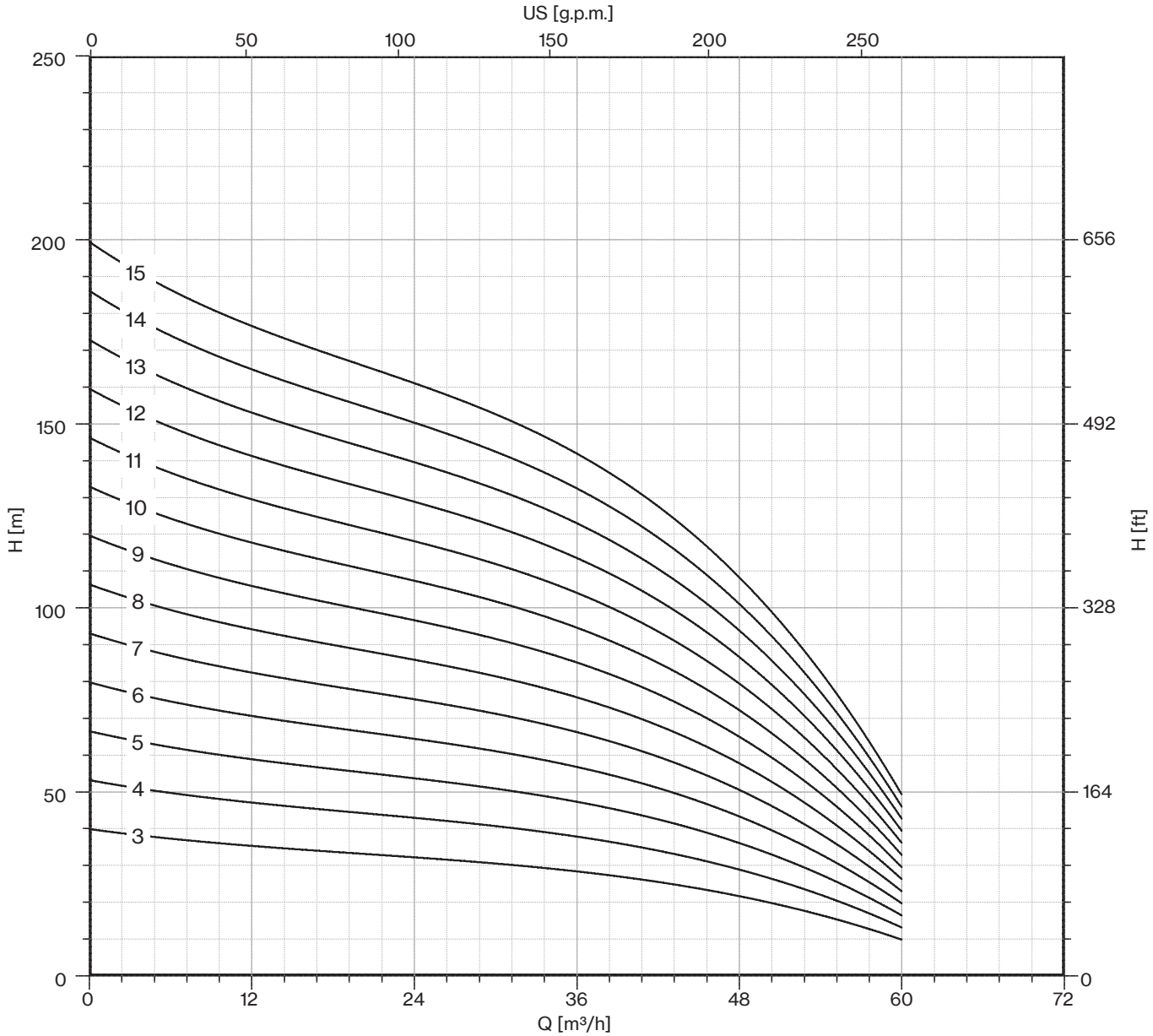


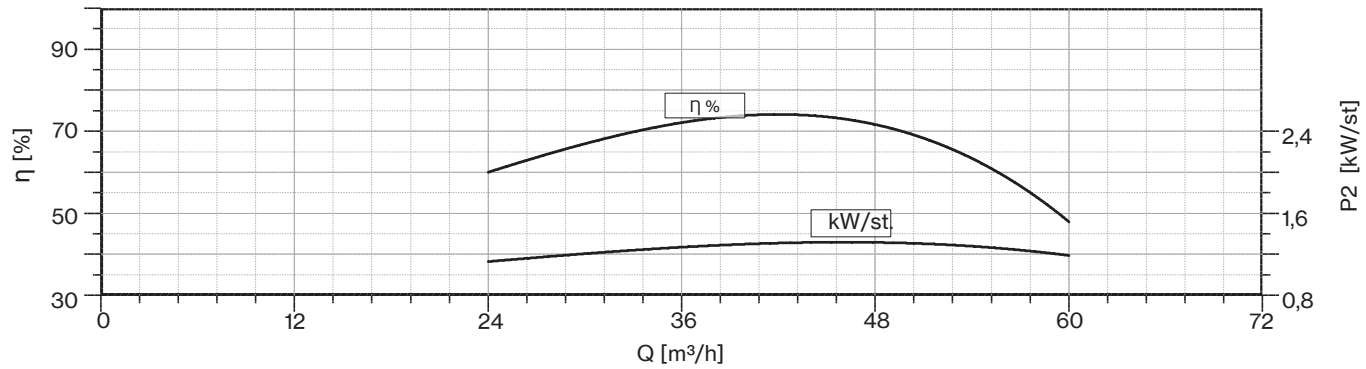




*Sand tolerance 50 g/m³*
*MEI ≥ 0,4 (regulation EU N. 547/2012)*
*Tolerances according to UNI ISO 9906 grade 3B*

| 50 Hz - 2900 rpm | | | | | Q | | | | | | | |
|---|---|---|---|---|---|---|---|---|---|---|---|---|
| TYPE | SUITABLE MOTOR 3~ 400V | | | l/min | 0 | 400 | 500 | 600 | 700 | 800 | 900 | 1000 |
| | P2 | | CURRENT | l/sec | 0 | 6,67 | 8,33 | 10,00 | 11,67 | 13,33 | 15,00 | 16,67 |
| | HP | kW | A | m³/h | 0 | 24 | 30 | 36 | 42 | 48 | 54 | 60 |
| **6LMG 48/16** | 30 | 22 | 47,5 | H (m) | 213 | 171 | 163 | 152 | 136 | 115 | 88 | 53 |
| **6LMG 48/17** | 30 | 22 | 47,5 | | 227 | 181 | 173 | 162 | 145 | 122 | 94 | 57 |
| **6LMG 48/18** | 35 | 26 | 55 | | 240 | 192 | 183 | 171 | 153 | 129 | 99 | 60 |
| **6LMG 48/19** | 35 | 26 | 55 | | 253 | 203 | 193 | 181 | 162 | 136 | 105 | 63 |
| **6LMG 48/20** | 35 | 26 | 55 | | 267 | 213 | 203 | 190 | 170 | 143 | 110 | 67 |
| **6LMG 48/21** | 40 | 30 | 62,5 | | 280 | 224 | 214 | 200 | 179 | 151 | 116 | 70 |
| **6LMG 48/22** | 40 | 30 | 62,5 | | 293 | 235 | 224 | 209 | 187 | 158 | 121 | 73 |
| **6LMG 48/23** | 40 | 30 | 62,5 | | 307 | 245 | 234 | 219 | 196 | 165 | 127 | 77 |
| **6LMG 48/24** | 50 | 37 | 78 | | 320 | 256 | 244 | 228 | 204 | 172 | 132 | 80 |
| **6LMG 48/25** | 50 | 37 | 78 | | 333 | 267 | 254 | 238 | 213 | 179 | 138 | 83 |
| **6LMG 48/26** | 50 | 37 | 78 | | 347 | 277 | 264 | 247 | 221 | 186 | 143 | 87 |
| **6LMG 48/27** | 50 | 37 | 78 | | 360 | 288 | 275 | 257 | 230 | 194 | 149 | 90 |
| **6LMG 48/28** | 50 | 37 | 78 | | 373 | 299 | 285 | 266 | 238 | 201 | 154 | 93 |

| | |
|---|---|
| **Max Eff. %** | 74 |
| **Max kW / St.** | 1,32 |

| **NPSH (m)** | Q=25% | Q=50% | Q=75% | Q=100% |
|---|---|---|---|---|
| | 3,45 | 3,5 | 3,8 | 5 |

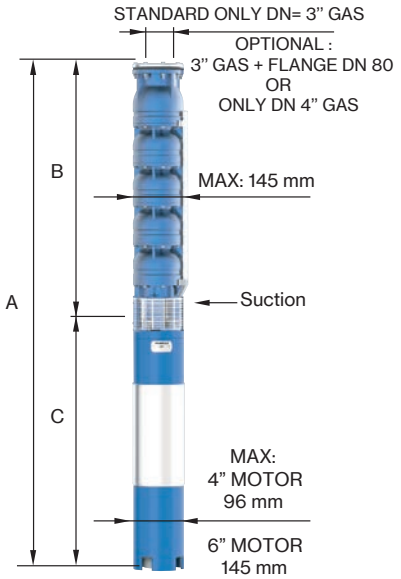


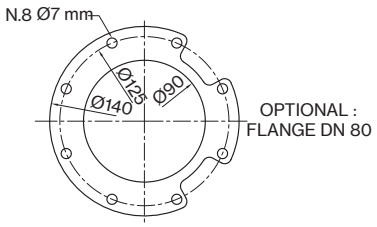


FOR COMMERCIAL TUBE
EXTERNAL DIAMETER: 88,9 mm

| TYPE 3~ | MOTOR BRACKET | DIMENSIONS (mm) | | | WEIGHT (kg) | |
|---|---|---|---|---|---|---|
| | | A | B | C | MOTOR | PUMP |
| **6LMG 48/16** | 6" NEMA | 2980 | 1909 | 1071 | 92 | 73 |
| **6LMG 48/17** | | 3081 | 2010 | 1071 | 92 | 77 |
| **6LMG 48/18** | | 3292 | 2111 | 1181 | 100 | 81 |
| **6LMG 48/19** | | 3393 | 2212 | 1181 | 100 | 85 |
| **6LMG 48/20** | | 3494 | 2313 | 1181 | 100 | 89 |
| **6LMG 48/21** | | 3665 | 2414 | 1251 | 108 | 93 |
| **6LMG 48/22** | | 3766 | 2515 | 1251 | 108 | 97 |
| **6LMG 48/23** | | 3867 | 2616 | 1251 | 108 | 101 |
| **6LMG 48/24** | | 4058 | 2717 | 1341 | 118 | 105 |
| **6LMG 48/25** | | 4159 | 2818 | 1341 | 118 | 110 |
| **6LMG 48/26** | | 4260 | 2919 | 1341 | 118 | 114 |
| **6LMG 48/27** | | 4361 | 3020 | 1341 | 118 | 118 |
| **6LMG 48/28** | | 4462 | 3121 | 1341 | 118 | 122 |

# 6LMG 48

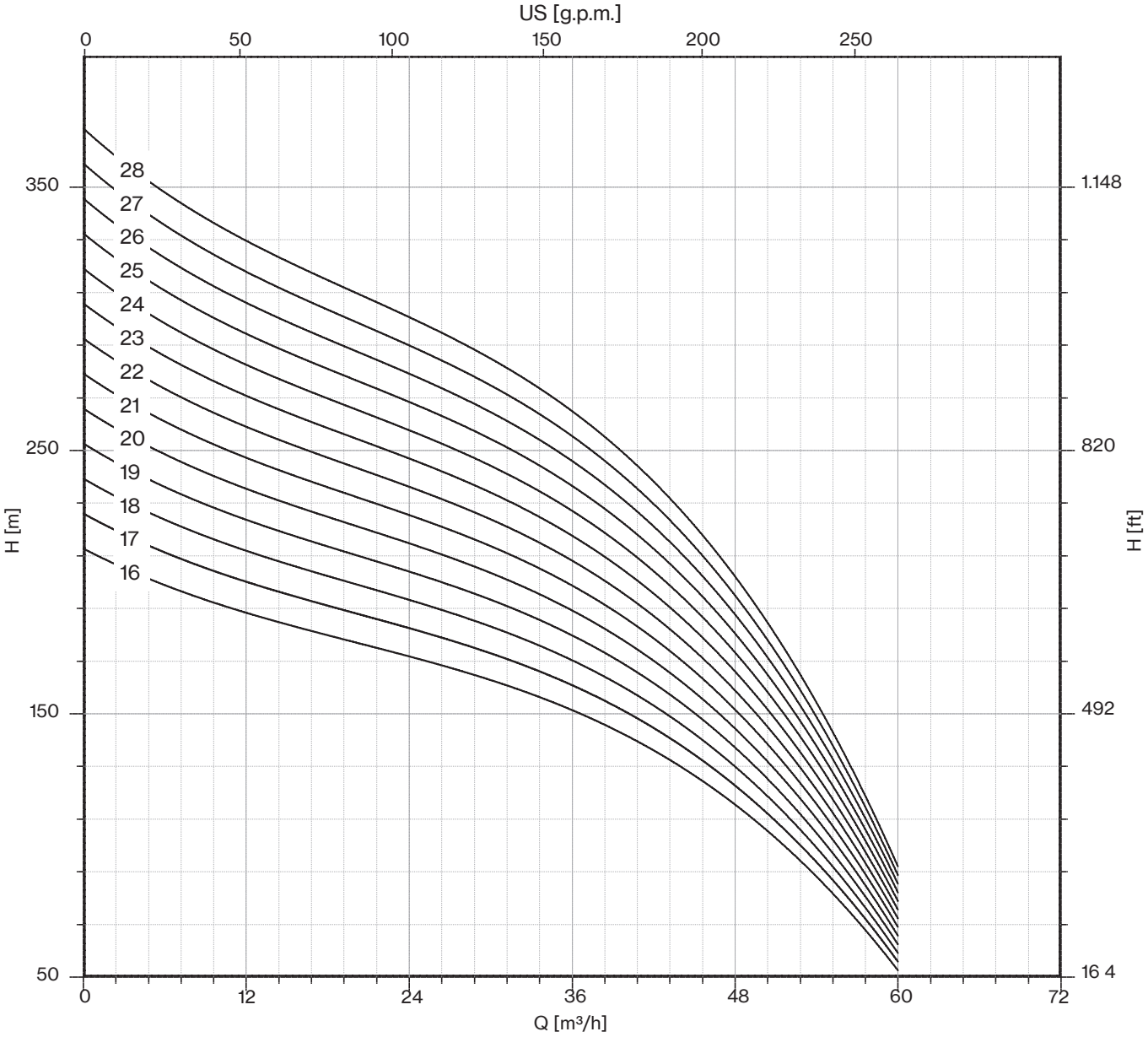


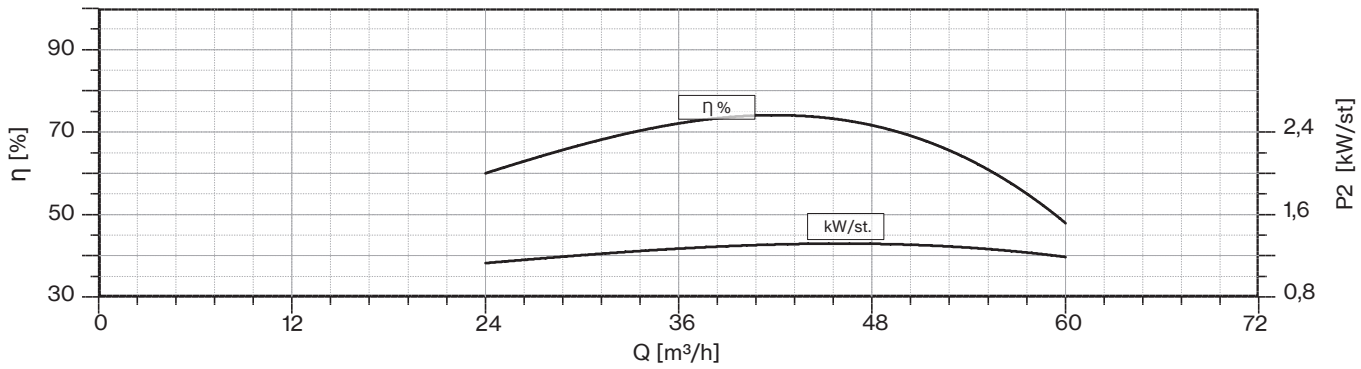




*Sand tolerance 50 g/m³*
*MEI ≥ 0,4 (regulation EU N. 547/2012)*
*Tolerances according to UNI ISO 9906 grade 3B*

| 50 Hz - 2900 rpm | | | | | Q | | | | | |
|---|---|---|---|---|---|---|---|---|---|---|
| TYPE | SUITABLE MOTOR 3~ 400V | | | l/min | 0 | 500 | 600 | 800 | 1000 | 1200 |
| | P2 | | CURRENT | l/sec | 0 | 8,33 | 10,00 | 13,33 | 16,67 | 20,00 |
| | HP | kW | A | m³/h | 0 | 30 | 36 | 48 | 60 | 72 |
| **6LMG 60/03** | 7,5 | 5,5 | 13,8 | | 39 | 30 | 28 | 24 | 18 | 8 |
| **6LMG 60/04** | 10 | 7,5 | 17,5 | | 52 | 40 | 38 | 32 | 24 | 10 |
| **6LMG 60/05** | 10 | 7,5 | 17,5 | | 65 | 50 | 47 | 40 | 30 | 13 |
| **6LMG 60/06** | 12,5 | 9,2 | 21 | | 78 | 60 | 56 | 48 | 35 | 16 |
| **6LMG 60/07** | 15 | 11 | 24,5 | | 91 | 70 | 66 | 56 | 41 | 18 |
| **6LMG 60/08** | 17,5 | 13 | 28 | | 104 | 80 | 75 | 64 | 47 | 21 |
| **6LMG 60/09** | 17,5 | 13 | 28 | | 117 | 90 | 85 | 72 | 53 | 23 |
| **6LMG 60/10** | 20 | 15 | 32 | | 130 | 100 | 94 | 80 | 59 | 26 |
| **6LMG 60/11** | 25 | 18,5 | 40 | | 143 | 110 | 103 | 87 | 65 | 29 |
| **6LMG 60/12** | 25 | 18,5 | 40 | | 156 | 120 | 113 | 95 | 71 | 31 |
| **6LMG 60/13** | 25 | 18,5 | 40 | | 169 | 130 | 122 | 103 | 77 | 34 |
| **6LMG 60/14** | 30 | 22 | 47,5 | H | 182 | 140 | 132 | 111 | 83 | 36 |
| **6LMG 60/15** | 30 | 22 | 47,5 | (m) | 195 | 150 | 141 | 119 | 89 | 39 |
| **6LMG 60/16** | 35 | 26 | 55 | | 208 | 160 | 150 | 127 | 94 | 42 |
| **6LMG 60/17** | 35 | 26 | 55 | | 221 | 170 | 160 | 135 | 100 | 44 |
| **6LMG 60/18** | 35 | 26 | 55 | | 234 | 180 | 169 | 143 | 106 | 47 |
| **6LMG 60/19** | 40 | 30 | 62,5 | | 247 | 190 | 179 | 151 | 112 | 49 |
| **6LMG 60/20** | 40 | 30 | 62,5 | | 260 | 200 | 188 | 159 | 118 | 52 |
| **6LMG 60/21** | 40 | 30 | 62,5 | | 273 | 210 | 197 | 167 | 124 | 55 |
| **6LMG 60/22** | 50 | 37 | 78 | | 286 | 220 | 207 | 175 | 130 | 57 |
| **6LMG 60/23** | 50 | 37 | 78 | | 299 | 230 | 216 | 183 | 136 | 60 |
| **6LMG 60/24** | 50 | 37 | 78 | | 312 | 240 | 226 | 191 | 142 | 62 |
| **6LMG 60/25** | 50 | 37 | 78 | | 325 | 250 | 235 | 199 | 148 | 65 |

| | |
|---|---|
| **Max Eff. %** | 73,6 |
| **Max kW / St.** | 1,44 |

| **NPSH (m)** | Q=25% | Q=50% | Q=75% | Q=100% |
|---|---|---|---|---|
| | 3,8 | 3,8 | 5,1 | 7,1 |

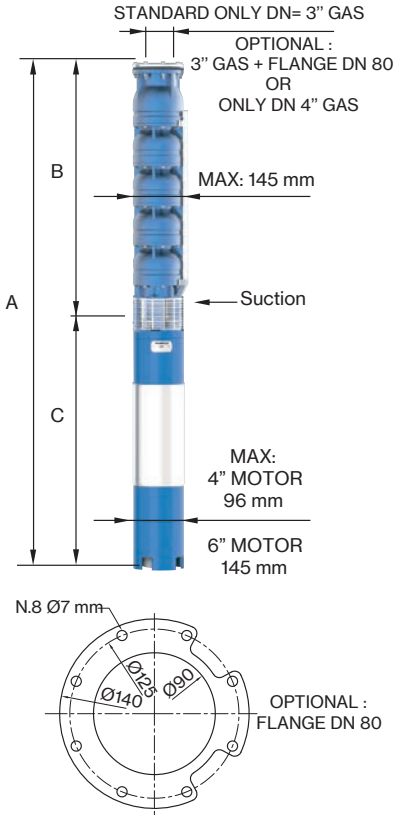


FOR COMMERCIAL TUBE
EXTERNAL DIAMETER: 88,9 mm

| TYPE 3~ | MOTOR BRACKET | DIMENSIONS (mm) | | | WEIGHT (kg) | |
|---|---|---|---|---|---|---|
| | | A | B | C | MOTOR | PUMP |
| **6LMG 60/03-4** | 4" NEMA | 1152 | 614 | 538 | 18,6 | 21 |
| **6LMG 60/04** | 6" NEMA | 1422 | 721 | 701 | 55 | 25 |
| **6LMG 60/05** | | 1529 | 828 | 701 | 55 | 30 |
| **6LMG 60/06** | | 1686 | 935 | 751 | 60 | 34 |
| **6LMG 60/07** | | 1853 | 1042 | 811 | 65 | 39 |
| **6LMG 60/08** | | 1990 | 1149 | 841 | 70 | 43 |
| **6LMG 60/09** | | 2097 | 1256 | 841 | 70 | 48 |
| **6LMG 60/10** | | 2294 | 1363 | 931 | 75 | 52 |
| **6LMG 60/11** | | 2461 | 1470 | 991 | 83 | 57 |
| **6LMG 60/12** | | 2568 | 1577 | 991 | 83 | 61 |
| **6LMG 60/13** | | 2675 | 1684 | 991 | 83 | 66 |
| **6LMG 60/14** | | 2862 | 1791 | 1071 | 92 | 70 |
| **6LMG 60/15** | | 2969 | 1898 | 1071 | 92 | 75 |
| **6LMG 60/16** | | 3186 | 2005 | 1181 | 100 | 79 |
| **6LMG 60/17** | | 3293 | 2112 | 1181 | 100 | 84 |
| **6LMG 60/18** | | 3400 | 2219 | 1181 | 100 | 88 |
| **6LMG 60/19** | | 3577 | 2326 | 1251 | 108 | 93 |
| **6LMG 60/20** | | 3684 | 2433 | 1251 | 108 | 97 |
| **6LMG 60/21** | | 3791 | 2540 | 1251 | 108 | 102 |
| **6LMG 60/22** | | 3988 | 2647 | 1341 | 118 | 106 |
| **6LMG 60/23** | | 4095 | 2754 | 1341 | 118 | 111 |
| **6LMG 60/24** | | 4202 | 2861 | 1341 | 118 | 115 |
| **6LMG 60/25** | | 4309 | 2968 | 1341 | 118 | 120 |

# 6LMG 60

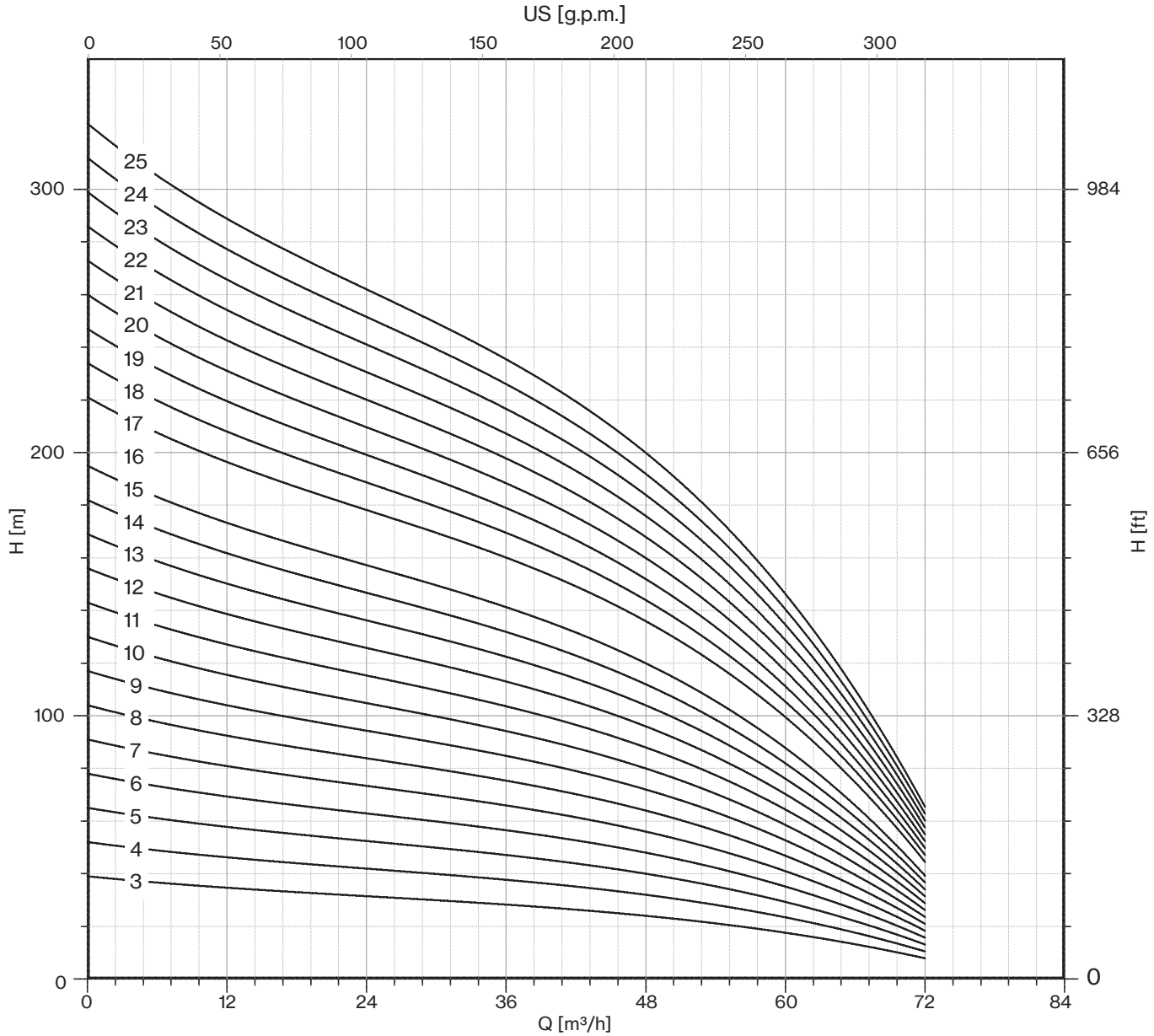


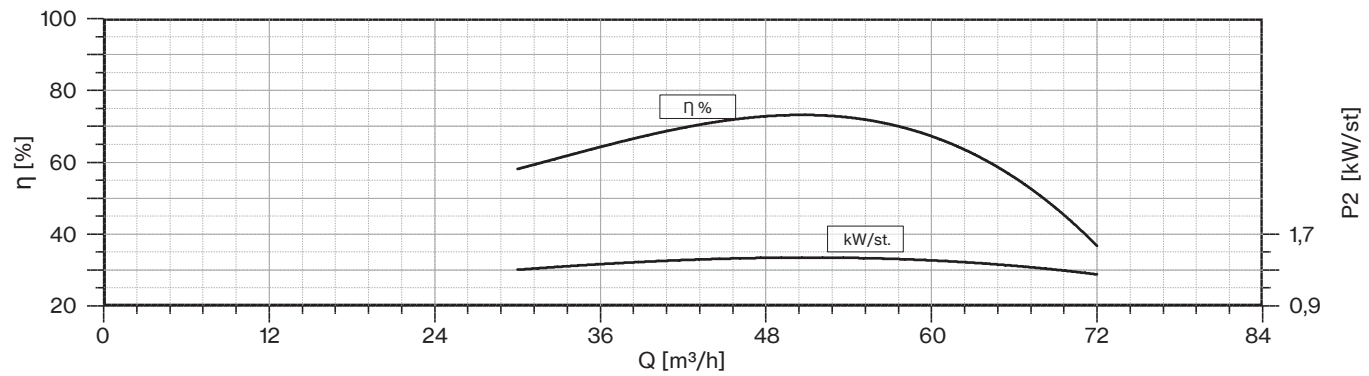




*Sand tolerance 50 g/m³*
*MEI ≥ 0,4 (regulation EU N. 547/2012)*
*Tolerances according to UNI ISO 9906 grade 3B*

| 50 Hz - 2900 rpm | | | | | Q | | | | | |
|---|---|---|---|---|---|---|---|---|---|---|
| TYPE | SUITABLE MOTOR 3~ 400V | | | l/min | 0 | 600 | 800 | 1000 | 1200 | 1400 |
| | P2 | | CURRENT | l/sec | 0 | 10,00 | 13,33 | 16,67 | 20,00 | 23,33 |
| | HP | kW | A | m³/h | 0 | 36 | 48 | 60 | 72 | 84 |
| **6LMG 70/03** | 7,5 | 5,5 | 13,8 | H (m) | 39 | 29 | 26 | 23 | 17 | 6 |
| **6LMG 70/04** | 10 | 7,5 | 17,5 | | 52 | 39 | 35 | 31 | 23 | 8 |
| **6LMG 70/05** | 12,5 | 9,2 | 21 | | 65 | 49 | 44 | 39 | 29 | 10 |
| **6LMG 70/06** | 15 | 11 | 24,5 | | 78 | 59 | 53 | 47 | 34 | 12 |
| **6LMG 70/07** | 17,5 | 13 | 28 | | 91 | 69 | 62 | 55 | 40 | 14 |
| **6LMG 70/08** | 20 | 15 | 32 | | 104 | 78 | 70 | 62 | 46 | 16 |
| **6LMG 70/09** | 20 | 15 | 32 | | 117 | 88 | 79 | 70 | 51 | 18 |
| **6LMG 70/10** | 25 | 18,5 | 40 | | 130 | 98 | 88 | 78 | 57 | 20 |
| **6LMG 70/11** | 30 | 22 | 47,5 | | 143 | 108 | 97 | 86 | 63 | 22 |
| **6LMG 70/12** | 30 | 22 | 47,5 | | 156 | 118 | 106 | 94 | 68 | 24 |
| **6LMG 70/13** | 30 | 22 | 47,5 | | 169 | 127 | 114 | 101 | 74 | 26 |
| **6LMG 70/14** | 35 | 26 | 55 | | 182 | 137 | 123 | 109 | 80 | 28 |
| **6LMG 70/15** | 35 | 26 | 55 | | 195 | 147 | 132 | 117 | 86 | 30 |
| **6LMG 70/16** | 40 | 30 | 62,5 | | 208 | 157 | 141 | 125 | 91 | 32 |
| **6LMG 70/17** | 40 | 30 | 62,5 | | 221 | 167 | 150 | 133 | 97 | 34 |
| **6LMG 70/18** | 50 | 37 | 78 | | 234 | 176 | 158 | 140 | 103 | 36 |
| **6LMG 70/19** | 50 | 37 | 78 | | 247 | 186 | 167 | 148 | 108 | 38 |
| **6LMG 70/20** | 50 | 37 | 78 | | 260 | 196 | 176 | 156 | 114 | 40 |
| **6LMG 70/21** | 50 | 37 | 78 | | 273 | 206 | 185 | 164 | 120 | 42 |

| | |
|---|---|
| **Max Eff. %** | 74 |
| **Max kW / St.** | 1,74 |

| **NPSH (m)** | Q=25% | Q=50% | Q=75% | Q=100% |
|---|---|---|---|---|
| | 3,8 | 3,8 | 5,1 | 7,1 |

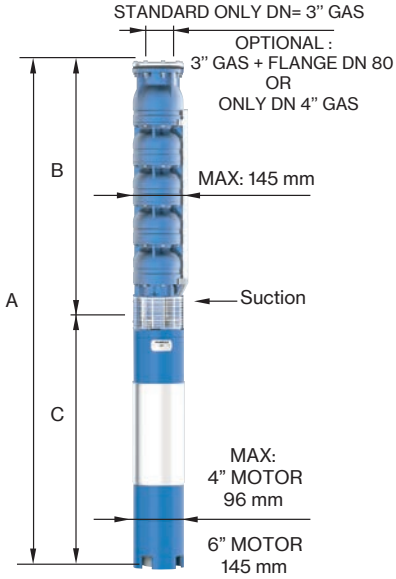


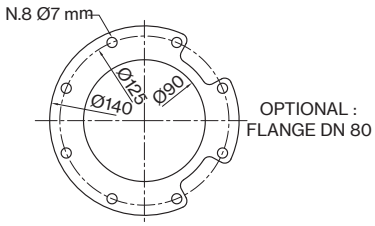


FOR COMMERCIAL TUBE
EXTERNAL DIAMETER: 88,9 mm

| TYPE 3~ | MOTOR BRACKET | DIMENSIONS (mm) | | | WEIGHT (kg) | |
|---|---|---|---|---|---|---|
| | | A | B | C | MOTOR | PUMP |
| **6LMG 70/03-4** | 4" NEMA | 1152 | 614 | 538 | 18,6 | 21 |
| **6LMG 70/04** | 6" NEMA | 1422 | 721 | 701 | 55 | 25 |
| **6LMG 70/05** | | 1579 | 828 | 751 | 60 | 30 |
| **6LMG 70/06** | | 1746 | 935 | 811 | 65 | 34 |
| **6LMG 70/07** | | 1883 | 1042 | 841 | 70 | 39 |
| **6LMG 70/08** | | 2080 | 1149 | 931 | 75 | 43 |
| **6LMG 70/09** | | 2187 | 1256 | 931 | 75 | 48 |
| **6LMG 70/10** | | 2354 | 1363 | 991 | 83 | 52 |
| **6LMG 70/11** | | 2541 | 1470 | 1071 | 92 | 57 |
| **6LMG 70/12** | | 2648 | 1577 | 1071 | 92 | 61 |
| **6LMG 70/13** | | 2755 | 1684 | 1071 | 92 | 66 |
| **6LMG 70/14** | | 2972 | 1791 | 1181 | 100 | 70 |
| **6LMG 70/15** | | 3079 | 1898 | 1181 | 100 | 75 |
| **6LMG 70/16** | | 3256 | 2005 | 1251 | 108 | 79 |
| **6LMG 70/17** | | 3363 | 2112 | 1251 | 108 | 84 |
| **6LMG 70/18** | | 3560 | 2219 | 1341 | 118 | 88 |
| **6LMG 70/19** | | 3667 | 2326 | 1341 | 118 | 93 |
| **6LMG 70/20** | | 3774 | 2433 | 1341 | 118 | 97 |
| **6LMG 70/21** | | 3881 | 2540 | 1341 | 118 | 102 |

# 6LMG 70

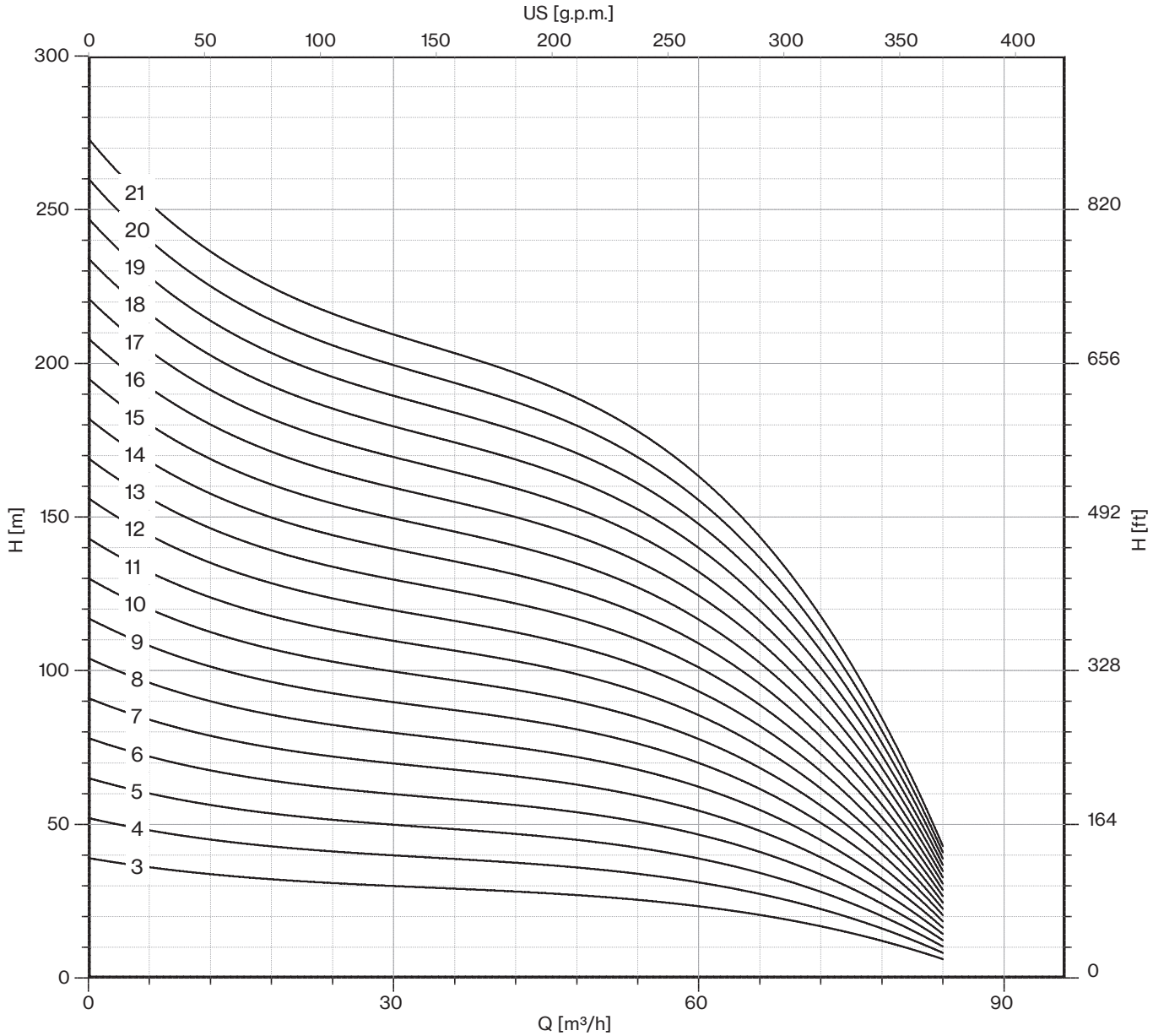


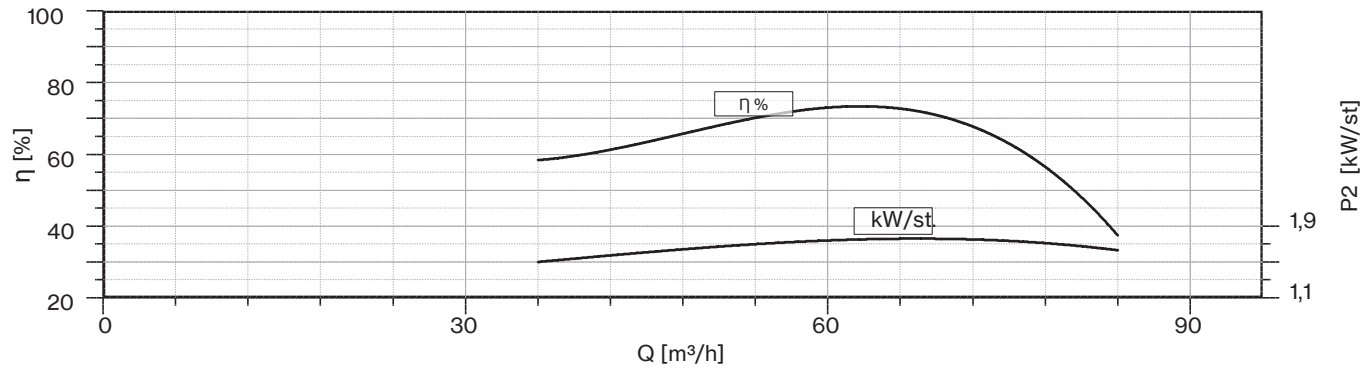




*Sand tolerance 50 g/m³*
*MEI ≥ 0,4 (regulation EU N. 547/2012)*
*Tolerances according to UNI ISO 9906 grade 3B*

| 50 Hz - 2900 rpm | | | | | Q | | | | | | |
|---|---|---|---|---|---|---|---|---|---|---|---|
| TYPE | SUITABLE MOTOR 3~ 400V | | | l/min | 0 | 600 | 800 | 1000 | 1200 | 1400 | 1600 |
| | P2 | | CURRENT | l/sec | 0 | 10,00 | 13,33 | 16,67 | 20,00 | 23,33 | 26,67 |
| | HP | kW | A | m³/h | 0 | 36 | 48 | 60 | 72 | 84 | 96 |
| **8LMG 80/01** | 7,5 | 5,5 | 12,5 | H (m) | 26 | 22 | 21 | 19 | 18 | 15 | 11 |
| **8LMG 80/02** | 15 | 11 | 24,5 | | 53 | 45 | 42 | 39 | 35 | 30 | 23 |
| **8LMG 80/03** | 20 | 15 | 32 | | 79 | 67 | 63 | 58 | 53 | 44 | 34 |
| **8LMG 80/04** | 30 | 22 | 47,5 | | 105 | 89 | 84 | 78 | 70 | 59 | 45 |
| **8LMG 80/05** | 35 | 26 | 55 | | 131 | 111 | 105 | 97 | 88 | 74 | 56 |
| **8LMG 80/06** | 40 | 30 | 62,5 | | 158 | 134 | 126 | 116 | 105 | 89 | 68 |
| **8LMG 80/07** | 50 | 37 | 78 | | 184 | 156 | 147 | 136 | 123 | 103 | 79 |
| **8LMG 80/08** | 60 | 45 | 92 | | 210 | 178 | 168 | 155 | 140 | 118 | 90 |
| **8LMG 80/09** | 60 | 45 | 92 | | 236 | 200 | 189 | 174 | 158 | 133 | 101 |
| **8LMG 80/10** | 75 | 55 | 113,5 | | 263 | 223 | 210 | 194 | 175 | 148 | 113 |
| **8LMG 80/11** | 75 | 55 | 113,5 | | 289 | 245 | 231 | 213 | 193 | 162 | 124 |
| **8LMG 80/12** | 90 | 66 | 134,5 | | 315 | 267 | 252 | 233 | 210 | 177 | 135 |
| **8LMG 80/13** | 90 | 66 | 134,5 | | 341 | 289 | 273 | 252 | 228 | 192 | 146 |
| **8LMG 80/14** | 100 | 75 | 149,5 | | 368 | 312 | 294 | 271 | 245 | 207 | 158 |
| **8LMG 80/15** | 100 | 75 | 149,5 | | 394 | 334 | 315 | 291 | 263 | 221 | 169 |

| | |
|---|---|
| **Max Eff. %** | 70 |
| **Max kW / St.** | 5,1 |

| **NPSH (m)** | Q=25% | Q=50% | Q=75% | Q=100% |
|---|---|---|---|---|
| | 3 | 3 | 3,5 | 4,5 |

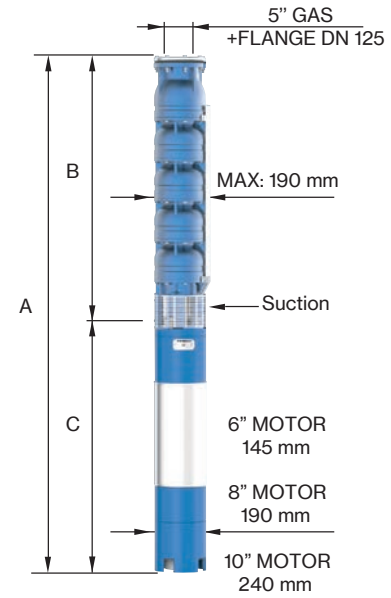


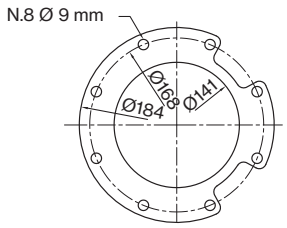


FOR COMMERCIAL TUBE
EXTERNAL DIAMETER: 139,7 mm

| TYPE 3~ | MOTOR BRACKET | DIMENSIONS (mm) | | | WEIGHT (kg) | |
|---|---|---|---|---|---|---|
| | | A | B | C | MOTOR | PUMP |
| **8LMG 80/01-6** | 6" NEMA | 1198 | 527 | 671 | 45 | 23 |
| **8LMG 80/02-6** | | 1463 | 652 | 811 | 65 | 31 |
| **8LMG 80/03-6** | | 1708 | 777 | 931 | 75 | 39 |
| **8LMG 80/04-6** | | 1973 | 902 | 1071 | 92 | 48 |
| **8LMG 80/05-6** | | 2208 | 1027 | 1181 | 100 | 56 |
| **8LMG 80/06-6** | | 2403 | 1152 | 1251 | 108 | 64 |
| **8LMG 80/07-6** | | 2618 | 1277 | 1341 | 118 | 73 |
| **8LMG 80/08** | 8" NEMA | 2525 | 1402 | 1123 | 178 | 81 |
| **8LMG 80/09** | | 2650 | 1527 | 1123 | 178 | 89 |
| **8LMG 80/10** | | 2885 | 1652 | 1233 | 200 | 98 |
| **8LMG 80/11** | | 3010 | 1777 | 1233 | 200 | 106 |
| **8LMG 80/12** | | 3205 | 1902 | 1303 | 214 | 114 |
| **8LMG 80/13** | | 3330 | 2027 | 1303 | 214 | 122 |
| **8LMG 80/14** | | 3535 | 2152 | 1383 | 230 | 131 |
| **8LMG 80/15** | | 3660 | 2277 | 1383 | 230 | 139 |

*Sand tolerance 50 g/m³*
*Tolerances according to UNI ISO 9906 grade 3B*

# 8LMG 80

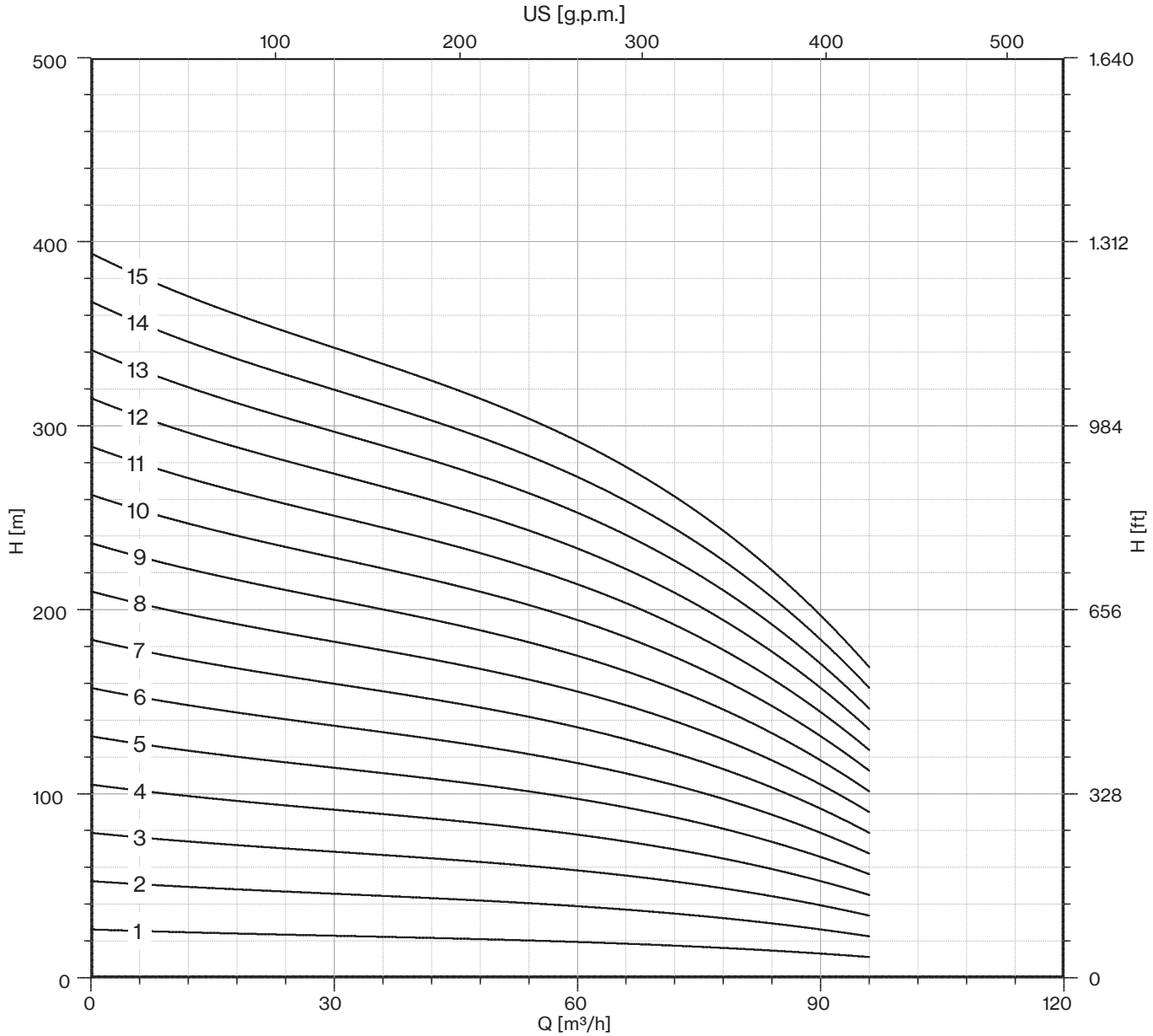


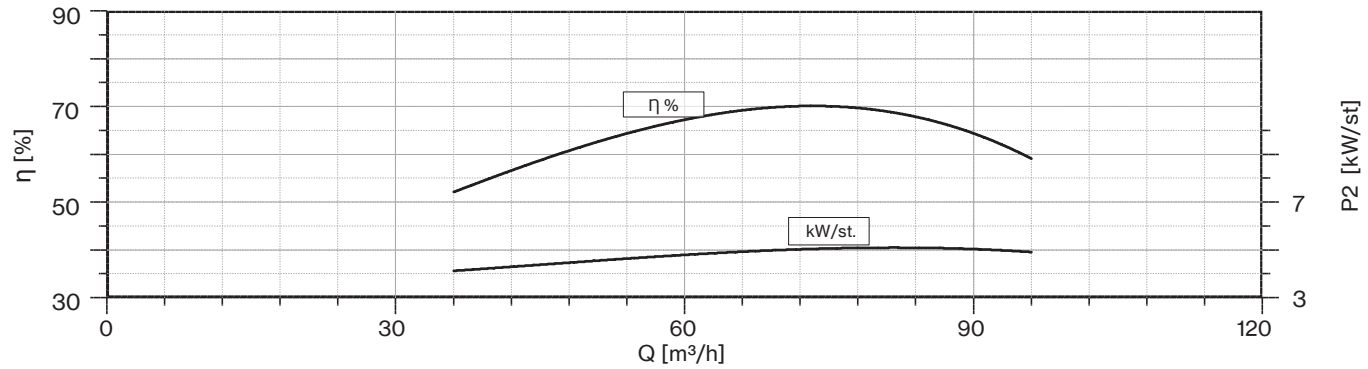




*Sand tolerance 50 g/m³*
*Tolerances according to UNI ISO 9906 grade 3B*

| 50 Hz - 2900 rpm | | | | | Q | | | | | | | |
|---|---|---|---|---|---|---|---|---|---|---|---|---|
| TYPE | SUITABLE MOTOR 3~ 400V | | | l/min | 0 | 800 | 1000 | 1200 | 1400 | 1600 | 1800 | 2000 |
| | P2 | | CURRENT | l/sec | 0 | 13,33 | 16,67 | 20,00 | 23,33 | 26,67 | 30,00 | 33,33 |
| | HP | kW | A | m³/h | 0 | 48 | 60 | 72 | 84 | 96 | 108 | 120 |
| **8LMG 92/01** | 10 | 7,5 | 17,5 | H (m) | 26 | 22 | 21 | 20 | 18 | 15 | 13 | 10 |
| **8LMG 92/02** | 17,5 | 13 | 28 | | 53 | 44 | 42 | 39 | 35 | 31 | 25 | 20 |
| **8LMG 92/03** | 25 | 18,5 | 40 | | 79 | 66 | 63 | 59 | 53 | 46 | 38 | 29 |
| **8LMG 92/04** | 35 | 26 | 55 | | 105 | 89 | 84 | 78 | 70 | 61 | 50 | 39 |
| **8LMG 92/05** | 40 | 30 | 62,5 | | 131 | 111 | 104 | 98 | 88 | 76 | 63 | 49 |
| **8LMG 92/06** | 50 | 37 | 78 | | 158 | 133 | 125 | 117 | 105 | 92 | 75 | 59 |
| **8LMG 92/07** | 60 | 45 | 92 | | 184 | 155 | 146 | 137 | 123 | 107 | 88 | 68 |
| **8LMG 92/08** | 75 | 55 | 113,5 | | 210 | 177 | 167 | 156 | 140 | 122 | 100 | 78 |
| **8LMG 92/09** | 75 | 55 | 113,5 | | 236 | 199 | 188 | 176 | 158 | 137 | 113 | 88 |
| **8LMG 92/10** | 90 | 66 | 134,5 | | 263 | 221 | 209 | 195 | 175 | 153 | 125 | 98 |
| **8LMG 92/11** | 90 | 66 | 134,5 | | 289 | 243 | 230 | 215 | 193 | 168 | 138 | 107 |
| **8LMG 92/12** | 100 | 75 | 149,5 | | 315 | 266 | 251 | 234 | 210 | 183 | 150 | 117 |
| **8LMG 92/13** | 100 | 75 | 149,5 | | 341 | 288 | 271 | 254 | 228 | 198 | 163 | 127 |
| **8LMG 92/14** | 125 | 92 | 185 | | 368 | 310 | 292 | 273 | 245 | 214 | 175 | 137 |
| **8LMG 92/15** | 125 | 92 | 185 | | 394 | 332 | 313 | 293 | 263 | 229 | 188 | 146 |

| | |
|---|---|
| **Max Eff. %** | 70 |
| **Max kW / St.** | 5,9 |

| **NPSH (m)** | Q=25% | Q=50% | Q=75% | Q=100% |
|---|---|---|---|---|
| | 3 | 4 | 5 | 8 |

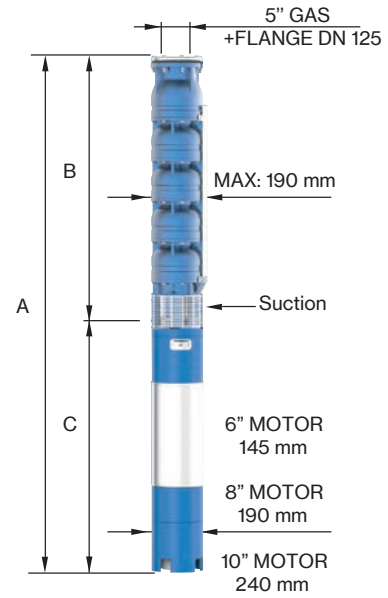


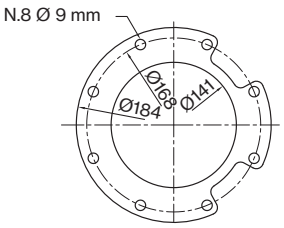


FOR COMMERCIAL TUBE
EXTERNAL DIAMETER: 139,7 mm

| TYPE 3~ | MOTOR BRACKET | DIMENSIONS (mm) | | | WEIGHT (kg) | |
|---|---|---|---|---|---|---|
| | | A | B | C | MOTOR | PUMP |
| **8LMG 92/01-6** | 6" NEMA | 1228 | 527 | 701 | 55 | 23 |
| **8LMG 92/02-6** | | 1493 | 652 | 841 | 70 | 31 |
| **8LMG 92/03-6** | | 1768 | 777 | 991 | 83 | 39 |
| **8LMG 92/04-6** | | 2083 | 902 | 1181 | 100 | 48 |
| **8LMG 92/05-6** | | 2278 | 1027 | 1251 | 108 | 56 |
| **8LMG 92/06-6** | | 2493 | 1152 | 1341 | 118 | 64 |
| **8LMG 92/07** | 8" NEMA | 2400 | 1277 | 1123 | 178 | 73 |
| **8LMG 92/08** | | 2635 | 1402 | 1233 | 200 | 81 |
| **8LMG 92/09** | | 2760 | 1527 | 1233 | 200 | 89 |
| **8LMG 92/10** | | 2955 | 1652 | 1303 | 214 | 98 |
| **8LMG 92/11** | | 3080 | 1777 | 1303 | 214 | 106 |
| **8LMG 92/12** | | 3285 | 1902 | 1383 | 230 | 114 |
| **8LMG 92/13** | | 3410 | 2027 | 1383 | 230 | 122 |
| **8LMG 92/14** | | 3735 | 2152 | 1583 | 270 | 131 |
| **8LMG 92/15** | | 3860 | 2277 | 1583 | 270 | 139 |

# 8LMG 92

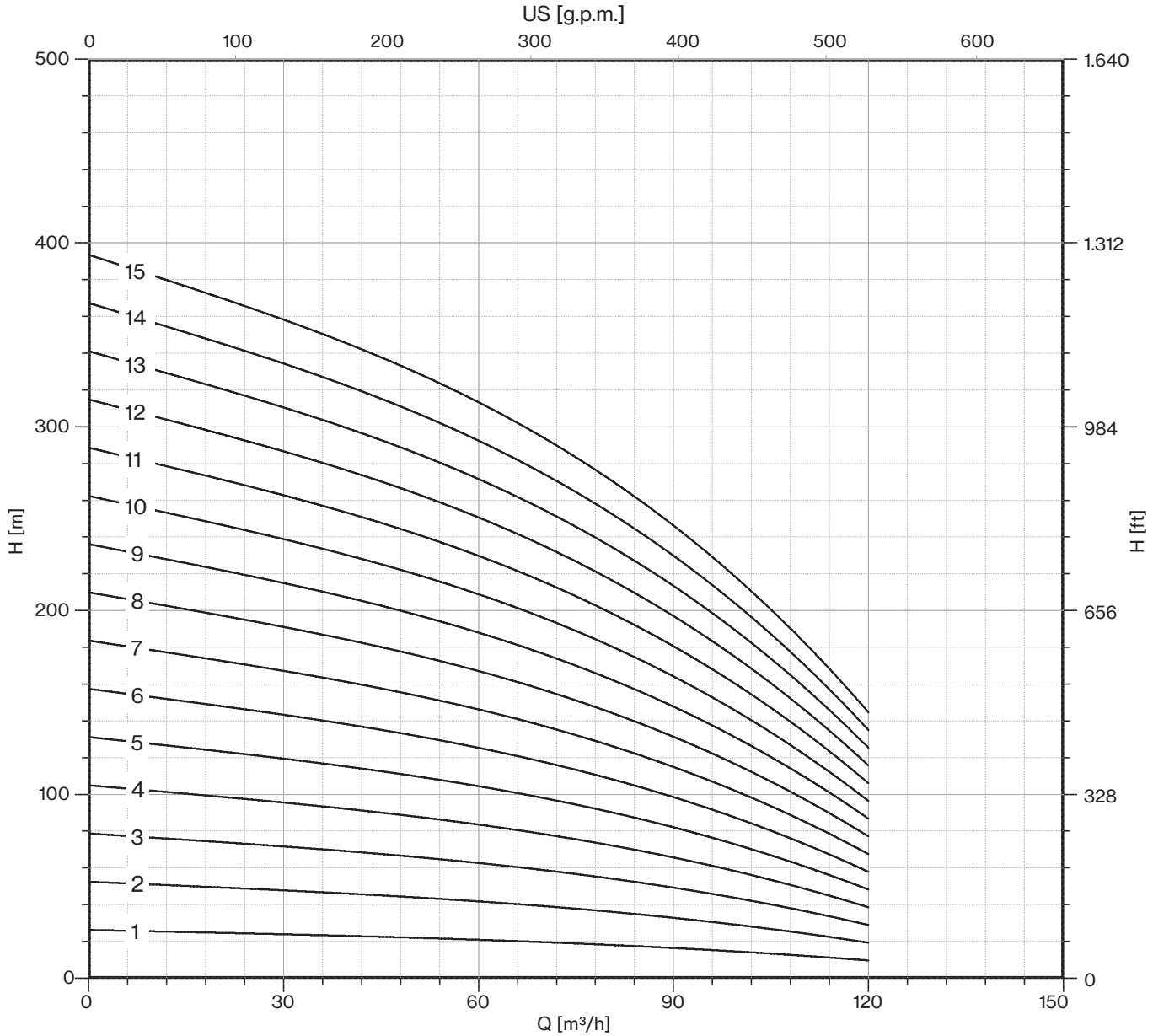


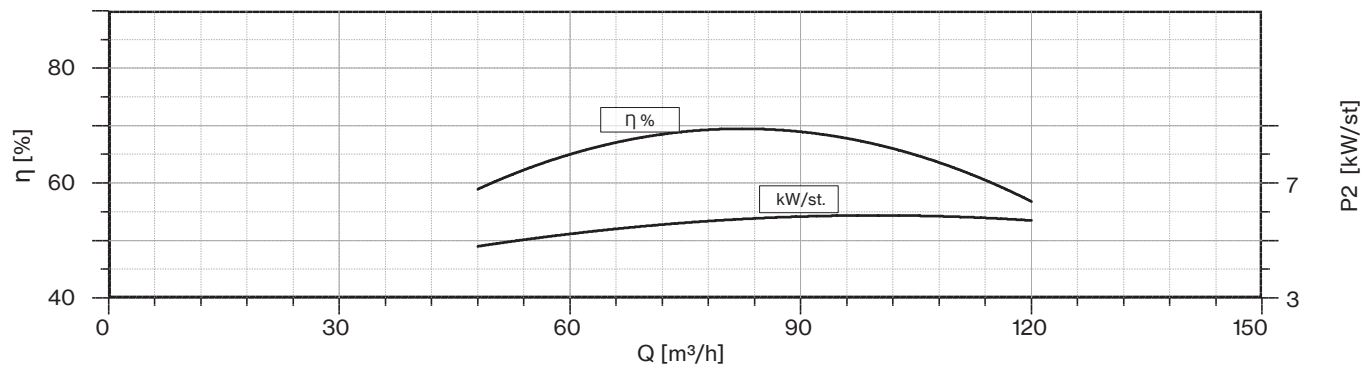




*Sand tolerance 50 g/m³*
*Tolerances according to UNI ISO 9906 grade 3B*

| 50 Hz - 2900 rpm | | | | | Q | | | | | | | | |
|---|---|---|---|---|---|---|---|---|---|---|---|---|---|
| TYPE | SUITABLE MOTOR 3~ 400V | | | l/min | 0 | 1000 | 1200 | 1400 | 1600 | 1800 | 2000 | 2200 | 2400 |
| | P2 | | CURRENT | l/sec | 0 | 16,67 | 20,00 | 23,33 | 26,67 | 30,00 | 33,33 | 36,67 | 40,00 |
| | HP | kW | A | m³/h | 0 | 60 | 72 | 84 | 96 | 108 | 120 | 132 | 144 |
| **8LMG 110/01** | 10 | 7,5 | 17,5 | H (m) | 26 | 22 | 21 | 20 | 19 | 18 | 16 | 14 | 11 |
| **8LMG 110/02** | 20 | 15 | 32 | | 53 | 44 | 42 | 40 | 38 | 35 | 32 | 28 | 22 |
| **8LMG 110/03** | 30 | 22 | 47,5 | | 79 | 66 | 63 | 60 | 57 | 53 | 48 | 42 | 33 |
| **8LMG 110/04** | 40 | 30 | 62,5 | | 105 | 87 | 84 | 80 | 76 | 71 | 65 | 55 | 45 |
| **8LMG 110/05** | 50 | 37 | 78 | | 131 | 109 | 105 | 100 | 95 | 89 | 81 | 69 | 56 |
| **8LMG 110/06** | 60 | 45 | 92 | | 158 | 131 | 126 | 120 | 114 | 106 | 97 | 83 | 67 |
| **8LMG 110/07** | 75 | 55 | 113,5 | | 184 | 153 | 147 | 140 | 133 | 124 | 113 | 97 | 78 |
| **8LMG 110/08** | 90 | 66 | 134,5 | | 210 | 175 | 168 | 160 | 152 | 142 | 129 | 111 | 89 |
| **8LMG 110/09** | 90 | 66 | 134,5 | | 237 | 197 | 189 | 180 | 171 | 159 | 145 | 125 | 100 |
| **8LMG 110/10** | 100 | 75 | 149,5 | | 263 | 219 | 210 | 200 | 190 | 177 | 161 | 139 | 111 |
| **8LMG 110/11** | 125 | 92 | 185 | | 289 | 240 | 231 | 220 | 209 | 195 | 178 | 152 | 123 |
| **8LMG 110/12** | 125 | 92 | 185 | | 315 | 262 | 252 | 240 | 228 | 213 | 194 | 166 | 134 |
| **8LMG 110/13** | 125 | 92 | 185 | | 342 | 284 | 273 | 260 | 247 | 230 | 210 | 180 | 145 |

| | |
|---|---|
| **Max Eff. %** | 74 |
| **Max kW / St.** | 7,3 |

| **NPSH (m)** | Q=25% | Q=50% | Q=75% | Q=100% |
|---|---|---|---|---|
| | 2,5 | 3,5 | 4,5 | 8 |

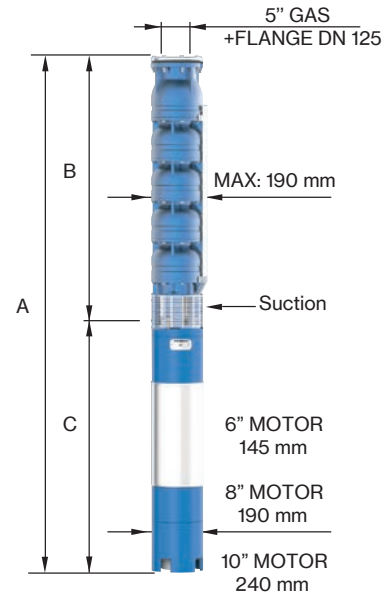


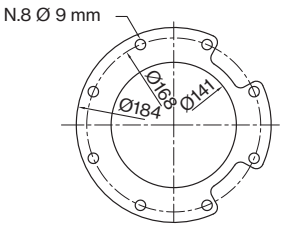


FOR COMMERCIAL TUBE
EXTERNAL DIAMETER: 139,7 mm

| TYPE 3~ | MOTOR BRACKET | DIMENSIONS (mm) | | | WEIGHT (kg) | |
|---|---|---|---|---|---|---|
| | | A | B | C | MOTOR | PUMP |
| **8LMG 110/01-6** | 6" NEMA | 1228 | 527 | 701 | 55 | 23 |
| **8LMG 110/02-6** | | 1583 | 652 | 931 | 75 | 32 |
| **8LMG 110/03-6** | | 1848 | 777 | 1071 | 92 | 40 |
| **8LMG 110/04-6** | | 2153 | 902 | 1251 | 108 | 49 |
| **8LMG 110/05-6** | | 2368 | 1027 | 1341 | 118 | 58 |
| **8LMG 110/06** | 8" NEMA | 2275 | 1152 | 1123 | 178 | 66 |
| **8LMG 110/07** | | 2510 | 1277 | 1233 | 200 | 75 |
| **8LMG 110/08** | | 2705 | 1402 | 1303 | 214 | 83 |
| **8LMG 110/09** | | 2830 | 1527 | 1303 | 214 | 92 |
| **8LMG 110/10** | | 3035 | 1652 | 1383 | 230 | 101 |
| **8LMG 110/11** | | 3360 | 1777 | 1583 | 270 | 109 |
| **8LMG 110/12** | | 3485 | 1902 | 1583 | 270 | 118 |
| **8LMG 110/13** | | 3610 | 2027 | 1583 | 270 | 126 |

# 8LMG 110

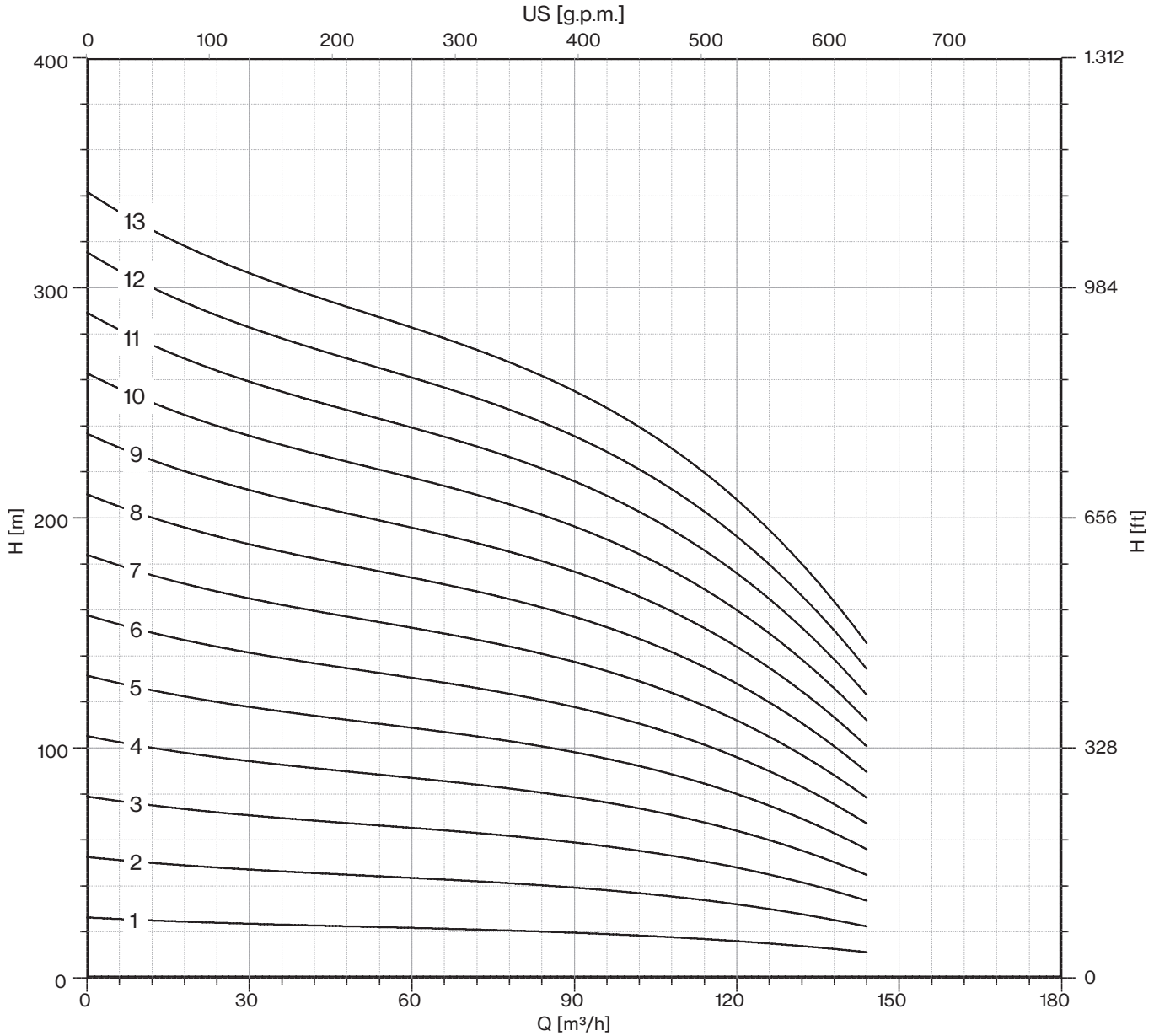


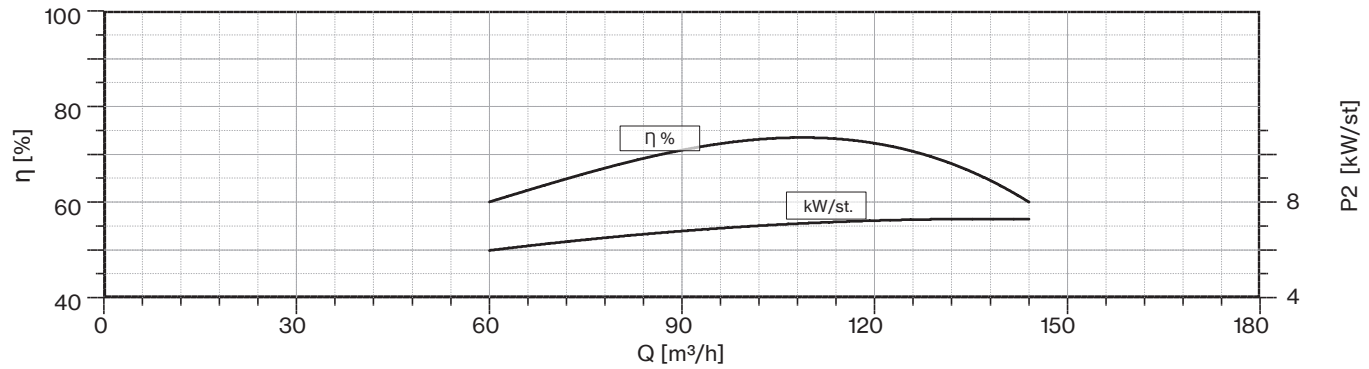




*Sand tolerance 50 g/m³*
*Tolerances according to UNI ISO 9906 grade 3B*

| 50 Hz - 2900 rpm | | | | | Q | | | | | | | | | |
|---|---|---|---|---|---|---|---|---|---|---|---|---|---|---|
| TYPE | SUITABLE MOTOR 3~ 400V | | | l/min | 0 | 1200 | 1400 | 1600 | 1800 | 2000 | 2200 | 2400 | 2600 | 2800 |
| | P2 | | CURRENT | l/sec | 0 | 20,00 | 23,33 | 26,67 | 30,00 | 33,33 | 36,67 | 40,00 | 43,33 | 46,67 |
| | HP | kW | A | m³/h | 0 | 72 | 84 | 96 | 108 | 120 | 132 | 144 | 156 | 168 |
| **8LMG 130/01** | 10 | 7,5 | 17,5 | H (m) | 26 | 21 | 20 | 19 | 18 | 17 | 15 | 13 | 11 | 8 |
| **8LMG 130/02** | 20 | 15 | 32 | | 53 | 42 | 41 | 38 | 36 | 34 | 31 | 27 | 21 | 15 |
| **8LMG 130/03** | 35 | 26 | 55 | | 79 | 63 | 61 | 57 | 54 | 51 | 46 | 40 | 32 | 23 |
| **8LMG 130/04** | 40 | 30 | 62,5 | | 106 | 85 | 81 | 77 | 73 | 67 | 62 | 54 | 43 | 30 |
| **8LMG 130/05** | 60 | 45 | 92 | | 132 | 106 | 101 | 96 | 91 | 84 | 77 | 67 | 54 | 38 |
| **8LMG 130/06** | 75 | 55 | 113,5 | | 159 | 127 | 122 | 115 | 109 | 101 | 93 | 81 | 64 | 45 |
| **8LMG 130/07** | 75 | 55 | 113,5 | | 185 | 148 | 142 | 134 | 127 | 118 | 108 | 94 | 75 | 53 |
| **8LMG 130/08** | 90 | 66 | 134,5 | | 211 | 169 | 162 | 153 | 145 | 135 | 123 | 107 | 86 | 61 |
| **8LMG 130/09** | 100 | 75 | 149,5 | | 238 | 190 | 183 | 172 | 163 | 152 | 139 | 121 | 96 | 68 |
| **8LMG 130/10** | 100 | 75 | 149,5 | | 264 | 211 | 203 | 191 | 181 | 169 | 154 | 134 | 107 | 76 |
| **8LMG 130/11** | 125 | 92 | 185 | | 291 | 233 | 223 | 211 | 200 | 185 | 170 | 148 | 118 | 83 |
| **8LMG 130/12** | 125 | 92 | 185 | | 317 | 254 | 243 | 230 | 218 | 202 | 185 | 161 | 129 | 91 |
| **8LMG 130/13** | 150 | 110 | 219 | | 344 | 275 | 264 | 249 | 236 | 219 | 201 | 175 | 139 | 98 |
| **8LMG 130/14** | 150 | 110 | 220 | | 370 | 296 | 284 | 268 | 254 | 236 | 216 | 188 | 150 | 106 |

| | |
|---|---|
| **Max Eff. %** | 75 |
| **Max kW / St.** | 7,7 |

| **NPSH (m)** | Q=25% | Q=50% | Q=75% | Q=100% |
|---|---|---|---|---|
| | 2,5 | 3 | 5 | 9 |

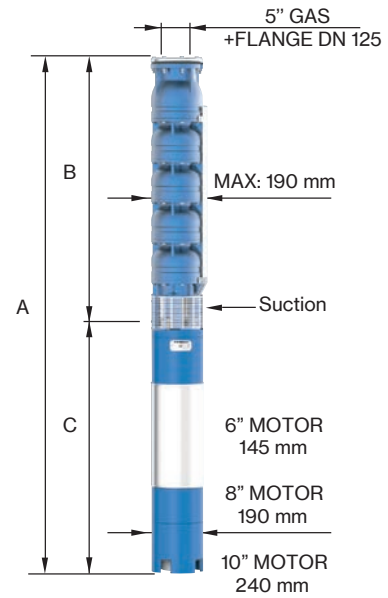


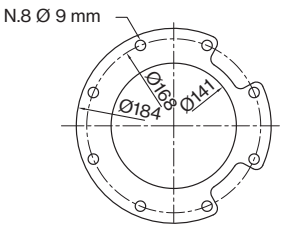


FOR COMMERCIAL TUBE
EXTERNAL DIAMETER: 139,7 mm

| TYPE 3~ | MOTOR BRACKET | DIMENSIONS (mm) | | | WEIGHT (kg) | |
|---|---|---|---|---|---|---|
| | | A | B | C | MOTOR | PUMP |
| **8LMG 130/01-6** | 6" NEMA | 1228 | 527 | 701 | 55 | 23 |
| **8LMG 130/02-6** | | 1583 | 652 | 931 | 75 | 32 |
| **8LMG 130/03-6** | | 1958 | 777 | 1181 | 100 | 41 |
| **8LMG 130/04-6** | | 2153 | 902 | 1251 | 108 | 49 |
| **8LMG 130/05** | 8" NEMA | 2150 | 1027 | 1123 | 178 | 58 |
| **8LMG 130/06** | | 2385 | 1152 | 1233 | 200 | 67 |
| **8LMG 130/07** | | 2510 | 1277 | 1233 | 200 | 75 |
| **8LMG 130/08** | | 2705 | 1402 | 1303 | 214 | 84 |
| **8LMG 130/09** | | 2910 | 1527 | 1383 | 230 | 93 |
| **8LMG 130/10** | | 3035 | 1652 | 1383 | 230 | 102 |
| **8LMG 130/11** | | 3360 | 1777 | 1583 | 270 | 110 |
| **8LMG 130/12** | | 3485 | 1902 | 1583 | 270 | 119 |
| **8LMG 130/13** | | 3760 | 2027 | 1733 | 300 | 128 |
| **8LMG 130/14** | | 3885 | 2152 | 1733 | 300 | 136 |

# 8LMG 130

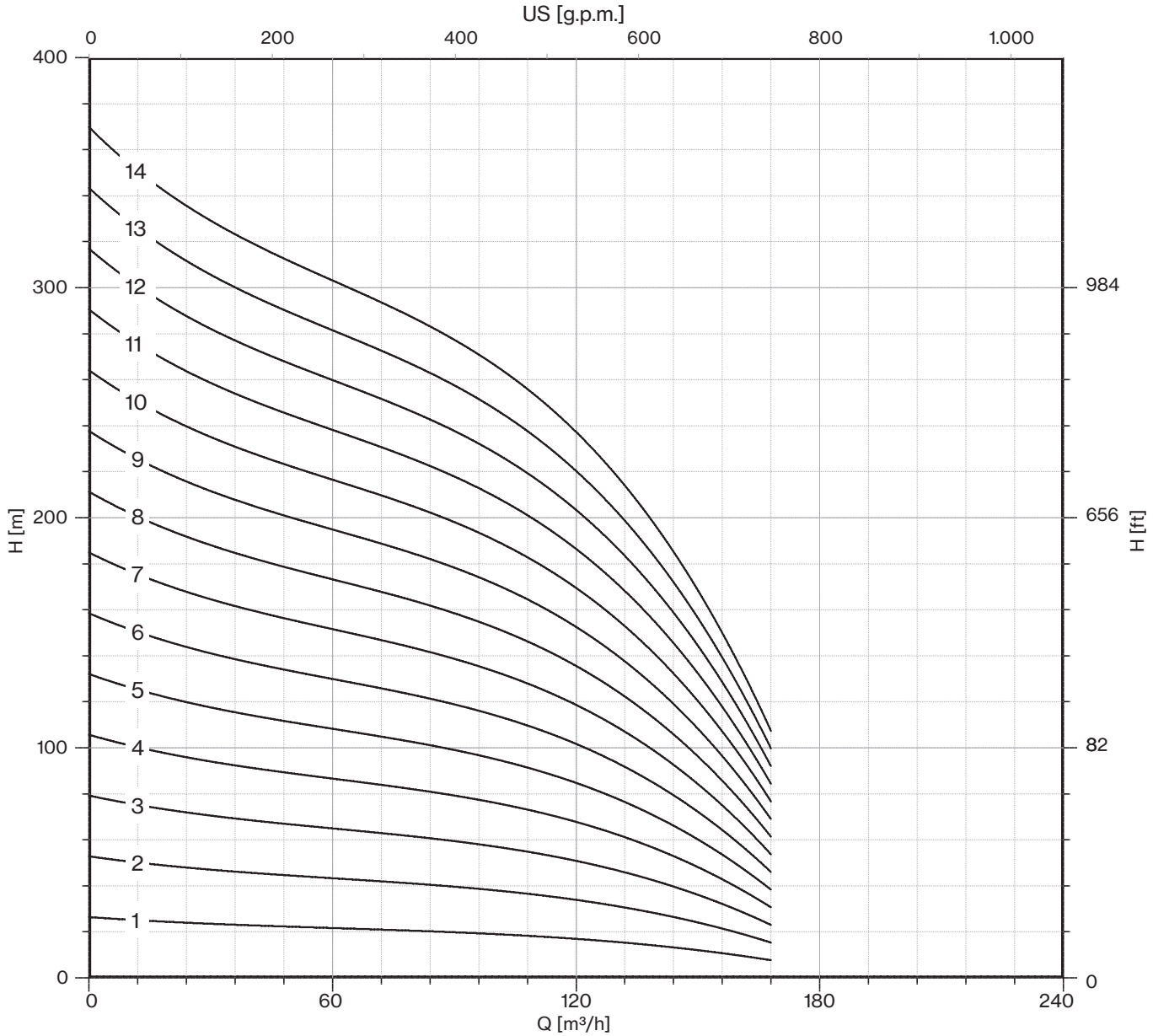


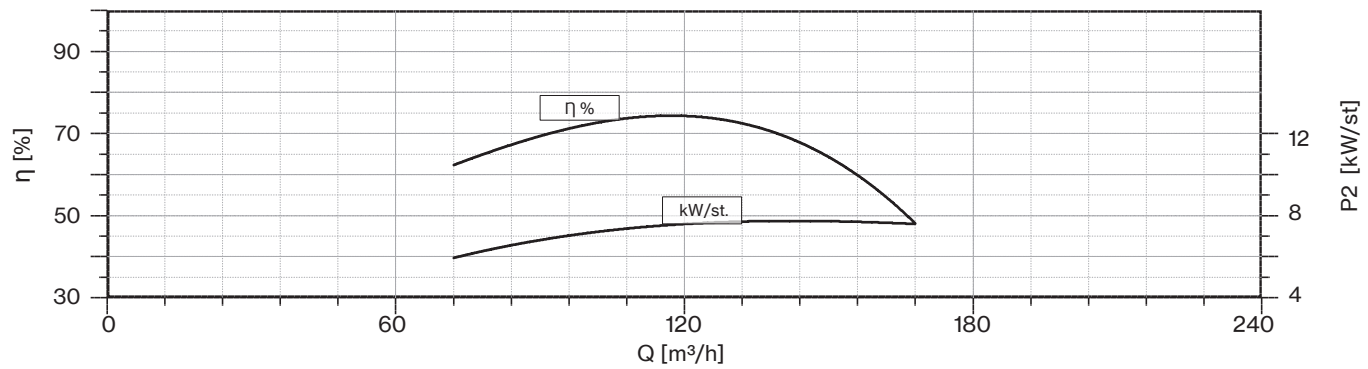




*Sand tolerance 50 g/m³*
*Tolerances according to UNI ISO 9906 grade 3B*

| 50 Hz - 2900 rpm | | | | | Q | | | | | | | | | |
|---|---|---|---|---|---|---|---|---|---|---|---|---|---|---|
| TYPE | SUITABLE MOTOR 3~ 400V | | | l/min | 0 | 1600 | 1800 | 2000 | 2200 | 2400 | 2600 | 2800 | 3000 | 3200 |
| | P2 | | CURRENT | l/sec | 0 | 26,67 | 30,00 | 33,33 | 36,67 | 40,00 | 43,33 | 46,67 | 50,00 | 53,33 |
| | HP | kW | A | m³/h | 0 | 96 | 108 | 120 | 132 | 144 | 156 | 168 | 180 | 192 |
| **8LMG 160/01** | 12,5 | 9,2 | 21 | H (m) | 24 | 19 | 18 | 17 | 16 | 16 | 15 | 13 | 12 | 10 |
| **8LMG 160/02** | 25 | 18,5 | 40 | | 49 | 38 | 36 | 35 | 33 | 31 | 30 | 27 | 24 | 20 |
| **8LMG 160/03** | 35 | 26 | 55 | | 73 | 57 | 54 | 52 | 49 | 47 | 45 | 40 | 36 | 30 |
| **8LMG 160/04** | 50 | 37 | 78 | | 97 | 76 | 72 | 69 | 66 | 63 | 59 | 54 | 48 | 40 |
| **8LMG 160/05** | 60 | 45 | 92 | | 121 | 95 | 90 | 86 | 82 | 79 | 74 | 67 | 60 | 50 |
| **8LMG 160/06** | 75 | 55 | 113,5 | | 146 | 114 | 108 | 104 | 99 | 94 | 89 | 81 | 72 | 60 |
| **8LMG 160/07** | 90 | 66 | 134,5 | | 170 | 133 | 126 | 121 | 115 | 110 | 104 | 94 | 84 | 70 |
| **8LMG 160/08** | 100 | 75 | 149,5 | | 194 | 152 | 144 | 138 | 131 | 126 | 119 | 107 | 96 | 80 |
| **8LMG 160/09** | 100 | 75 | 149,5 | | 219 | 171 | 162 | 156 | 148 | 141 | 134 | 121 | 108 | 90 |
| **8LMG 160/10** | 125 | 92 | 185 | | 243 | 190 | 180 | 173 | 164 | 157 | 149 | 134 | 120 | 100 |
| **8LMG 160/11** | 125 | 92 | 185 | | 267 | 209 | 198 | 190 | 181 | 173 | 163 | 148 | 132 | 110 |
| **8LMG 160/12** | 150 | 110 | 219 | | 291 | 228 | 216 | 207 | 197 | 189 | 178 | 161 | 144 | 120 |
| **8LMG 160/13** | 150 | 110 | 219 | | 316 | 247 | 234 | 225 | 214 | 204 | 193 | 175 | 156 | 130 |

| | |
|---|---|
| **Max Eff. %** | 74 |
| **Max kW / St.** | 8,6 |

| **NPSH (m)** | Q=25% | Q=50% | Q=75% | Q=100% |
|---|---|---|---|---|
| | 2,5 | 3 | 5 | 9 |

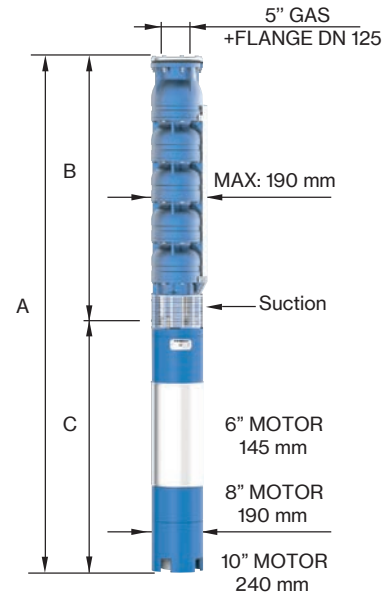


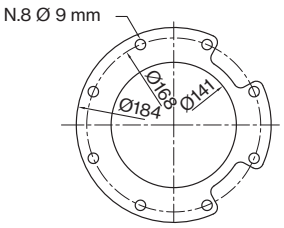


FOR COMMERCIAL TUBE
EXTERNAL DIAMETER: 139,7 mm

| TYPE 3~ | MOTOR BRACKET | DIMENSIONS (mm) | | | WEIGHT (kg) | |
|---|---|---|---|---|---|---|
| | | A | B | C | MOTOR | PUMP |
| **8LMG 160/01-6** | 6" NEMA | 1303 | 552 | 751 | 60 | 24 |
| **8LMG 160/02-6** | | 1693 | 702 | 991 | 83 | 33 |
| **8LMG 160/03-6** | | 2033 | 852 | 1181 | 100 | 42 |
| **8LMG 160/04-6** | | 2343 | 1002 | 1341 | 118 | 51 |
| **8LMG 160/05** | 8" NEMA | 2275 | 1152 | 1123 | 178 | 60 |
| **8LMG 160/06** | | 2535 | 1302 | 1233 | 200 | 69 |
| **8LMG 160/07** | | 2755 | 1452 | 1303 | 214 | 78 |
| **8LMG 160/08** | | 2985 | 1602 | 1383 | 230 | 87 |
| **8LMG 160/09** | | 3135 | 1752 | 1383 | 230 | 96 |
| **8LMG 160/10** | | 3485 | 1902 | 1583 | 270 | 105 |
| **8LMG 160/11** | | 3635 | 2052 | 1583 | 270 | 114 |
| **8LMG 160/12** | | 3935 | 2202 | 1733 | 300 | 123 |
| **8LMG 160/13** | | 4085 | 2352 | 1733 | 300 | 132 |

# 8LMG 160

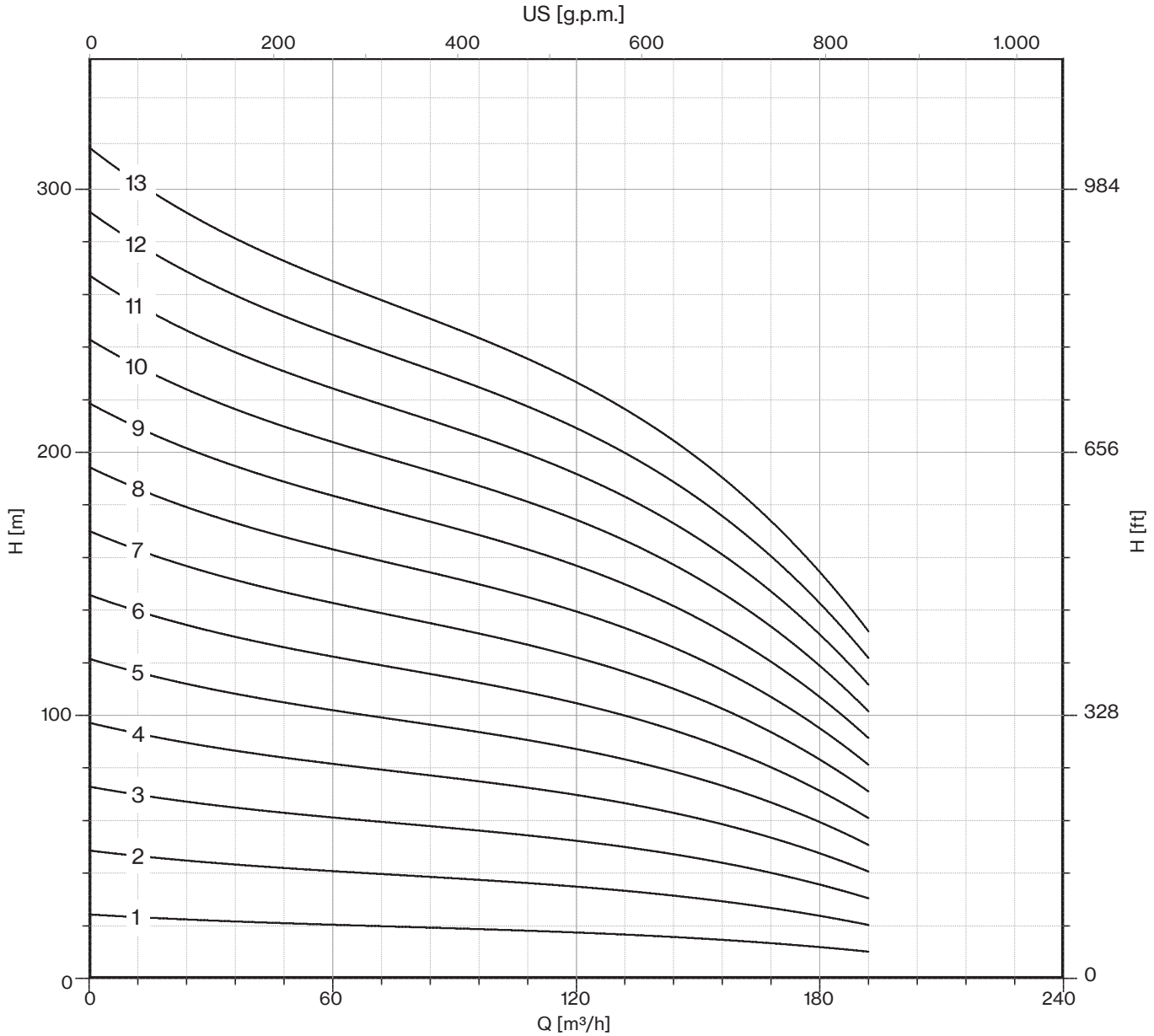


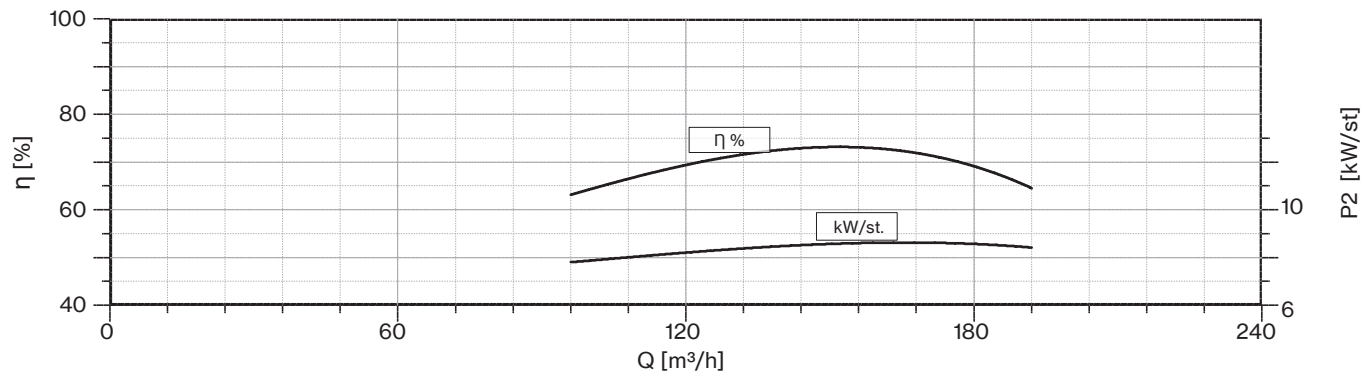




*Sand tolerance 50 g/m³*
*Tolerances according to UNI ISO 9906 grade 3B*

| 50 Hz - 2900 rpm | | | | | Q | | | | | | |
|---|---|---|---|---|---|---|---|---|---|---|---|
| TYPE | SUITABLE MOTOR 3~ 400V | | | l/min | 0 | 1800 | 2200 | 2600 | 3000 | 3400 | 3800 |
| | P2 | | CURRENT | l/sec | 0 | 30,00 | 36,67 | 43,33 | 50,00 | 56,67 | 63,33 |
| | HP | kW | A | m³/h | 0 | 108 | 132 | 156 | 180 | 204 | 228 |
| **10LMG 190/01DR20** | 20 | 15 | 32 | | 32 | 29 | 28 | 25 | 24 | 20 | 16 |
| **10LMG 190/01DR10** | 25 | 18,5 | 40 | | 37 | 33 | 31 | 29 | 27 | 22 | 18 |
| **10LMG 190/01** | 30 | 22 | 47,5 | | 42 | 37 | 35 | 32 | 30 | 25 | 20 |
| **10LMG 190/02DR20** | 40 | 30 | 62,5 | | 65 | 58 | 55 | 50 | 48 | 40 | 32 |
| **10LMG 190/02DR10** | 50 | 37 | 78 | | 73 | 66 | 62 | 57 | 54 | 45 | 36 |
| **10LMG 190/02** | 60 | 45 | 92 | | 83 | 74 | 70 | 64 | 60 | 50 | 40 |
| **10LMG 190/03DR20** | 75 | 55 | 113,5 | | 97 | 88 | 83 | 76 | 71 | 59 | 47 |
| **10LMG 190/03DR10** | 75 | 55 | 113,5 | | 110 | 99 | 94 | 86 | 80 | 67 | 53 |
| **10LMG 190/03** | 90 | 66 | 134,5 | | 125 | 111 | 105 | 96 | 90 | 75 | 60 |
| **10LMG 190/04DR20** | 90 | 66 | 134,5 | | 130 | 117 | 110 | 101 | 95 | 79 | 63 |
| **10LMG 190/04DR10** | 100 | 75 | 149,5 | | 146 | 132 | 125 | 114 | 107 | 90 | 71 |
| **10LMG 190/04** | 100 | 75 | 149,5 | H | 166 | 148 | 140 | 128 | 120 | 100 | 80 |
| **10LMG 190/05DR20** | 100 | 75 | 149,5 | (m) | 162 | 146 | 138 | 126 | 119 | 99 | 79 |
| **10LMG 190/05DR10** | 125 | 92 | 185 | | 183 | 165 | 156 | 143 | 134 | 112 | 89 |
| **10LMG 190/05** | 150 | 110 | 219 | | 208 | 185 | 175 | 160 | 150 | 125 | 100 |
| **10LMG 190/06DR20** | 125 | 92 | 185 | | 194 | 175 | 166 | 151 | 143 | 119 | 95 |
| **10LMG 190/06DR10** | 150 | 110 | 219 | | 220 | 198 | 187 | 172 | 161 | 134 | 107 |
| **10LMG 190/06** | 175 | 130 | 254,5 | | 250 | 222 | 210 | 192 | 180 | 150 | 120 |
| **10LMG 190/07DR20** | 150 | 110 | 219 | | 227 | 204 | 193 | 176 | 167 | 139 | 111 |
| **10LMG 190/07DR10** | 175 | 130 | 254,5 | | 256 | 231 | 218 | 200 | 188 | 157 | 125 |
| **10LMG 190/07** | 200 | 150 | 290 | | 291 | 259 | 245 | 224 | 210 | 175 | 140 |
| **10LMG 190/08DR20** | 175 | 130 | 254,5 | | 259 | 234 | 221 | 202 | 190 | 158 | 126 |
| **10LMG 190/08DR10** | 200 | 150 | 290 | | 293 | 264 | 250 | 229 | 214 | 179 | 142 |
| **10LMG 190/08** | 225 | 165 | 330 | | 333 | 296 | 280 | 256 | 240 | 200 | 160 |

| | |
|---|---|
| **Max Eff. % DR20 =** | 74 |
| **Max Eff. % DR10 =** | 75 |
| **Max Eff. %** | 75,5 |
| **Max kW / St. DR20 =** | 15,7 |
| **Max kW / St. DR10 =** | 17,5 |
| **Max kW / St.** | 19,4 |

| **NPSH (m)** | Q=25% | Q=50% | Q=75% | Q=100% |
|---|---|---|---|---|
| | 3,6 | 5,3 | 8,1 | 14 |

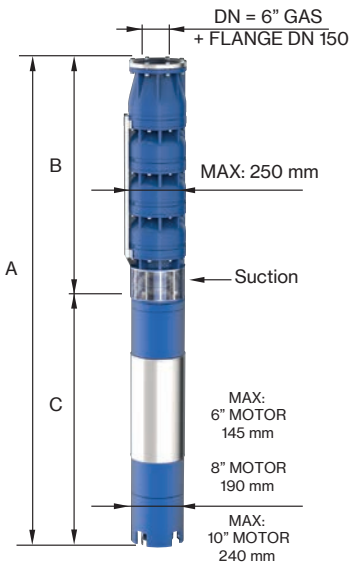


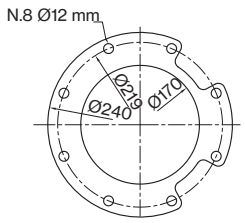


FOR COMMERCIAL TUBE
EXTERNAL DIAMETER: 168,3 mm

| TYPE 3~ | MOTOR BRACKET | DIMENSIONS (mm) | | | WEIGHT (kg) | |
|---|---|---|---|---|---|---|
| | | A | B | C | MOTOR | PUMP |
| **10LMG 190/01DR20-6** | | 1556 | 625 | 931 | 75 | 50 |
| **10LMG 190/01DR10-6** | | 1616 | 625 | 991 | 83 | 50 |
| **10LMG 190/01-6** | 6" NEMA | 1696 | 625 | 1071 | 92 | 50 |
| **10LMG 190/02DR20-6** | | 2056 | 805 | 1251 | 108 | 68 |
| **10LMG 190/02DR10-6** | | 2146 | 805 | 1341 | 118 | 68 |
| **10LMG 190/02-8** | | 1928 | 805 | 1123 | 178 | 68 |
| **10LMG 190/03DR20-8** | | 2218 | 985 | 1233 | 200 | 87 |
| **10LMG 190/03DR10-8** | | 2218 | 985 | 1233 | 200 | 87 |
| **10LMG 190/03-8** | | 2288 | 985 | 1303 | 214 | 87 |
| **10LMG 190/04DR20-8** | 8" NEMA | 2468 | 1165 | 1303 | 214 | 105 |
| **10LMG 190/04DR10-8** | | 2548 | 1165 | 1383 | 230 | 105 |
| **10LMG 190/04-8** | | 2548 | 1165 | 1383 | 230 | 105 |
| **10LMG 190/05DR20-8** | | 2728 | 1345 | 1383 | 230 | 124 |
| **10LMG 190/05DR10-8** | | 2928 | 1345 | 1583 | 270 | 124 |
| **10LMG 190/05-8** | | 3078 | 1345 | 1733 | 300 | 124 |
| **10LMG 190/06DR20** | | 3108 | 1525 | 1583 | 270 | 142 |
| **10LMG 190/06DR10** | | 3258 | 1525 | 1733 | 300 | 142 |
| **10LMG 190/06** | | 3159 | 1525 | 1634 | 385 | 142 |
| **10LMG 190/07DR20** | | 3438 | 1705 | 1733 | 300 | 161 |
| **10LMG 190/07DR10** | 10" | 3339 | 1705 | 1634 | 385 | 161 |
| **10LMG 190/07** | | 3439 | 1705 | 1734 | 415 | 161 |
| **10LMG 190/08DR20** | | 3519 | 1885 | 1634 | 385 | 179 |
| **10LMG 190/08DR10** | | 3619 | 1885 | 1734 | 415 | 179 |
| **10LMG 190/08** | | 3739 | 1885 | 1854 | 444 | 179 |

*"DR" : reduced-diameter impellers*

# 10LMG 190

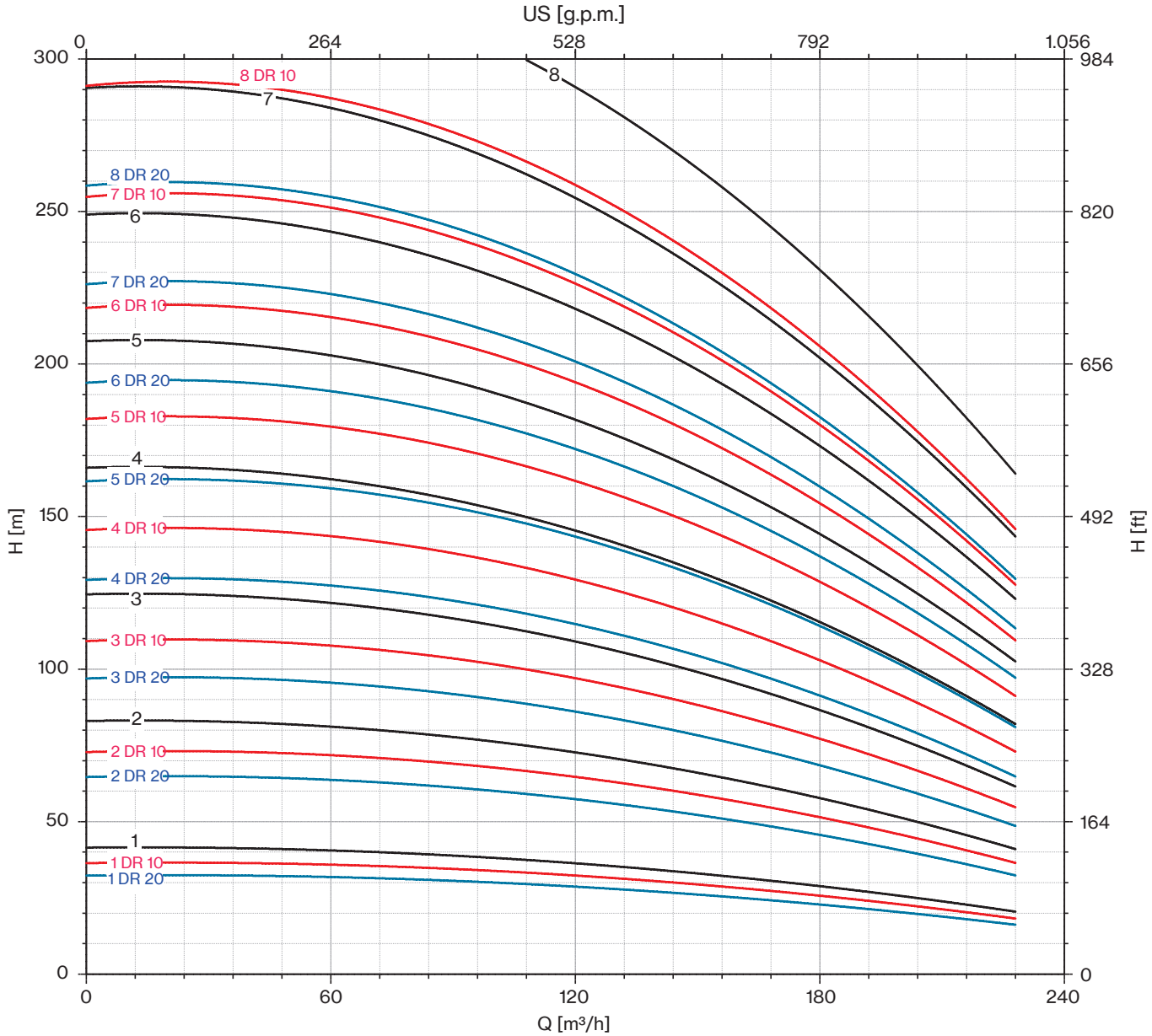


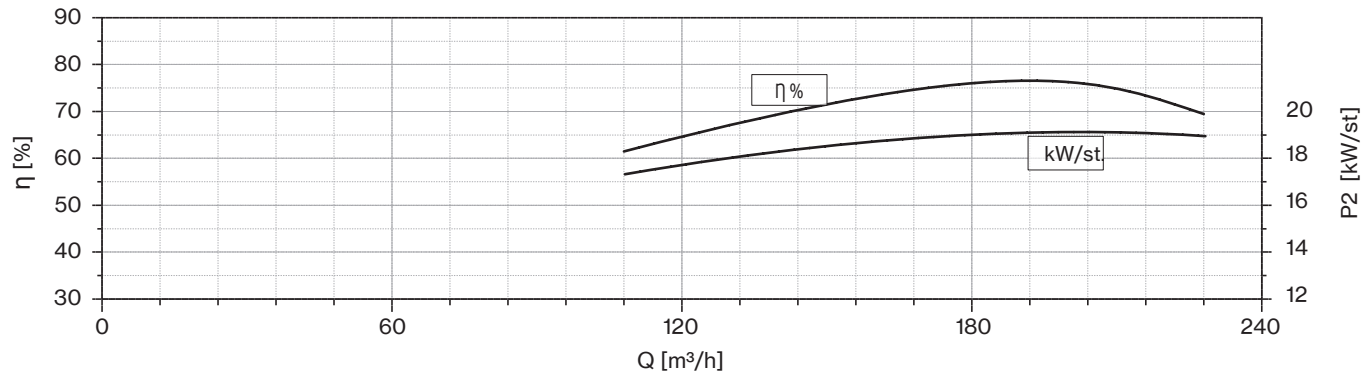




*Sand tolerance 50 g/m³*
*Tolerances according to UNI ISO 9906 grade 3B*

| 50 Hz - 2900 rpm | | | | | Q | | | | | | | |
|---|---|---|---|---|---|---|---|---|---|---|---|---|
| TYPE | SUITABLE MOTOR 3~ 400V | | | l/min | 0 | 2200 | 2600 | 3000 | 3400 | 3800 | 4200 | 4400 |
| | P2 | | CURRENT | l/sec | 0 | 36,67 | 43,33 | 50,00 | 56,67 | 63,33 | 70,00 | 73,33 |
| | HP | kW | A | m³/h | 0 | 132 | 156 | 180 | 204 | 228 | 252 | 264 |
| **10LMG 230/01DR20** | 25 | 18,5 | 40 | H (m) | 34 | 29 | 28 | 26 | 24 | 22 | 19 | 16 |
| **10LMG 230/01DR10** | 30 | 22 | 47,5 | | 38 | 33 | 31 | 29 | 27 | 25 | 21 | 17 |
| **10LMG 230/01** | 30 | 22 | 47,5 | | 43 | 37 | 35 | 33 | 30 | 28 | 24 | 22 |
| **10LMG 230/02DR20** | 50 | 37 | 78 | | 68 | 58 | 55 | 52 | 48 | 44 | 38 | 33 |
| **10LMG 230/02DR10** | 60 | 45 | 92 | | 77 | 66 | 62 | 59 | 54 | 50 | 43 | 35 |
| **10LMG 230/02** | 60 | 45 | 92 | | 86 | 74 | 70 | 66 | 60 | 56 | 48 | 44 |
| **10LMG 230/03DR20** | 75 | 55 | 113,5 | | 102 | 88 | 83 | 78 | 71 | 67 | 57 | 49 |
| **10LMG 230/03DR10** | 90 | 66 | 134,5 | | 115 | 99 | 94 | 88 | 80 | 75 | 64 | 52 |
| **10LMG 230/03** | 100 | 75 | 149,5 | | 129 | 111 | 105 | 99 | 90 | 84 | 72 | 66 |
| **10LMG 230/04DR20** | 100 | 75 | 149,5 | | 136 | 117 | 110 | 104 | 95 | 89 | 76 | 66 |
| **10LMG 230/04DR10** | 125 | 92 | 185 | | 154 | 132 | 125 | 118 | 107 | 100 | 86 | 70 |
| **10LMG 230/04** | 125 | 92 | 185 | | 172 | 148 | 140 | 132 | 120 | 112 | 96 | 88 |
| **10LMG 230/05DR20** | 125 | 92 | 185 | | 170 | 146 | 138 | 130 | 119 | 111 | 95 | 82 |
| **10LMG 230/05DR10** | 150 | 110 | 219 | | 192 | 165 | 156 | 147 | 134 | 125 | 107 | 87 |
| **10LMG 230/05** | 175 | 130 | 254,5 | | 215 | 185 | 175 | 165 | 150 | 140 | 120 | 110 |
| **10LMG 230/06DR20** | 150 | 110 | 219 | | 204 | 175 | 166 | 156 | 143 | 133 | 114 | 98 |
| **10LMG 230/06DR10** | 175 | 130 | 254,5 | | 230 | 198 | 187 | 176 | 161 | 150 | 128 | 104 |
| **10LMG 230/06** | 200 | 150 | 290 | | 258 | 222 | 210 | 198 | 180 | 168 | 144 | 132 |
| **10LMG 230/07DR20** | 175 | 130 | 254,5 | | 238 | 204 | 193 | 182 | 167 | 155 | 133 | 115 |
| **10LMG 230/07DR10** | 200 | 150 | 290 | | 269 | 231 | 218 | 206 | 188 | 175 | 150 | 122 |
| **10LMG 230/07** | 225 | 165 | 330 | | 301 | 259 | 245 | 231 | 210 | 196 | 168 | 154 |

| | |
|---|---|
| **Max Eff. % DR20 =** | 75,5 |
| **Max Eff. % DR10 =** | 76 |
| **Max Eff. %** | 76,5 |
| **Max kW / St. DR20 =** | 18,3 |
| **Max kW / St. DR10 =** | 20,5 |
| **Max kW / St.** | 23 |

| **NPSH (m)** | Q=25% | Q=50% | Q=75% | Q=100% |
|---|---|---|---|---|
| | 3,7 | 5,4 | 8,3 | 14,2 |

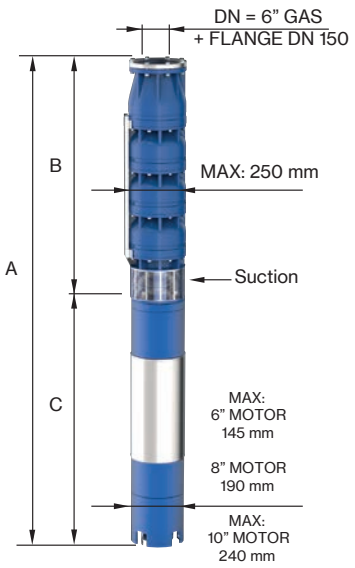


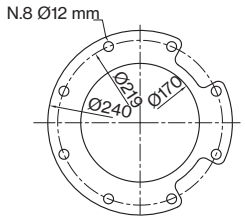


FOR COMMERCIAL TUBE
EXTERNAL DIAMETER: 168,3 mm

| TYPE 3~ | MOTOR BRACKET | DIMENSIONS (mm) | | | WEIGHT (kg) | |
|---|---|---|---|---|---|---|
| | | A | B | C | MOTOR | PUMP |
| **10LMG 230/01DR20-6** | 6" NEMA | 1616 | 625 | 991 | 83 | 50 |
| **10LMG 230/01DR10-6** | | 1696 | 625 | 1071 | 92 | 50 |
| **10LMG 230/01-6** | | 1696 | 625 | 1071 | 92 | 50 |
| **10LMG 230/02DR20-6** | | 2146 | 805 | 1341 | 118 | 68 |
| **10LMG 230/02DR10-8** | 8" NEMA | 1928 | 805 | 1123 | 178 | 68 |
| **10LMG 230/02-8** | | 1928 | 805 | 1123 | 178 | 68 |
| **10LMG 230/03DR20-8** | | 2218 | 985 | 1233 | 200 | 87 |
| **10LMG 230/03DR10-8** | | 2288 | 985 | 1303 | 214 | 87 |
| **10LMG 230/03-8** | | 2368 | 985 | 1383 | 230 | 87 |
| **10LMG 230/04DR20-8** | | 2548 | 1165 | 1383 | 230 | 105 |
| **10LMG 230/04DR10-8** | | 2748 | 1165 | 1583 | 270 | 105 |
| **10LMG 230/04-8** | | 2748 | 1165 | 1583 | 270 | 105 |
| **10LMG 230/05DR20-8** | | 2928 | 1345 | 1583 | 270 | 124 |
| **10LMG 230/05DR10-8** | | 3078 | 1345 | 1733 | 300 | 124 |
| **10LMG 230/05-8** | | 2979 | 1345 | 1634 | 385 | 124 |
| **10LMG 230/06DR20-8** | | 3258 | 1525 | 1733 | 300 | 142 |
| **10LMG 230/06DR10** | 10" | 3159 | 1525 | 1634 | 385 | 142 |
| **10LMG 230/06** | | 3259 | 1525 | 1734 | 415 | 142 |
| **10LMG 230/07DR20** | | 3339 | 1705 | 1634 | 385 | 161 |
| **10LMG 230/07DR10** | | 3439 | 1705 | 1734 | 415 | 161 |
| **10LMG 230/07** | | 3559 | 1705 | 1854 | 444 | 161 |

*"DR" : reduced-diameter impellers*

# 10LMG 230

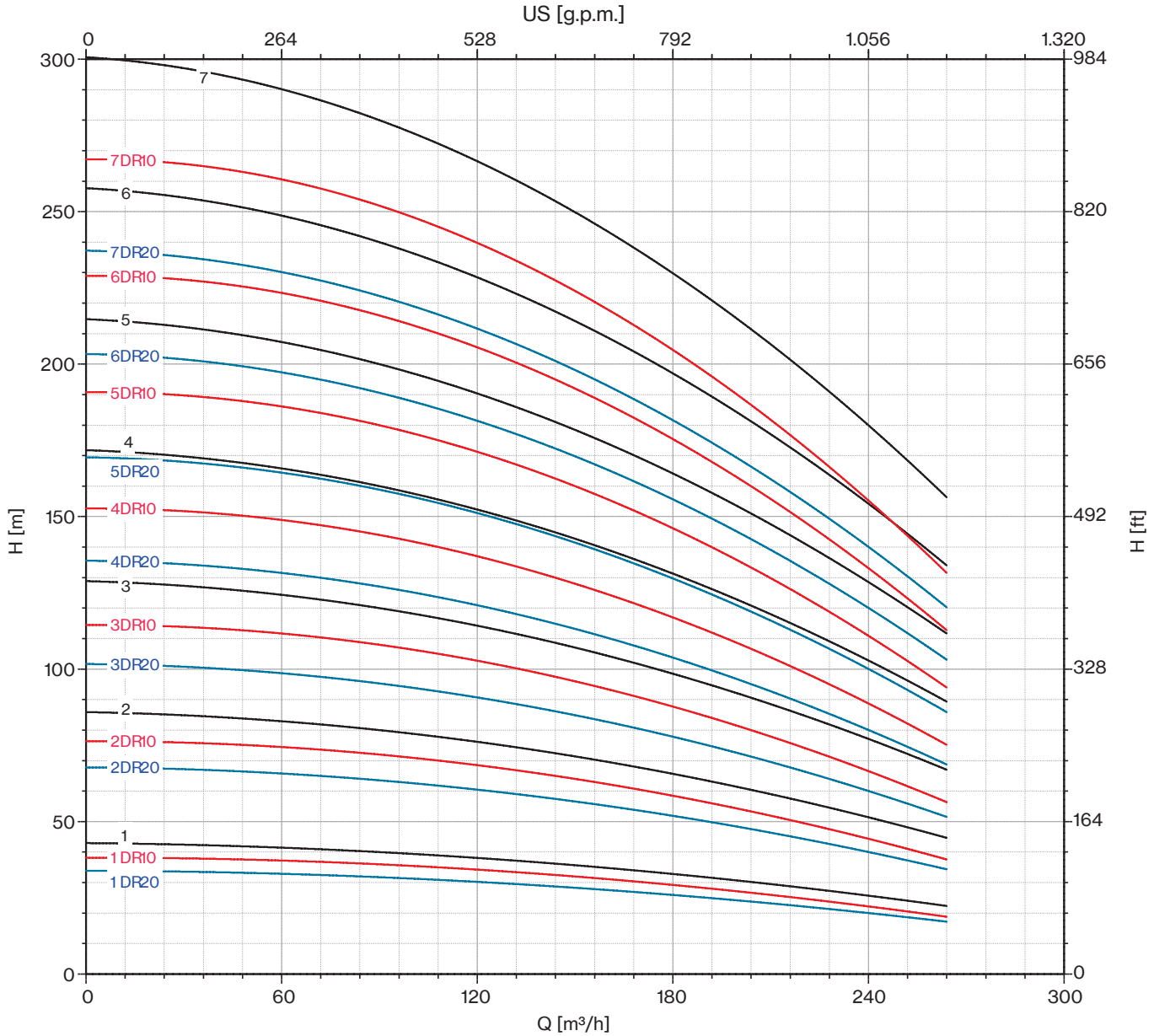


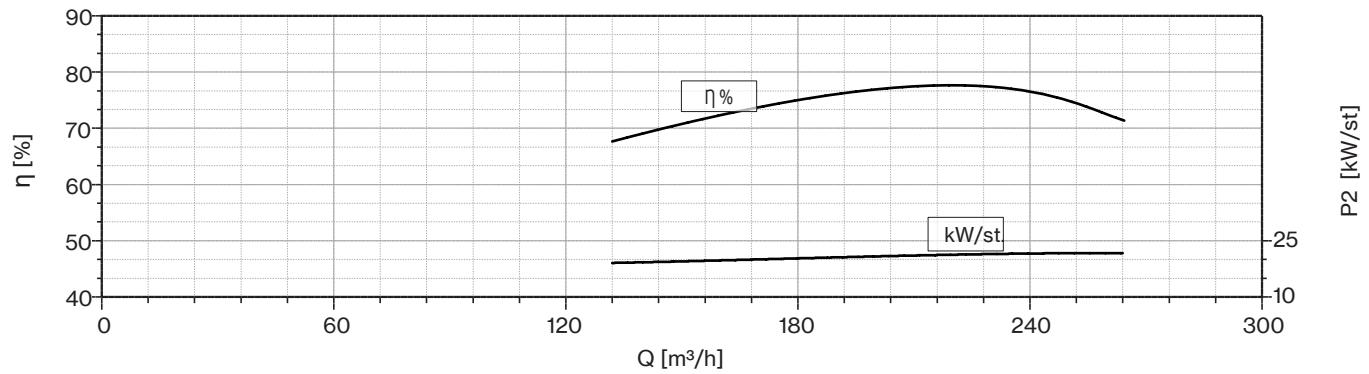




*Sand tolerance 50 g/m³*
*Tolerances according to UNI ISO 9906 grade 3B*

| 50 Hz - 2900 rpm | | | | | Q | | | | | | | | |
|---|---|---|---|---|---|---|---|---|---|---|---|---|---|
| TYPE | SUITABLE MOTOR 3~ 400V | | | l/min | 0 | 2400 | 2800 | 3200 | 3600 | 4000 | 4400 | 4800 | 5000 |
| | P2 | | CURRENT | l/sec | 0 | 40,00 | 46,67 | 53,33 | 60,00 | 66,67 | 73,33 | 80,00 | 83,33 |
| | HP | kW | A | m³/h | 0 | 144 | 168 | 192 | 216 | 240 | 264 | 288 | 300 |
| **10LMG 250/01DR20** | 30 | 22 | 47,5 | | 34 | 28 | 27 | 26 | 25 | 22 | 21 | 18 | 17 |
| **10LMG 250/01DR10** | 35 | 26 | 55 | | 38 | 32 | 30 | 29 | 28 | 25 | 23 | 20 | 20 |
| **10LMG 250/01** | 35 | 26 | 55 | | 43 | 36 | 34 | 33 | 31 | 28 | 26 | 23 | 22 |
| **10LMG 250/02DR20** | 60 | 45 | 92 | | 68 | 57 | 54 | 52 | 49 | 44 | 41 | 36 | 35 |
| **10LMG 250/02DR10** | 75 | 55 | 113,5 | | 77 | 64 | 61 | 59 | 55 | 50 | 46 | 41 | 39 |
| **10LMG 250/02** | 75 | 55 | 113,5 | | 86 | 72 | 68 | 66 | 62 | 56 | 52 | 46 | 44 |
| **10LMG 250/03DR20** | 90 | 66 | 134,5 | | 102 | 85 | 81 | 79 | 74 | 67 | 62 | 55 | 52 |
| **10LMG 250/03DR10** | 100 | 75 | 149,5 | | 115 | 96 | 91 | 88 | 83 | 75 | 70 | 61 | 59 |
| **10LMG 250/03** | 125 | 92 | 185 | | 129 | 108 | 102 | 99 | 93 | 84 | 78 | 69 | 66 |
| **10LMG 250/04DR20** | 125 | 92 | 185 | H | 136 | 114 | 108 | 105 | 98 | 89 | 82 | 73 | 70 |
| **10LMG 250/04DR10** | 125 | 92 | 185 | (m) | 154 | 128 | 122 | 118 | 110 | 100 | 93 | 82 | 78 |
| **10LMG 250/04** | 150 | 110 | 219 | | 172 | 144 | 136 | 132 | 124 | 112 | 104 | 92 | 88 |
| **10LMG 250/05DR20** | 150 | 110 | 219 | | 170 | 142 | 135 | 131 | 123 | 111 | 103 | 91 | 87 |
| **10LMG 250/05DR10** | 175 | 130 | 254,5 | | 192 | 160 | 152 | 147 | 138 | 125 | 116 | 102 | 98 |
| **10LMG 250/05** | 175 | 130 | 254,5 | | 215 | 180 | 170 | 165 | 155 | 140 | 130 | 115 | 110 |
| **10LMG 250/06DR20** | 175 | 130 | 254,5 | | 204 | 170 | 162 | 157 | 148 | 133 | 124 | 109 | 104 |
| **10LMG 250/06DR10** | 200 | 150 | 290 | | 230 | 192 | 182 | 176 | 166 | 150 | 139 | 122 | 118 |
| **10LMG 250/06** | 225 | 165 | 330 | | 258 | 216 | 204 | 198 | 186 | 168 | 156 | 138 | 132 |
| **10LMG 250/07DR20** | 225 | 165 | 330 | | 238 | 199 | 189 | 183 | 172 | 155 | 144 | 127 | 122 |
| **10LMG 250/07DR10** | 225 | 165 | 330 | | 269 | 224 | 213 | 206 | 193 | 175 | 162 | 143 | 137 |

| | |
|---|---|
| **Max Eff. % DR20 =** | 75,5 |
| **Max Eff. % DR10 =** | 76 |
| **Max Eff. %** | 76,5 |
| **Max kW / St. DR20 =** | 21,9 |
| **Max kW / St. DR10 =** | 23,5 |
| **Max kW / St.** | 26,3 |

| **NPSH (m)** | Q=25% | Q=50% | Q=75% | Q=100% |
|---|---|---|---|---|
| | 3,9 | 5,5 | 8,5 | 14,4 |

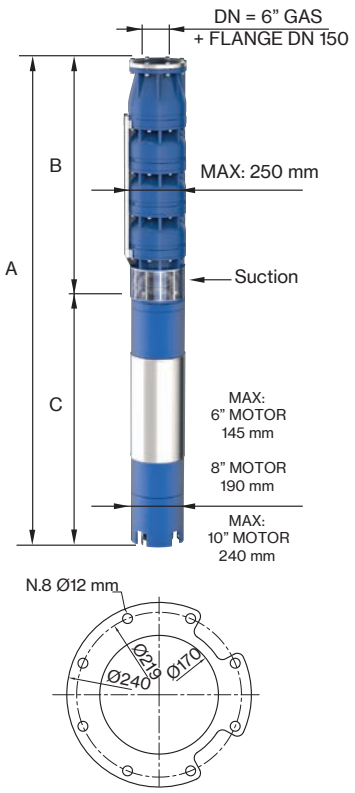


FOR COMMERCIAL TUBE
EXTERNAL DIAMETER: 168,3 mm

| TYPE 3~ | MOTOR BRACKET | DIMENSIONS (mm) | | | WEIGHT (kg) | |
|---|---|---|---|---|---|---|
| | | A | B | C | MOTOR | PUMP |
| **10LMG 250/01DR20-6** | | 1696 | 625 | 1071 | 92 | 50 |
| **10LMG 250/01DR10-6** | 6" NEMA | 1806 | 625 | 1181 | 100 | 50 |
| **10LMG 250/01-6** | | 1806 | 625 | 1181 | 100 | 50 |
| **10LMG 250/02DR20-8** | | 1928 | 805 | 1123 | 178 | 68 |
| **10LMG 250/02DR10-8** | | 2038 | 805 | 1233 | 200 | 68 |
| **10LMG 250/02-8** | | 2038 | 805 | 1233 | 200 | 68 |
| **10LMG 250/03DR20-8** | | 2288 | 985 | 1303 | 214 | 87 |
| **10LMG 250/03DR10-8** | 8" NEMA | 2368 | 985 | 1383 | 230 | 87 |
| **10LMG 250/03-8** | | 2568 | 985 | 1583 | 270 | 87 |
| **10LMG 250/04DR20-8** | | 2748 | 1165 | 1583 | 270 | 105 |
| **10LMG 250/04DR10-8** | | 2748 | 1165 | 1583 | 270 | 105 |
| **10LMG 250/04-8** | | 2898 | 1165 | 1733 | 300 | 105 |
| **10LMG 250/05DR20** | | 3078 | 1345 | 1733 | 300 | 124 |
| **10LMG 250/05DR10** | | 2979 | 1345 | 1634 | 385 | 124 |
| **10LMG 250/05** | | 2979 | 1345 | 1634 | 385 | 124 |
| **10LMG 250/06DR20** | 10" | 3159 | 1525 | 1634 | 385 | 142 |
| **10LMG 250/06DR10** | | 3259 | 1525 | 1734 | 415 | 142 |
| **10LMG 250/06** | | 3379 | 1525 | 1854 | 444 | 142 |
| **10LMG 250/07DR20** | | 3559 | 1705 | 1854 | 444 | 161 |
| **10LMG 250/07DR10** | | 3559 | 1705 | 1854 | 444 | 161 |

*"DR" : reduced-diameter impellers*

# 10LMG 250

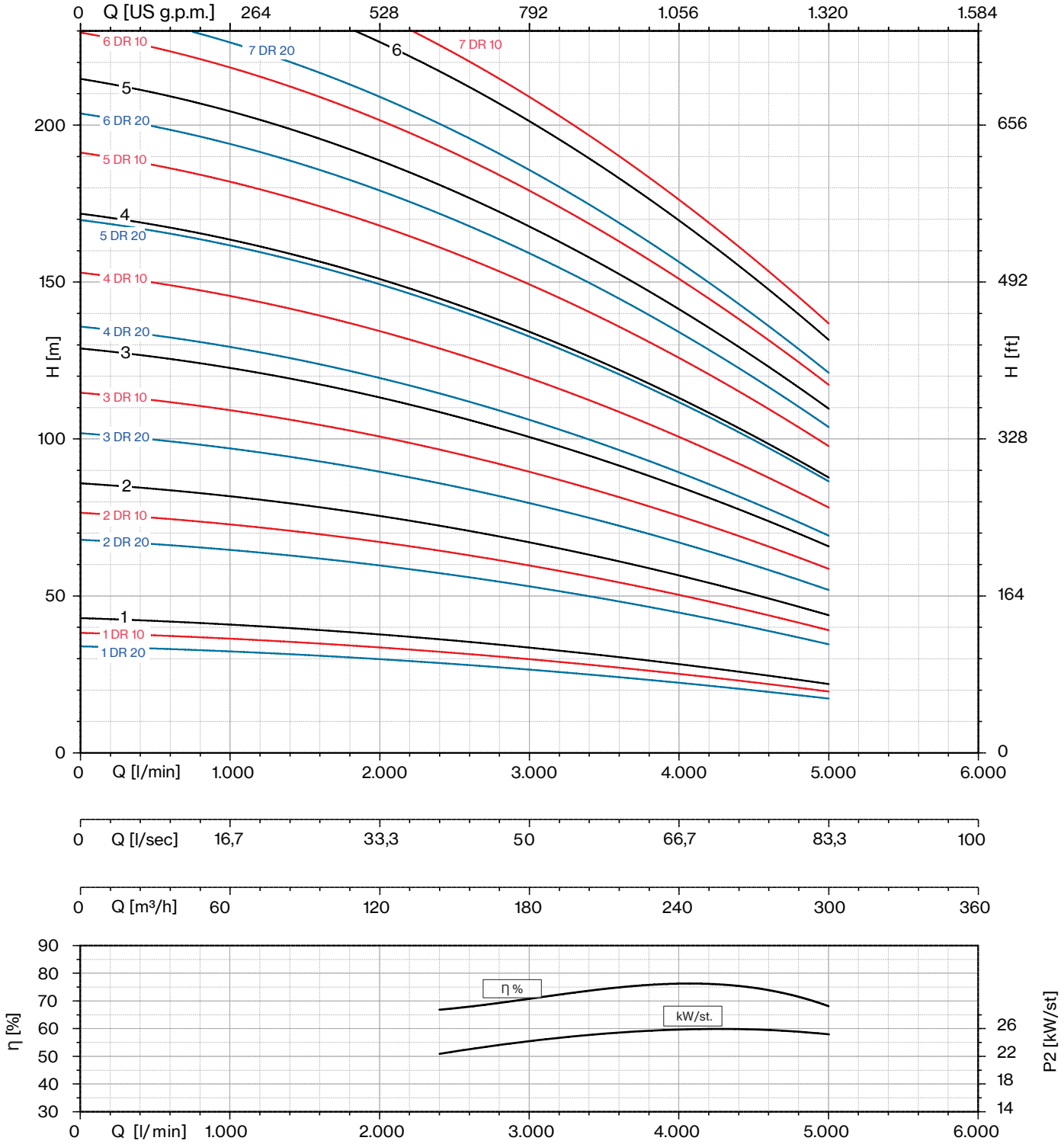




*Sand tolerance 50 g/m³*
*Tolerances according to UNI ISO 9906 grade 3B*

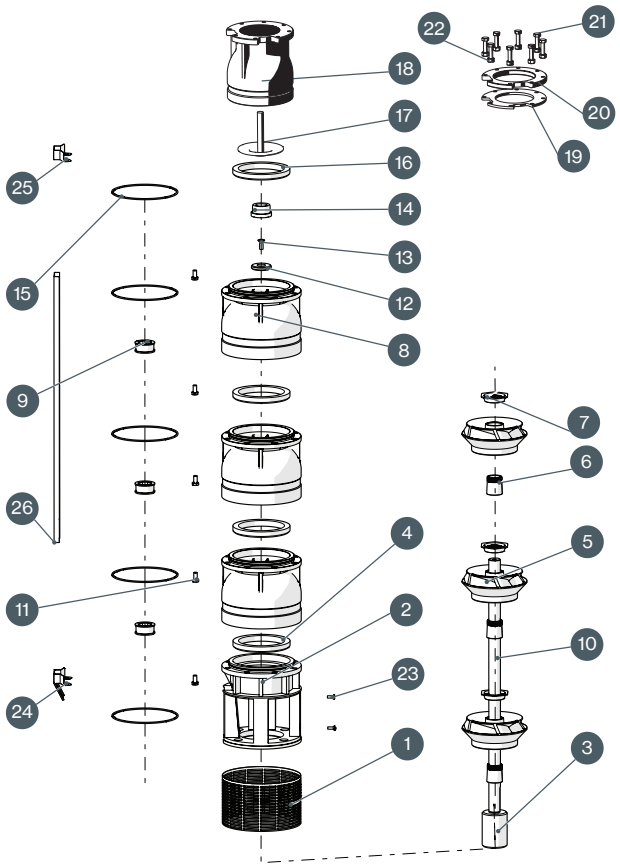


| N. CODE | DESCRIPTION | MATERIAL |
|---|---|---|
| 1 | **SUCTION STRAINER** | AISI 304 |
| 2 | **SUCTION CAGE** | CAST IRON |
| 3 | **JOINT** | AISI 304 |
| 4 | **USURY RING** | NBR |
| 5 | **IMPELLER** | CAST IRON |
| 6 | **CONE** | AISI 304 |
| 7 | **HEXAGONAL RING** | AISI 304 |
| 8 | **DIFFUSEUR** | AISI 304 |
| 9 | **BEARING BUSH** | NBR |
| 10 | **PUMP SHAFT** | AISI 304 |
| 11 | **N.8 SCREW FOR DIFFUSEUR** | AISI 304 |
| 12 | **RING** | AISI 304 |
| 13 | **SCREW FOR DISK** | AISI 304 |
| 14 | **COUNTERTHRUST** | PTFE + 25% CARBON |
| 15 | **O-RING** | NBR |
| 16 | **GASKET VALVE** | NBR |
| 17 | **CAP VALVE** | AISI 304 |
| 18 | **BODY VALVE** | CAST IRON |
| 19 | **SEAL COUNTERFLANGE** | NBR |
| 20 | **COUNTERFLANGE** | IRON |
| 21 | **N.8 SCREW FOR COUNTERFLANGE** | AISI 304 |
| 22 | **N.8 NUT FOR COUNTERFLANGE** | AISI 304 |
| 23 | **N.2 SCREW FOR SUCTION STRAINER** | AISI 304 |
| 24 | **LOWER FLANGE** | AISI 304 |
| 25 | **UPPER FLANGE** | AISI 304 |
| 26 | **COVER CABLE** | AISI 304 |

# 6LRH & 6LM line

## Submersible Well Pumps

6LRH line

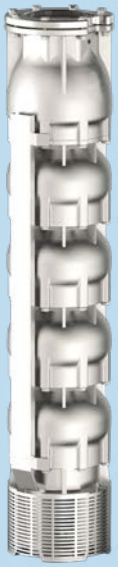

6LM line

Submersible Multistage Centrifugal Pumps for 6” Wells.
The 6LRH line is a radial type execution, while the 6LM one is a semi-axial type. These pumps feature a check valve integrated into the delivery outlet. The pump motor bracket is designed in compliance with NEMA standards. All components are constructed from stainless steel using lost wax microfusion technology.
The standard material is AISI 304 stainless steel. Alternatively, the following materials are available upon request: AISI 316 stainless steel and Duplex steel (EN 1.4462). The bushing bearings and wear rings are made from sand abrasion-resistant rubber, while the reverse-thrust ring is crafted from PTFE/Graphite. These pumps are ideal for a variety of applications, including civil and agricultural use.

**General operating data:**

- Capacity up to 90 m³/h
- Pressure up to 540 m
- Hydraulic efficiency 6”, up to 78,5%
- Powers up to 37 kW
- Rotation speed 2.900 rpm
- Maximum depth: 350 m
- Maximum quantity of sand: 100 gr/m³
- Drinking water compatibility according to DM174
- MEI ≥ 0,4 (EU directive No.547/2012)
- Performance tolerance: ISO9906-3B

| Construction features | |
|---|---|
| **Suction and delivery outlet** | stainless steel AISI 304 (LRHS-LMS)<br>stainless steel AISI 316 (LRHX-LMX)<br>Duplex EN 1.4462 (LRHD-LMD) |
| **Valve** | stainless steel AISI 304 (LRHS-LMS)<br>stainless steel AISI 316 (LRHX-LMX)<br>Duplex EN 1.4462 (LRHD-LMD) |
| **Impellers and diffusers** | stainless steel AISI 304 (LRHS-LMS)<br>stainless steel AISI 316 (LRHX-LMX)<br>Duplex EN 1.4462 (LRHD-LMD) |
| **Upper bushings** | NBR rubber |
| **Shaft pump side** | stainless steel AISI 304 (LRHS-LMS)<br>stainless steel AISI 316 (LRHX-LMX)<br>Duplex EN 1.4462 (LRHD-LMD) |
| **Quantity of sand in the water** | max 100 g/m³ |

| Motor | |
|---|---|
| **Asynchronous 2 pole** | rewindable water cooled |
| **Insulation class** | Y (max 30 °C) - PPC winding type<br>F (max 50 °C) - PE2+PA or LPE winding type |
| **Protection degree** | IP68 |
| **Liquid temperature** | max 30 °C (max 50 °C on request) |
| **Depth of immersion** | max 350 m |

| 50 Hz - 2900 rpm | | | | | Q | | | | | | | |
|---|---|---|---|---|---|---|---|---|---|---|---|---|
| TYPE | SUITABLE MOTOR 3~ 400V | | | l/min | 0 | 100 | 150 | 200 | 250 | 300 | 350 | 400 |
| | P2 | | CURRENT | l/sec | 0,0 | 1,7 | 2,5 | 3,3 | 4,2 | 5,0 | 5,8 | 6,7 |
| | HP | kW | A | m³/h | 0 | 6 | 9 | 12 | 15 | 18 | 21 | 24 |
| **6LRH 14/01** | 1 | 0,75 | 2,6 | H (m) | 15 | 14 | 13 | 13 | 12 | 11 | 9 | 7 |
| **6LRH 14/02** | 2 | 1,5 | 4,6 | | 29 | 28 | 26 | 25 | 23 | 21 | 18 | 14 |
| **6LRH 14/03** | 3 | 2,2 | 6,4 | | 44 | 41 | 40 | 38 | 35 | 32 | 26 | 20 |
| **6LRH 14/04** | 4 | 3 | 8,3 | | 58 | 55 | 53 | 50 | 46 | 42 | 35 | 27 |
| **6LRH 14/05** | 5,5 | 4 | 9,6 | | 73 | 69 | 66 | 63 | 58 | 53 | 44 | 34 |
| **6LRH 14/06** | 7,5 | 5,5 | 13,6 | | 88 | 83 | 79 | 75 | 70 | 63 | 53 | 41 |
| **6LRH 14/07** | 7,5 | 5,5 | 13,6 | | 102 | 97 | 92 | 88 | 81 | 74 | 62 | 48 |
| **6LRH 14/08** | 7,5 | 5,5 | 13,6 | | 117 | 110 | 106 | 100 | 93 | 84 | 70 | 54 |
| **6LRH 14/09** | 10 | 7,5 | 16,3 | | 131 | 124 | 119 | 113 | 104 | 95 | 79 | 61 |
| **6LRH 14/10** | 10 | 7,5 | 16,3 | | 146 | 138 | 132 | 125 | 116 | 105 | 88 | 68 |
| **6LRH 14/11** | 12,5 | 9,2 | 19,9 | | 161 | 152 | 145 | 138 | 128 | 116 | 97 | 75 |
| **6LRH 14/12** | 12,5 | 9,2 | 19,9 | | 175 | 166 | 158 | 150 | 139 | 126 | 106 | 82 |
| **6LRH 14/13** | 12,5 | 9,2 | 19,9 | | 190 | 179 | 172 | 163 | 151 | 137 | 114 | 88 |
| **6LRH 14/14** | 15 | 11 | 23,4 | | 204 | 193 | 185 | 175 | 162 | 147 | 123 | 95 |
| **6LRH 14/15** | 15 | 11 | 23,4 | | 219 | 207 | 198 | 188 | 174 | 158 | 132 | 102 |
| **6LRH 14/16** | 15 | 11 | 23,4 | | 234 | 221 | 211 | 200 | 186 | 168 | 141 | 109 |
| **6LRH 14/17** | 17,5 | 13 | 27,3 | | 248 | 235 | 224 | 213 | 197 | 179 | 150 | 116 |
| **6LRH 14/18** | 17,5 | 13 | 27,3 | | 263 | 248 | 238 | 225 | 209 | 189 | 158 | 122 |

| | |
|---|---|
| **Max Eff. %** | 74 |
| **Max kW / St.** | 0,71 |

| **NPSH (m)** | Q=25% | Q=50% | Q=75% | Q=100% |
|---|---|---|---|---|
| | 3 | 3 | 4 | 6 |

| TYPE 3~ | MOTOR BRACKET | DIMENSIONS (mm) | | | WEIGHT (kg) | |
|---|---|---|---|---|---|---|
| | | A | B | C | MOTOR | PUMP |
| **6LRH 14/01-4** | 4" NEMA | 627 | 302 | 325 | 7,6 | 11 |
| **6LRH 14/02-4** | | 754 | 369 | 385 | 10,4 | 15 |
| **6LRH 14/03-4** | | 856 | 436 | 420 | 12 | 20 |
| **6LRH 14/04-4** | | 921 | 503 | 418 | 12,8 | 24 |
| **6LRH 14/05-4** | | 1038 | 570 | 468 | 15,3 | 28 |
| **6LRH 14/06-4** | | 1175 | 637 | 538 | 18,6 | 32 |
| **6LRH 14/07-4** | | 1242 | 704 | 538 | 18,6 | 36 |
| **6LRH 14/08-4** | | 1309 | 771 | 538 | 18,6 | 40 |
| **6LRH 14/09** | 6" NEMA | 1539 | 838 | 701 | 55 | 44 |
| **6LRH 14/10** | | 1606 | 905 | 701 | 55 | 49 |
| **6LRH 14/11** | | 1723 | 972 | 751 | 60 | 53 |
| **6LRH 14/12** | | 1790 | 1039 | 751 | 60 | 57 |
| **6LRH 14/13** | | 1857 | 1106 | 751 | 60 | 61 |
| **6LRH 14/14** | | 1984 | 1173 | 811 | 65 | 65 |
| **6LRH 14/15** | | 2051 | 1240 | 811 | 65 | 69 |
| **6LRH 14/16** | | 2118 | 1307 | 811 | 65 | 74 |
| **6LRH 14/17** | | 2215 | 1374 | 841 | 70 | 78 |
| **6LRH 14/18** | | 2282 | 1441 | 841 | 70 | 82 |

# 6LRH 14

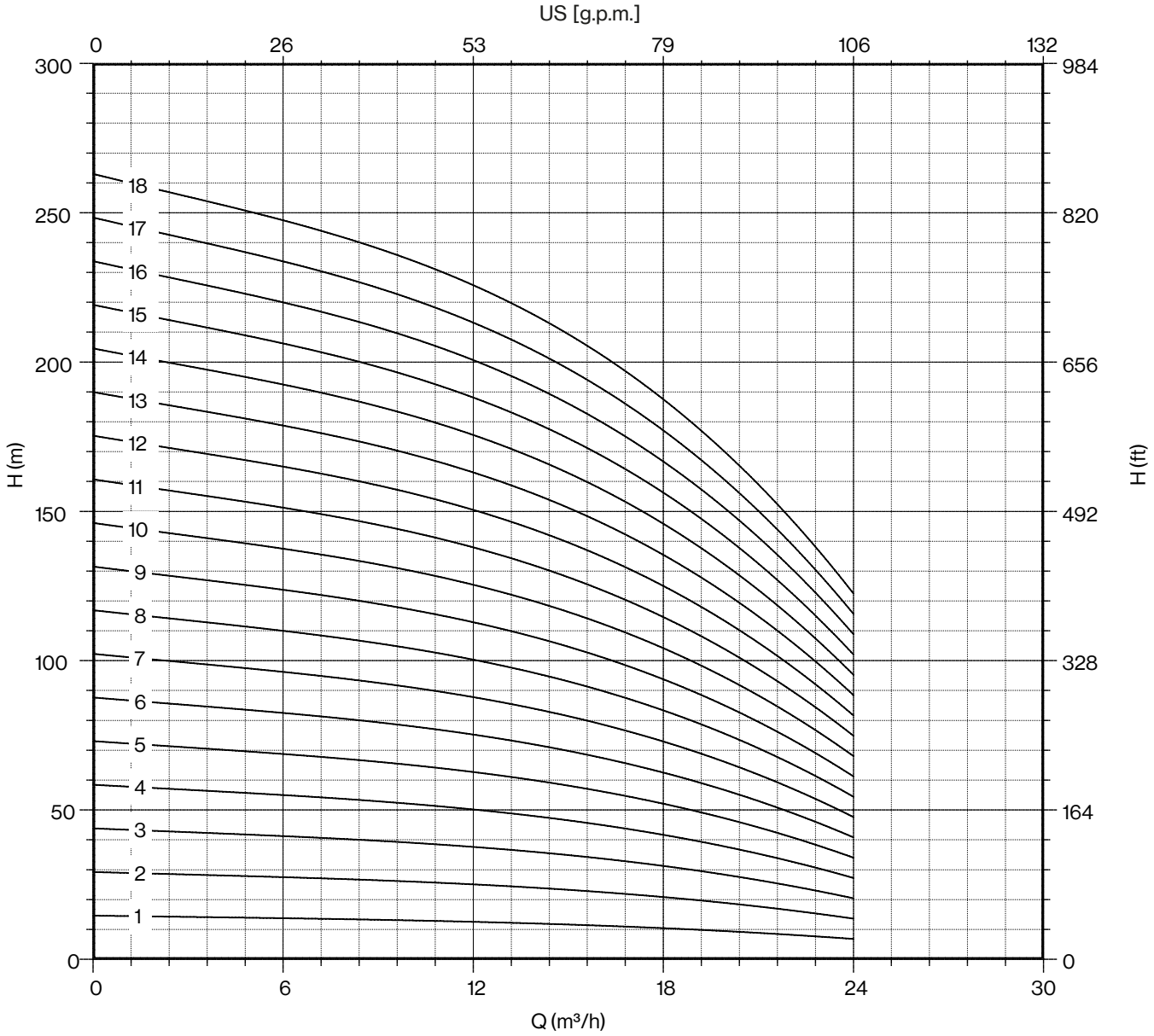


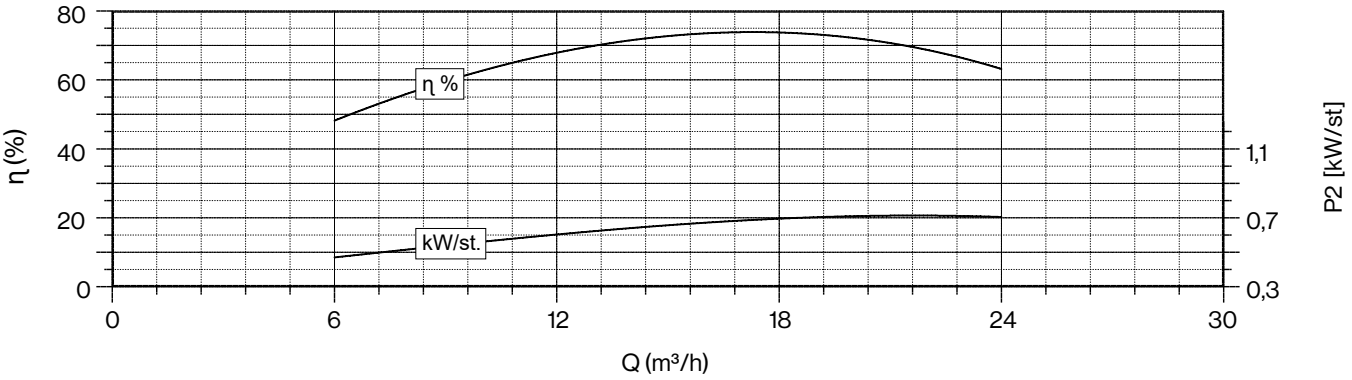




*Drinking water compatibility according DM 174*
*MEI ≥ 0,4 (regulation EU N. 547/2012)*
*Models with less than 3 stages reduce the % eff. of 5%*
*Hydraulic performance according to ISO 9906 grade 3B*

| 50 Hz - 2900 rpm | | | | | Q | | | | | | | |
|---|---|---|---|---|---|---|---|---|---|---|---|---|
| TYPE | SUITABLE MOTOR 3~ 400V | | | l/min | 0 | 100 | 150 | 200 | 250 | 300 | 350 | 400 |
| | P2 | | CURRENT | l/sec | 0,0 | 1,7 | 2,5 | 3,3 | 4,2 | 5,0 | 5,8 | 6,7 |
| | HP | kW | A | m³/h | 0 | 6 | 9 | 12 | 15 | 18 | 21 | 24 |
| **6LRH 14/19** | 20 | 15 | 31,5 | H (m) | 277 | 262 | 251 | 238 | 220 | 200 | 167 | 129 |
| **6LRH 14/20** | 20 | 15 | 31,5 | | 292 | 276 | 264 | 250 | 232 | 210 | 176 | 136 |
| **6LRH 14/21** | 20 | 15 | 31,5 | | 307 | 290 | 277 | 263 | 244 | 221 | 185 | 143 |
| **6LRH 14/22** | 25 | 18,5 | 38,3 | | 321 | 304 | 290 | 275 | 255 | 231 | 194 | 150 |
| **6LRH 14/23** | 25 | 18,5 | 38,3 | | 336 | 317 | 304 | 288 | 267 | 242 | 202 | 156 |
| **6LRH 14/24** | 25 | 18,5 | 38,3 | | 350 | 331 | 317 | 300 | 278 | 252 | 211 | 163 |
| **6LRH 14/25** | 25 | 18,5 | 38,3 | | 365 | 345 | 330 | 313 | 290 | 263 | 220 | 170 |
| **6LRH 14/26** | 25 | 18,5 | 38,3 | | 380 | 359 | 343 | 325 | 302 | 273 | 229 | 177 |
| **6LRH 14/27** | 30 | 22 | 45,1 | | 394 | 373 | 356 | 338 | 313 | 284 | 238 | 184 |
| **6LRH 14/28** | 30 | 22 | 45,1 | | 409 | 386 | 370 | 350 | 325 | 294 | 246 | 190 |
| **6LRH 14/29** | 30 | 22 | 45,1 | | 423 | 400 | 383 | 363 | 336 | 305 | 255 | 197 |
| **6LRH 14/30** | 30 | 22 | 45,1 | | 438 | 414 | 396 | 375 | 348 | 315 | 264 | 204 |
| **6LRH 14/31** | 30 | 22 | 45,1 | | 453 | 428 | 409 | 388 | 360 | 326 | 273 | 211 |
| **6LRH 14/32** | 35 | 26 | 52,9 | | 467 | 442 | 422 | 400 | 371 | 336 | 282 | 218 |
| **6LRH 14/33** | 35 | 26 | 52,9 | | 482 | 455 | 436 | 413 | 383 | 347 | 290 | 224 |
| **6LRH 14/34** | 35 | 26 | 52,9 | | 496 | 469 | 449 | 425 | 394 | 357 | 299 | 231 |
| **6LRH 14/35** | 35 | 26 | 52,9 | | 511 | 483 | 462 | 438 | 406 | 368 | 308 | 238 |
| **6LRH 14/36** | 35 | 26 | 52,9 | | 526 | 497 | 475 | 450 | 418 | 378 | 317 | 245 |
| **6LRH 14/37** | 35 | 26 | 52,9 | | 540 | 511 | 488 | 463 | 429 | 389 | 326 | 252 |

| | |
|---|---|
| **Max Eff. %** | 74 |
| **Max kW / St.** | 0,71 |

| **NPSH (m)** | Q=25% | Q=50% | Q=75% | Q=100% |
|---|---|---|---|---|
| | 3 | 3 | 4 | 6 |

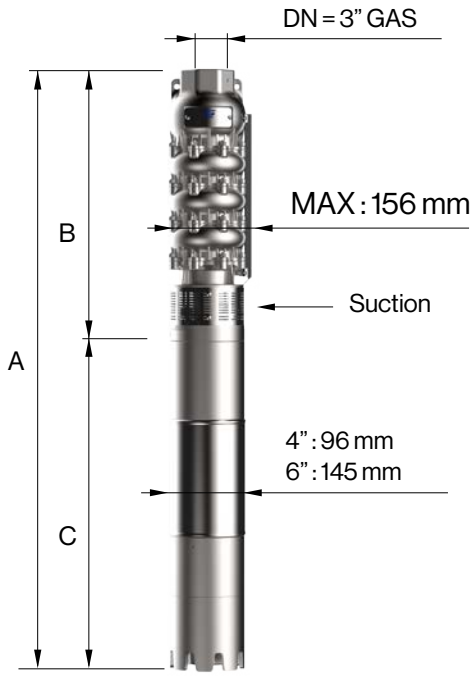


| TYPE 3~ | MOTOR BRACKET | DIMENSIONS (mm) | | | WEIGHT (kg) | |
|---|---|---|---|---|---|---|
| | | A | B | C | MOTOR | PUMP |
| **6LRH 14/19** | 6" NEMA | 2439 | 1508 | 931 | 75 | 86 |
| **6LRH 14/20** | | 2506 | 1575 | 931 | 75 | 90 |
| **6LRH 14/21** | | 2573 | 1642 | 931 | 75 | 94 |
| **6LRH 14/22** | | 2700 | 1709 | 991 | 83 | 98 |
| **6LRH 14/23** | | 2767 | 1776 | 991 | 83 | 103 |
| **6LRH 14/24** | | 2834 | 1843 | 991 | 83 | 107 |
| **6LRH 14/25** | | 2901 | 1910 | 991 | 83 | 111 |
| **6LRH 14/26** | | 2968 | 1977 | 991 | 83 | 115 |
| **6LRH 14/27** | | 3115 | 2044 | 1071 | 92 | 119 |
| **6LRH 14/28** | | 3182 | 2111 | 1071 | 92 | 123 |
| **6LRH 14/29** | | 3249 | 2178 | 1071 | 92 | 127 |
| **6LRH 14/30** | | 3316 | 2245 | 1071 | 92 | 132 |
| **6LRH 14/31** | | 3383 | 2312 | 1071 | 92 | 136 |
| **6LRH 14/32** | | 3560 | 2379 | 1181 | 100 | 140 |
| **6LRH 14/33** | | 3627 | 2446 | 1181 | 100 | 144 |
| **6LRH 14/34** | | 3694 | 2513 | 1181 | 100 | 148 |
| **6LRH 14/35** | | 3761 | 2580 | 1181 | 100 | 152 |
| **6LRH 14/36** | | 3828 | 2647 | 1181 | 100 | 157 |
| **6LRH 14/37** | | 3895 | 2714 | 1181 | 100 | 161 |

# 6LRH 14

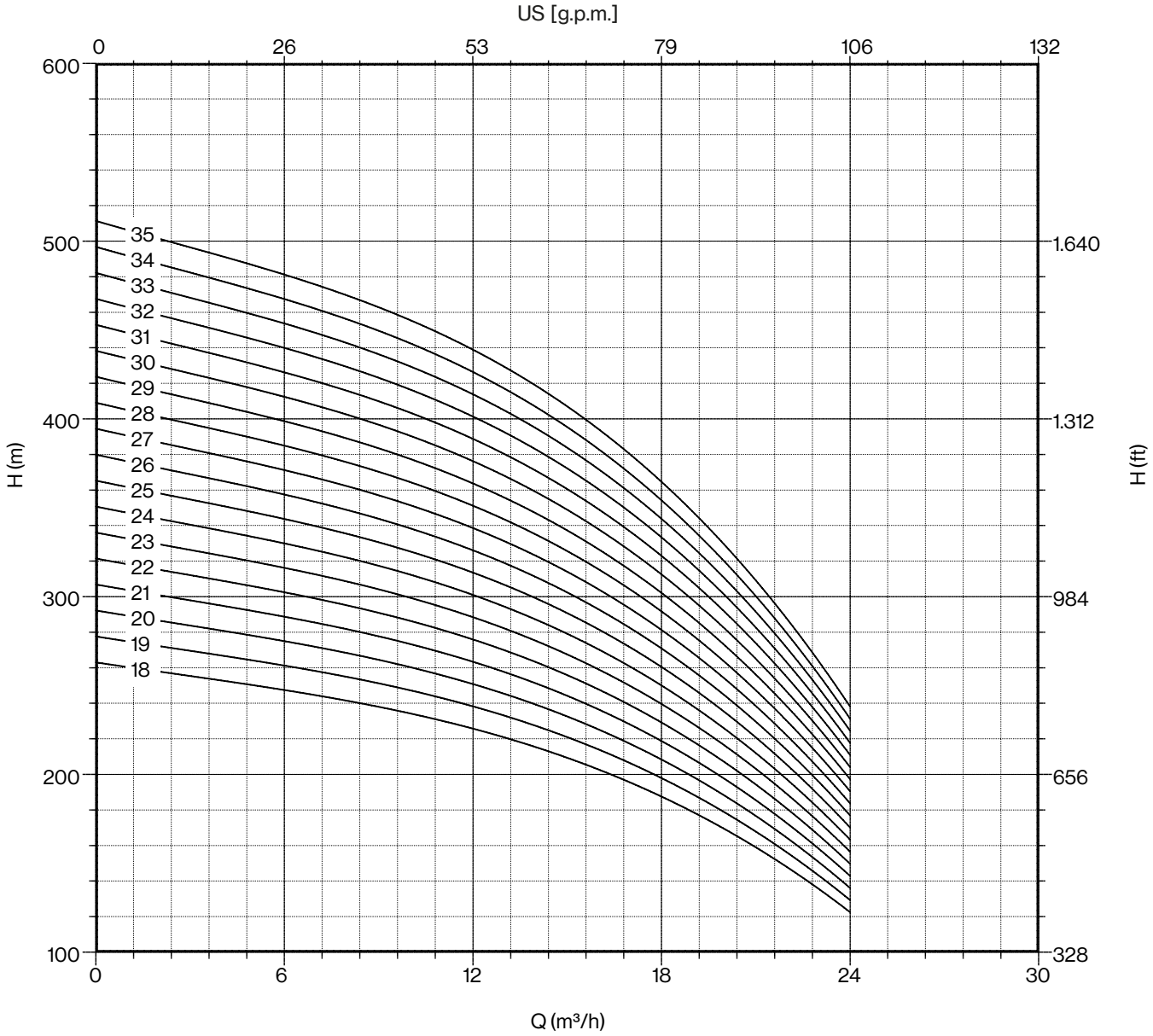


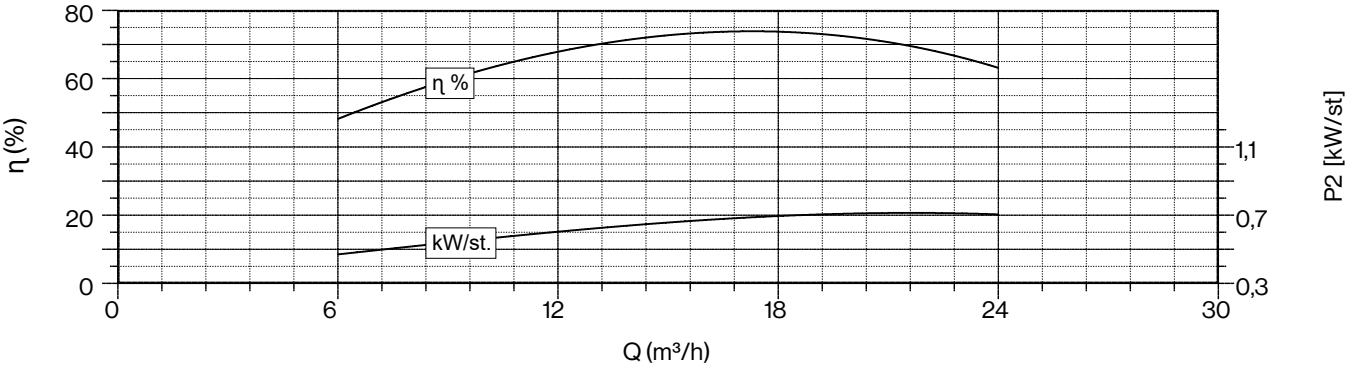




*Drinking water compatibility according DM 174*
*MEI ≥ 0,4 (regulation EU N. 547/2012)*
*Models with less than 3 stages reduce the % eff. of 5%*
*Hydraulic performance according to ISO 9906 grade 3B*

| 50 Hz - 2900 rpm | | | | | Q | | | | | | | | |
|---|---|---|---|---|---|---|---|---|---|---|---|---|---|
| TYPE | SUITABLE MOTOR 3~ 400V | | | l/min | 0 | 150 | 200 | 250 | 300 | 350 | 400 | 450 | 500 |
| | P2 | | CURRENT | l/sec | 0,0 | 2,5 | 3,3 | 4,2 | 5,0 | 5,8 | 6,7 | 7,5 | 8,3 |
| | HP | kW | A | m³/h | 0 | 9 | 12 | 15 | 18 | 21 | 24 | 27 | 30 |
| **6LRH 20/01** | 1,5 | 1,1 | 3,4 | | 15 | 14 | 14 | 13 | 12 | 11 | 10 | 9 | 7 |
| **6LRH 20/02** | 3 | 2,2 | 6,4 | | 29 | 28 | 27 | 26 | 25 | 23 | 20 | 17 | 14 |
| **6LRH 20/03** | 4 | 3 | 8,3 | | 44 | 42 | 41 | 40 | 37 | 34 | 30 | 26 | 21 |
| **6LRH 20/04** | 5,5 | 4 | 9,6 | | 58 | 56 | 54 | 53 | 50 | 45 | 40 | 35 | 28 |
| **6LRH 20/05** | 7,5 | 5,5 | 13,6 | | 73 | 71 | 68 | 66 | 62 | 57 | 51 | 44 | 35 |
| **6LRH 20/06** | 7,5 | 5,5 | 13,6 | | 87 | 85 | 82 | 79 | 74 | 68 | 61 | 52 | 42 |
| **6LRH 20/07** | 10 | 7,5 | 16,3 | | 102 | 99 | 95 | 92 | 87 | 79 | 71 | 61 | 49 |
| **6LRH 20/08** | 10 | 7,5 | 16,3 | | 116 | 113 | 109 | 106 | 99 | 90 | 81 | 70 | 56 |
| **6LRH 20/09** | 12,5 | 9,2 | 19,9 | H | 131 | 127 | 122 | 119 | 112 | 102 | 91 | 78 | 63 |
| **6LRH 20/10** | 12,5 | 9,2 | 19,9 | (m) | 145 | 141 | 136 | 132 | 124 | 113 | 101 | 87 | 70 |
| **6LRH 20/11** | 15 | 11 | 23,4 | | 160 | 155 | 150 | 145 | 136 | 124 | 111 | 96 | 77 |
| **6LRH 20/12** | 15 | 11 | 23,4 | | 174 | 169 | 163 | 158 | 149 | 136 | 121 | 104 | 84 |
| **6LRH 20/13** | 17,5 | 13 | 27,3 | | 189 | 183 | 177 | 172 | 161 | 147 | 131 | 113 | 91 |
| **6LRH 20/14** | 17,5 | 13 | 27,3 | | 203 | 197 | 190 | 185 | 174 | 158 | 141 | 122 | 98 |
| **6LRH 20/15** | 20 | 15 | 31,5 | | 218 | 212 | 204 | 198 | 186 | 170 | 152 | 131 | 105 |
| **6LRH 20/16** | 20 | 15 | 31,5 | | 232 | 226 | 218 | 211 | 198 | 181 | 162 | 139 | 112 |
| **6LRH 20/17** | 25 | 18,5 | 38,3 | | 247 | 240 | 231 | 224 | 211 | 192 | 172 | 148 | 119 |
| **6LRH 20/18** | 25 | 18,5 | 38,3 | | 261 | 254 | 245 | 238 | 223 | 203 | 182 | 157 | 126 |

| | |
|---|---|
| **Max Eff. %** | 76 |
| **Max kW / St.** | 0,93 |

| **NPSH (m)** | Q=25% | Q=50% | Q=75% | Q=100% |
|---|---|---|---|---|
| | 3 | 3 | 4 | 6 |

| TYPE 3~ | MOTOR BRACKET | DIMENSIONS (mm) | | | WEIGHT (kg) | |
|---|---|---|---|---|---|---|
| | | A | B | C | MOTOR | PUMP |
| **6LRH 20/01-4** | 4" NEMA | 652 | 302 | 350 | 8,7 | 11 |
| **6LRH 20/02-4** | | 789 | 369 | 420 | 12 | 15 |
| **6LRH 20/03-4** | | 854 | 436 | 418 | 12,8 | 20 |
| **6LRH 20/04-4** | | 971 | 503 | 468 | 15,3 | 24 |
| **6LRH 20/05-4** | | 1108 | 570 | 538 | 18,6 | 28 |
| **6LRH 20/06-4** | | 1175 | 637 | 538 | 18,6 | 32 |
| **6LRH 20/07** | 6" NEMA | 1405 | 704 | 701 | 55 | 36 |
| **6LRH 20/08** | | 1472 | 771 | 701 | 55 | 40 |
| **6LRH 20/09** | | 1589 | 838 | 751 | 60 | 44 |
| **6LRH 20/10** | | 1656 | 905 | 751 | 60 | 49 |
| **6LRH 20/11** | | 1783 | 972 | 811 | 65 | 53 |
| **6LRH 20/12** | | 1850 | 1039 | 811 | 65 | 57 |
| **6LRH 20/13** | | 1947 | 1106 | 841 | 70 | 61 |
| **6LRH 20/14** | | 2014 | 1173 | 841 | 70 | 65 |
| **6LRH 20/15** | | 2171 | 1240 | 931 | 75 | 69 |
| **6LRH 20/16** | | 2238 | 1307 | 931 | 75 | 74 |
| **6LRH 20/17** | | 2365 | 1374 | 991 | 83 | 78 |
| **6LRH 20/18** | | 2432 | 1441 | 991 | 83 | 82 |

# 6LRH 20

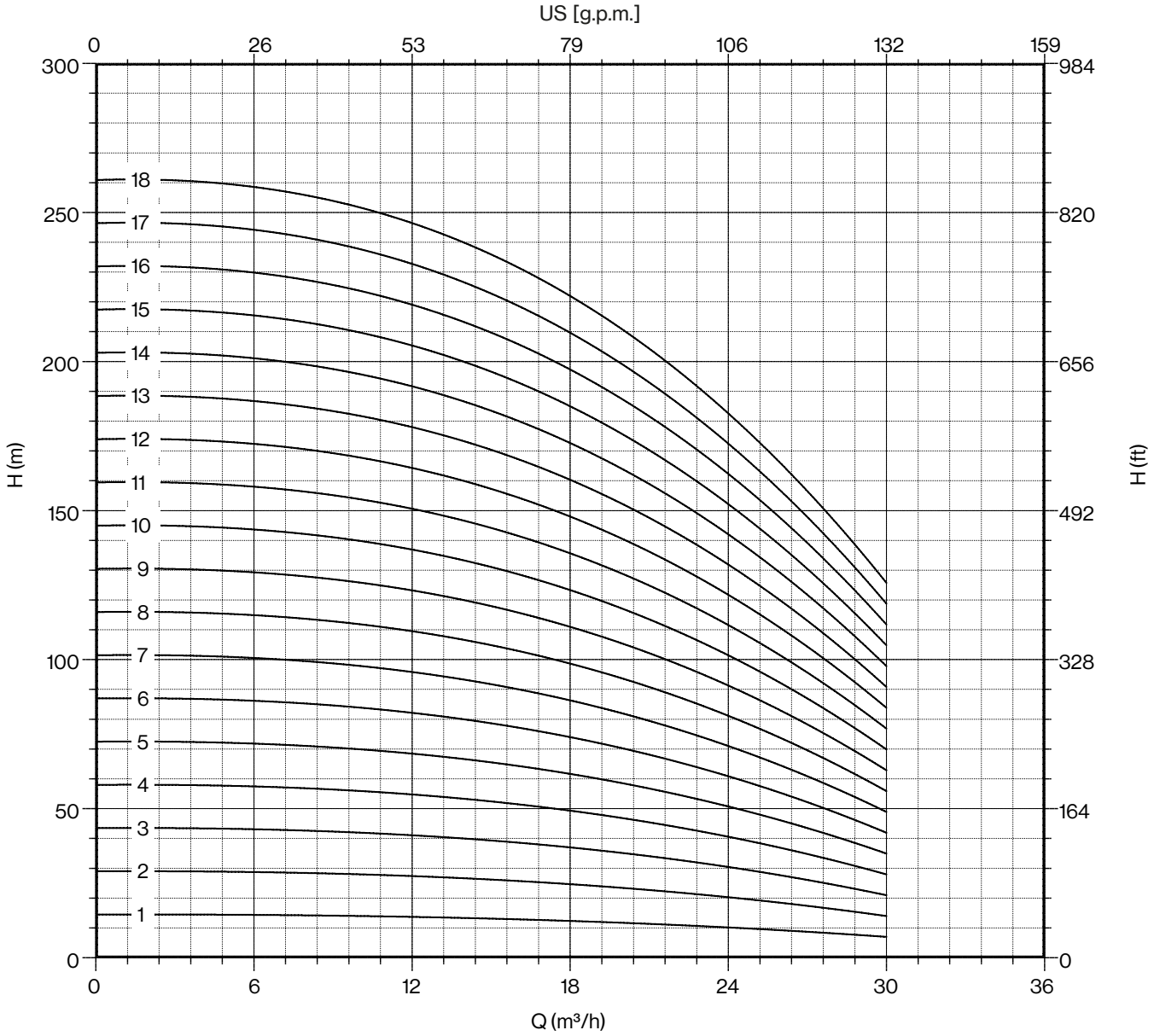


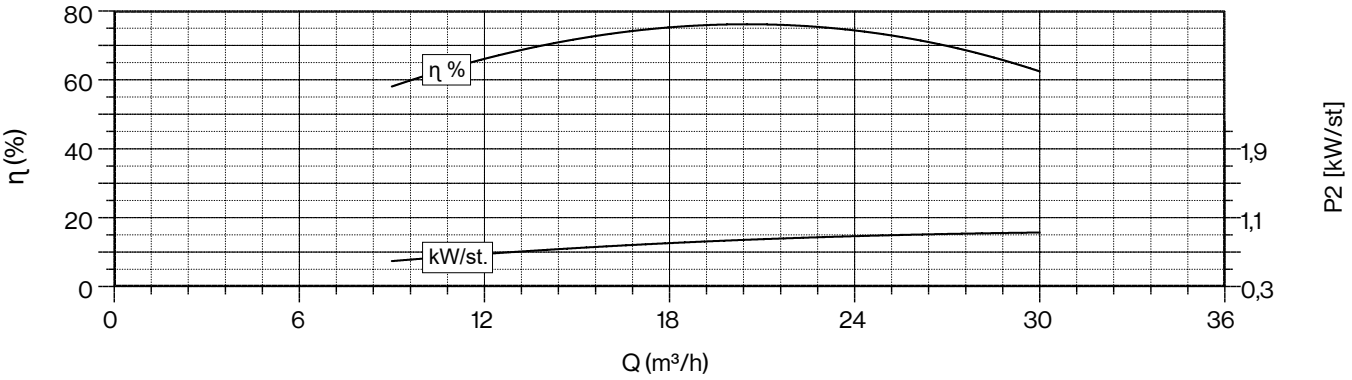




*Drinking water compatibility according DM 174*
*MEI ≥ 0,4 (regulation EU N. 547/2012)*
*Models with less than 3 stages reduce the % eff. of 5%*
*Hydraulic performance according to ISO 9906 grade 3B*

| 50 Hz - 2900 rpm | | | | | Q | | | | | | | | |
|---|---|---|---|---|---|---|---|---|---|---|---|---|---|
| TYPE | SUITABLE MOTOR 3~ 400V | | | l/min | 0 | 150 | 200 | 250 | 300 | 350 | 400 | 450 | 500 |
| | P2 | | CURRENT | l/sec | 0,0 | 2,5 | 3,3 | 4,2 | 5,0 | 5,8 | 6,7 | 7,5 | 8,3 |
| | HP | kW | A | m³/h | 0 | 9 | 12 | 15 | 18 | 21 | 24 | 27 | 30 |
| **6LRH 20/19** | 25 | 18,5 | 38,3 | H (m) | 276 | 268 | 258 | 251 | 236 | 215 | 192 | 165 | 133 |
| **6LRH 20/20** | 25 | 18,5 | 38,3 | | 290 | 282 | 272 | 264 | 248 | 226 | 202 | 174 | 140 |
| **6LRH 20/21** | 30 | 22 | 45,1 | | 305 | 296 | 286 | 277 | 260 | 237 | 212 | 183 | 147 |
| **6LRH 20/22** | 30 | 22 | 45,1 | | 319 | 310 | 299 | 290 | 273 | 249 | 222 | 191 | 154 |
| **6LRH 20/23** | 30 | 22 | 45,1 | | 334 | 324 | 313 | 304 | 285 | 260 | 232 | 200 | 161 |
| **6LRH 20/24** | 30 | 22 | 45,1 | | 348 | 338 | 326 | 317 | 298 | 271 | 242 | 209 | 168 |
| **6LRH 20/25** | 35 | 26 | 52,9 | | 363 | 353 | 340 | 330 | 310 | 283 | 253 | 218 | 175 |
| **6LRH 20/26** | 35 | 26 | 52,9 | | 377 | 367 | 354 | 343 | 322 | 294 | 263 | 226 | 182 |
| **6LRH 20/27** | 35 | 26 | 52,9 | | 392 | 381 | 367 | 356 | 335 | 305 | 273 | 235 | 189 |
| **6LRH 20/28** | 35 | 26 | 52,9 | | 406 | 395 | 381 | 370 | 347 | 316 | 283 | 244 | 196 |
| **6LRH 20/29** | 40 | 30 | 61,1 | | 421 | 409 | 394 | 383 | 360 | 328 | 293 | 252 | 203 |
| **6LRH 20/30** | 40 | 30 | 61,1 | | 435 | 423 | 408 | 396 | 372 | 339 | 303 | 261 | 210 |
| **6LRH 20/31** | 40 | 30 | 61,1 | | 450 | 437 | 422 | 409 | 384 | 350 | 313 | 270 | 217 |
| **6LRH 20/32** | 40 | 30 | 61,1 | | 464 | 451 | 435 | 422 | 397 | 362 | 323 | 278 | 224 |
| **6LRH 20/33** | 50 | 37 | 75,8 | | 479 | 465 | 449 | 436 | 409 | 373 | 333 | 287 | 231 |
| **6LRH 20/34** | 50 | 37 | 75,8 | | 493 | 479 | 462 | 449 | 422 | 384 | 343 | 296 | 238 |
| **6LRH 20/35** | 50 | 37 | 75,8 | | 508 | 494 | 476 | 462 | 434 | 396 | 354 | 305 | 245 |

| | |
|---|---|
| **Max Eff. %** | 76 |
| **Max kW / St.** | 0,93 |

| **NPSH (m)** | Q=25% | Q=50% | Q=75% | Q=100% |
|---|---|---|---|---|
| | 3 | 3 | 4 | 6 |

| TYPE 3~ | MOTOR BRACKET | DIMENSIONS (mm) | | | WEIGHT (kg) | |
|---|---|---|---|---|---|---|
| | | A | B | C | MOTOR | PUMP |
| **6LRH 20/19** | 6" NEMA | 2499 | 1508 | 991 | 83 | 86 |
| **6LRH 20/20** | | 2566 | 1575 | 991 | 83 | 90 |
| **6LRH 20/21** | | 2713 | 1642 | 1071 | 92 | 94 |
| **6LRH 20/22** | | 2780 | 1709 | 1071 | 92 | 98 |
| **6LRH 20/23** | | 2847 | 1776 | 1071 | 92 | 103 |
| **6LRH 20/24** | | 2914 | 1843 | 1071 | 92 | 107 |
| **6LRH 20/25** | | 3091 | 1910 | 1181 | 100 | 111 |
| **6LRH 20/26** | | 3158 | 1977 | 1181 | 100 | 115 |
| **6LRH 20/27** | | 3225 | 2044 | 1181 | 100 | 119 |
| **6LRH 20/28** | | 3292 | 2111 | 1181 | 100 | 123 |
| **6LRH 20/29** | | 3429 | 2178 | 1251 | 108 | 127 |
| **6LRH 20/30** | | 3496 | 2245 | 1251 | 108 | 132 |
| **6LRH 20/31** | | 3563 | 2312 | 1251 | 108 | 136 |
| **6LRH 20/32** | | 3630 | 2379 | 1251 | 108 | 140 |
| **6LRH 20/33** | | 3787 | 2446 | 1341 | 118 | 144 |
| **6LRH 20/34** | | 3854 | 2513 | 1341 | 118 | 148 |
| **6LRH 20/35** | | 3921 | 2580 | 1341 | 118 | 152 |

# 6LRH 20

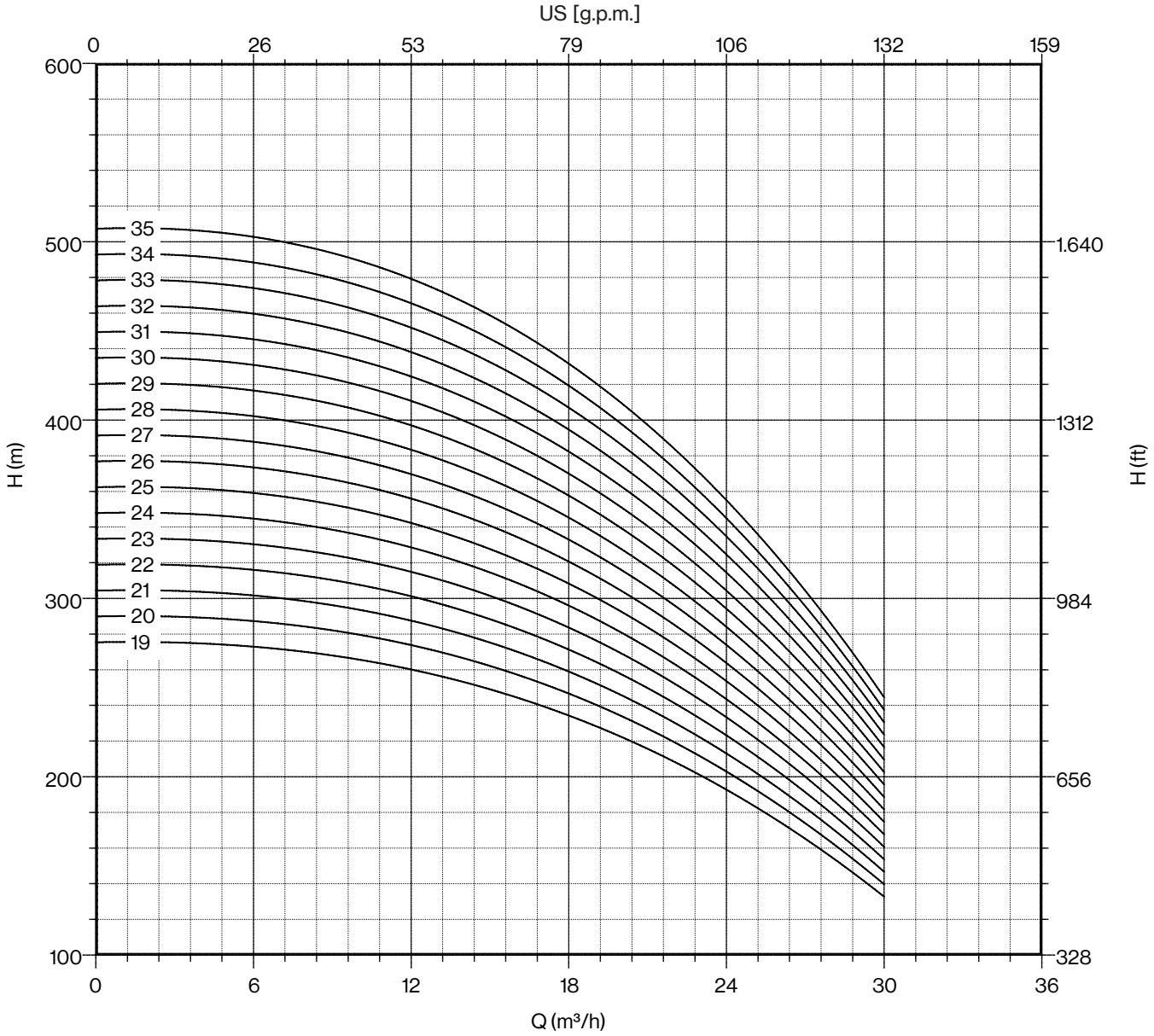


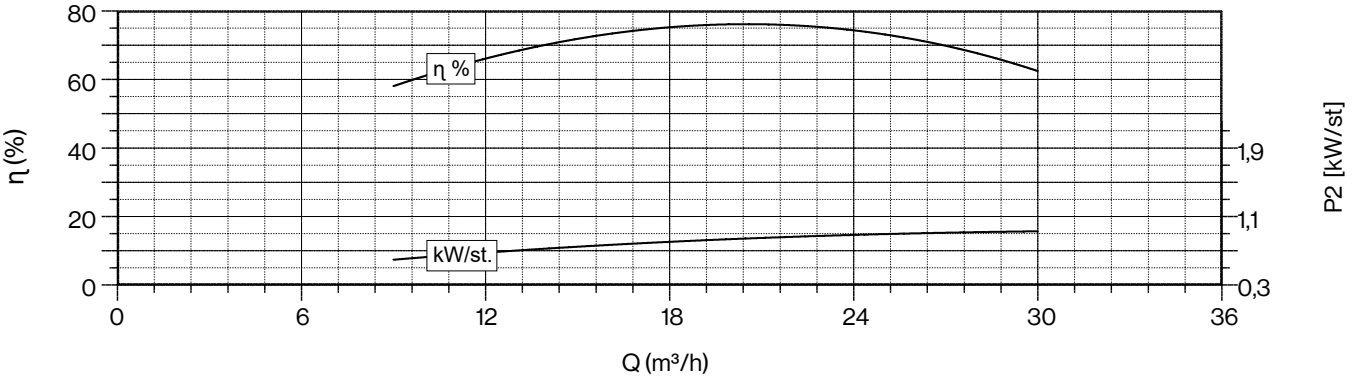




*Drinking water compatibility according DM 174*
*MEI ≥ 0,4 (regulation EU N. 547/2012)*
*Models with less than 3 stages reduce the % eff. of 5%*
*Hydraulic performance according to ISO 9906 grade 3B*

| 50 Hz - 2900 rpm | | | | | Q | | | | | | | | | |
|---|---|---|---|---|---|---|---|---|---|---|---|---|---|---|
| TYPE | SUITABLE MOTOR 3~ 400V | | | l/min | 0 | 200 | 250 | 300 | 350 | 400 | 450 | 500 | 550 | 600 |
| | P2 | | CURRENT | l/sec | 0,0 | 3,3 | 4,2 | 5,0 | 5,8 | 6,7 | 7,5 | 8,3 | 9,2 | 10,0 |
| | HP | kW | A | m³/h | 0 | 12 | 15 | 18 | 21 | 24 | 27 | 30 | 33 | 36 |
| **6LRH 25/01** | 1,5 | 1,1 | 3,4 | | 15 | 15 | 14 | 14 | 13 | 12 | 11 | 10 | 9 | 8 |
| **6LRH 25/02** | 3 | 2,2 | 6,4 | | 30 | 29 | 28 | 27 | 26 | 24 | 23 | 21 | 18 | 16 |
| **6LRH 25/03** | 5,5 | 4 | 9,6 | | 44 | 44 | 42 | 41 | 39 | 37 | 34 | 31 | 28 | 24 |
| **6LRH 25/04** | 7,5 | 5,5 | 13,6 | | 59 | 58 | 56 | 54 | 52 | 49 | 45 | 41 | 37 | 32 |
| **6LRH 25/05** | 10 | 7,5 | 16,3 | | 74 | 73 | 71 | 68 | 65 | 61 | 57 | 52 | 46 | 41 |
| **6LRH 25/06** | 10 | 7,5 | 16,3 | | 89 | 87 | 85 | 82 | 78 | 73 | 68 | 62 | 55 | 49 |
| **6LRH 25/07** | 12,5 | 9,2 | 19,9 | | 104 | 102 | 99 | 95 | 91 | 85 | 79 | 72 | 64 | 57 |
| **6LRH 25/08** | 12,5 | 9,2 | 19,9 | H | 118 | 116 | 113 | 109 | 104 | 98 | 90 | 82 | 74 | 65 |
| **6LRH 25/09** | 15 | 11 | 23,4 | (m) | 133 | 131 | 127 | 122 | 117 | 110 | 102 | 93 | 83 | 73 |
| **6LRH 25/10** | 17,5 | 13 | 27,3 | | 148 | 145 | 141 | 136 | 130 | 122 | 113 | 103 | 92 | 81 |
| **6LRH 25/11** | 17,5 | 13 | 27,3 | | 163 | 160 | 155 | 150 | 143 | 134 | 124 | 113 | 101 | 89 |
| **6LRH 25/12** | 20 | 15 | 31,5 | | 178 | 174 | 169 | 163 | 156 | 146 | 136 | 124 | 110 | 97 |
| **6LRH 25/13** | 20 | 15 | 31,5 | | 192 | 189 | 183 | 177 | 169 | 159 | 147 | 134 | 120 | 105 |
| **6LRH 25/14** | 25 | 18,5 | 38,3 | | 207 | 203 | 197 | 190 | 182 | 171 | 158 | 144 | 129 | 113 |
| **6LRH 25/15** | 25 | 18,5 | 38,3 | | 222 | 218 | 212 | 204 | 195 | 183 | 170 | 155 | 138 | 122 |
| **6LRH 25/16** | 25 | 18,5 | 38,3 | | 237 | 232 | 226 | 218 | 208 | 195 | 181 | 165 | 147 | 130 |

| | |
|---|---|
| **Max Eff. %** | 78,5 |
| **Max kW / St.** | 1,15 |

| **NPSH (m)** | Q=25% | Q=50% | Q=75% | Q=100% |
|---|---|---|---|---|
| | 3 | 3 | 4,5 | 6,6 |

| TYPE 3~ | MOTOR BRACKET | DIMENSIONS (mm) | | | WEIGHT (kg) | |
|---|---|---|---|---|---|---|
| | | A | B | C | MOTOR | PUMP |
| **6LRH 25/01-4** | 4" NEMA | 652 | 302 | 350 | 8,7 | 11 |
| **6LRH 25/02-4** | | 789 | 369 | 420 | 12 | 15 |
| **6LRH 25/03-4** | | 904 | 436 | 468 | 15,3 | 20 |
| **6LRH 25/04-4** | | 1041 | 503 | 538 | 18,6 | 24 |
| **6LRH 25/05** | 6" NEMA | 1271 | 570 | 701 | 55 | 28 |
| **6LRH 25/06** | | 1338 | 637 | 701 | 55 | 32 |
| **6LRH 25/07** | | 1455 | 704 | 751 | 60 | 36 |
| **6LRH 25/08** | | 1522 | 771 | 751 | 60 | 40 |
| **6LRH 25/09** | | 1649 | 838 | 811 | 65 | 44 |
| **6LRH 25/10** | | 1746 | 905 | 841 | 70 | 49 |
| **6LRH 25/11** | | 1813 | 972 | 841 | 70 | 53 |
| **6LRH 25/12** | | 1970 | 1039 | 931 | 75 | 57 |
| **6LRH 25/13** | | 2037 | 1106 | 931 | 75 | 61 |
| **6LRH 25/14** | | 2164 | 1173 | 991 | 83 | 65 |
| **6LRH 25/15** | | 2231 | 1240 | 991 | 83 | 69 |
| **6LRH 25/16** | | 2298 | 1307 | 991 | 83 | 74 |

# 6LRH 25

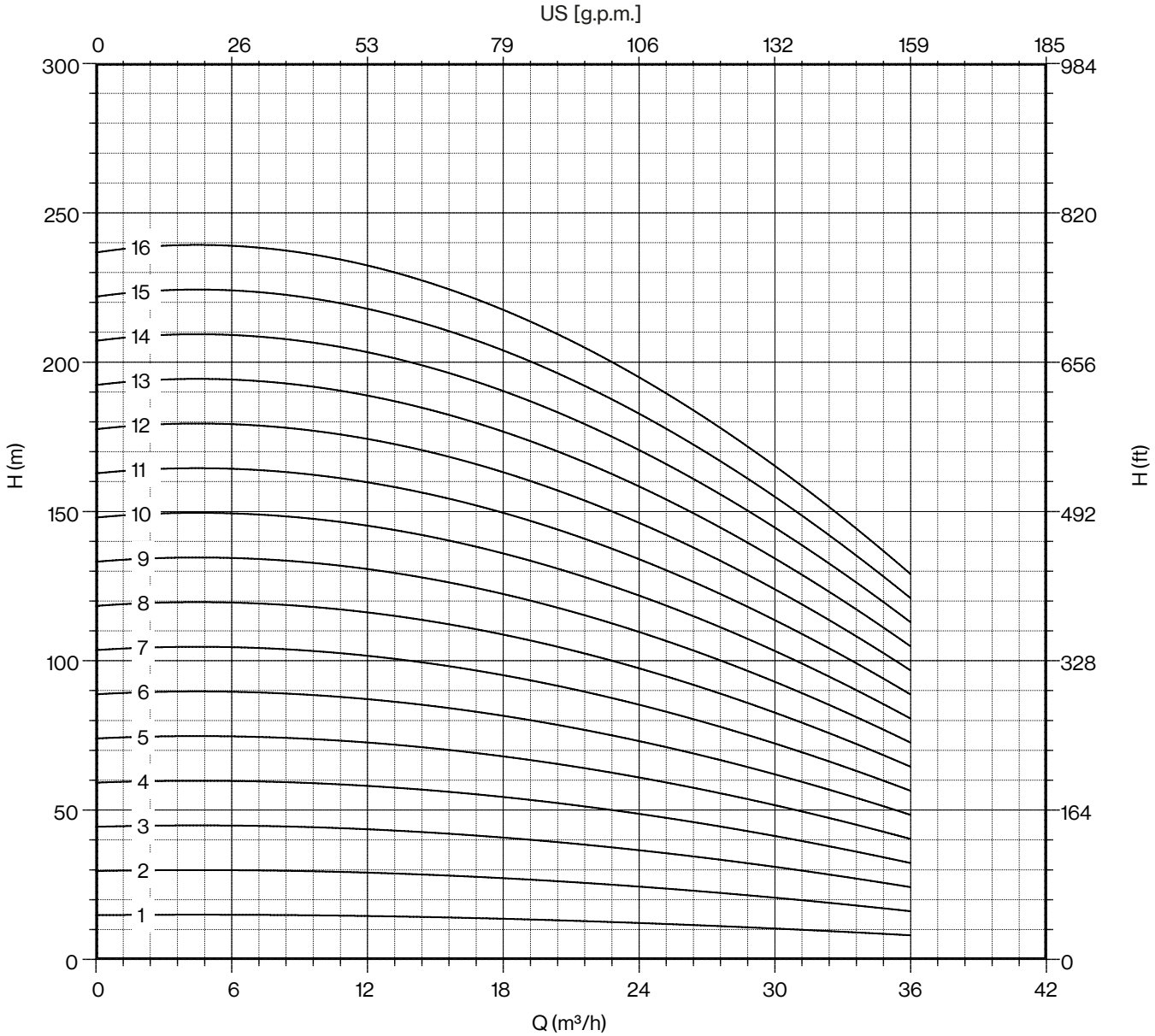


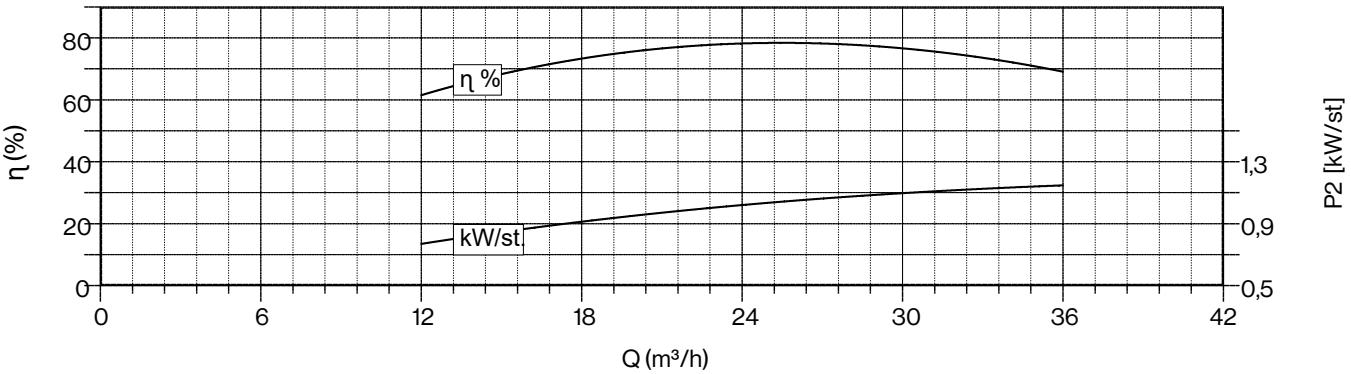




*Drinking water compatibility according DM 174*
*MEI ≥ 0,4 (regulation EU N. 547/2012)*
*Models with less than 3 stages reduce the % eff. of 5%*
*Hydraulic performance according to ISO 9906 grade 3B*

| 50 Hz - 2900 rpm | | | | | Q | | | | | | | | | |
|---|---|---|---|---|---|---|---|---|---|---|---|---|---|---|
| TYPE | SUITABLE MOTOR 3~ 400V | | | l/min | 0 | 200 | 250 | 300 | 350 | 400 | 450 | 500 | 550 | 600 |
| | P2 | | CURRENT | l/sec | 0,0 | 3,3 | 4,2 | 5,0 | 5,8 | 6,7 | 7,5 | 8,3 | 9,2 | 10,0 |
| | HP | kW | A | m³/h | 0 | 12 | 15 | 18 | 21 | 24 | 27 | 30 | 33 | 36 |
| **6LRH 25/17** | 30 | 22 | 45,1 | H (m) | 252 | 247 | 240 | 231 | 221 | 207 | 192 | 175 | 156 | 138 |
| **6LRH 25/18** | 30 | 22 | 45,1 | | 266 | 261 | 254 | 245 | 234 | 220 | 203 | 185 | 166 | 146 |
| **6LRH 25/19** | 30 | 22 | 45,1 | | 281 | 276 | 268 | 258 | 247 | 232 | 215 | 196 | 175 | 154 |
| **6LRH 25/20** | 35 | 26 | 52,9 | | 296 | 290 | 282 | 272 | 260 | 244 | 226 | 206 | 184 | 162 |
| **6LRH 25/21** | 35 | 26 | 52,9 | | 311 | 305 | 296 | 286 | 273 | 256 | 237 | 216 | 193 | 170 |
| **6LRH 25/22** | 35 | 26 | 52,9 | | 326 | 319 | 310 | 299 | 286 | 268 | 249 | 227 | 202 | 178 |
| **6LRH 25/23** | 35 | 26 | 52,9 | | 340 | 334 | 324 | 313 | 299 | 281 | 260 | 237 | 212 | 186 |
| **6LRH 25/24** | 40 | 30 | 61,1 | | 355 | 348 | 338 | 326 | 312 | 293 | 271 | 247 | 221 | 194 |
| **6LRH 25/25** | 40 | 30 | 61,1 | | 370 | 363 | 353 | 340 | 325 | 305 | 283 | 258 | 230 | 203 |
| **6LRH 25/26** | 40 | 30 | 61,1 | | 385 | 377 | 367 | 354 | 338 | 317 | 294 | 268 | 239 | 211 |
| **6LRH 25/27** | 50 | 37 | 75,8 | | 400 | 392 | 381 | 367 | 351 | 329 | 305 | 278 | 248 | 219 |
| **6LRH 25/28** | 50 | 37 | 75,8 | | 414 | 406 | 395 | 381 | 364 | 342 | 316 | 288 | 258 | 227 |
| **6LRH 25/29** | 50 | 37 | 75,8 | | 429 | 421 | 409 | 394 | 377 | 354 | 328 | 299 | 267 | 235 |
| **6LRH 25/30** | 50 | 37 | 75,8 | | 444 | 435 | 423 | 408 | 390 | 366 | 339 | 309 | 276 | 243 |
| **6LRH 25/31** | 50 | 37 | 75,8 | | 459 | 450 | 437 | 422 | 403 | 378 | 350 | 319 | 285 | 251 |
| **6LRH 25/32** | 50 | 37 | 75,8 | | 474 | 464 | 451 | 435 | 416 | 390 | 362 | 330 | 294 | 259 |
| **6LRH 25/33** | 50 | 37 | 75,8 | | 488 | 479 | 465 | 449 | 429 | 403 | 373 | 340 | 304 | 267 |

| | |
|---|---|
| **Max Eff. %** | 78,5 |
| **Max kW / St.** | 1,15 |

| **NPSH (m)** | Q=25% | Q=50% | Q=75% | Q=100% |
|---|---|---|---|---|
| | 3 | 3 | 4,5 | 6,6 |

| TYPE 3~ | MOTOR BRACKET | DIMENSIONS (mm) | | | WEIGHT (kg) | |
|---|---|---|---|---|---|---|
| | | A | B | C | MOTOR | PUMP |
| **6LRH 25/17** | 6" NEMA | 2445 | 1374 | 1071 | 92 | 78 |
| **6LRH 25/18** | | 2512 | 1441 | 1071 | 92 | 82 |
| **6LRH 25/19** | | 2579 | 1508 | 1071 | 92 | 86 |
| **6LRH 25/20** | | 2756 | 1575 | 1181 | 100 | 90 |
| **6LRH 25/21** | | 2823 | 1642 | 1181 | 100 | 94 |
| **6LRH 25/22** | | 2890 | 1709 | 1181 | 100 | 98 |
| **6LRH 25/23** | | 2957 | 1776 | 1181 | 100 | 103 |
| **6LRH 25/24** | | 3094 | 1843 | 1251 | 108 | 107 |
| **6LRH 25/25** | | 3161 | 1910 | 1251 | 108 | 111 |
| **6LRH 25/26** | | 3228 | 1977 | 1251 | 108 | 115 |
| **6LRH 25/27** | | 3385 | 2044 | 1341 | 118 | 119 |
| **6LRH 25/28** | | 3452 | 2111 | 1341 | 118 | 123 |
| **6LRH 25/29** | | 3519 | 2178 | 1341 | 118 | 127 |
| **6LRH 25/30** | | 3586 | 2245 | 1341 | 118 | 132 |
| **6LRH 25/31** | | 3653 | 2312 | 1341 | 118 | 136 |
| **6LRH 25/32** | | 3720 | 2379 | 1341 | 118 | 140 |
| **6LRH 25/33** | | 3787 | 2446 | 1341 | 118 | 144 |

# 6LRH 25

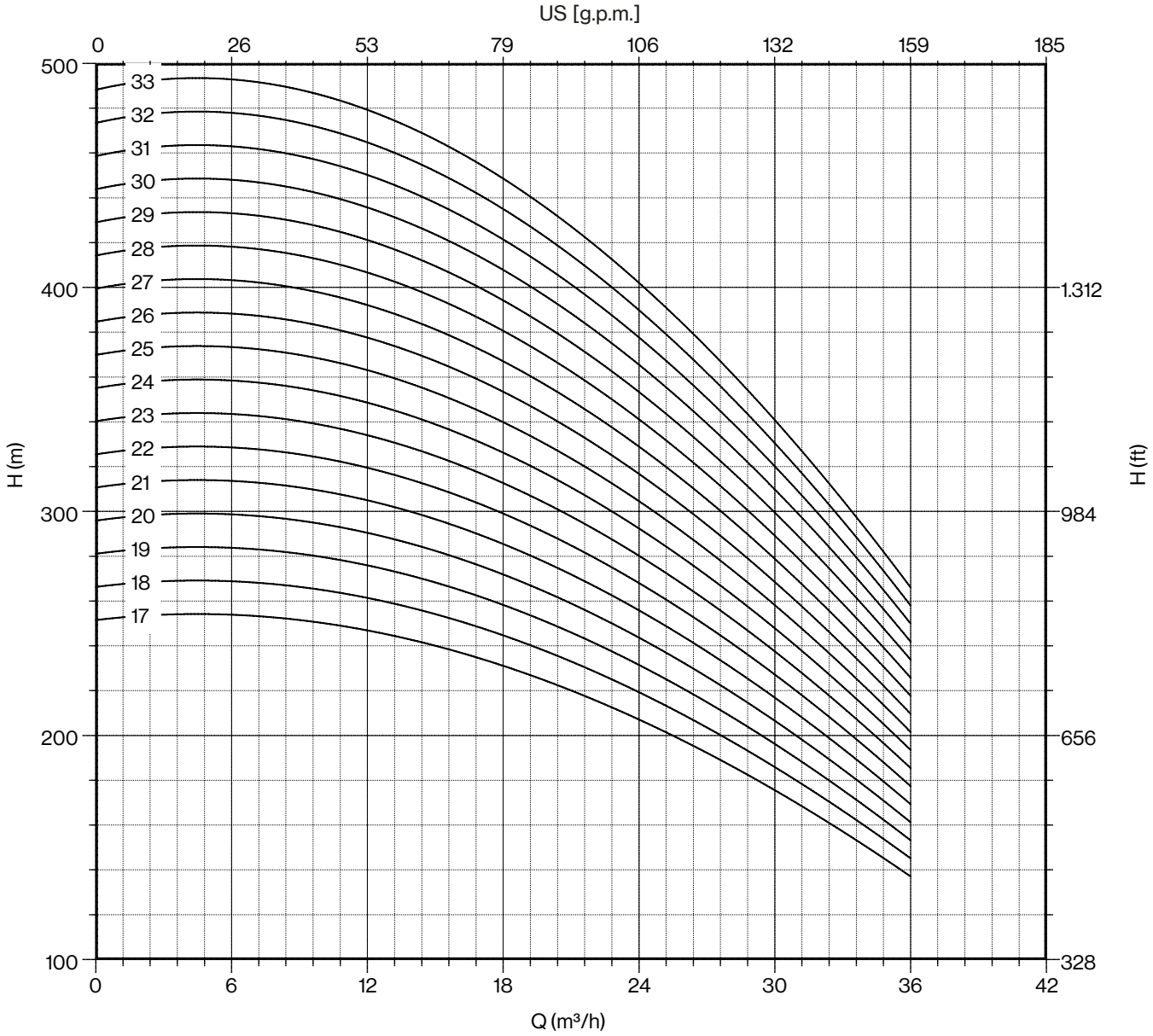


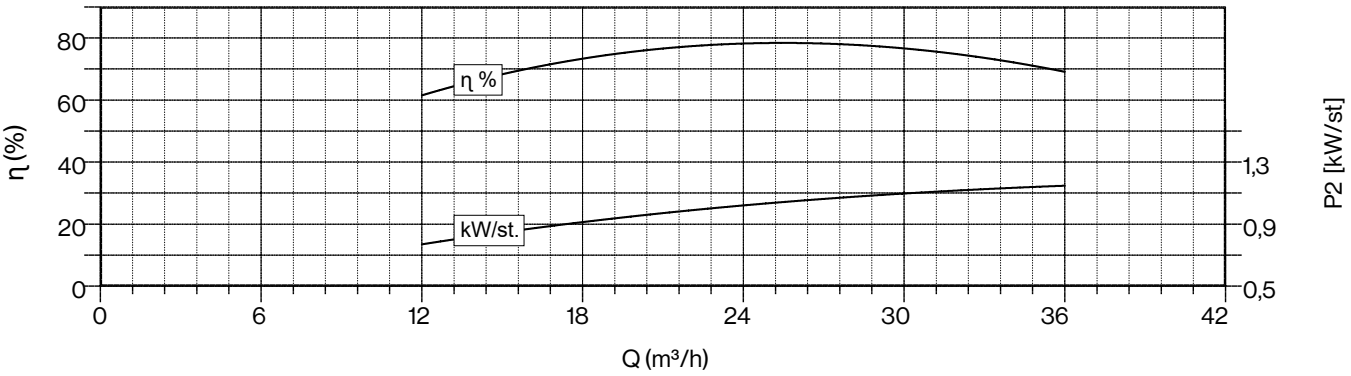




*Drinking water compatibility according DM 174*
*MEI ≥ 0,4 (regulation EU N. 547/2012)*
*Models with less than 3 stages reduce the % eff. of 5%*
*Hydraulic performance according to ISO 9906 grade 3B*

| 50 Hz - 2900 rpm | | | | | Q | | | | | | | | | | |
|---|---|---|---|---|---|---|---|---|---|---|---|---|---|---|---|
| TYPE | SUITABLE MOTOR 3~ 400V | | | l/min | 0 | 250 | 300 | 350 | 400 | 450 | 500 | 550 | 600 | 650 | 700 |
| | P2 | | CURRENT | l/sec | 0,0 | 4,2 | 5,0 | 5,8 | 6,7 | 7,5 | 8,3 | 9,2 | 10,0 | 10,8 | 11,7 |
| | HP | kW | A | m³/h | 0 | 15 | 18 | 21 | 24 | 27 | 30 | 33 | 36 | 39 | 42 |
| **6LRH 32/01** | 2 | 1,5 | 4,6 | H (m) | 15 | 15 | 15 | 14 | 14 | 13 | 12 | 11 | 10 | 9 | 8 |
| **6LRH 32/02** | 4 | 3 | 8,3 | | 31 | 30 | 29 | 28 | 27 | 26 | 24 | 22 | 20 | 18 | 15 |
| **6LRH 32/03** | 5,5 | 4 | 9,6 | | 46 | 45 | 44 | 42 | 41 | 38 | 36 | 33 | 30 | 26 | 23 |
| **6LRH 32/04** | 7,5 | 5,5 | 13,6 | | 61 | 60 | 59 | 56 | 54 | 51 | 48 | 44 | 40 | 35 | 30 |
| **6LRH 32/05** | 10 | 7,5 | 16,3 | | 77 | 76 | 74 | 71 | 68 | 64 | 60 | 56 | 50 | 44 | 38 |
| **6LRH 32/06** | 12,5 | 9,2 | 19,9 | | 92 | 91 | 88 | 85 | 81 | 77 | 72 | 67 | 60 | 53 | 45 |
| **6LRH 32/07** | 12,5 | 9,2 | 19,9 | | 107 | 106 | 103 | 99 | 95 | 90 | 84 | 78 | 70 | 62 | 53 |
| **6LRH 32/08** | 15 | 11 | 23,4 | | 122 | 121 | 118 | 113 | 108 | 102 | 96 | 89 | 80 | 70 | 60 |
| **6LRH 32/09** | 17,5 | 13 | 27,3 | | 138 | 136 | 132 | 127 | 122 | 115 | 108 | 100 | 90 | 79 | 68 |
| **6LRH 32/10** | 20 | 15 | 31,5 | | 153 | 151 | 147 | 141 | 135 | 128 | 120 | 111 | 100 | 88 | 75 |
| **6LRH 32/11** | 20 | 15 | 31,5 | | 168 | 166 | 162 | 155 | 149 | 141 | 132 | 122 | 110 | 97 | 83 |
| **6LRH 32/12** | 25 | 18,5 | 38,3 | | 184 | 181 | 176 | 169 | 162 | 154 | 144 | 133 | 120 | 106 | 90 |
| **6LRH 32/13** | 25 | 18,5 | 38,3 | | 199 | 196 | 191 | 183 | 176 | 166 | 156 | 144 | 130 | 114 | 98 |
| **6LRH 32/14** | 25 | 18,5 | 38,3 | | 214 | 211 | 206 | 197 | 189 | 179 | 168 | 155 | 140 | 123 | 105 |

| | |
|---|---|
| **Max Eff. %** | 77,5 |
| **Max kW / St.** | 1,35 |

| **NPSH (m)** | Q=25% | Q=50% | Q=75% | Q=100% |
|---|---|---|---|---|
| | 3,4 | 3,4 | 3,9 | 7,5 |

| TYPE 3~ | MOTOR BRACKET | DIMENSIONS (mm) | | | WEIGHT (kg) | |
|---|---|---|---|---|---|---|
| | | A | B | C | MOTOR | PUMP |
| **6LRH 32/01-4** | 4" NEMA | 687 | 302 | 385 | 10,4 | 11 |
| **6LRH 32/02-4** | | 787 | 369 | 418 | 12,8 | 15 |
| **6LRH 32/03-4** | | 904 | 436 | 468 | 15,3 | 20 |
| **6LRH 32/04-4** | | 1041 | 503 | 538 | 18,6 | 24 |
| **6LRH 32/05** | 6" NEMA | 1271 | 570 | 701 | 55 | 28 |
| **6LRH 32/06** | | 1388 | 637 | 751 | 60 | 32 |
| **6LRH 32/07** | | 1455 | 704 | 751 | 60 | 36 |
| **6LRH 32/08** | | 1582 | 771 | 811 | 65 | 40 |
| **6LRH 32/09** | | 1679 | 838 | 841 | 70 | 44 |
| **6LRH 32/10** | | 1836 | 905 | 931 | 75 | 49 |
| **6LRH 32/11** | | 1903 | 972 | 931 | 75 | 53 |
| **6LRH 32/12** | | 2030 | 1039 | 991 | 83 | 57 |
| **6LRH 32/13** | | 2097 | 1106 | 991 | 83 | 61 |
| **6LRH 32/14** | | 2164 | 1173 | 991 | 83 | 65 |

# 6LRH 32

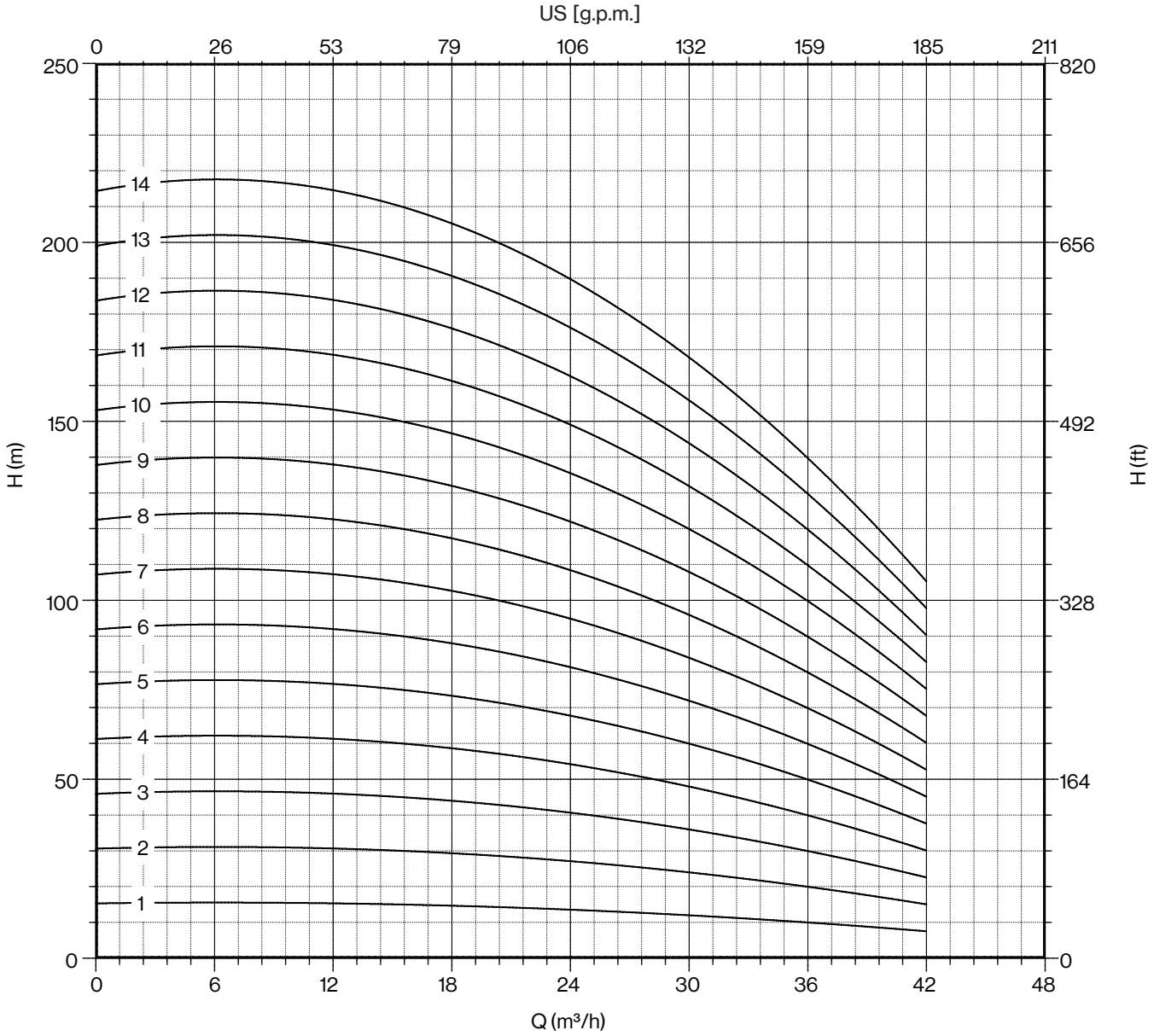


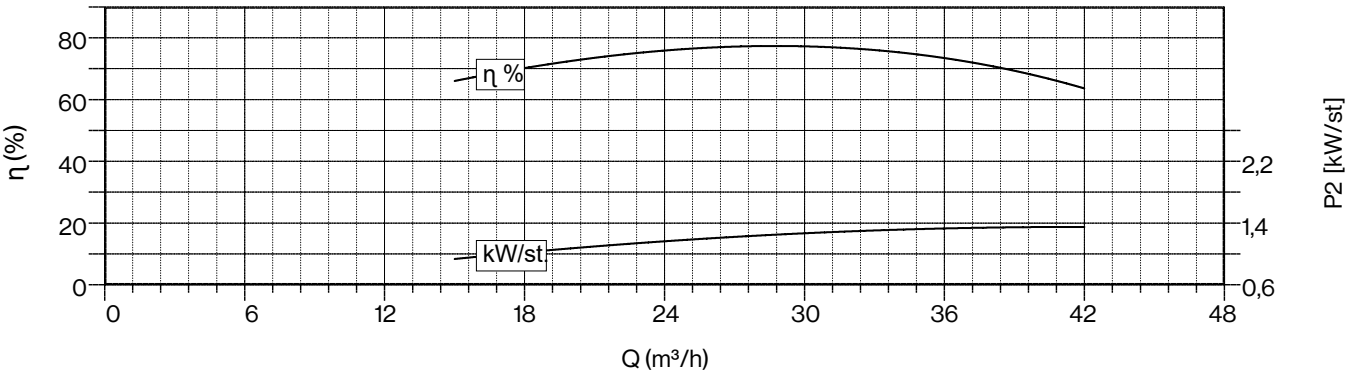




*Drinking water compatibility according DM 174*
*MEI ≥ 0,4 (regulation EU N. 547/2012)*
*Models with less than 3 stages reduce the % eff. of 5%*
*Hydraulic performance according to ISO 9906 grade 3B*

| 50 Hz - 2900 rpm | | | | | Q | | | | | | | | | | |
|---|---|---|---|---|---|---|---|---|---|---|---|---|---|---|---|
| TYPE | SUITABLE MOTOR 3~ 400V | | | l/min | 0 | 250 | 300 | 350 | 400 | 450 | 500 | 550 | 600 | 650 | 700 |
| | P2 | | CURRENT | l/sec | 0,0 | 4,2 | 5,0 | 5,8 | 6,7 | 7,5 | 8,3 | 9,2 | 10,0 | 10,8 | 11,7 |
| | HP | kW | A | m³/h | 0 | 15 | 18 | 21 | 24 | 27 | 30 | 33 | 36 | 39 | 42 |
| **6LRH 32/15** | 30 | 22 | 45,1 | H (m) | 230 | 227 | 221 | 212 | 203 | 192 | 180 | 167 | 150 | 132 | 113 |
| **6LRH 32/16** | 30 | 22 | 45,1 | | 245 | 242 | 235 | 226 | 216 | 205 | 192 | 178 | 160 | 141 | 120 |
| **6LRH 32/17** | 35 | 26 | 52,9 | | 260 | 257 | 250 | 240 | 230 | 218 | 204 | 189 | 170 | 150 | 128 |
| **6LRH 32/18** | 35 | 26 | 52,9 | | 275 | 272 | 265 | 254 | 243 | 230 | 216 | 200 | 180 | 158 | 135 |
| **6LRH 32/19** | 35 | 26 | 52,9 | | 291 | 287 | 279 | 268 | 257 | 243 | 228 | 211 | 190 | 167 | 143 |
| **6LRH 32/20** | 40 | 30 | 61,1 | | 306 | 302 | 294 | 282 | 270 | 256 | 240 | 222 | 200 | 176 | 150 |
| **6LRH 32/21** | 40 | 30 | 61,1 | | 321 | 317 | 309 | 296 | 284 | 269 | 252 | 233 | 210 | 185 | 158 |
| **6LRH 32/22** | 40 | 30 | 61,1 | | 337 | 332 | 323 | 310 | 297 | 282 | 264 | 244 | 220 | 194 | 165 |
| **6LRH 32/23** | 50 | 37 | 75,8 | | 352 | 347 | 338 | 324 | 311 | 294 | 276 | 255 | 230 | 202 | 173 |
| **6LRH 32/24** | 50 | 37 | 75,8 | | 367 | 362 | 353 | 338 | 324 | 307 | 288 | 266 | 240 | 211 | 180 |
| **6LRH 32/25** | 50 | 37 | 75,8 | | 383 | 378 | 368 | 353 | 338 | 320 | 300 | 278 | 250 | 220 | 188 |
| **6LRH 32/26** | 50 | 37 | 75,8 | | 398 | 393 | 382 | 367 | 351 | 333 | 312 | 289 | 260 | 229 | 195 |
| **6LRH 32/27** | 50 | 37 | 75,8 | | 413 | 408 | 397 | 381 | 365 | 346 | 324 | 300 | 270 | 238 | 203 |
| **6LRH 32/28** | 50 | 37 | 75,8 | | 428 | 423 | 412 | 395 | 378 | 358 | 336 | 311 | 280 | 246 | 210 |

| | |
|---|---|
| **Max Eff. %** | 77,5 |
| **Max kW / St.** | 1,35 |

| **NPSH (m)** | Q=25% | Q=50% | Q=75% | Q=100% |
|---|---|---|---|---|
| | 3,4 | 3,4 | 3,9 | 7,5 |

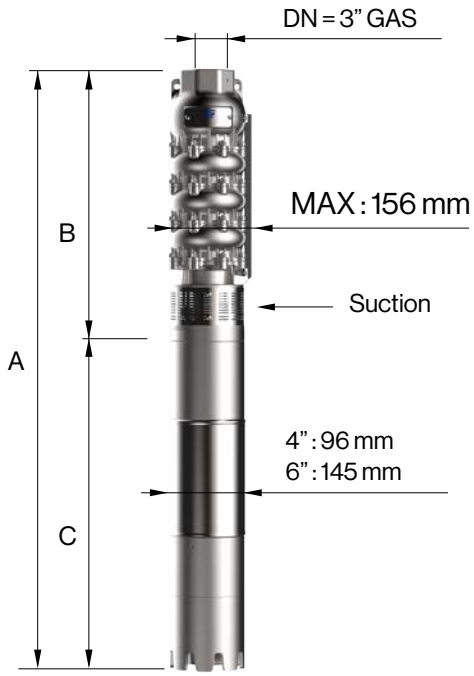


| TYPE 3~ | MOTOR BRACKET | DIMENSIONS (mm) | | | WEIGHT (kg) | |
|---|---|---|---|---|---|---|
| | | A | B | C | MOTOR | PUMP |
| **6LRH 32/15** | 6" NEMA | 2311 | 1240 | 1071 | 92 | 69 |
| **6LRH 32/16** | | 2378 | 1307 | 1071 | 92 | 74 |
| **6LRH 32/17** | | 2555 | 1374 | 1181 | 100 | 78 |
| **6LRH 32/18** | | 2622 | 1441 | 1181 | 100 | 82 |
| **6LRH 32/19** | | 2689 | 1508 | 1181 | 100 | 86 |
| **6LRH 32/20** | | 2826 | 1575 | 1251 | 108 | 90 |
| **6LRH 32/21** | | 2893 | 1642 | 1251 | 108 | 94 |
| **6LRH 32/22** | | 2960 | 1709 | 1251 | 108 | 98 |
| **6LRH 32/23** | | 3117 | 1776 | 1341 | 118 | 103 |
| **6LRH 32/24** | | 3184 | 1843 | 1341 | 118 | 107 |
| **6LRH 32/25** | | 3251 | 1910 | 1341 | 118 | 111 |
| **6LRH 32/26** | | 3318 | 1977 | 1341 | 118 | 115 |
| **6LRH 32/27** | | 3385 | 2044 | 1341 | 118 | 119 |
| **6LRH 32/28** | | 3452 | 2111 | 1341 | 118 | 123 |

** Coupled pump shaft*

# 6LRH 32

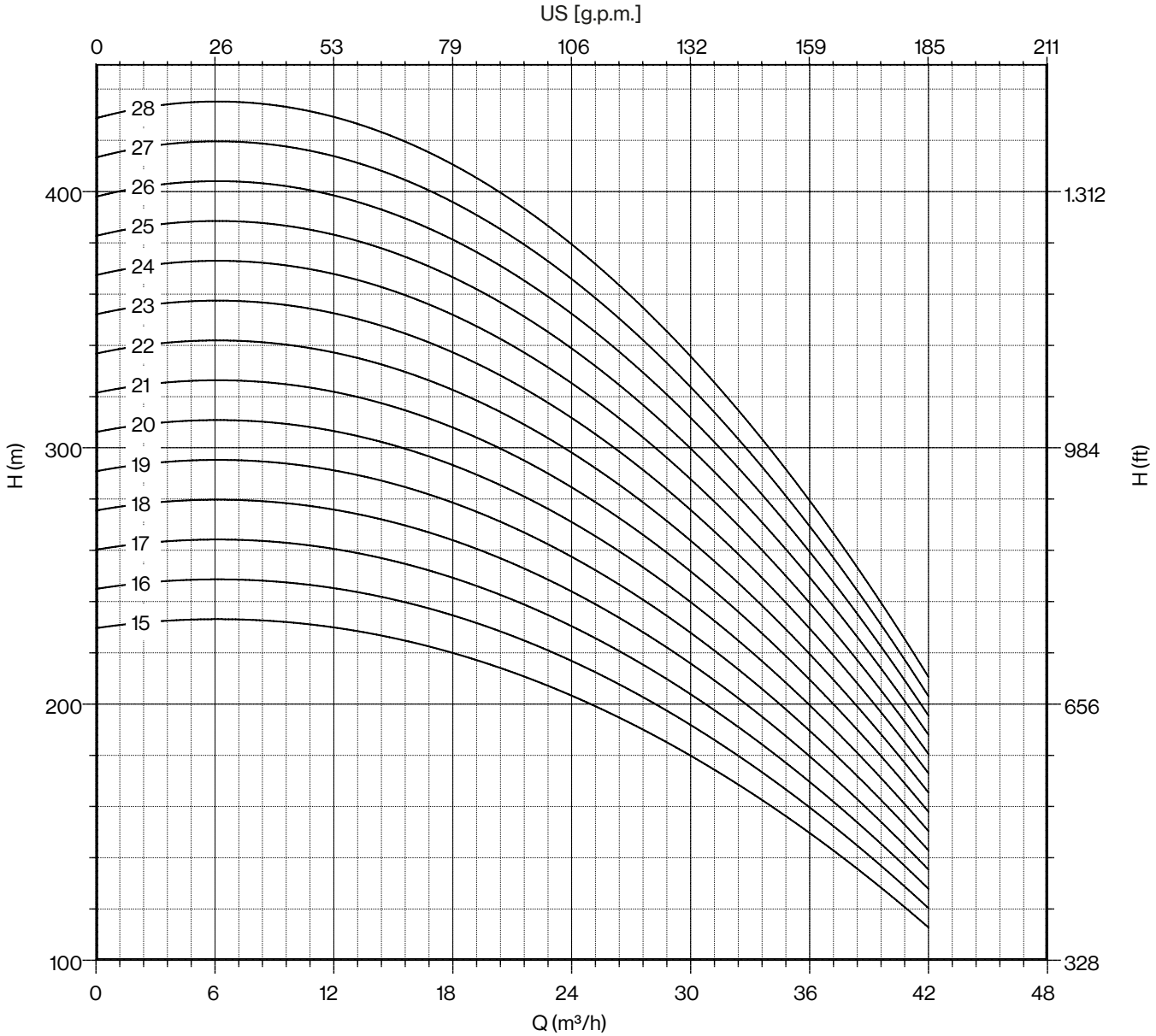


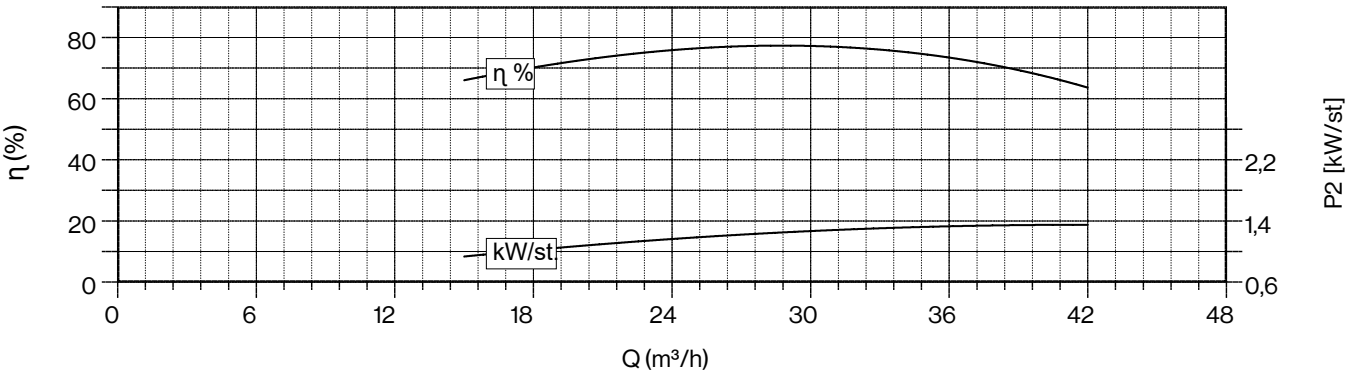




*Drinking water compatibility according DM 174*
*MEI ≥ 0,4 (regulation EU N. 547/2012)*
*Models with less than 3 stages reduce the % eff. of 5%*
*Hydraulic performance according to ISO 9906 grade 3B*

| 50 Hz - 2900 rpm | | | | | Q | | | | | | | | |
|---|---|---|---|---|---|---|---|---|---|---|---|---|---|
| TYPE | SUITABLE MOTOR 3~ 400V | | | l/min | 0 | 100 | 200 | 300 | 400 | 500 | 600 | 700 | 800 |
| | P2 | | CURRENT | l/sec | 0 | 1,7 | 3,3 | 5,0 | 6,7 | 8,3 | 10,0 | 11,7 | 13,3 |
| | HP | kW | A | m³/h | 0 | 6 | 12 | 18 | 24 | 30 | 36 | 42 | 48 |
| **6LM 38/01** | 2 | 1,5 | 4,0 | H (m) | 14 | 14 | 13 | 13 | 12 | 11 | 10 | 9 | 7 |
| **6LM 38/02** | 4 | 3 | 7,5 | | 29 | 27 | 26 | 25 | 24 | 23 | 20 | 17 | 14 |
| **6LM 38/03** | 5,5 | 4 | 10,0 | | 43 | 41 | 39 | 38 | 36 | 34 | 31 | 26 | 20 |
| **6LM 38/04** | 7,5 | 5,5 | 12,5 | | 57 | 55 | 52 | 51 | 48 | 45 | 41 | 35 | 27 |
| **6LM 38/05** | 10 | 7,5 | 16,3 | | 71 | 69 | 65 | 64 | 60 | 56 | 51 | 44 | 34 |
| **6LM 38/06** | 12,5 | 9,2 | 19,9 | | 86 | 82 | 78 | 76 | 72 | 68 | 61 | 52 | 41 |
| **6LM 38/07** | 15 | 11 | 23,4 | | 100 | 96 | 91 | 89 | 84 | 79 | 71 | 61 | 48 |
| **6LM 38/08** | 15 | 11 | 23,4 | | 114 | 110 | 104 | 102 | 96 | 90 | 81 | 70 | 55 |
| **6LM 38/09** | 17,5 | 13 | 27,3 | | 129 | 123 | 117 | 114 | 108 | 102 | 92 | 78 | 61 |
| **6LM 38/10** | 20 | 15 | 31,5 | | 143 | 137 | 130 | 127 | 120 | 113 | 102 | 87 | 68 |
| **6LM 38/11** | 20 | 15 | 31,5 | | 157 | 151 | 143 | 140 | 132 | 124 | 112 | 96 | 75 |
| **6LM 38/12** | 25 | 18,5 | 38,3 | | 172 | 164 | 156 | 152 | 144 | 136 | 122 | 104 | 82 |
| **6LM 38/13** | 25 | 18,5 | 38,3 | | 186 | 178 | 169 | 165 | 156 | 147 | 132 | 113 | 89 |
| **6LM 38/14** | 30 | 22 | 45,1 | | 200 | 192 | 182 | 178 | 168 | 158 | 143 | 122 | 95 |
| **6LM 38/15** | 30 | 22 | 45,1 | | 214 | 206 | 195 | 191 | 180 | 169 | 153 | 131 | 102 |
| **6LM 38/16** | 30 | 22 | 45,1 | | 229 | 219 | 208 | 203 | 192 | 181 | 163 | 139 | 109 |

| | |
|---|---|
| **Max Eff. %** | 76 |
| **Max kW / St.** | 1,33 |

| **NPSH (m)** | Q=25% | Q=50% | Q=75% | Q=100% |
|---|---|---|---|---|
| | 3,4 | 3,4 | 3,8 | 8 |

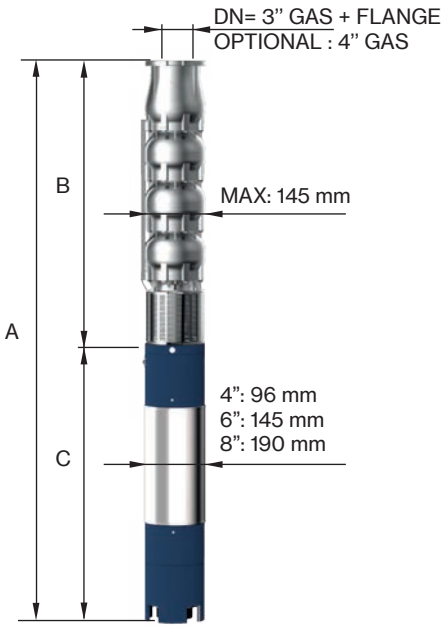


| TYPE 3~ | MOTOR BRACKET | DIMENSIONS (mm) | | | WEIGHT (kg) | |
|---|---|---|---|---|---|---|
| | | A | B | C | MOTOR | PUMP |
| **6LM 38/01-4** | 4" NEMA | 746 | 354 | 392 | 13 | 8 |
| **6LM 38/02-4** | | 1012 | 455 | 557 | 19 | 12 |
| **6LM 38/03-4** | | 1153 | 556 | 597 | 22 | 15 |
| **6LM 38/04-4** | | 1355 | 657 | 698 | 27 | 19 |
| **6LM 38/05-4** | | 1499 | 798 | 701 | 55 | 23 |
| **6LM 38/06** | 6" NEMA | 1650 | 899 | 751 | 60 | 26 |
| **6LM 38/07** | | 1811 | 1000 | 811 | 65 | 30 |
| **6LM 38/08** | | 1912 | 1101 | 811 | 65 | 33 |
| **6LM 38/09** | | 2043 | 1202 | 841 | 70 | 37 |
| **6LM 38/10** | | 2234 | 1303 | 931 | 75 | 41 |
| **6LM 38/11** | | 2335 | 1404 | 931 | 75 | 44 |
| **6LM 38/12** | | 2496 | 1505 | 991 | 83 | 48 |
| **6LM 38/13** | | 2597 | 1606 | 991 | 83 | 51 |
| **6LM 38/14** | | 2778 | 1707 | 1071 | 92 | 55 |
| **6LM 38/15** | | 2879 | 1808 | 1071 | 92 | 59 |
| **6LM 38/16** | | 2980 | 1909 | 1071 | 92 | 62 |

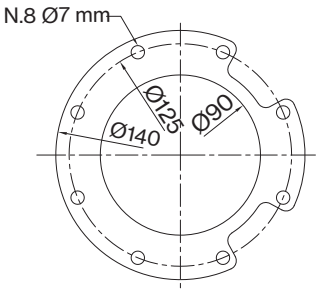


FOR COMMERCIAL TUBE
EXTERNAL DIAMETER: 88,9 mm

# 6LM 38

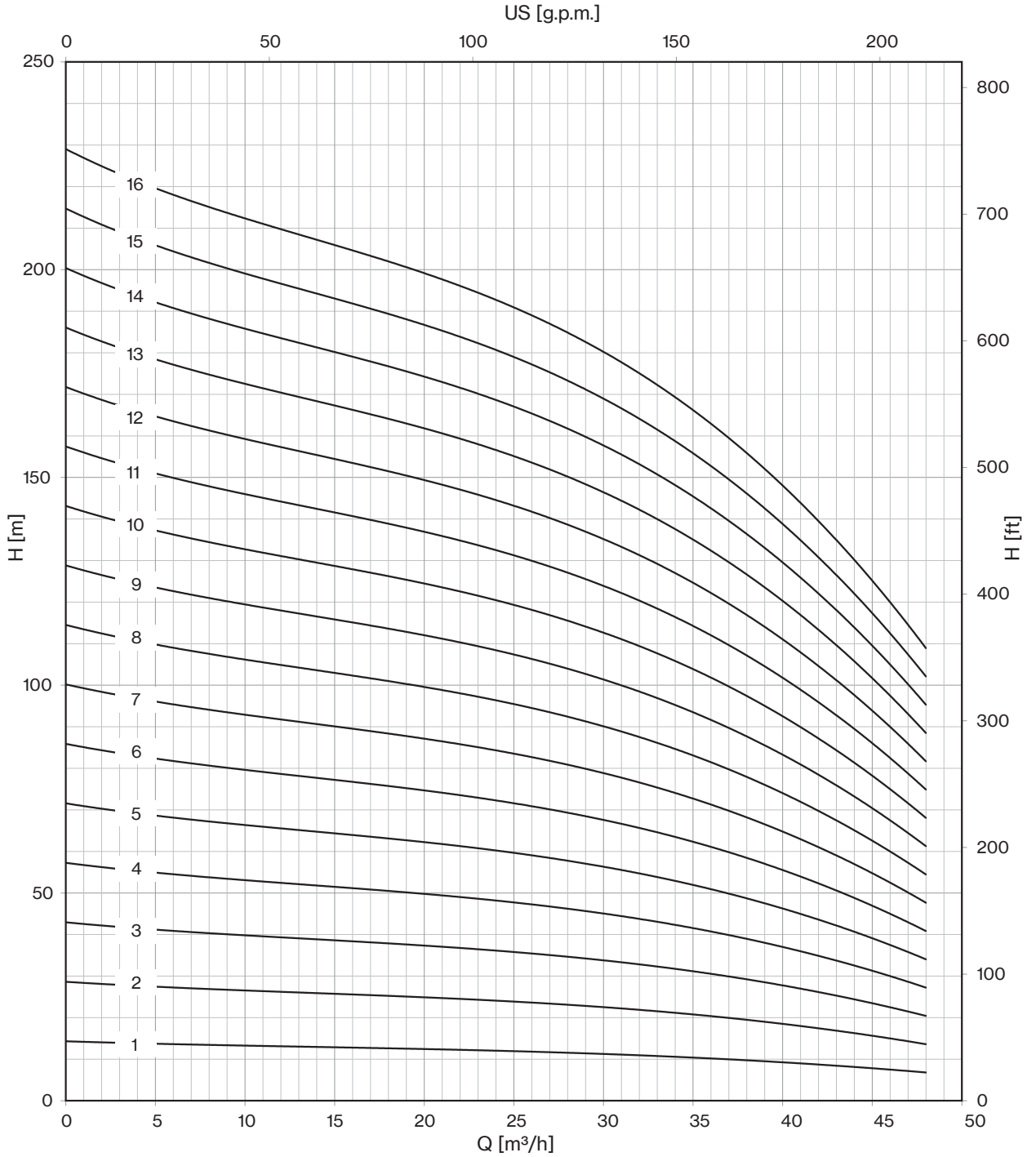


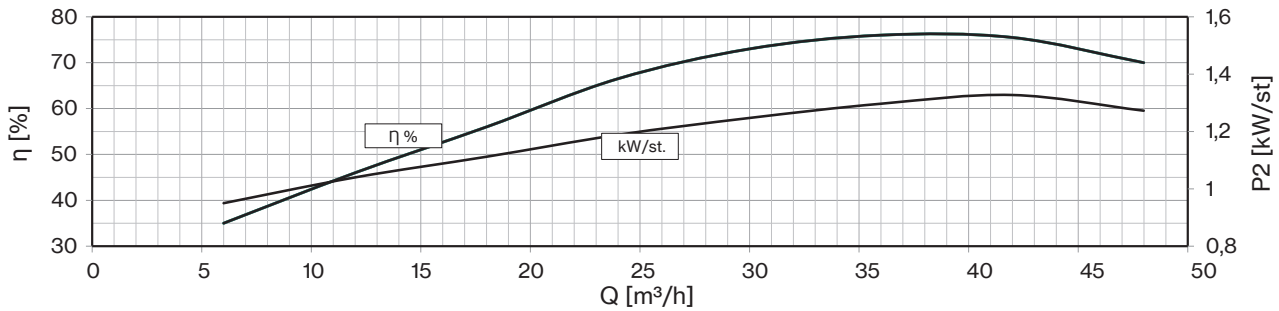




*Drinking water compatibility according DM 174*
*MEI ≥ 0,4 (regulation EU N. 547/2012)*
*Models with less than 3 stages reduce the % eff. of 5%*
*Hydraulic performance according to ISO 9906 grade 3B*

| 50 Hz - 2900 rpm | | | | | Q | | | | | | | | |
|---|---|---|---|---|---|---|---|---|---|---|---|---|---|
| TYPE | SUITABLE MOTOR 3~ 400V | | | l/min | 0 | 100 | 200 | 300 | 400 | 500 | 600 | 700 | 800 |
| | P2 | | CURRENT | l/sec | 0 | 1,7 | 3,3 | 5,0 | 6,7 | 8,3 | 10,0 | 11,7 | 13,3 |
| | HP | kW | A | m³/h | 0 | 6 | 12 | 18 | 24 | 30 | 36 | 42 | 48 |
| **6LM 38/17** | 35 | 26 | 52,9 | H (m) | 243 | 233 | 221 | 216 | 204 | 192 | 173 | 148 | 116 |
| **6LM 38/18** | 35 | 26 | 52,9 | | 257 | 247 | 234 | 229 | 216 | 203 | 183 | 157 | 123 |
| **6LM 38/19** | 35 | 26 | 52,9 | | 272 | 260 | 247 | 241 | 228 | 215 | 194 | 165 | 129 |
| **6LM 38/20** | 40 | 30 | 61,1 | | 286 | 274 | 260 | 254 | 240 | 226 | 204 | 174 | 136 |
| **6LM 38/21** | 40 | 30 | 61,1 | | 300 | 288 | 273 | 267 | 252 | 237 | 214 | 183 | 143 |
| **6LM 38/22** | 40 | 30 | 61,1 | | 315 | 301 | 286 | 279 | 264 | 249 | 224 | 191 | 150 |
| **6LM 38/23** | 50 | 37 | 75,8 | | 329 | 315 | 299 | 292 | 276 | 260 | 234 | 200 | 157 |
| **6LM 38/24** | 50 | 37 | 75,8 | | 343 | 329 | 312 | 305 | 288 | 271 | 244 | 209 | 164 |
| **6LM 38/25** | 50 | 37 | 75,8 | | 357 | 343 | 325 | 318 | 300 | 282 | 255 | 218 | 170 |
| **6LM 38/26** | 50 | 37 | 75,8 | | 372 | 356 | 338 | 330 | 312 | 294 | 265 | 226 | 177 |
| **6LM 38/27** | 50 | 37 | 75,8 | | 386 | 370 | 351 | 343 | 324 | 305 | 275 | 235 | 184 |
| **6LM 38/28** | 60 | 45 | 86,3 | | 400 | 384 | 364 | 356 | 336 | 316 | 285 | 244 | 191 |
| **6LM 38/29** | 60 | 45 | 86,3 | | 415 | 397 | 377 | 368 | 348 | 328 | 295 | 252 | 198 |
| **6LM 38/30** | 60 | 45 | 86,3 | | 429 | 411 | 390 | 381 | 360 | 339 | 306 | 261 | 204 |
| **6LM 38/31** | 60 | 45 | 86,3 | | 443 | 425 | 403 | 394 | 372 | 350 | 316 | 270 | 211 |
| **6LM 38/32** | 60 | 45 | 86,3 | | 457 | 438 | 416 | 407 | 384 | 361 | 326 | 279 | 218 |
| **6LM 38/33** | 60 | 45 | 86,3 | | 472 | 452 | 429 | 419 | 396 | 373 | 336 | 287 | 225 |

| | |
|---|---|
| **Max Eff. %** | 76 |
| **Max kW / St.** | 1,33 |

| **NPSH (m)** | Q=25% | Q=50% | Q=75% | Q=100% |
|---|---|---|---|---|
| | 3,4 | 3,4 | 3,8 | 8 |

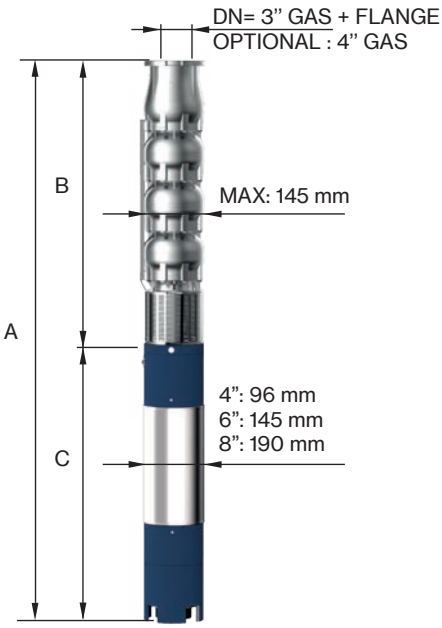


| TYPE 3~ | MOTOR BRACKET | DIMENSIONS (mm) | | | WEIGHT (kg) | |
|---|---|---|---|---|---|---|
| | | A | B | C | MOTOR | PUMP |
| **6LM 38/17** | 6" NEMA | 3191 | 2010 | 1181 | 100 | 66 |
| **6LM 38/18** | | 3292 | 2111 | 1181 | 100 | 69 |
| **6LM 38/19** | | 3393 | 2212 | 1181 | 100 | 73 |
| **6LM 38/20** | | 3564 | 2313 | 1251 | 108 | 77 |
| **6LM 38/21** | | 3665 | 2414 | 1251 | 108 | 80 |
| **6LM 38/22** | | 3766 | 2515 | 1251 | 108 | 84 |
| **6LM 38/23** | | 3957 | 2616 | 1341 | 118 | 87 |
| **6LM 38/24** | | 4058 | 2717 | 1341 | 118 | 91 |
| **6LM 38/25** | | 4159 | 2818 | 1341 | 118 | 95 |
| **6LM 38/26** | | 4260 | 2919 | 1341 | 118 | 98 |
| **6LM 38/27** | | 4361 | 3020 | 1341 | 118 | 102 |
| **6LM 38/28** | | 4311 | 3188 | 1123 | 178 | 109 |
| **6LM 38/29** | | 4412 | 3289 | 1123 | 178 | 113 |
| **6LM 38/30** | | 4513 | 3390 | 1123 | 178 | 116 |
| **6LM 38/31** | | 4614 | 3491 | 1123 | 178 | 120 |
| **6LM 38/32** | | 4715 | 3592 | 1123 | 178 | 124 |
| **6LM 38/33** | | 4816 | 3693 | 1123 | 178 | 127 |

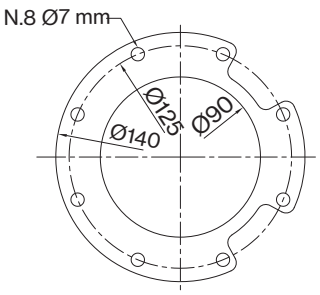


FOR COMMERCIAL TUBE
EXTERNAL DIAMETER: 88,9 mm

# 6LM 38

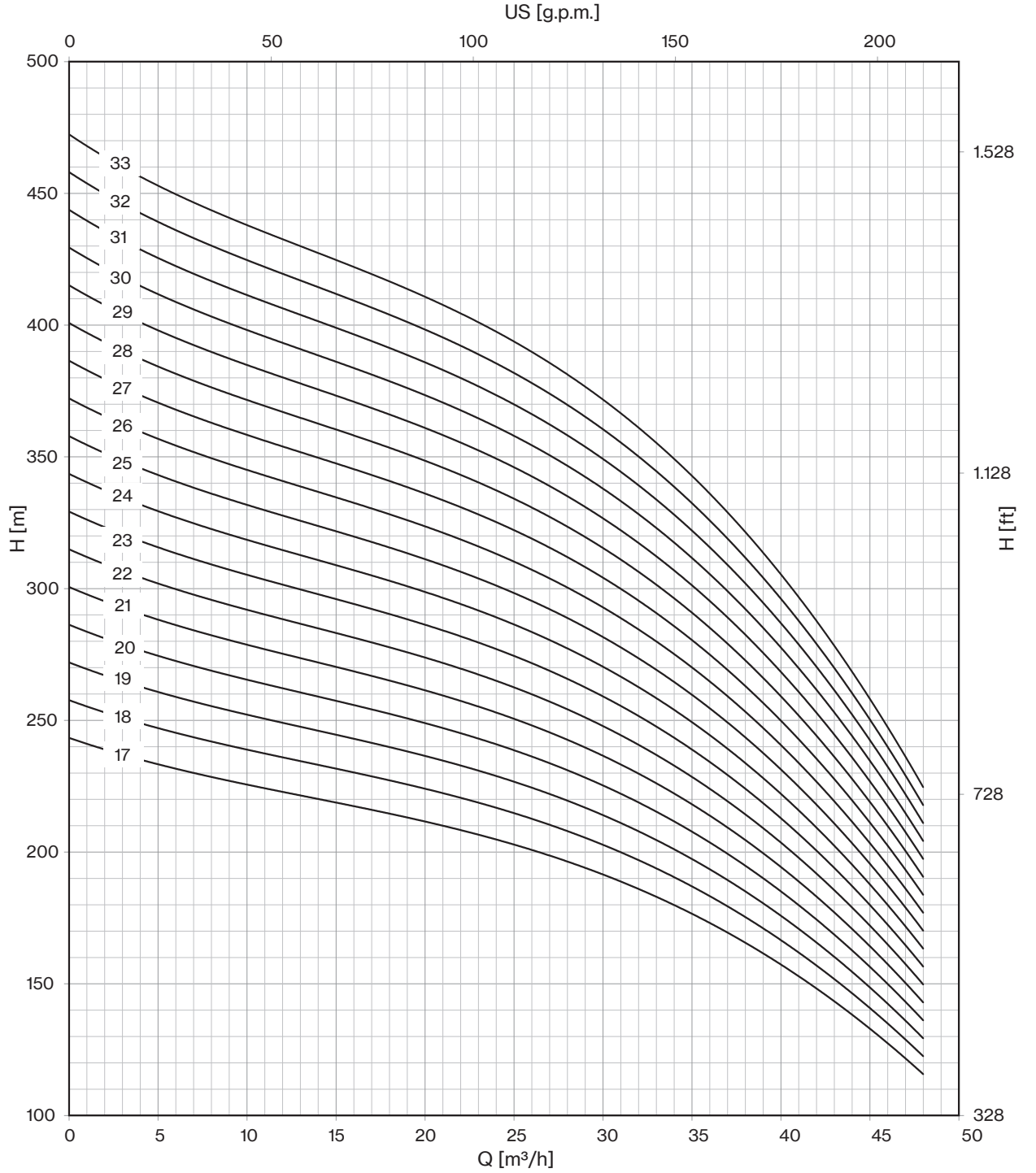


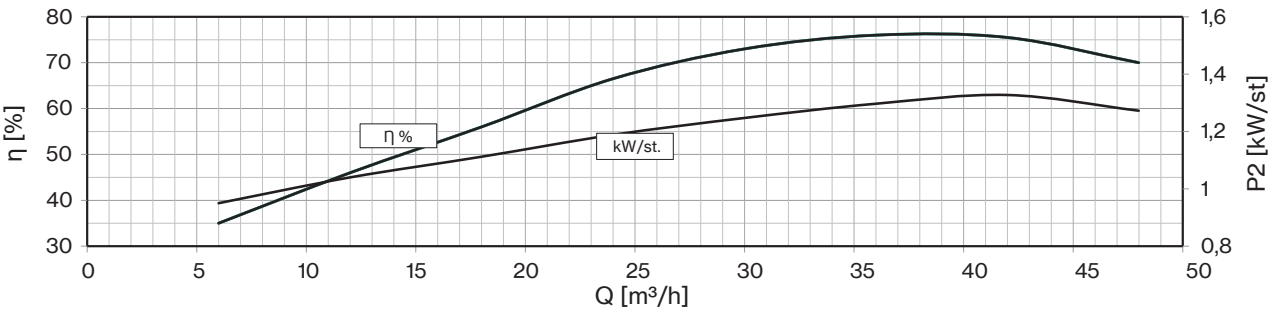




*Drinking water compatibility according DM 174*
*MEI ≥ 0,4 (regulation EU N. 547/2012)*
*Models with less than 3 stages reduce the % eff. of 5%*
*Hydraulic performance according to ISO 9906 grade 3B*

| 50 Hz - 2900 rpm | | | | | Q | | | | | | | | |
|---|---|---|---|---|---|---|---|---|---|---|---|---|---|
| TYPE | SUITABLE MOTOR 3~ 400V | | | l/min | 0 | 200 | 400 | 500 | 600 | 700 | 800 | 900 | 1000 |
| | P2 | | CURRENT | l/sec | 0 | 3,3 | 6,7 | 8,3 | 10,0 | 11,7 | 13,3 | 15,0 | 16,7 |
| | HP | kW | A | m³/h | 0 | 12 | 24 | 30 | 36 | 42 | 48 | 54 | 60 |
| **6LM 48/01** | 2 | 1,5 | 4,0 | H (m) | 14 | 14 | 11 | 11 | 11 | 10 | 9 | 7 | 6 |
| **6LM 48/02** | 4 | 3 | 7,5 | | 28 | 27 | 23 | 22 | 21 | 20 | 18 | 15 | 13 |
| **6LM 48/03** | 7,5 | 5,5 | 12,5 | | 42 | 41 | 34 | 33 | 32 | 29 | 26 | 22 | 19 |
| **6LM 48/04** | 10 | 7,5 | 16,3 | | 56 | 54 | 46 | 44 | 42 | 39 | 35 | 30 | 26 |
| **6LM 48/05** | 10 | 7,5 | 16,3 | | 70 | 68 | 57 | 56 | 53 | 49 | 44 | 37 | 32 |
| **6LM 48/06** | 12,5 | 9,2 | 19,9 | | 84 | 81 | 68 | 67 | 64 | 59 | 53 | 44 | 38 |
| **6LM 48/07** | 15 | 11 | 23,4 | | 98 | 95 | 80 | 78 | 74 | 69 | 62 | 52 | 45 |
| **6LM 48/08** | 17,5 | 13 | 27,3 | | 112 | 108 | 91 | 89 | 85 | 78 | 70 | 59 | 51 |
| **6LM 48/09** | 17,5 | 13 | 27,3 | | 126 | 122 | 103 | 100 | 95 | 88 | 79 | 67 | 58 |
| **6LM 48/10** | 20 | 15 | 31,5 | | 140 | 135 | 114 | 111 | 106 | 98 | 88 | 74 | 64 |
| **6LM 48/11** | 25 | 18,5 | 38,3 | | 154 | 149 | 125 | 122 | 117 | 108 | 97 | 81 | 70 |
| **6LM 48/12** | 25 | 18,5 | 38,3 | | 168 | 162 | 137 | 133 | 127 | 118 | 106 | 89 | 77 |
| **6LM 48/13** | 30 | 22 | 45,1 | | 182 | 176 | 148 | 144 | 138 | 127 | 114 | 96 | 83 |
| **6LM 48/14** | 30 | 22 | 45,1 | | 196 | 189 | 160 | 155 | 148 | 137 | 123 | 104 | 90 |
| **6LM 48/15** | 30 | 22 | 45,1 | | 210 | 203 | 171 | 167 | 159 | 147 | 132 | 111 | 96 |
| **6LM 48/16** | 35 | 26 | 52,9 | | 224 | 216 | 182 | 178 | 170 | 157 | 141 | 118 | 102 |

| | |
|---|---|
| **Max Eff. %** | 78,5 |
| **Max kW / St.** | 1,44 |

| **NPSH (m)** | Q=25% | Q=50% | Q=75% | Q=100% |
|---|---|---|---|---|
| | 3,45 | 3,5 | 3,8 | 5 |

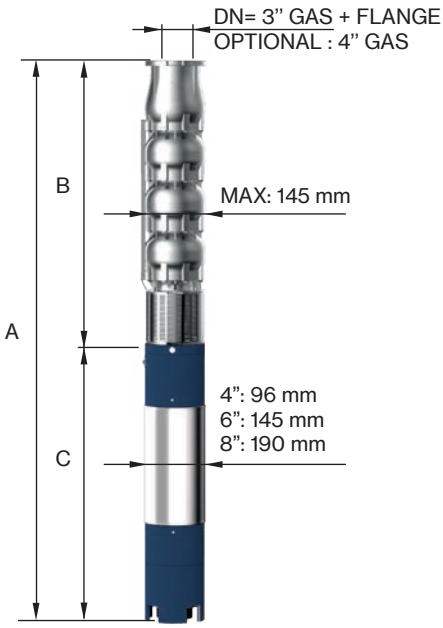


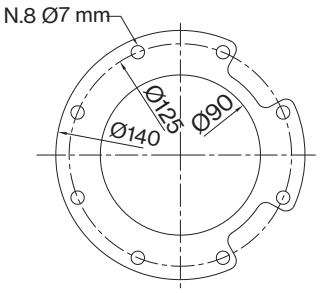


FOR COMMERCIAL TUBE
EXTERNAL DIAMETER: 88,9 mm

| TYPE 3~ | MOTOR BRACKET | DIMENSIONS (mm) | | | WEIGHT (kg) | |
|---|---|---|---|---|---|---|
| | | A | B | C | MOTOR | PUMP |
| **6LM 48/01-4** | 4" NEMA | 746 | 354 | 392 | 13 | 8 |
| **6LM 48/02-4** | | 1012 | 455 | 557 | 19 | 12 |
| **6LM 48/03-4** | | 1254 | 556 | 698 | 27 | 15 |
| **6LM 48/04** | 6" NEMA | 1358 | 657 | 701 | 55 | 19 |
| **6LM 48/05** | | 1499 | 798 | 701 | 55 | 23 |
| **6LM 48/06** | | 1650 | 899 | 751 | 60 | 26 |
| **6LM 48/07** | | 1811 | 1000 | 811 | 65 | 30 |
| **6LM 48/08** | | 1942 | 1101 | 841 | 70 | 33 |
| **6LM 48/09** | | 2043 | 1202 | 841 | 70 | 37 |
| **6LM 48/10** | | 2234 | 1303 | 931 | 75 | 41 |
| **6LM 48/11** | | 2395 | 1404 | 991 | 83 | 44 |
| **6LM 48/12** | | 2496 | 1505 | 991 | 83 | 48 |
| **6LM 48/13** | | 2677 | 1606 | 1071 | 92 | 51 |
| **6LM 48/14** | | 2778 | 1707 | 1071 | 92 | 55 |
| **6LM 48/15** | | 2879 | 1808 | 1071 | 92 | 59 |
| **6LM 48/16** | | 3090 | 1909 | 1181 | 100 | 62 |

# 6LM 48

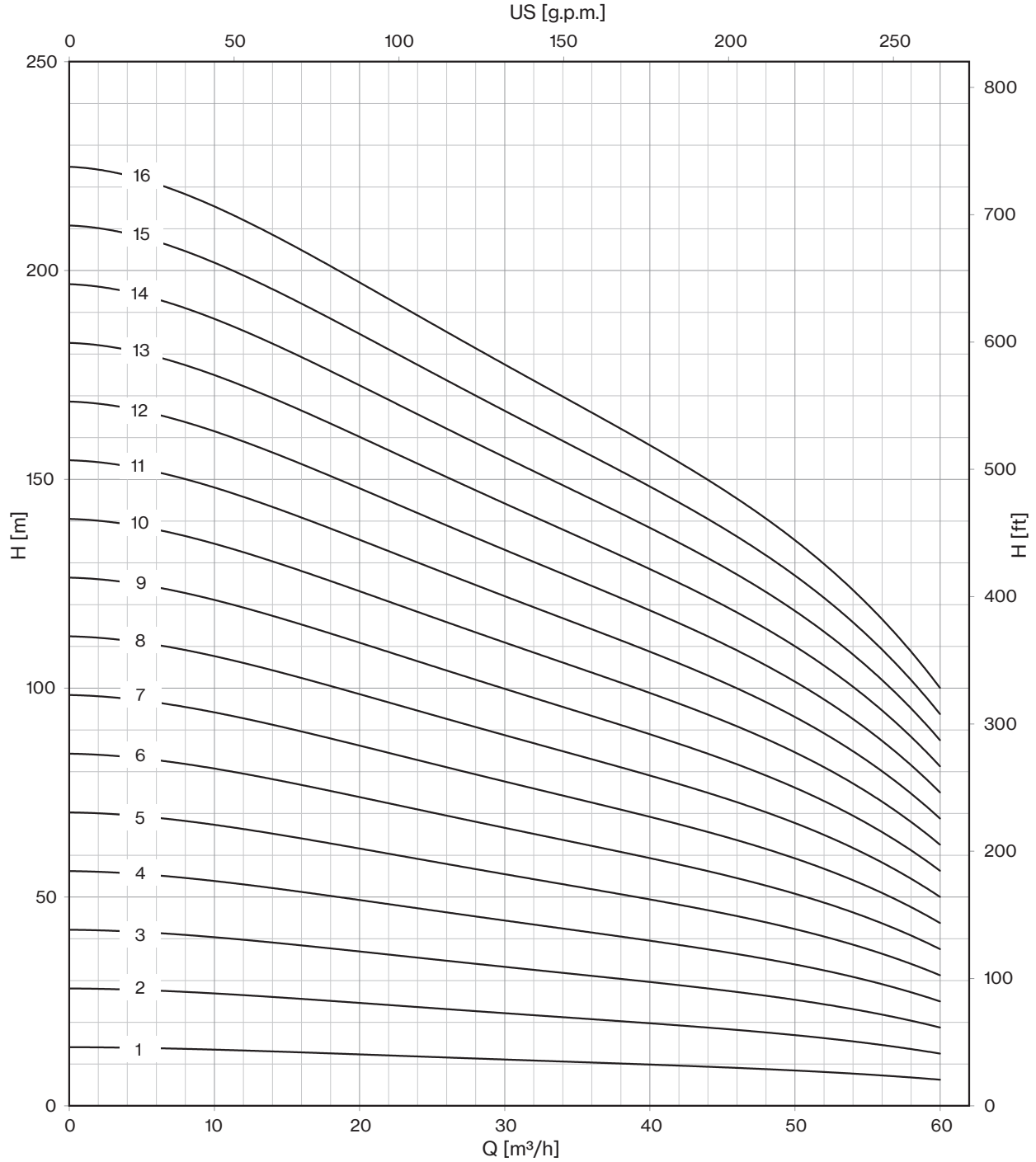


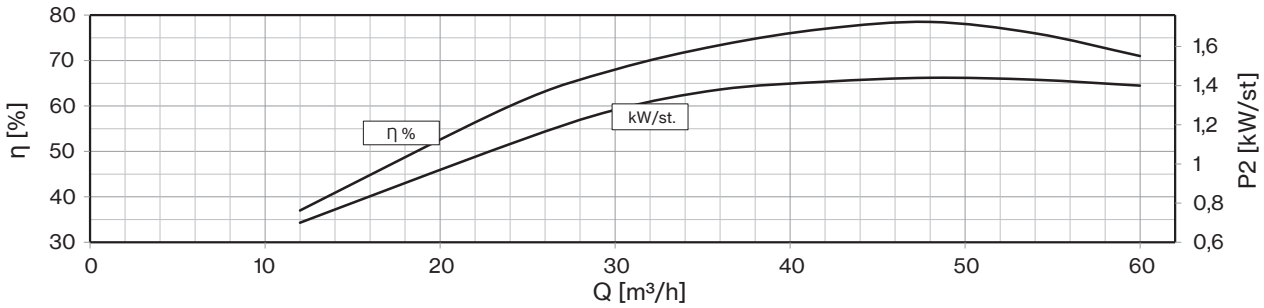




*Drinking water compatibility according DM 174*
*MEI ≥ 0,4 (regulation EU N. 547/2012)*
*Models with less than 3 stages reduce the % eff. of 5%*
*Hydraulic performance according to ISO 9906 grade 3B*

| 50 Hz - 2900 rpm | | | | | Q | | | | | | | | |
|---|---|---|---|---|---|---|---|---|---|---|---|---|---|
| TYPE | SUITABLE MOTOR 3~ 400V | | | l/min | 0 | 200 | 400 | 500 | 600 | 700 | 800 | 900 | 1000 |
| | P2 | | CURRENT | l/sec | 0 | 3,3 | 6,7 | 8,3 | 10,0 | 11,7 | 13,3 | 15,0 | 16,7 |
| | HP | kW | A | m³/h | 0 | 12 | 24 | 30 | 36 | 42 | 48 | 54 | 60 |
| **6LM 48/17** | 35 | 26 | 52,9 | H (m) | 238 | 230 | 194 | 189 | 180 | 167 | 150 | 126 | 109 |
| **6LM 48/18** | 35 | 26 | 52,9 | | 252 | 243 | 205 | 200 | 191 | 176 | 158 | 133 | 115 |
| **6LM 48/19** | 40 | 30 | 61,1 | | 266 | 257 | 217 | 211 | 201 | 186 | 167 | 141 | 122 |
| **6LM 48/20** | 40 | 30 | 61,1 | | 280 | 270 | 228 | 222 | 212 | 196 | 176 | 148 | 128 |
| **6LM 48/21** | 50 | 37 | 75,8 | | 294 | 284 | 239 | 233 | 223 | 206 | 185 | 155 | 134 |
| **6LM 48/22** | 50 | 37 | 75,8 | | 308 | 297 | 251 | 244 | 233 | 216 | 194 | 163 | 141 |
| **6LM 48/23** | 50 | 37 | 75,8 | | 322 | 311 | 262 | 255 | 244 | 225 | 202 | 170 | 147 |
| **6LM 48/24** | 50 | 37 | 75,8 | | 336 | 324 | 274 | 266 | 254 | 235 | 211 | 178 | 154 |
| **6LM 48/25** | 50 | 37 | 75,8 | | 350 | 338 | 285 | 278 | 265 | 245 | 220 | 185 | 160 |
| **6LM 48/26** | 60 | 45 | 86,3 | | 364 | 351 | 296 | 289 | 276 | 255 | 229 | 192 | 166 |
| **6LM 48/27** | 60 | 45 | 86,3 | | 378 | 365 | 308 | 300 | 286 | 265 | 238 | 200 | 173 |
| **6LM 48/28** | 60 | 45 | 86,3 | | 392 | 378 | 319 | 311 | 297 | 274 | 246 | 207 | 179 |
| **6LM 48/29** | 60 | 45 | 86,3 | | 406 | 392 | 331 | 322 | 307 | 284 | 255 | 215 | 186 |
| **6LM 48/30** | 60 | 45 | 86,3 | | 420 | 405 | 342 | 333 | 318 | 294 | 264 | 222 | 192 |

| | |
|---|---|
| **Max Eff. %** | 78,5 |
| **Max kW / St.** | 1,44 |

| **NPSH (m)** | Q=25% | Q=50% | Q=75% | Q=100% |
|---|---|---|---|---|
| | 3,45 | 3,5 | 3,8 | 5 |

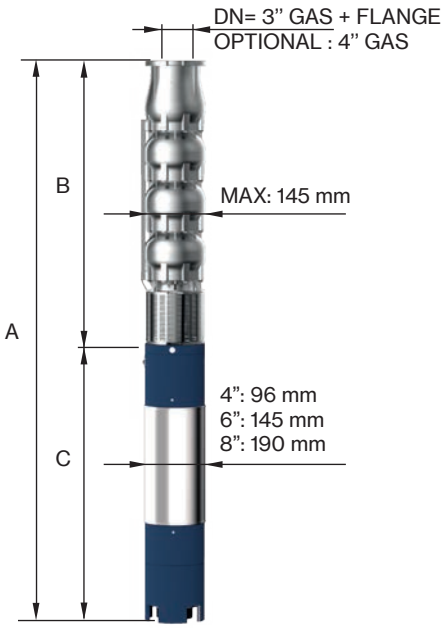


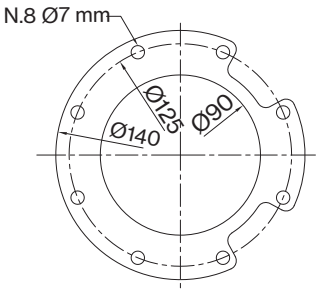


FOR COMMERCIAL TUBE
EXTERNAL DIAMETER: 88,9 mm

| TYPE 3~ | MOTOR BRACKET | DIMENSIONS (mm) | | | WEIGHT (kg) | |
|---|---|---|---|---|---|---|
| | | A | B | C | MOTOR | PUMP |
| **6LM 48/17** | 6" NEMA | 3191 | 2010 | 1181 | 100 | 66 |
| **6LM 48/18** | | 3292 | 2111 | 1181 | 100 | 69 |
| **6LM 48/19** | | 3463 | 2212 | 1251 | 108 | 73 |
| **6LM 48/20** | | 3564 | 2313 | 1251 | 108 | 77 |
| **6LM 48/21** | | 3755 | 2414 | 1341 | 118 | 80 |
| **6LM 48/22** | | 3856 | 2515 | 1341 | 118 | 84 |
| **6LM 48/23** | | 3957 | 2616 | 1341 | 118 | 87 |
| **6LM 48/24** | | 4058 | 2717 | 1341 | 118 | 91 |
| **6LM 48/25** | | 4159 | 2818 | 1341 | 118 | 95 |
| **6LM 48/26** | | 4109 | 2986 | 1123 | 178 | 102 |
| **6LM 48/27** | | 4210 | 3087 | 1123 | 178 | 106 |
| **6LM 48/28** | | 4311 | 3188 | 1123 | 178 | 109 |
| **6LM 48/29** | | 4412 | 3289 | 1123 | 178 | 113 |
| **6LM 48/30** | | 4513 | 3390 | 1123 | 178 | 116 |

# 6LM 48

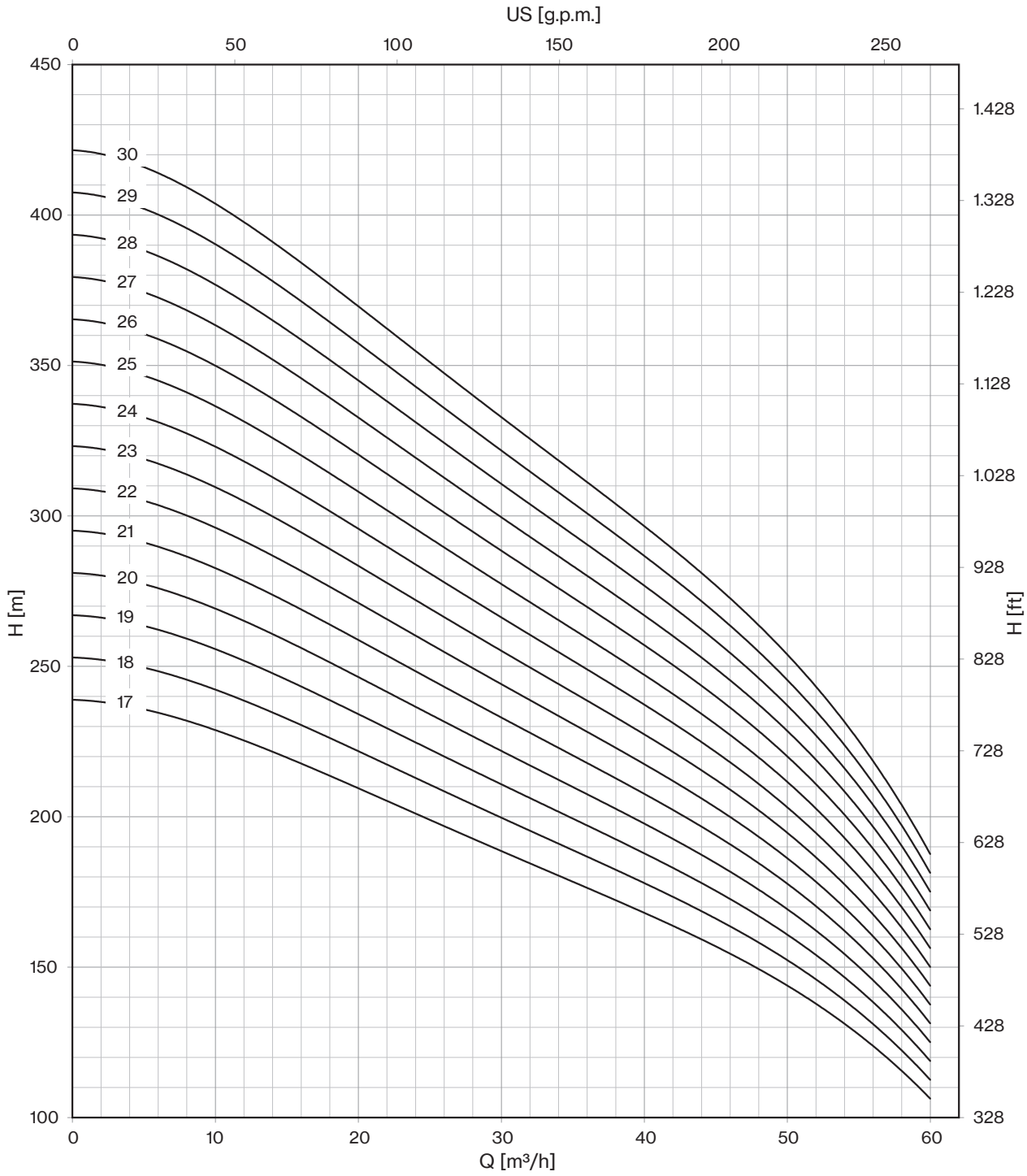


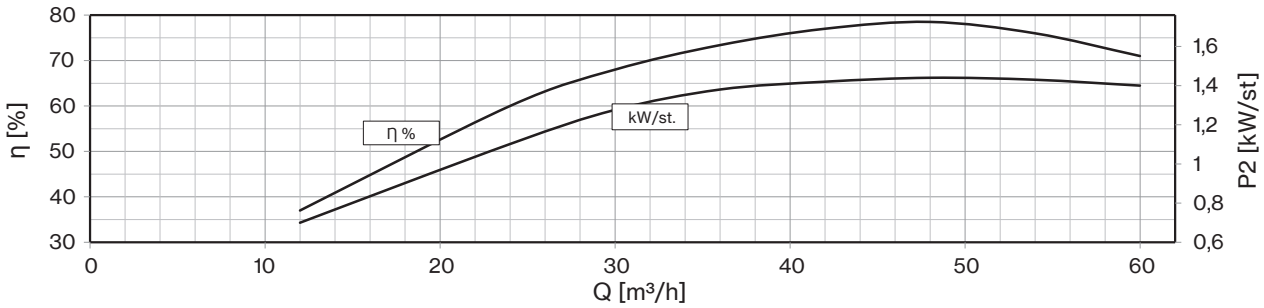




*Drinking water compatibility according DM 174*
*MEI ≥ 0,4 (regulation EU N. 547/2012)*
*Models with less than 3 stages reduce the % eff. of 5%*
*Hydraulic performance according to ISO 9906 grade 3B*

| 50 Hz - 2900 rpm | | | | | Q | | | | | | | | |
|---|---|---|---|---|---|---|---|---|---|---|---|---|---|
| TYPE | SUITABLE MOTOR 3~ 400V | | | l/min | 0 | 300 | 600 | 700 | 800 | 900 | 1000 | 1100 | 1200 |
| | P2 | | CURRENT | l/sec | 0 | 5,0 | 10,0 | 11,7 | 13,3 | 15,0 | 16,7 | 18,3 | 20,0 |
| | HP | kW | A | m³/h | 0 | 18 | 36 | 42 | 48 | 54 | 60 | 66 | 72 |
| **6LM 60/01** | 3 | 2 | 5,50 | H (m) | 14 | 12 | 10 | 10 | 9 | 9 | 8 | 7 | 6 |
| **6LM 60/02** | 5,5 | 4 | 10,00 | | 27 | 25 | 21 | 19 | 18 | 17 | 16 | 14 | 12 |
| **6LM 60/03** | 7,5 | 5,5 | 12,50 | | 41 | 37 | 31 | 29 | 27 | 26 | 23 | 21 | 18 |
| **6LM 60/04** | 10 | 7,5 | 16,30 | | 55 | 49 | 41 | 38 | 36 | 34 | 31 | 28 | 24 |
| **6LM 60/05** | 12,5 | 9,2 | 19,90 | | 69 | 62 | 52 | 48 | 46 | 43 | 39 | 35 | 30 |
| **6LM 60/06** | 15 | 11 | 23,40 | | 82 | 74 | 62 | 58 | 55 | 51 | 47 | 41 | 36 |
| **6LM 60/07** | 17,5 | 13 | 27,30 | | 96 | 86 | 72 | 67 | 64 | 60 | 55 | 48 | 42 |
| **6LM 60/08** | 20 | 15 | 31,50 | | 110 | 98 | 82 | 77 | 73 | 68 | 62 | 55 | 48 |
| **6LM 60/09** | 20 | 15 | 31,50 | | 123 | 111 | 93 | 86 | 82 | 77 | 70 | 62 | 54 |
| **6LM 60/10** | 25 | 18,5 | 38,30 | | 137 | 123 | 103 | 96 | 91 | 85 | 78 | 69 | 60 |
| **6LM 60/11** | 25 | 18,5 | 38,30 | | 151 | 135 | 113 | 106 | 100 | 94 | 86 | 76 | 66 |
| **6LM 60/12** | 30 | 22 | 45,10 | | 164 | 148 | 124 | 115 | 109 | 102 | 94 | 83 | 72 |
| **6LM 60/13** | 30 | 22 | 45,10 | | 178 | 160 | 134 | 125 | 118 | 111 | 101 | 90 | 78 |
| **6LM 60/14** | 35 | 26 | 52,90 | | 192 | 172 | 144 | 134 | 127 | 119 | 109 | 97 | 84 |
| **6LM 60/15** | 35 | 26 | 52,90 | | 206 | 185 | 155 | 144 | 137 | 128 | 117 | 104 | 90 |
| **6LM 60/16** | 40 | 30 | 61,10 | | 219 | 197 | 165 | 154 | 146 | 136 | 125 | 110 | 96 |

| | |
|---|---|
| **Max Eff. %** | 77 |
| **Max kW / St.** | 1,65 |

| **NPSH (m)** | Q=25% | Q=50% | Q=75% | Q=100% |
|---|---|---|---|---|
| | 3,8 | 3,8 | 5,1 | 7,1 |

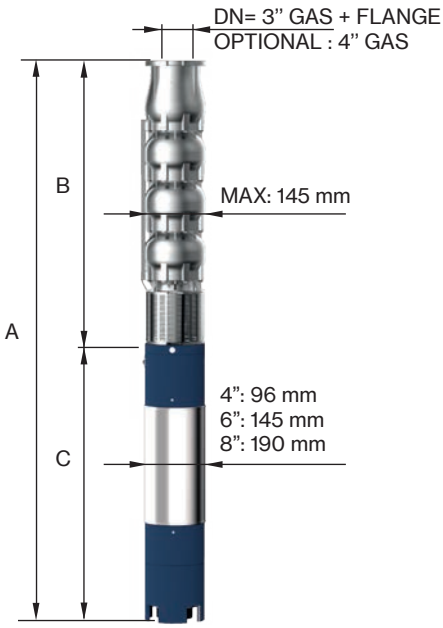


| TYPE 3~ | MOTOR BRACKET | DIMENSIONS (mm) | | | WEIGHT (kg) | |
|---|---|---|---|---|---|---|
| | | A | B | C | MOTOR | PUMP |
| **6LM 60/01-4** | 4" NEMA | 812 | 360 | 452 | 15 | 8 |
| **6LM 60/02-4** | | 1064 | 467 | 597 | 22 | 12 |
| **6LM 60/03-4** | | 1272 | 574 | 698 | 27 | 16 |
| **6LM 60/04** | 6" NEMA | 1422 | 721 | 701 | 55 | 20 |
| **6LM 60/05** | | 1579 | 828 | 751 | 60 | 24 |
| **6LM 60/06** | | 1746 | 935 | 811 | 65 | 27 |
| **6LM 60/07** | | 1883 | 1042 | 841 | 70 | 31 |
| **6LM 60/08** | | 2080 | 1149 | 931 | 75 | 35 |
| **6LM 60/09** | | 2187 | 1256 | 931 | 75 | 39 |
| **6LM 60/10** | | 2354 | 1363 | 991 | 83 | 43 |
| **6LM 60/11** | | 2461 | 1470 | 991 | 83 | 46 |
| **6LM 60/12** | | 2648 | 1577 | 1071 | 92 | 50 |
| **6LM 60/13** | | 2755 | 1684 | 1071 | 92 | 54 |
| **6LM 60/14** | | 2972 | 1791 | 1181 | 100 | 58 |
| **6LM 60/15** | | 3079 | 1898 | 1181 | 100 | 62 |
| **6LM 60/16** | | 3256 | 2005 | 1251 | 108 | 65 |

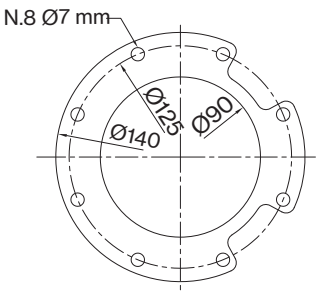


FOR COMMERCIAL TUBE
EXTERNAL DIAMETER: 88,9 mm

# 6LM 60

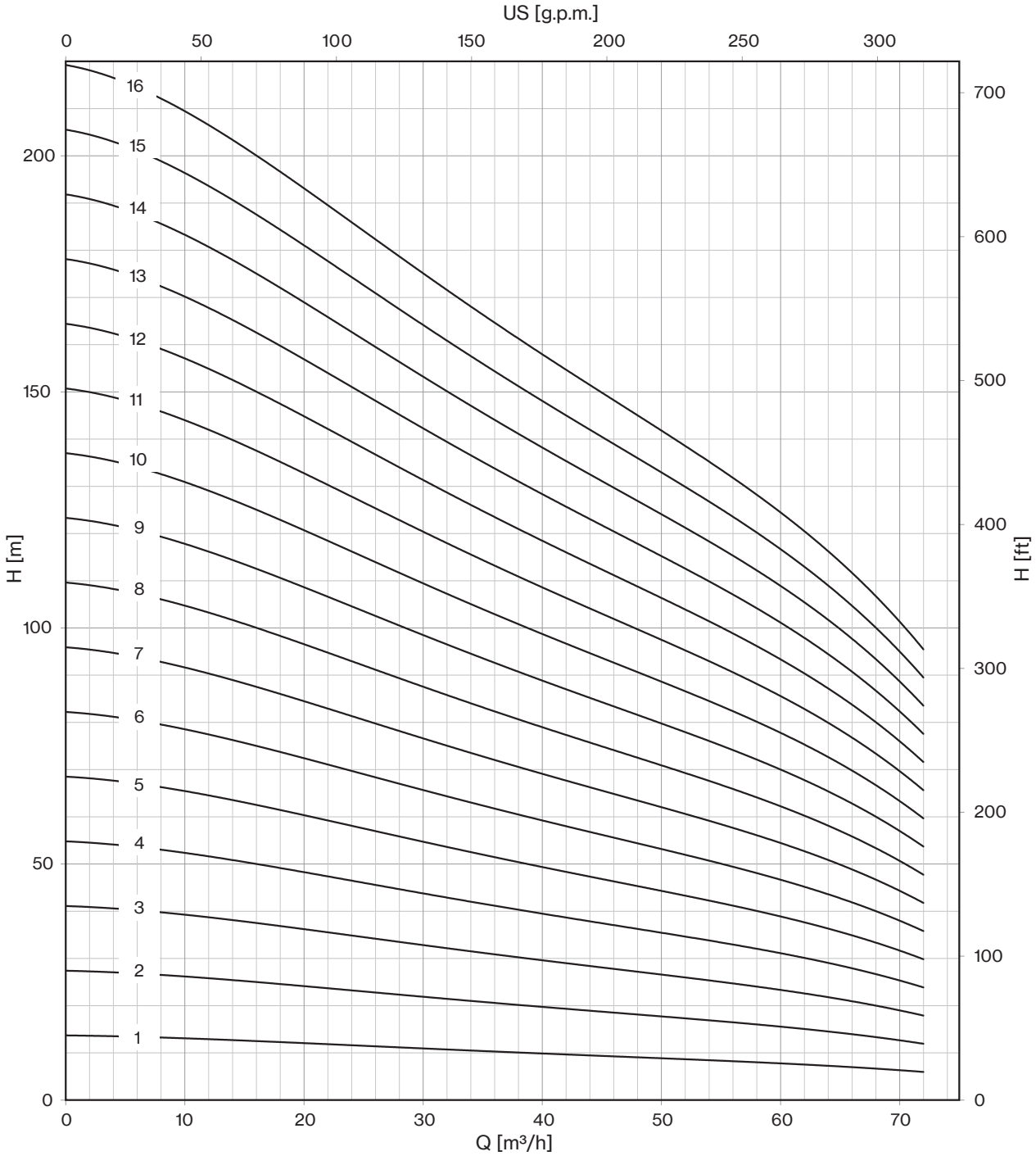


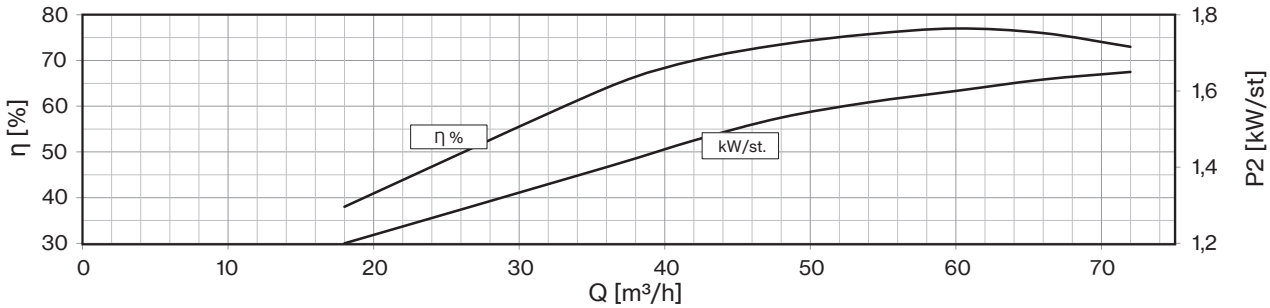




*Drinking water compatibility according DM 174*
*MEI ≥ 0,4 (regulation EU N. 547/2012)*
*Models with less than 3 stages reduce the % eff. of 5%*
*Hydraulic performance according to ISO 9906 grade 3B*

| 50 Hz - 2900 rpm | | | | | Q | | | | | | | | |
|---|---|---|---|---|---|---|---|---|---|---|---|---|---|
| TYPE | SUITABLE MOTOR 3~ 400V | | | l/min | 0 | 300 | 600 | 700 | 800 | 900 | 1000 | 1100 | 1200 |
| | P2 | | CURRENT | l/sec | 0 | 5,0 | 10,0 | 11,7 | 13,3 | 15,0 | 16,7 | 18,3 | 20,0 |
| | HP | kW | A | m³/h | 0 | 18 | 36 | 42 | 48 | 54 | 60 | 66 | 72 |
| **6LM 60/17** | 40 | 30 | 61,1 | H (m) | 233 | 209 | 175 | 163 | 155 | 145 | 133 | 117 | 102 |
| **6LM 60/18** | 40 | 30 | 61,1 | | 247 | 221 | 185 | 173 | 164 | 153 | 140 | 124 | 108 |
| **6LM 60/19** | 50 | 37 | 75,8 | | 260 | 234 | 196 | 182 | 173 | 162 | 148 | 131 | 114 |
| **6LM 60/20** | 50 | 37 | 75,8 | | 274 | 246 | 206 | 192 | 182 | 170 | 156 | 138 | 120 |
| **6LM 60/21** | 50 | 37 | 75,8 | | 288 | 258 | 216 | 202 | 191 | 179 | 164 | 145 | 126 |
| **6LM 60/22** | 50 | 37 | 75,8 | | 301 | 271 | 227 | 211 | 200 | 187 | 172 | 152 | 132 |
| **6LM 60/23** | 60 | 45 | 86,3 | | 315 | 283 | 237 | 221 | 209 | 196 | 179 | 159 | 138 |
| **6LM 60/24** | 60 | 45 | 86,3 | | 329 | 295 | 247 | 230 | 218 | 204 | 187 | 166 | 144 |
| **6LM 60/25** | 60 | 45 | 86,3 | | 343 | 308 | 258 | 240 | 228 | 213 | 195 | 173 | 150 |
| **6LM 60/26** | 60 | 45 | 86,3 | | 356 | 320 | 268 | 250 | 237 | 221 | 203 | 179 | 156 |
| **6LM 60/27** | 60 | 45 | 86,3 | | 370 | 332 | 278 | 259 | 246 | 230 | 211 | 186 | 162 |
| **6LM 60/28** | 75 | 55 | 106,2 | | 384 | 344 | 288 | 269 | 255 | 238 | 218 | 193 | 168 |
| **6LM 60/29** | 75 | 55 | 106,2 | | 397 | 357 | 299 | 278 | 264 | 247 | 226 | 200 | 174 |
| **6LM 60/30** | 75 | 55 | 106,2 | | 411 | 369 | 309 | 288 | 273 | 255 | 234 | 207 | 180 |
| **6LM 60/31** | 75 | 55 | 106,2 | | 425 | 381 | 319 | 298 | 282 | 264 | 242 | 214 | 186 |
| **6LM 60/32** | 75 | 55 | 106,2 | | 438 | 394 | 330 | 307 | 291 | 272 | 250 | 221 | 192 |
| **6LM 60/33** | 75 | 55 | 106,2 | | 452 | 406 | 340 | 317 | 300 | 281 | 257 | 228 | 198 |

| | |
|---|---|
| **Max Eff. %** | 77 |
| **Max kW / St.** | 1,65 |

| **NPSH (m)** | Q=25% | Q=50% | Q=75% | Q=100% |
|---|---|---|---|---|
| | 3,8 | 3,8 | 5,1 | 7,1 |

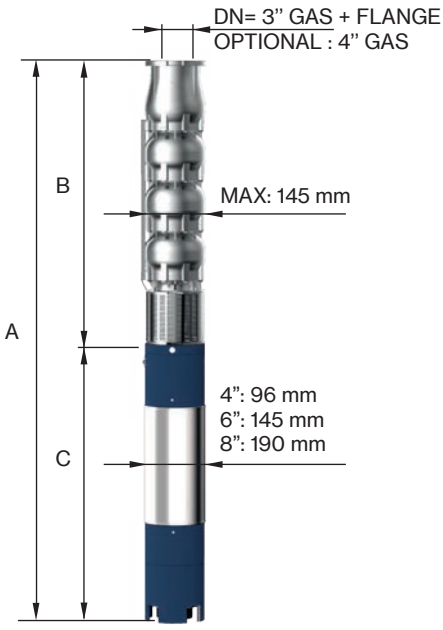


| TYPE 3~ | MOTOR BRACKET | DIMENSIONS (mm) | | | WEIGHT (kg) | |
|---|---|---|---|---|---|---|
| | | A | B | C | MOTOR | PUMP |
| **6LM 60/17** | 6" NEMA | 3363 | 2112 | 1251 | 108 | 69 |
| **6LM 60/18** | | 3470 | 2219 | 1251 | 108 | 73 |
| **6LM 60/19** | | 3667 | 2326 | 1341 | 118 | 77 |
| **6LM 60/20** | | 3774 | 2433 | 1341 | 118 | 81 |
| **6LM 60/21** | | 3881 | 2540 | 1341 | 118 | 84 |
| **6LM 60/22** | | 3988 | 2647 | 1341 | 118 | 88 |
| **6LM 60/23** | | 3944 | 2821 | 1123 | 178 | 96 |
| **6LM 60/24** | | 4051 | 2928 | 1123 | 178 | 100 |
| **6LM 60/25** | | 4158 | 3035 | 1123 | 178 | 103 |
| **6LM 60/26** | | 4265 | 3142 | 1123 | 178 | 107 |
| **6LM 60/27** | | 4372 | 3249 | 1123 | 178 | 111 |
| **6LM 60/28** | | 4589 | 3356 | 1233 | 200 | 115 |
| **6LM 60/29** | | 4696 | 3463 | 1233 | 200 | 119 |
| **6LM 60/30** | | 4803 | 3570 | 1233 | 200 | 122 |
| **6LM 60/31** | | 4910 | 3677 | 1233 | 200 | 126 |
| **6LM 60/32** | | 5017 | 3784 | 1233 | 200 | 130 |
| **6LM 60/33** | | 5124 | 3891 | 1233 | 200 | 134 |

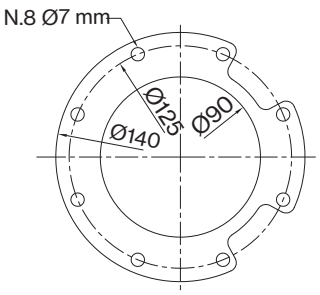


FOR COMMERCIAL TUBE
EXTERNAL DIAMETER: 88,9 mm

# 6LM 60

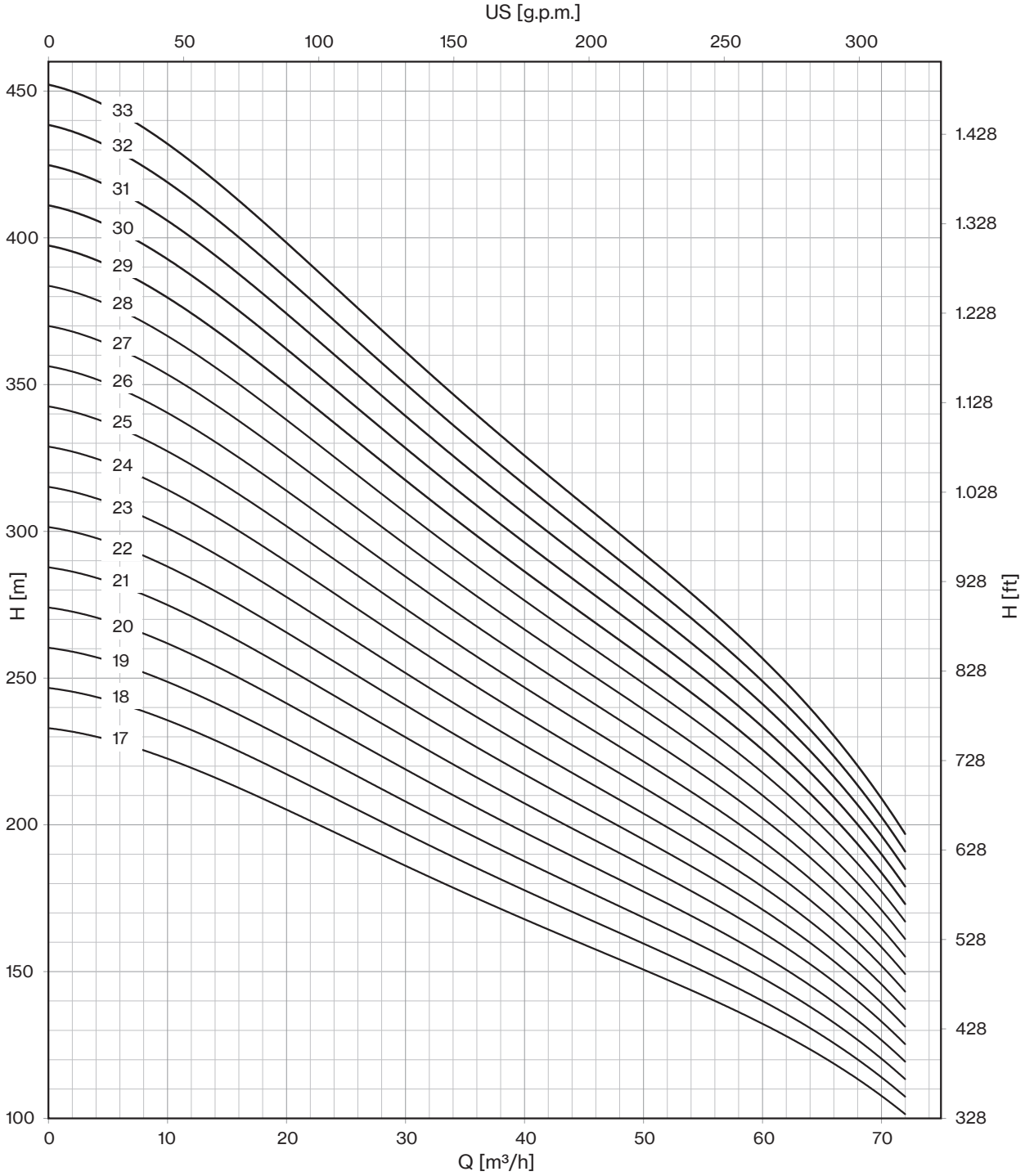


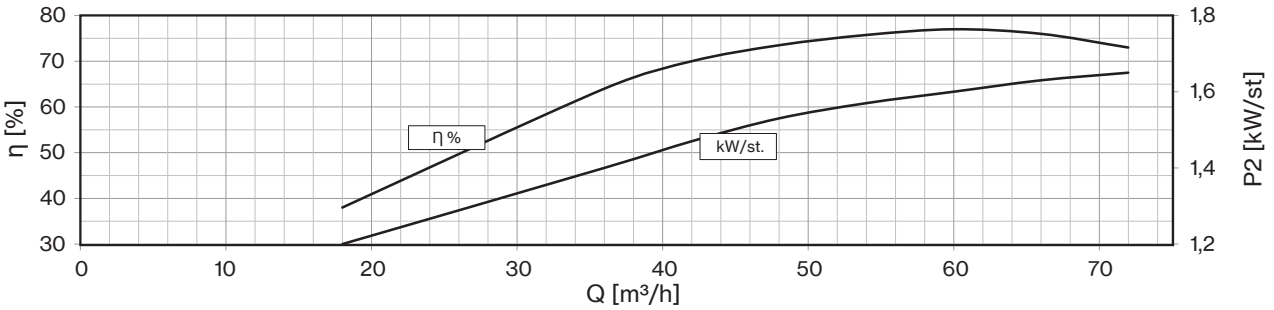




*Drinking water compatibility according DM 174*
*MEI ≥ 0,4 (regulation EU N. 547/2012)*
*Models with less than 3 stages reduce the % eff. of 5%*
*Hydraulic performance according to ISO 9906 grade 3B*

| 50 Hz - 2900 rpm | | | | | Q | | | | | | | | |
|---|---|---|---|---|---|---|---|---|---|---|---|---|---|
| TYPE | SUITABLE MOTOR 3~ 400V | | | l/min | 0 | 300 | 900 | 1000 | 1100 | 1200 | 1300 | 1400 | 1500 |
| | P2 | | CURRENT | l/sec | 0 | 5,0 | 15,0 | 16,7 | 18,3 | 20,0 | 21,7 | 23,3 | 25,0 |
| | HP | kW | A | m³/h | 0 | 18 | 54 | 60 | 66 | 72 | 78 | 84 | 90 |
| **6LM 70/01** | 3 | 2,2 | 5,5 | H (m) | 13 | 12 | 10 | 9 | 9 | 9 | 8 | 7 | 6 |
| **6LM 70/02** | 7,5 | 5,5 | 12,5 | | 26 | 24 | 19 | 19 | 18 | 17 | 15 | 13 | 11 |
| **6LM 70/03** | 10 | 7,5 | 16,3 | | 39 | 36 | 29 | 28 | 27 | 26 | 23 | 20 | 17 |
| **6LM 70/04** | 12,5 | 9,2 | 19,9 | | 52 | 48 | 38 | 38 | 36 | 34 | 30 | 26 | 22 |
| **6LM 70/05** | 15 | 11 | 23,4 | | 66 | 61 | 48 | 47 | 46 | 43 | 38 | 33 | 28 |
| **6LM 70/06** | 20 | 15 | 31,5 | | 79 | 73 | 57 | 56 | 55 | 51 | 46 | 40 | 34 |
| **6LM 70/07** | 25 | 18,5 | 38,3 | | 92 | 85 | 67 | 66 | 64 | 60 | 53 | 46 | 39 |
| **6LM 70/08** | 25 | 18,5 | 38,3 | | 105 | 97 | 76 | 75 | 73 | 68 | 61 | 53 | 45 |
| **6LM 70/09** | 30 | 22 | 45,1 | | 118 | 109 | 86 | 85 | 82 | 77 | 68 | 59 | 50 |
| **6LM 70/10** | 30 | 22 | 45,1 | | 131 | 121 | 96 | 94 | 91 | 85 | 76 | 66 | 56 |
| **6LM 70/11** | 35 | 26 | 52,9 | | 144 | 133 | 105 | 103 | 100 | 94 | 84 | 73 | 62 |
| **6LM 70/12** | 40 | 30 | 61,1 | | 157 | 145 | 115 | 113 | 109 | 102 | 91 | 79 | 67 |
| **6LM 70/13** | 40 | 30 | 61,1 | | 170 | 157 | 124 | 122 | 118 | 111 | 99 | 86 | 73 |

| | |
|---|---|
| **Max Eff. %** | 76 |
| **Max kW / St.** | 2,18 |

| **NPSH (m)** | Q=25% | Q=50% | Q=75% | Q=100% |
|---|---|---|---|---|
| | 3,8 | 3,8 | 5,1 | 7,1 |

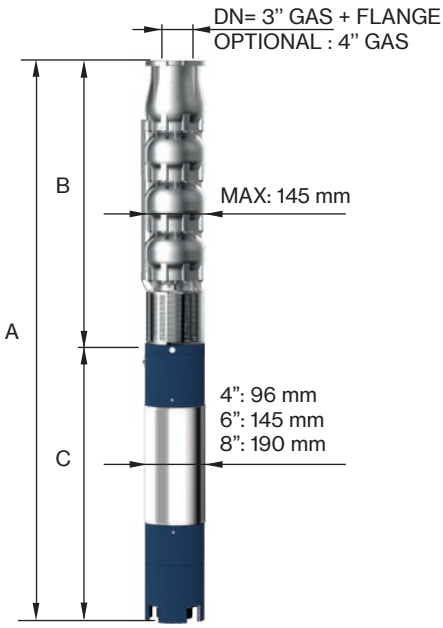


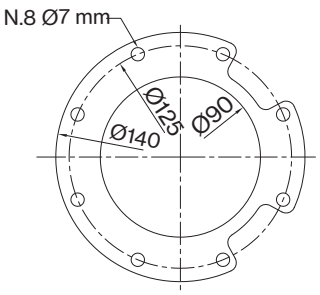


FOR COMMERCIAL TUBE
EXTERNAL DIAMETER: 88,9 mm

| TYPE 3~ | MOTOR BRACKET | DIMENSIONS (mm) | | | WEIGHT (kg) | |
|---|---|---|---|---|---|---|
| | | A | B | C | MOTOR | PUMP |
| **6LM 70/01-4** | 4" NEMA | 812 | 360 | 452 | 15 | 8 |
| **6LM 70/02-4** | | 1165 | 467 | 698 | 27 | 12 |
| **6LM 70/03** | 6" NEMA | 1315 | 614 | 701 | 55 | 16 |
| **6LM 70/04** | | 1472 | 721 | 751 | 60 | 20 |
| **6LM 70/05** | | 1639 | 828 | 811 | 65 | 24 |
| **6LM 70/06** | | 1866 | 935 | 931 | 75 | 27 |
| **6LM 70/07** | | 2033 | 1042 | 991 | 83 | 31 |
| **6LM 70/08** | | 2140 | 1149 | 991 | 83 | 35 |
| **6LM 70/09** | | 2327 | 1256 | 1071 | 92 | 39 |
| **6LM 70/10** | | 2434 | 1363 | 1071 | 92 | 43 |
| **6LM 70/11** | | 2651 | 1470 | 1181 | 100 | 46 |
| **6LM 70/12** | | 2828 | 1577 | 1251 | 108 | 50 |
| **6LM 70/13** | | 2935 | 1684 | 1251 | 108 | 54 |

# 6LM 70

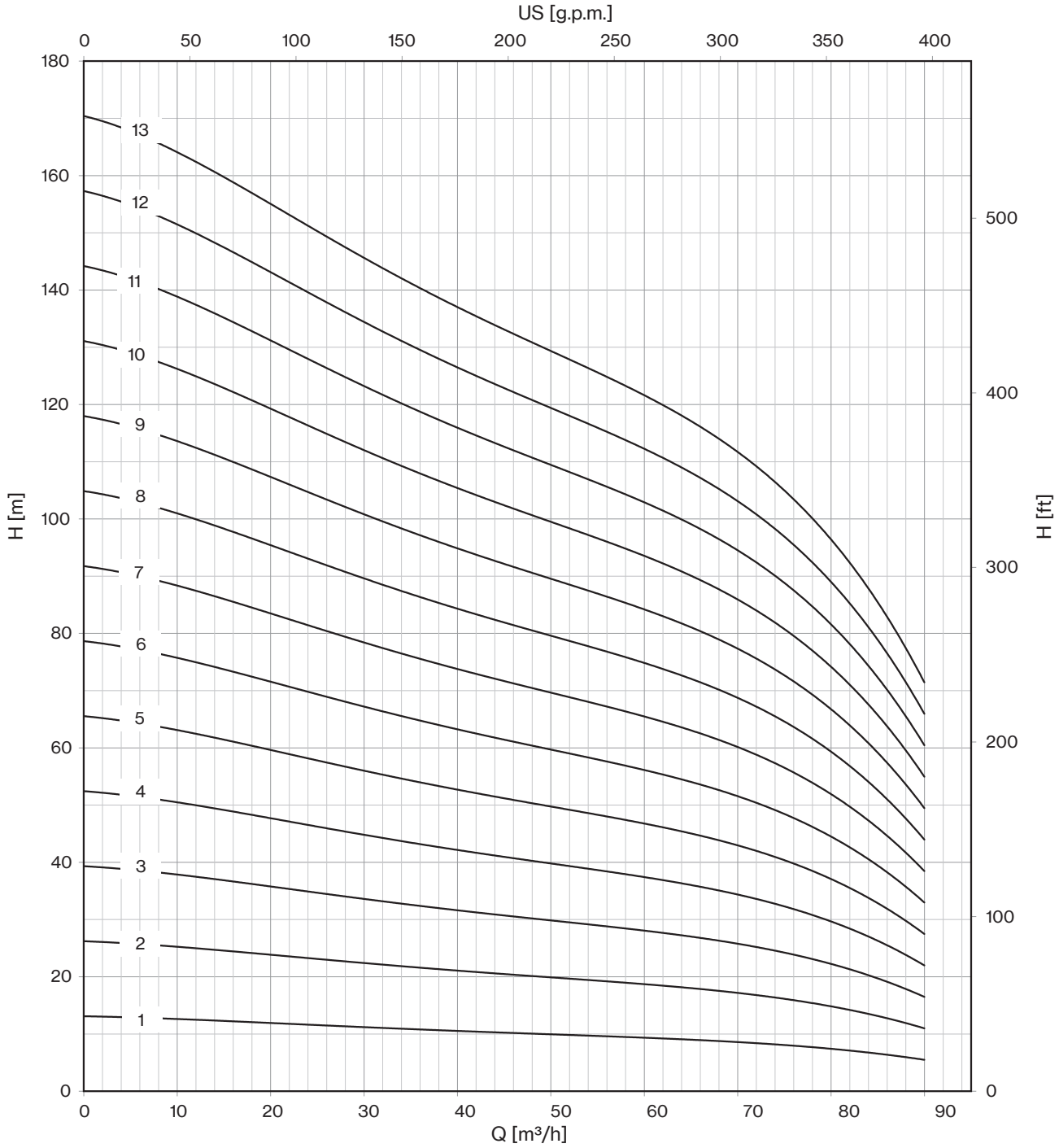


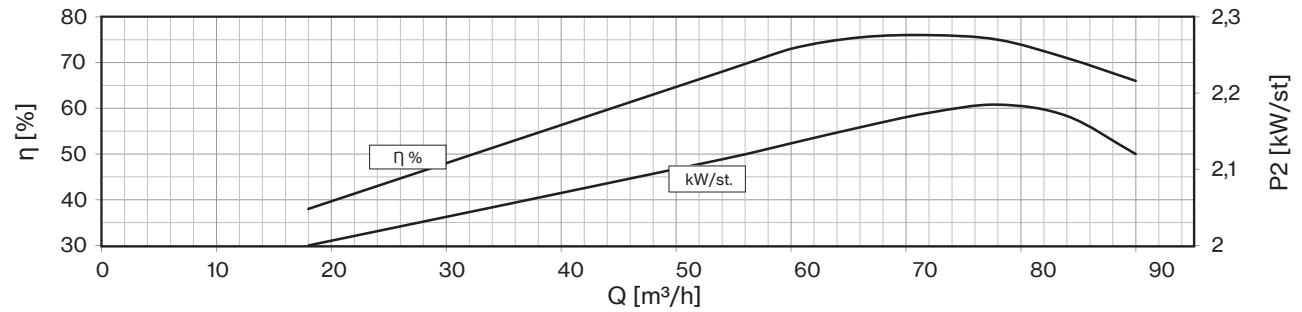




*Drinking water compatibility according DM 174*
*MEI ≥ 0,4 (regulation EU N. 547/2012)*
*Models with less than 3 stages reduce the % eff. of 5%*
*Hydraulic performance according to ISO 9906 grade 3B*

| 50 Hz - 2900 rpm | | | | | Q | | | | | | | | |
|---|---|---|---|---|---|---|---|---|---|---|---|---|---|
| TYPE | SUITABLE MOTOR 3~ 400V | | | l/min | 0 | 300 | 900 | 1000 | 1100 | 1200 | 1300 | 1400 | 1500 |
| | P2 | | CURRENT | l/sec | 0 | 5,0 | 15,0 | 16,7 | 18,3 | 20,0 | 21,7 | 23,3 | 25,0 |
| | HP | kW | A | m³/h | 0 | 18 | 54 | 60 | 66 | 72 | 78 | 84 | 90 |
| **6LM 70/14** | 50 | 37 | 75,8 | H (m) | 183 | 169 | 134 | 132 | 127 | 119 | 106 | 92 | 78 |
| **6LM 70/15** | 50 | 37 | 75,8 | | 197 | 182 | 143 | 141 | 137 | 128 | 114 | 99 | 84 |
| **6LM 70/16** | 50 | 37 | 75,8 | | 210 | 194 | 153 | 150 | 146 | 136 | 122 | 106 | 90 |
| **6LM 70/17** | 60 | 45 | 86,3 | | 223 | 206 | 162 | 160 | 155 | 145 | 129 | 112 | 95 |
| **6LM 70/18** | 60 | 45 | 86,3 | | 236 | 218 | 172 | 169 | 164 | 153 | 137 | 119 | 101 |
| **6LM 70/19** | 60 | 45 | 86,3 | | 249 | 230 | 181 | 179 | 173 | 162 | 144 | 125 | 106 |
| **6LM 70/20** | 60 | 45 | 86,3 | | 262 | 242 | 191 | 188 | 182 | 170 | 152 | 132 | 112 |
| **6LM 70/21** | 75 | 55 | 106,2 | | 275 | 254 | 201 | 197 | 191 | 179 | 160 | 139 | 118 |
| **6LM 70/22** | 75 | 55 | 106,2 | | 288 | 266 | 210 | 207 | 200 | 187 | 167 | 145 | 123 |
| **6LM 70/23** | 75 | 55 | 106,2 | | 301 | 278 | 220 | 216 | 209 | 196 | 175 | 152 | 129 |
| **6LM 70/24** | 75 | 55 | 106,2 | | 314 | 290 | 229 | 226 | 218 | 204 | 182 | 158 | 134 |
| **6LM 70/25** | 75 | 55 | 106,2 | | 328 | 303 | 239 | 235 | 228 | 213 | 190 | 165 | 140 |

| | |
|---|---|
| **Max Eff. %** | 76 |
| **Max kW / St.** | 2,18 |

| **NPSH (m)** | Q=25% | Q=50% | Q=75% | Q=100% |
|---|---|---|---|---|
| | 3,8 | 3,8 | 5,1 | 7,1 |

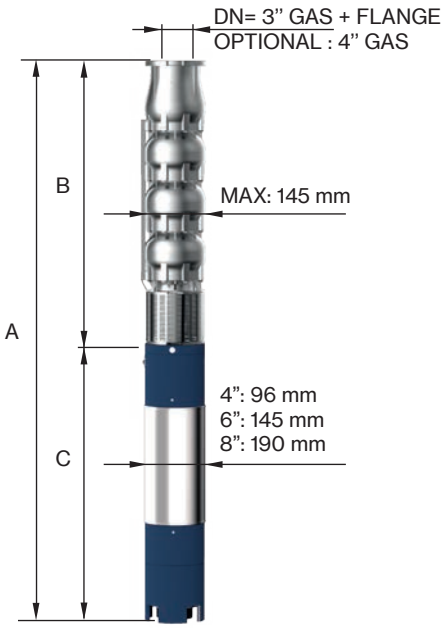


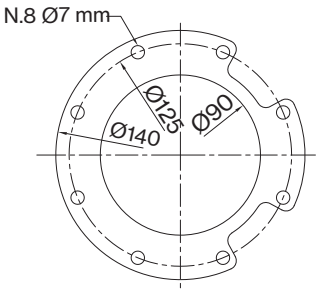


FOR COMMERCIAL TUBE
EXTERNAL DIAMETER: 88,9 mm

| TYPE 3~ | MOTOR BRACKET | DIMENSIONS (mm) | | | WEIGHT (kg) | |
|---|---|---|---|---|---|---|
| | | A | B | C | MOTOR | PUMP |
| **6LM 70/14** | 6" NEMA | 3132 | 1791 | 1341 | 118 | 58 |
| **6LM 70/15** | | 3239 | 1898 | 1341 | 118 | 62 |
| **6LM 70/16** | | 3346 | 2005 | 1341 | 118 | 65 |
| **6LM 70/17** | | 3235 | 2112 | 1123 | 178 | 69 |
| **6LM 70/18** | | 3342 | 2219 | 1123 | 178 | 73 |
| **6LM 70/19** | | 3516 | 2393 | 1123 | 178 | 81 |
| **6LM 70/20** | | 3623 | 2500 | 1123 | 178 | 84 |
| **6LM 70/21** | | 3840 | 2607 | 1233 | 200 | 88 |
| **6LM 70/22** | | 3947 | 2714 | 1233 | 200 | 92 |
| **6LM 70/23** | | 4054 | 2821 | 1233 | 200 | 96 |
| **6LM 70/24** | | 4161 | 2928 | 1233 | 200 | 100 |
| **6LM 70/25** | | 4268 | 3035 | 1233 | 200 | 103 |

# 6LM 70

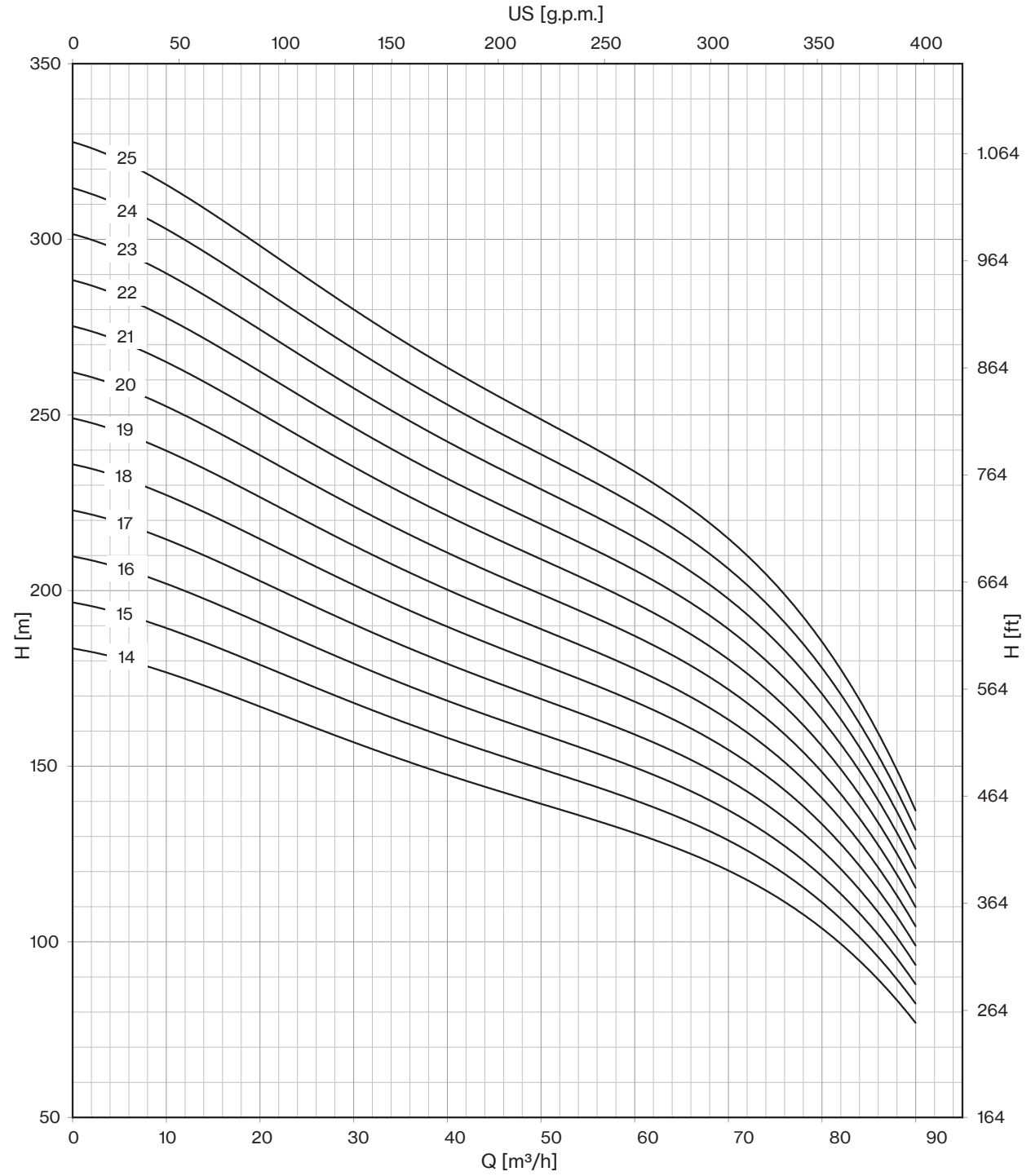


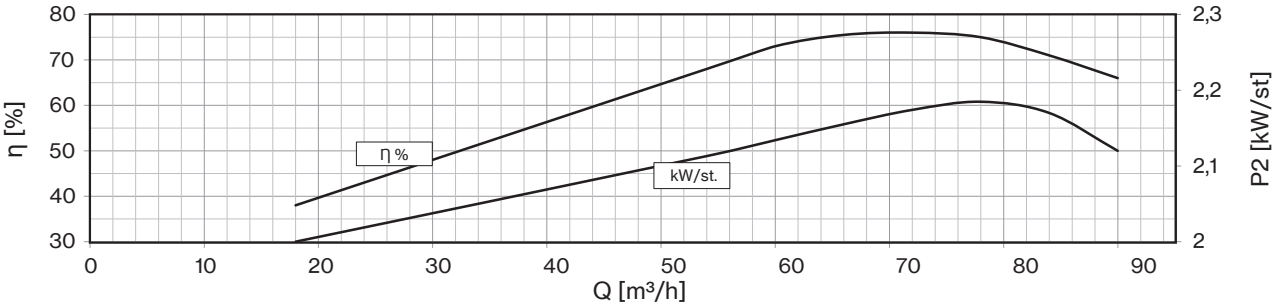




*Drinking water compatibility according DM 174*
*MEI ≥ 0,4 (regulation EU N. 547/2012)*
*Models with less than 3 stages reduce the % eff. of 5%*
*Hydraulic performance according to ISO 9906 grade 3B*

# 8LRH & 8LM lines

## Submersible Well Pumps

Submersible Multistage Centrifugal Pumps for 8” Wells.
The 8LRH line is a radial type execution, while the 8LM one is a semi-axial type. These pumps feature a check valve integrated into the delivery outlet. The pump motor bracket and coupling are manufactured in compliance with NEMA standards. All components are constructed from stainless steel using lost wax microfusion technology. The standard material is AISI 304 stainless steel. Alternatively, the following materials are available upon request: AISI 316 stainless steel and Duplex steel (EN 1.4462). The bushing bearings and wear rings are made from sand abrasion-resistant rubber, while the reverse-thrust ring is made of PTFE/ Graphite. These pumps are suitable for a wide range of applications, including civil and agricultural uses.

**General operating data:**

- Capacity up to 192 m³/h
- Pressure up to 719 m
- Hydraulic efficiency 8’’, up to 78,5%
- Powers up to 185 kW
- Rotation speed 2.900 rpm
- Maximum depth: 350 m
- Maximum quantity of sand: 100 gr/m³
- Drinking water compatibility according to DM174
- MEI ≥ 0,4 (EU directive No.547/2012)
- Performance tolerance: ISO9906-3B

### Construction features

| | |
|---|---|
| **Suction and delivery outlet** | stainless steel AISI 304 (LRHS-LMS)<br>stainless steel AISI 316 (LRHX-LMX)<br>Duplex EN 1.4462 (LRHD-LMD) |
| **Valve** | stainless steel AISI 304 (LRHS-LMS)<br>stainless steel AISI 316 (LRHX-LMX)<br>Duplex EN 1.4462 (LRHD-LMD) |
| **Impellers and diffusers** | stainless steel AISI 304 (LRHS-LMS)<br>stainless steel AISI 316 (LRHX-LMX)<br>Duplex EN 1.4462 (LRHD-LMD) |
| **Upper bushings** | NBR rubber |
| **Shaft pump side** | stainless steel AISI 304 (LRS-LMS)<br>stainless steel AISI 316 (LRX-LMX)<br>Duplex EN 1.4462 (LRD-LMD) |
| **Quantity of sand in the water** | max 100 gr/m3 |

### Motor

| | |
|---|---|
| **Asynchronous 2 pole** | rewindable water cooled |
| **Insulation class** | Y (max 30 °C) - PPC winding type<br>F (max 50 °C) - PE2+PA or LPE winding type |
| **Protection degree** | IP68 |
| **Liquid temperature** | max 30 °C (max 50 °C on request) |
| **Depth of immersion** | max 350 m |

8LRH line

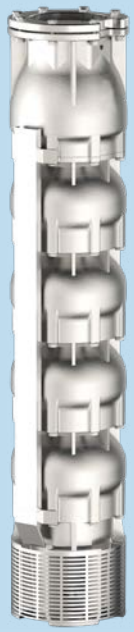

8LM line

# 8LRH 34

| 50 Hz - 2900 rpm | | | | | Q | | | | | | |
|---|---|---|---|---|---|---|---|---|---|---|---|
| TYPE | SUITABLE MOTOR 3~ 400V | | | l/min | 0 | 200 | 300 | 400 | 500 | 600 | 700 |
| | P2 | | CURRENT | l/sec | 0,0 | 3,3 | 5,0 | 6,7 | 8,3 | 10,0 | 11,7 |
| | HP | kW | A | m³/h | 0 | 12 | 18 | 24 | 30 | 36 | 42 |
| **8LRH 34/01** | 5,5 | 4 | 9,1 | H (m) | 23 | 22 | 21 | 20 | 19 | 17 | 14 |
| **8LRH 34/02** | 7,5 | 5,5 | 12,3 | | 46 | 44 | 42 | 40 | 37 | 33 | 27 |
| **8LRH 34/03** | 10 | 7,5 | 16,3 | | 69 | 66 | 63 | 59 | 56 | 50 | 41 |
| **8LRH 34/04** | 15 | 11 | 23,4 | | 92 | 88 | 84 | 79 | 74 | 66 | 54 |
| **8LRH 34/05** | 17,5 | 13 | 27,3 | | 115 | 110 | 105 | 99 | 93 | 83 | 68 |
| **8LRH 34/06** | 20 | 15 | 31,5 | | 138 | 132 | 126 | 119 | 111 | 100 | 82 |
| **8LRH 34/07** | 25 | 18,5 | 38,3 | | 161 | 154 | 147 | 139 | 130 | 116 | 95 |
| **8LRH 34/08** | 30 | 22 | 45,1 | | 184 | 176 | 168 | 158 | 148 | 133 | 109 |
| **8LRH 34/09** | 30 | 22 | 45,1 | | 207 | 198 | 189 | 178 | 167 | 149 | 122 |
| **8LRH 34/10** | 35 | 26 | 52,9 | | 230 | 220 | 210 | 198 | 185 | 166 | 136 |
| **8LRH 34/11** | 35 | 26 | 52,9 | | 253 | 242 | 231 | 218 | 204 | 183 | 150 |
| **8LRH 34/12** | 40 | 30 | 61,1 | | 276 | 264 | 252 | 238 | 222 | 199 | 163 |
| **8LRH 34/13** | 50 | 37 | 75,8 | | 299 | 286 | 273 | 257 | 241 | 216 | 177 |
| **8LRH 34/14** | 50 | 37 | 75,8 | | 322 | 308 | 294 | 277 | 259 | 232 | 190 |
| **8LRH 34/15** | 50 | 37 | 75,8 | | 345 | 330 | 315 | 297 | 278 | 249 | 204 |
| **8LRH 34/16** | 60 | 44 | 86,3 | | 368 | 352 | 336 | 317 | 296 | 266 | 218 |

| | |
|---|---|
| **Max Eff. %** | 71 |
| **Max kW / St.** | 2,4 |

| **NPSH (m)** | Q=25% | Q=50% | Q=75% | Q=100% |
|---|---|---|---|---|
| | 3,3 | 3,3 | 4,5 | 6,7 |

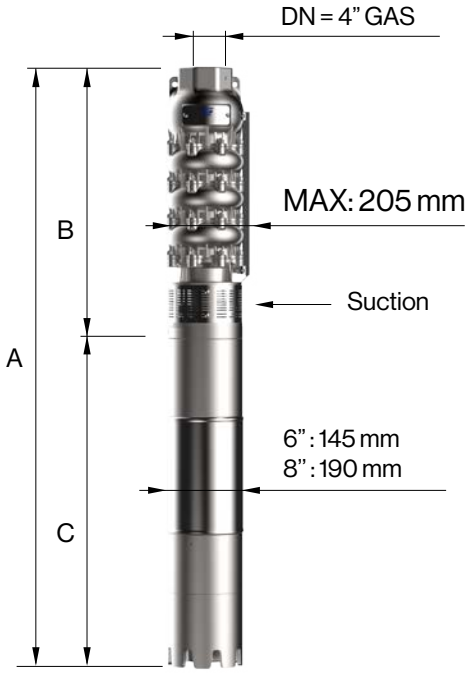


| TYPE 3~ | MOTOR BRACKET | DIMENSIONS (mm) | | | WEIGHT (kg) | |
|---|---|---|---|---|---|---|
| | | A | B | C | MOTOR | PUMP |
| **8LRH 34/01-6** | 6" NEMA | 1106 | 460 | 646 | 40 | 21 |
| **8LRH 34/02-6** | | 1211 | 540 | 671 | 45 | 27 |
| **8LRH 34/03-6** | | 1321 | 620 | 701 | 55 | 33 |
| **8LRH 34/04-6** | | 1511 | 700 | 811 | 65 | 40 |
| **8LRH 34/05-6** | | 1621 | 780 | 841 | 70 | 46 |
| **8LRH 34/06-6** | | 1791 | 860 | 931 | 75 | 52 |
| **8LRH 34/07-6** | | 1931 | 940 | 991 | 83 | 58 |
| **8LRH 34/08-6** | | 2091 | 1020 | 1071 | 92 | 64 |
| **8LRH 34/09-6** | | 2171 | 1100 | 1071 | 92 | 70 |
| **8LRH 34/10-6** | | 2361 | 1180 | 1181 | 100 | 77 |
| **8LRH 34/11-6** | | 2441 | 1260 | 1181 | 100 | 83 |
| **8LRH 34/12-6** | | 2591 | 1340 | 1251 | 108 | 89 |
| **8LRH 34/13-6** | | 2761 | 1420 | 1341 | 118 | 95 |
| **8LRH 34/14-6** | | 2841 | 1500 | 1341 | 118 | 101 |
| **8LRH 34/15-6** | | 2921 | 1580 | 1341 | 118 | 107 |
| **8LRH 34/16** | 8" NEMA | 2783 | 1660 | 1123 | 178 | 113 |

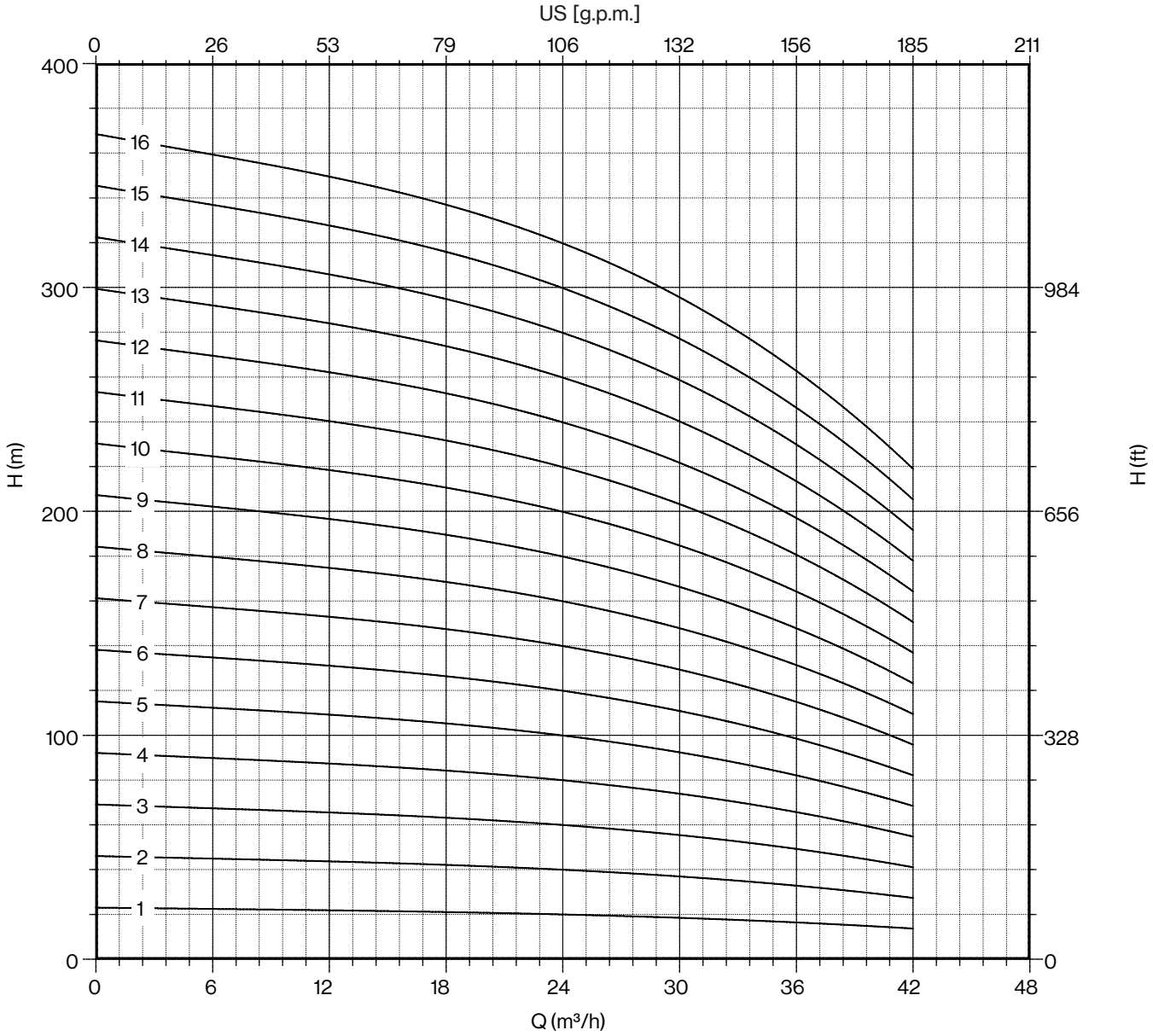
US [g.p.m.]
0
26
53
79
106
132
156
185
211
400
300
200
100
0
H (m)
984
656
328
0
H (ft)
16
15
14
13
12
11
10
9
8
7
6
5
4
3
2
1
0
6
12
18
24
30
36
42
48
Q (m³/h)

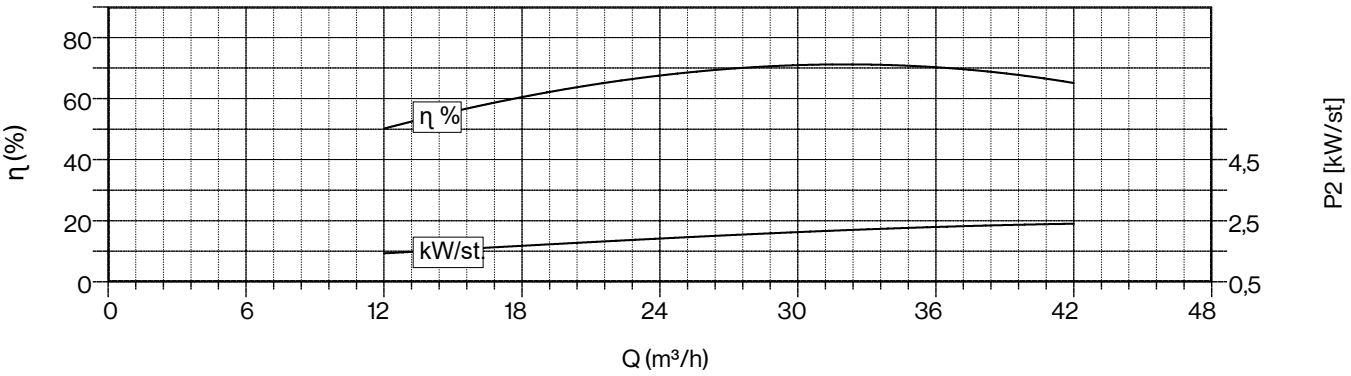
80
60
40
20
0
η (%)
η %
kW/st
4,5
2,5
0,5
P2 [kW/st]
0
6
12
18
24
30
36
42
48
Q (m³/h)

# 8LRH 34

| 50 Hz - 2900 rpm | | | | | Q | | | | | | |
|---|---|---|---|---|---|---|---|---|---|---|---|
| TYPE | SUITABLE MOTOR 3~ 400V | | | l/min | 0 | 200 | 300 | 400 | 500 | 600 | 700 |
| | P2 | | CURRENT | l/sec | 0,0 | 3,3 | 5,0 | 6,7 | 8,3 | 10,0 | 11,7 |
| | HP | kW | A | m³/h | 0 | 12 | 18 | 24 | 30 | 36 | 42 |
| **8LRH 34/17** | 60 | 44 | 86,3 | H (m) | 391 | 374 | 357 | 337 | 315 | 282 | 231 |
| **8LRH 34/18** | 60 | 44 | 86,3 | | 414 | 396 | 378 | 356 | 333 | 299 | 245 |
| **8LRH 34/19** | 75 | 55 | 106,2 | | 437 | 418 | 399 | 376 | 352 | 315 | 258 |
| **8LRH 34/20** | 75 | 55 | 106,2 | | 460 | 440 | 420 | 396 | 370 | 332 | 272 |
| **8LRH 34/21** | 75 | 55 | 106,2 | | 483 | 462 | 441 | 416 | 389 | 349 | 286 |
| **8LRH 34/22** | 75 | 55 | 106,2 | | 506 | 484 | 462 | 436 | 407 | 365 | 299 |
| **8LRH 34/23** | 75 | 55 | 106,2 | | 529 | 506 | 483 | 455 | 426 | 382 | 313 |
| **8LRH 34/24** | 90 | 66 | 126 | | 552 | 528 | 504 | 475 | 444 | 398 | 326 |
| **8LRH 34/25** | 90 | 66 | 126 | | 575 | 550 | 525 | 495 | 463 | 415 | 340 |
| **8LRH 34/26** | 90 | 66 | 126 | | 598 | 572 | 546 | 515 | 481 | 432 | 354 |
| **8LRH 34/27** | 90 | 66 | 126 | | 621 | 594 | 567 | 535 | 500 | 448 | 367 |
| **8LRH 34/28** | 90 | 66 | 126 | | 644 | 616 | 588 | 554 | 518 | 465 | 381 |
| **8LRH 34/29** | 100 | 75 | 143,2 | | 667 | 638 | 609 | 574 | 537 | 481 | 394 |
| **8LRH 34/30** | 100 | 75 | 143,2 | | 690 | 660 | 630 | 594 | 555 | 498 | 408 |
| **8LRH 34/31** | 100 | 75 | 143,2 | | 713 | 682 | 651 | 614 | 574 | 515 | 422 |

| | |
|---|---|
| **Max Eff. %** | 71 |
| **Max kW / St.** | 2,4 |

| **NPSH (m)** | Q=25% | Q=50% | Q=75% | Q=100% |
|---|---|---|---|---|
| | 3,3 | 3,3 | 4,5 | 6,7 |

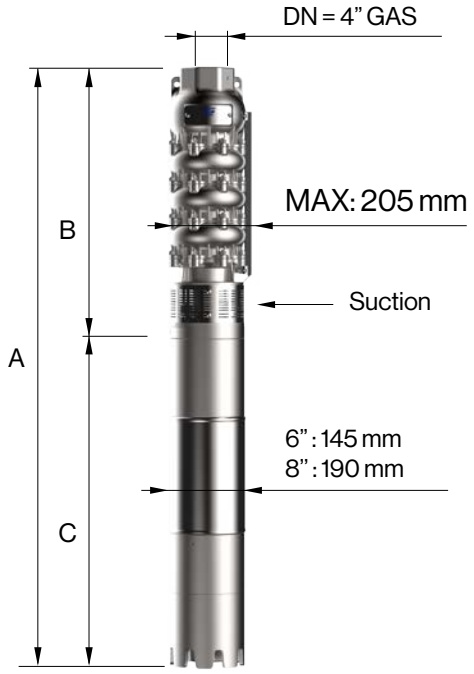


| TYPE 3~ | MOTOR BRACKET | DIMENSIONS (mm) | | | WEIGHT (kg) | |
|---|---|---|---|---|---|---|
| | | A | B | C | MOTOR | PUMP |
| **8LRH 34/17** | 8" NEMA | 2863 | 1740 | 1123 | 178 | 120 |
| **8LRH 34/18** | | 2943 | 1820 | 1123 | 178 | 126 |
| **8LRH 34/19** | | 3133 | 1900 | 1233 | 200 | 132 |
| **8LRH 34/20** | | 3213 | 1980 | 1233 | 200 | 138 |
| **8LRH 34/21** | | 3293 | 2060 | 1233 | 200 | 144 |
| **8LRH 34/22** | | 3373 | 2140 | 1233 | 200 | 150 |
| **8LRH 34/23** | | 3453 | 2220 | 1233 | 200 | 156 |
| **8LRH 34/24** | | 3603 | 2300 | 1303 | 214 | 163 |
| **8LRH 34/25** | | 3683 | 2380 | 1303 | 214 | 169 |
| **8LRH 34/26** | | 3763 | 2460 | 1303 | 214 | 175 |
| **8LRH 34/27** | | 3843 | 2540 | 1303 | 214 | 181 |
| **8LRH 34/28** | | 3923 | 2620 | 1303 | 214 | 187 |
| **8LRH 34/29** | | 4083 | 2700 | 1383 | 230 | 193 |
| **8LRH 34/30** | | 4163 | 2780 | 1383 | 230 | 200 |
| **8LRH 34/31** | | 4243 | 2860 | 1383 | 230 | 206 |

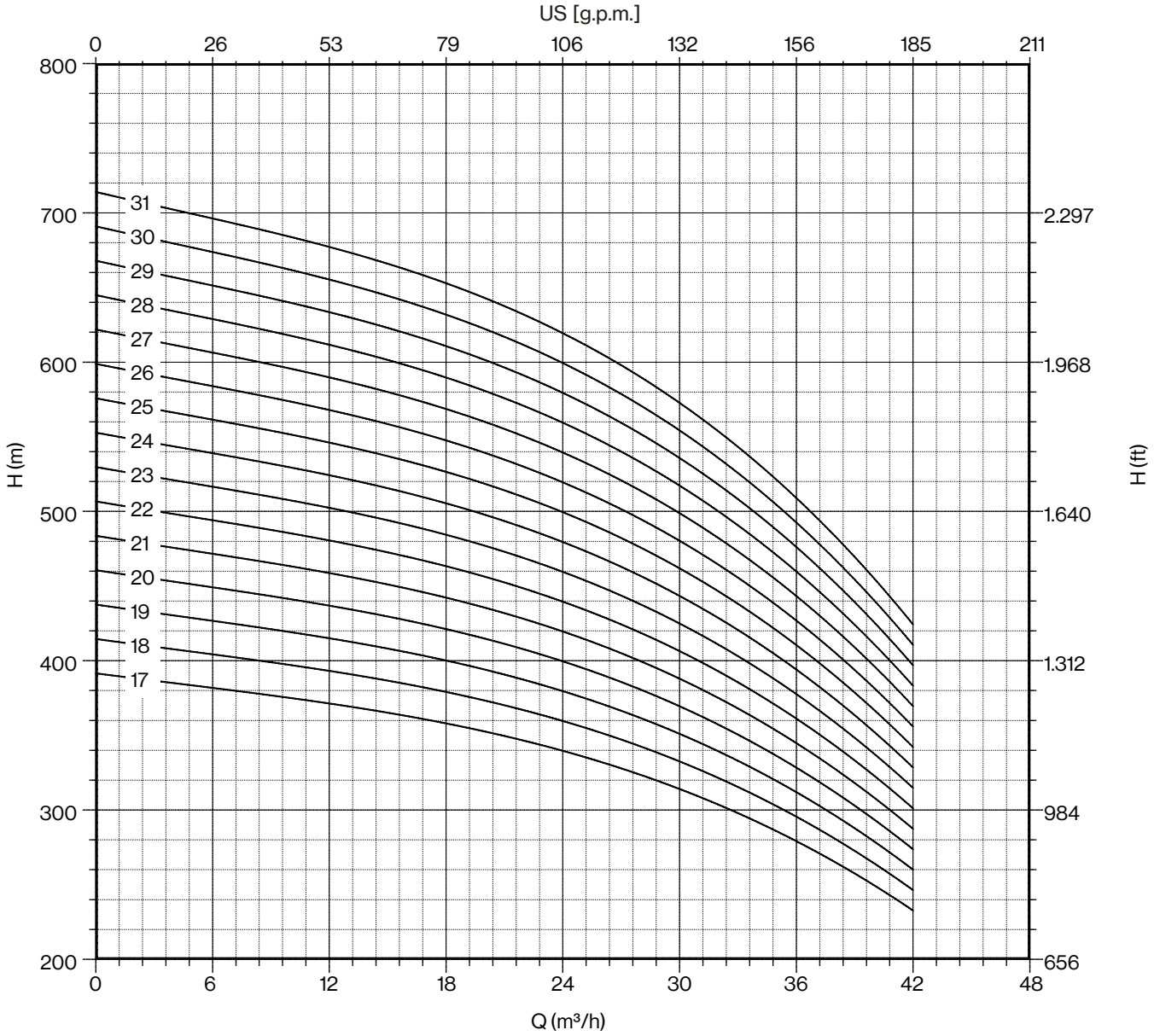
US [g.p.m.]
0
26
53
79
106
132
156
185
211
800
700
600
500
400
300
200
H (m)
2.297
1.968
1.640
1.312
984
656
H (ft)
31
30
29
28
27
26
25
24
23
22
21
20
19
18
17
0
6
12
18
24
30
36
42
48
Q (m³/h)

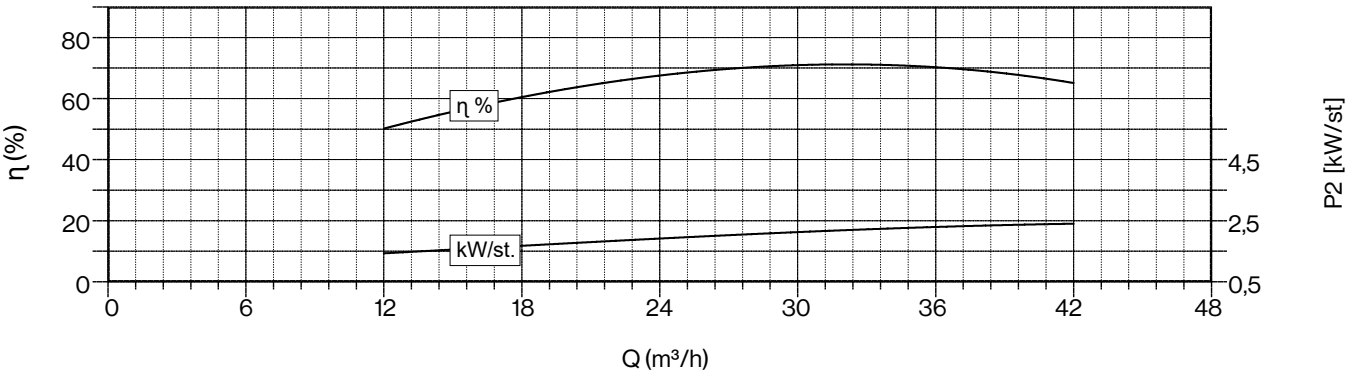
80
60
40
20
0
η (%)
η %
kW/st.
4,5
2,5
0,5
P2 [kW/st]
0
6
12
18
24
30
36
42
48
Q (m³/h)

# 8LRH 42

| 50 Hz - 2900 rpm | | | | | Q | | | | | | | |
|---|---|---|---|---|---|---|---|---|---|---|---|---|
| TYPE | SUITABLE MOTOR 3~ 400V | | | l/min | 0 | 300 | 400 | 500 | 600 | 700 | 800 | 900 |
| | P2 | | CURRENT | l/sec | 0,0 | 5,0 | 6,7 | 8,3 | 10,0 | 11,7 | 13,3 | 15,0 |
| | HP | kW | A | m³/h | 0 | 18 | 24 | 30 | 36 | 42 | 48 | 54 |
| **8LRH 42/01** | 5,5 | 4 | 9,1 | H (m) | 23 | 22 | 21 | 20 | 18 | 16 | 14 | 12 |
| **8LRH 42/02** | 7,5 | 5,5 | 12,3 | | 46 | 44 | 43 | 40 | 37 | 33 | 28 | 23 |
| **8LRH 42/03** | 12,5 | 9,2 | 19,9 | | 70 | 66 | 64 | 60 | 55 | 49 | 42 | 35 |
| **8LRH 42/04** | 15 | 11 | 23,4 | | 93 | 88 | 86 | 80 | 74 | 66 | 56 | 46 |
| **8LRH 42/05** | 20 | 15 | 31,5 | | 116 | 110 | 107 | 100 | 92 | 82 | 70 | 58 |
| **8LRH 42/06** | 25 | 18,5 | 38,3 | | 139 | 132 | 128 | 120 | 110 | 98 | 84 | 70 |
| **8LRH 42/07** | 30 | 22 | 45,1 | | 162 | 154 | 150 | 140 | 129 | 115 | 98 | 81 |
| **8LRH 42/08** | 30 | 22 | 45,1 | | 186 | 176 | 171 | 160 | 147 | 131 | 112 | 93 |
| **8LRH 42/09** | 35 | 26 | 52,9 | | 209 | 198 | 193 | 180 | 166 | 148 | 126 | 104 |
| **8LRH 42/10** | 40 | 30 | 61,1 | | 232 | 220 | 214 | 200 | 184 | 164 | 140 | 116 |
| **8LRH 42/11** | 50 | 37 | 75,8 | | 255 | 242 | 235 | 220 | 202 | 180 | 154 | 128 |
| **8LRH 42/12** | 50 | 37 | 75,8 | | 278 | 264 | 257 | 240 | 221 | 197 | 168 | 139 |
| **8LRH 42/13** | 50 | 37 | 75,8 | | 302 | 286 | 278 | 260 | 239 | 213 | 182 | 151 |
| **8LRH 42/14** | 60 | 44 | 86,3 | | 325 | 308 | 300 | 280 | 258 | 230 | 196 | 162 |
| **8LRH 42/15** | 60 | 44 | 86,3 | | 348 | 330 | 321 | 300 | 276 | 246 | 210 | 174 |
| **8LRH 42/16** | 60 | 44 | 86,3 | | 371 | 352 | 342 | 320 | 294 | 262 | 224 | 186 |

| | |
|---|---|
| **Max Eff. %** | 74 |
| **Max kW / St.** | 2,8 |

| **NPSH (m)** | Q=25% | Q=50% | Q=75% | Q=100% |
|---|---|---|---|---|
| | 3,4 | 3,4 | 4,8 | 8 |

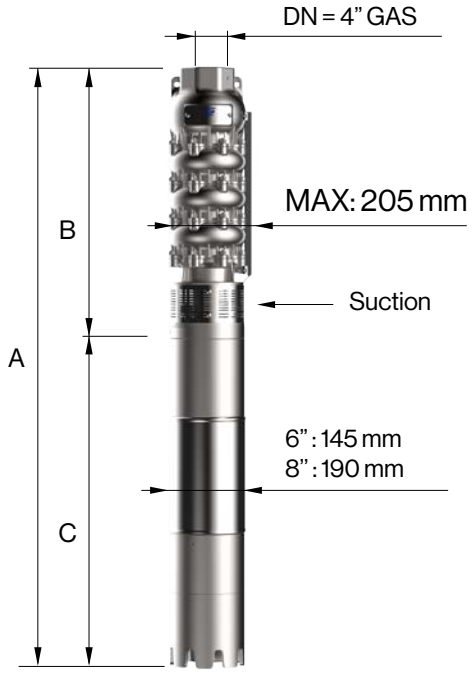


| TYPE 3~ | MOTOR BRACKET | DIMENSIONS (mm) | | | WEIGHT (kg) | |
|---|---|---|---|---|---|---|
| | | A | B | C | MOTOR | PUMP |
| **8LRH 42/01-6** | 6" NEMA | 1106 | 460 | 646 | 40 | 21 |
| **8LRH 42/02-6** | | 1211 | 540 | 671 | 45 | 27 |
| **8LRH 42/03-6** | | 1371 | 620 | 751 | 60 | 33 |
| **8LRH 42/04-6** | | 1511 | 700 | 811 | 65 | 40 |
| **8LRH 42/05-6** | | 1711 | 780 | 931 | 75 | 46 |
| **8LRH 42/06-6** | | 1851 | 860 | 991 | 83 | 52 |
| **8LRH 42/07-6** | | 2011 | 940 | 1071 | 92 | 58 |
| **8LRH 42/08-6** | | 2091 | 1020 | 1071 | 92 | 64 |
| **8LRH 42/09-6** | | 2281 | 1100 | 1181 | 100 | 70 |
| **8LRH 42/10-6** | | 2431 | 1180 | 1251 | 108 | 77 |
| **8LRH 42/11-6** | | 2601 | 1260 | 1341 | 118 | 83 |
| **8LRH 42/12-6** | | 2681 | 1340 | 1341 | 118 | 89 |
| **8LRH 42/13-6** | | 2761 | 1420 | 1341 | 118 | 95 |
| **8LRH 42/14** | 8" NEMA | 2623 | 1500 | 1123 | 178 | 101 |
| **8LRH 42/15** | | 2703 | 1580 | 1123 | 178 | 107 |
| **8LRH 42/16** | | 2783 | 1660 | 1123 | 178 | 113 |

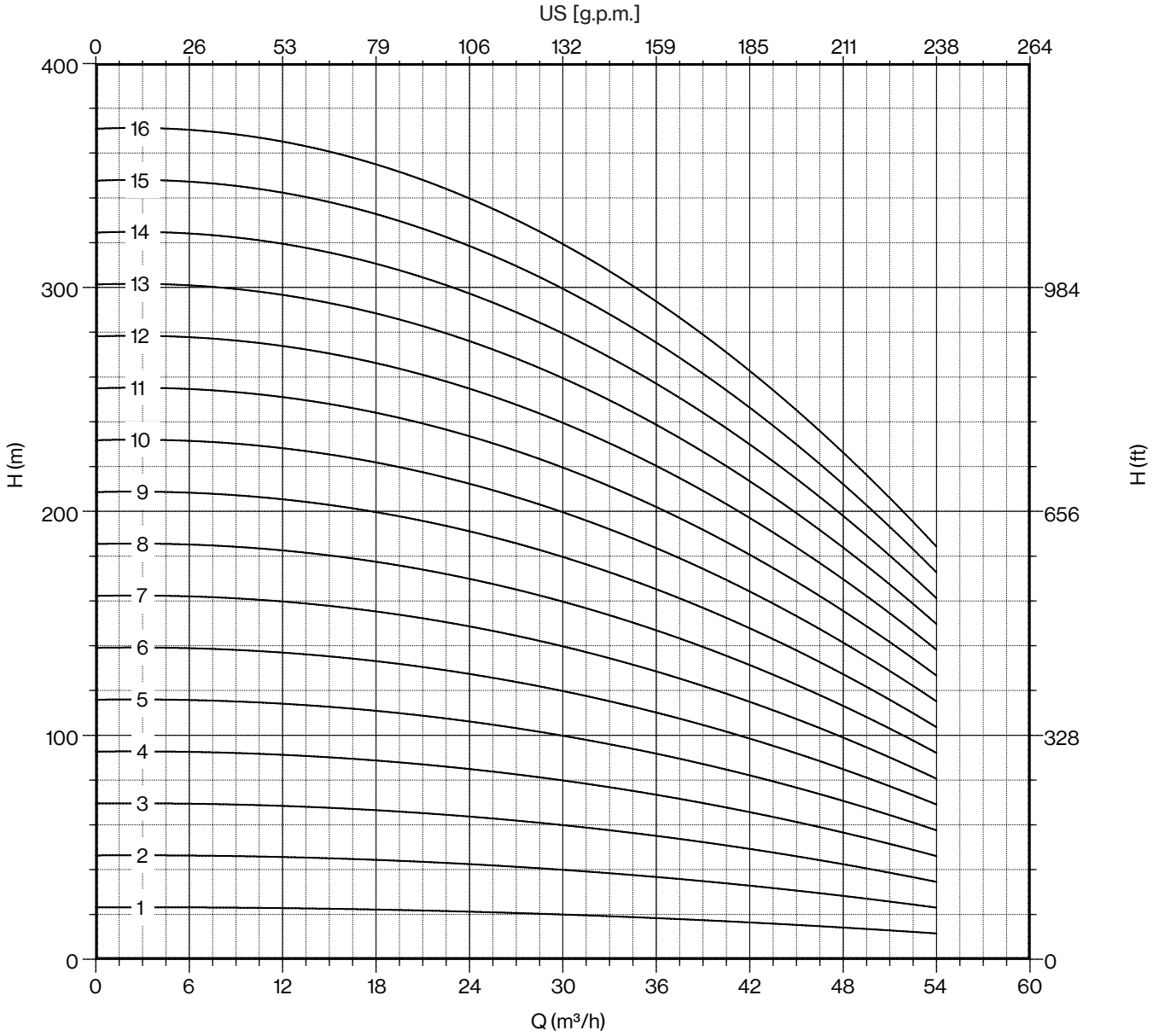
US [g.p.m.]
0
26
53
79
106
132
159
185
211
238
264
400
300
200
100
0
H (m)
984
656
328
0
H (ft)
16
15
14
13
12
11
10
9
8
7
6
5
4
3
2
1
0
6
12
18
24
30
36
42
48
54
60
Q (m³/h)

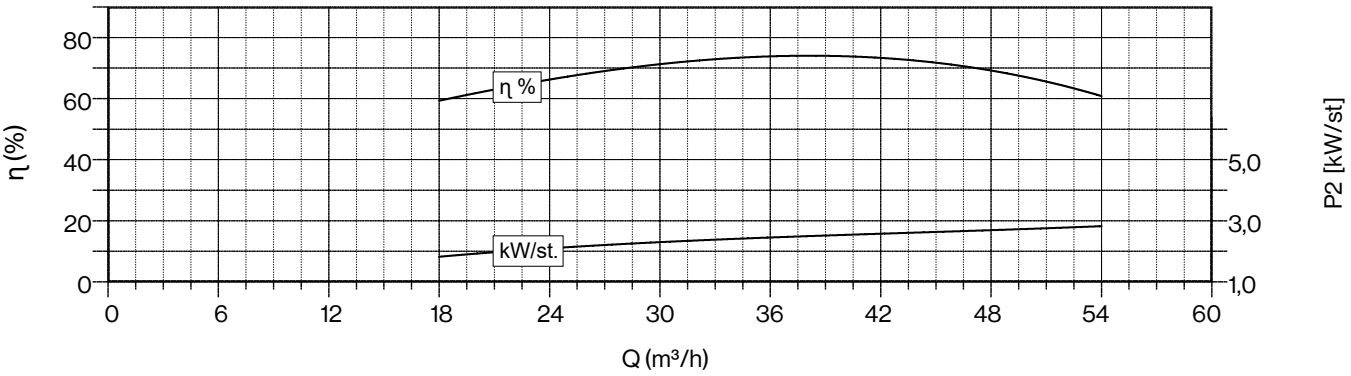
80
60
40
20
0
η (%)
η %
kW/st.
5,0
3,0
1,0
P2 [kW/st]
0
6
12
18
24
30
36
42
48
54
60
Q (m³/h)

# 8LRH 42

| 50 Hz - 2900 rpm | | | | | Q | | | | | | | |
|---|---|---|---|---|---|---|---|---|---|---|---|---|
| TYPE | SUITABLE MOTOR 3~ 400V | | | l/min | 0 | 300 | 400 | 500 | 600 | 700 | 800 | 900 |
| | P2 | | CURRENT | l/sec | 0,0 | 5,0 | 6,7 | 8,3 | 10,0 | 11,7 | 13,3 | 15,0 |
| | HP | kW | A | m³/h | 0 | 18 | 24 | 30 | 36 | 42 | 48 | 54 |
| **8LRH 42/17** | 75 | 55 | 106,2 | H (m) | 394 | 374 | 364 | 340 | 313 | 279 | 238 | 197 |
| **8LRH 42/18** | 75 | 55 | 106,2 | | 418 | 396 | 385 | 360 | 331 | 295 | 252 | 209 |
| **8LRH 42/19** | 75 | 55 | 106,2 | | 441 | 418 | 407 | 380 | 350 | 312 | 266 | 220 |
| **8LRH 42/20** | 90 | 66 | 126 | | 464 | 440 | 428 | 400 | 368 | 328 | 280 | 232 |
| **8LRH 42/21** | 90 | 66 | 126 | | 487 | 462 | 449 | 420 | 386 | 344 | 294 | 244 |
| **8LRH 42/22** | 90 | 66 | 126 | | 510 | 484 | 471 | 440 | 405 | 361 | 308 | 255 |
| **8LRH 42/23** | 90 | 66 | 126 | | 534 | 506 | 492 | 460 | 423 | 377 | 322 | 267 |
| **8LRH 42/24** | 100 | 75 | 143,2 | | 557 | 528 | 514 | 480 | 442 | 394 | 336 | 278 |
| **8LRH 42/25** | 100 | 75 | 143,2 | | 580 | 550 | 535 | 500 | 460 | 410 | 350 | 290 |
| **8LRH 42/26** | 100 | 75 | 143,2 | | 603 | 572 | 556 | 520 | 478 | 426 | 364 | 302 |
| **8LRH 42/27** | 125 | 92 | 175,1 | | 626 | 594 | 578 | 540 | 497 | 443 | 378 | 313 |
| **8LRH 42/28** | 125 | 92 | 175,1 | | 650 | 616 | 599 | 560 | 515 | 459 | 392 | 325 |
| **8LRH 42/29** | 125 | 92 | 175,1 | | 673 | 638 | 621 | 580 | 534 | 476 | 406 | 336 |
| **8LRH 42/30** | 125 | 92 | 175,1 | | 696 | 660 | 642 | 600 | 552 | 492 | 420 | 348 |
| **8LRH 42/31** | 125 | 92 | 175,1 | | 719 | 682 | 663 | 620 | 570 | 508 | 434 | 360 |

| | |
|---|---|
| **Max Eff. %** | 74 |
| **Max kW / St.** | 2,8 |

| **NPSH (m)** | Q=25% | Q=50% | Q=75% | Q=100% |
|---|---|---|---|---|
| | 3,4 | 3,4 | 4,8 | 8 |

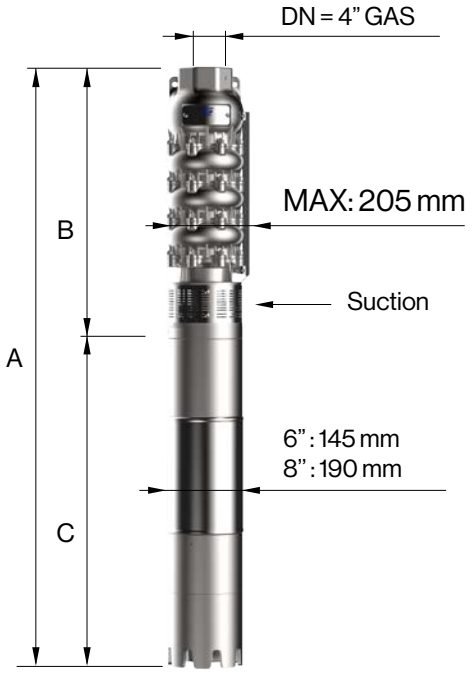


| TYPE 3~ | MOTOR BRACKET | DIMENSIONS (mm) | | | WEIGHT (kg) | |
|---|---|---|---|---|---|---|
| | | A | B | C | MOTOR | PUMP |
| **8LRH 42/17** | 8" NEMA | 2973 | 1740 | 1233 | 200 | 120 |
| **8LRH 42/18** | | 3053 | 1820 | 1233 | 200 | 126 |
| **8LRH 42/19** | | 3133 | 1900 | 1233 | 200 | 132 |
| **8LRH 42/20** | | 3283 | 1980 | 1303 | 214 | 138 |
| **8LRH 42/21** | | 3363 | 2060 | 1303 | 214 | 144 |
| **8LRH 42/22** | | 3443 | 2140 | 1303 | 214 | 150 |
| **8LRH 42/23** | | 3523 | 2220 | 1303 | 214 | 156 |
| **8LRH 42/24** | | 3683 | 2300 | 1383 | 230 | 163 |
| **8LRH 42/25** | | 3763 | 2380 | 1383 | 230 | 169 |
| **8LRH 42/26** | | 3843 | 2460 | 1383 | 230 | 175 |
| **8LRH 42/27** | | 4123 | 2540 | 1583 | 270 | 181 |
| **8LRH 42/28** | | 4203 | 2620 | 1583 | 270 | 187 |
| **8LRH 42/29** | | 4283 | 2700 | 1583 | 270 | 193 |
| **8LRH 42/30** | | 4363 | 2780 | 1583 | 270 | 200 |
| **8LRH 42/31** | | 4443 | 2860 | 1583 | 270 | 206 |

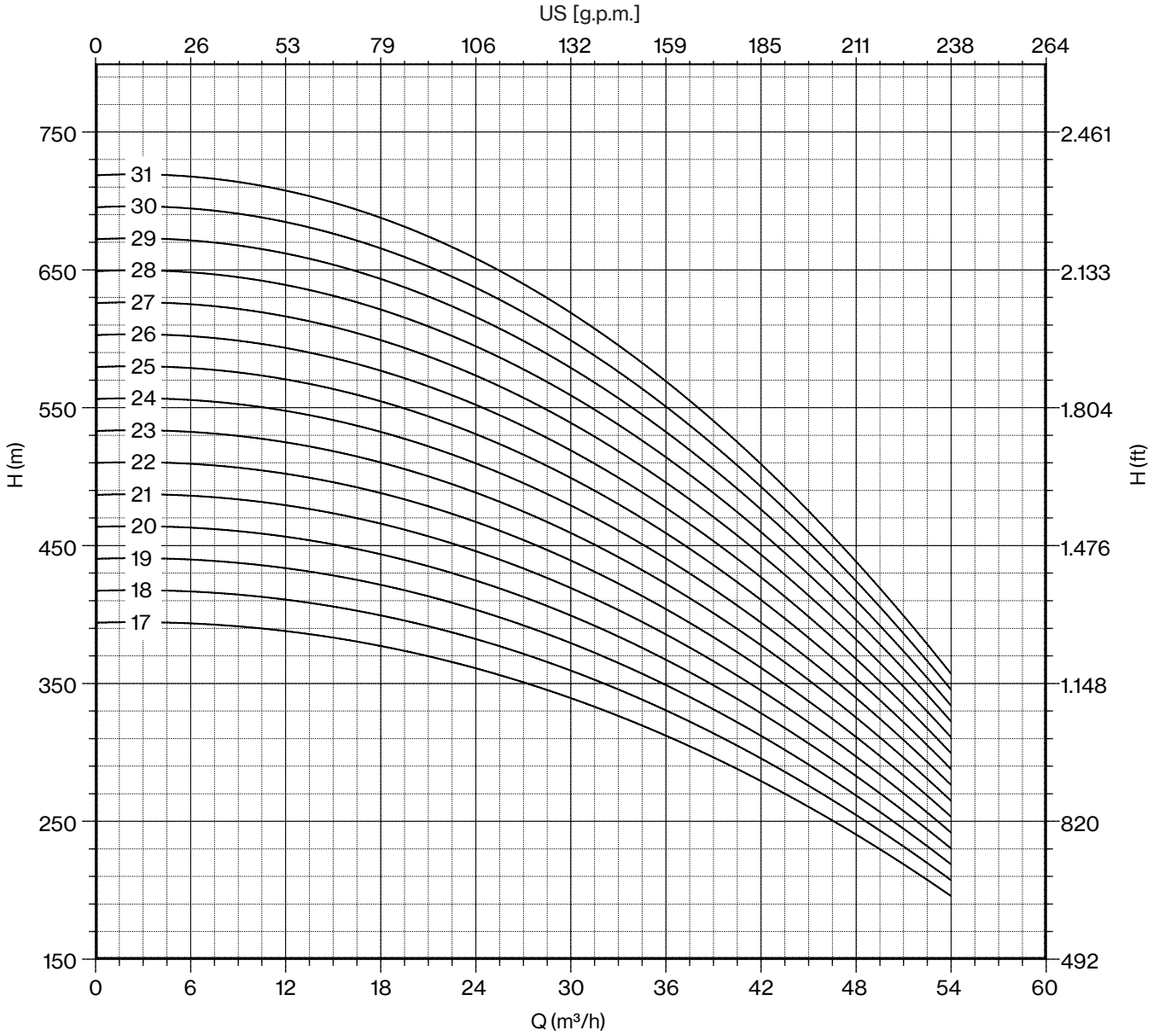
US [g.p.m.]
0
26
53
79
106
132
159
185
211
238
264
750
650
550
450
350
250
150
H (m)
2.461
2.133
1.804
1.476
1.148
820
492
H (ft)
31
30
29
28
27
26
25
24
23
22
21
20
19
18
17
0
6
12
18
24
30
36
42
48
54
60
Q (m³/h)

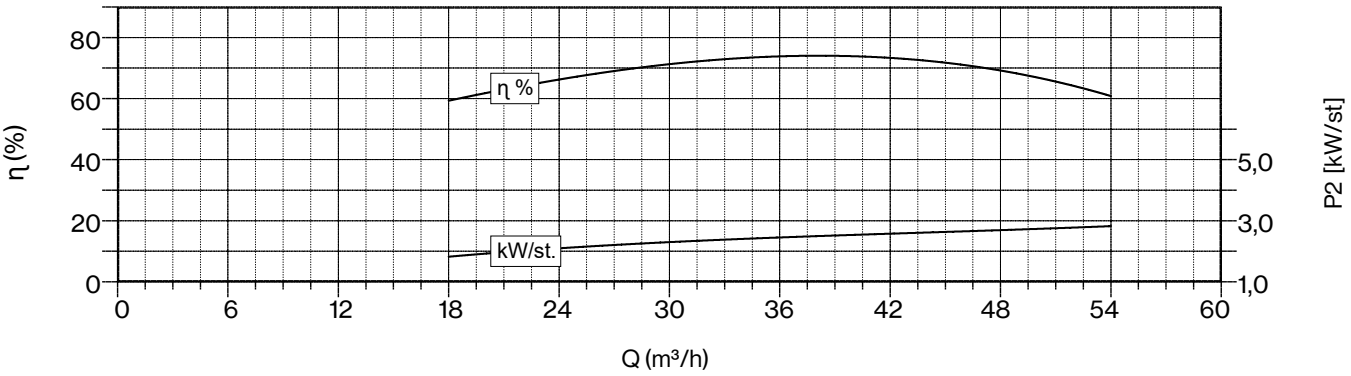
80
60
40
20
0
η (%)
η %
kW/st.
5,0
3,0
1,0
P2 [kW/st]
0
6
12
18
24
30
36
42
48
54
60
Q (m³/h)

# 8LRH 52

| 50 Hz - 2900 rpm | | | | | Q | | | | | | | |
|---|---|---|---|---|---|---|---|---|---|---|---|---|
| TYPE | SUITABLE MOTOR 3~ 400V | | | l/min | 0 | 500 | 600 | 700 | 800 | 900 | 1000 | 1100 |
| | P2 | | CURRENT | l/sec | 0,0 | 8,3 | 10,0 | 11,7 | 13,3 | 15,0 | 16,7 | 18,3 |
| | HP | kW | A | m³/h | 0 | 30 | 36 | 42 | 48 | 54 | 60 | 66 |
| **8LRH 52/01** | 5,5 | 4 | 9,1 | H (m) | 24 | 21 | 21 | 19 | 18 | 17 | 15 | 13 |
| **8LRH 52/02** | 10 | 7,5 | 16,3 | | 48 | 43 | 41 | 39 | 36 | 33 | 30 | 25 |
| **8LRH 52/03** | 15 | 11 | 23,4 | | 72 | 64 | 62 | 58 | 55 | 50 | 44 | 38 |
| **8LRH 52/04** | 20 | 15 | 31,5 | | 96 | 86 | 82 | 78 | 73 | 66 | 59 | 50 |
| **8LRH 52/05** | 25 | 18,5 | 38,3 | | 120 | 107 | 103 | 97 | 91 | 83 | 74 | 63 |
| **8LRH 52/06** | 30 | 22 | 45,1 | | 144 | 128 | 124 | 116 | 109 | 100 | 89 | 76 |
| **8LRH 52/07** | 35 | 26 | 52,9 | | 168 | 150 | 144 | 136 | 127 | 116 | 104 | 88 |
| **8LRH 52/08** | 40 | 30 | 61,1 | | 192 | 171 | 165 | 155 | 146 | 133 | 118 | 101 |
| **8LRH 52/09** | 50 | 37 | 75,8 | | 216 | 193 | 185 | 175 | 164 | 149 | 133 | 113 |
| **8LRH 52/10** | 50 | 37 | 75,8 | | 240 | 214 | 206 | 194 | 182 | 166 | 148 | 126 |
| **8LRH 52/11** | 60 | 44 | 86,3 | | 264 | 235 | 227 | 213 | 200 | 183 | 163 | 139 |
| **8LRH 52/12** | 60 | 44 | 86,3 | | 288 | 257 | 247 | 233 | 218 | 199 | 178 | 151 |
| **8LRH 52/13** | 75 | 55 | 106,2 | | 312 | 278 | 268 | 252 | 237 | 216 | 192 | 164 |

| | |
|---|---|
| **Max Eff. %** | 73 |
| **Max kW / St.** | 3,5 |

| **NPSH (m)** | Q=25% | Q=50% | Q=75% | Q=100% |
|---|---|---|---|---|
| | 3,5 | 3,5 | 6 | 8 |

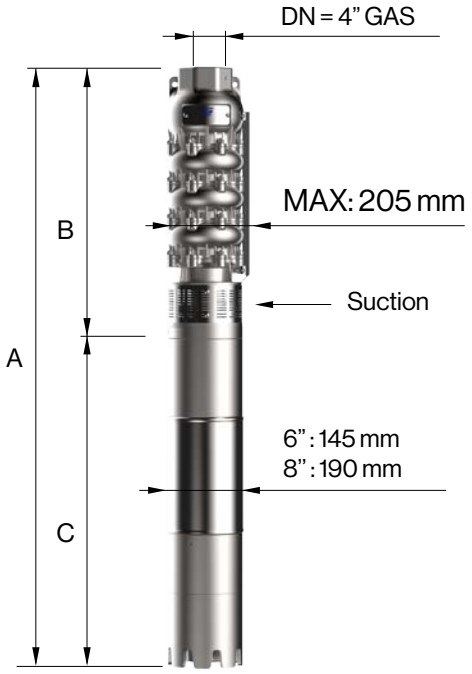


| TYPE 3~ | MOTOR BRACKET | DIMENSIONS (mm) | | | WEIGHT (kg) | |
|---|---|---|---|---|---|---|
| | | A | B | C | MOTOR | PUMP |
| **8LRH 52/01-6** | 6" NEMA | 1114 | 468 | 646 | 40 | 22 |
| **8LRH 52/02-6** | | 1257 | 556 | 701 | 55 | 29 |
| **8LRH 52/03-6** | | 1455 | 644 | 811 | 65 | 36 |
| **8LRH 52/04-6** | | 1663 | 732 | 931 | 75 | 44 |
| **8LRH 52/05-6** | | 1811 | 820 | 991 | 83 | 51 |
| **8LRH 52/06-6** | | 1979 | 908 | 1071 | 92 | 58 |
| **8LRH 52/07-6** | | 2177 | 996 | 1181 | 100 | 65 |
| **8LRH 52/08-6** | | 2335 | 1084 | 1251 | 108 | 72 |
| **8LRH 52/09-6** | | 2513 | 1172 | 1341 | 118 | 79 |
| **8LRH 52/10-6** | | 2601 | 1260 | 1341 | 118 | 87 |
| **8LRH 52/11** | 8" NEMA | 2471 | 1348 | 1123 | 178 | 94 |
| **8LRH 52/12** | | 2559 | 1436 | 1123 | 178 | 101 |
| **8LRH 52/13** | | 2757 | 1524 | 1233 | 200 | 108 |

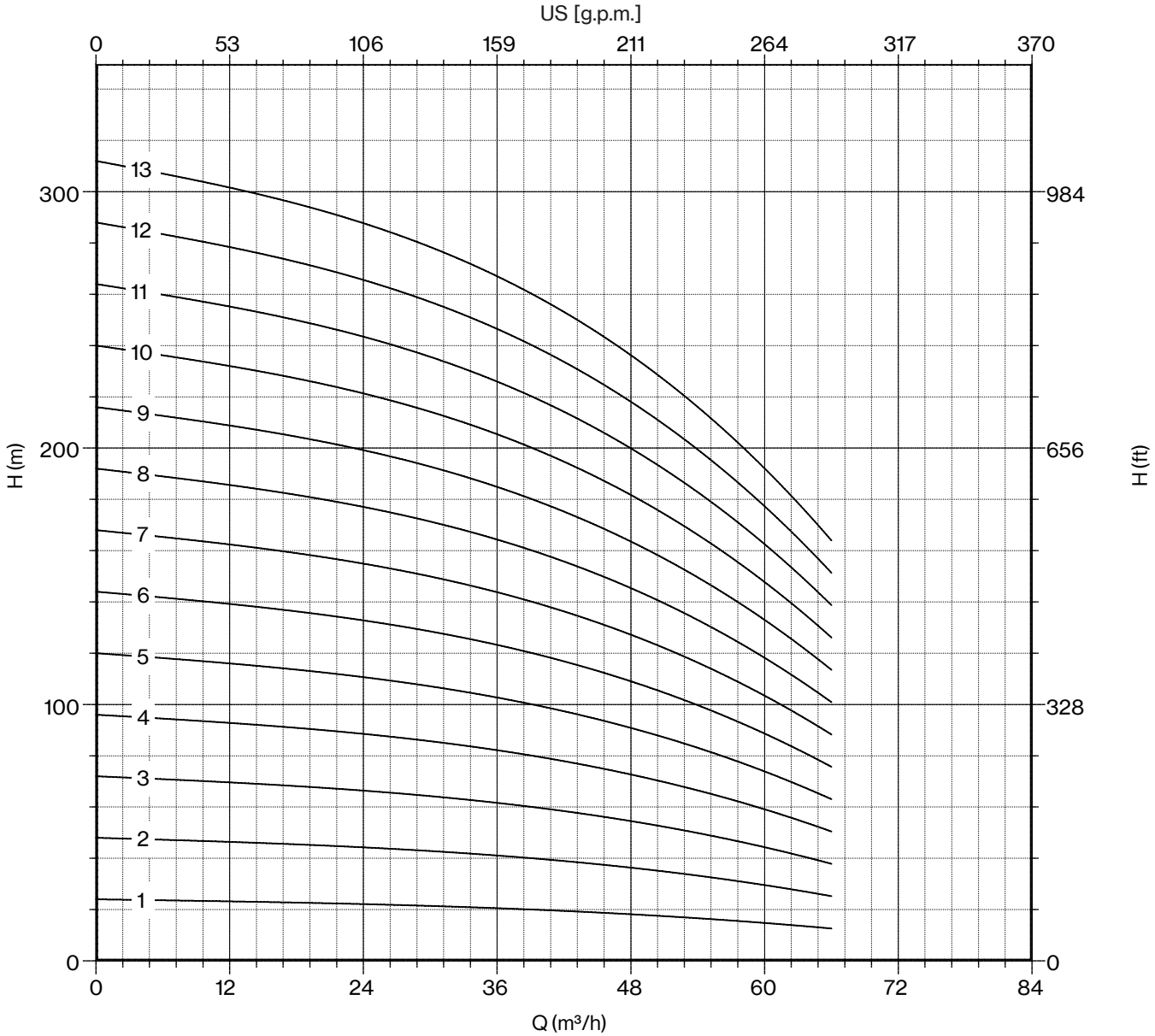
US [g.p.m.]
0
53
106
159
211
264
317
370
H (m)
300
200
100
0
H (ft)
984
656
328
0
13
12
11
10
9
8
7
6
5
4
3
2
1
0
12
24
36
48
60
72
84
Q (m³/h)

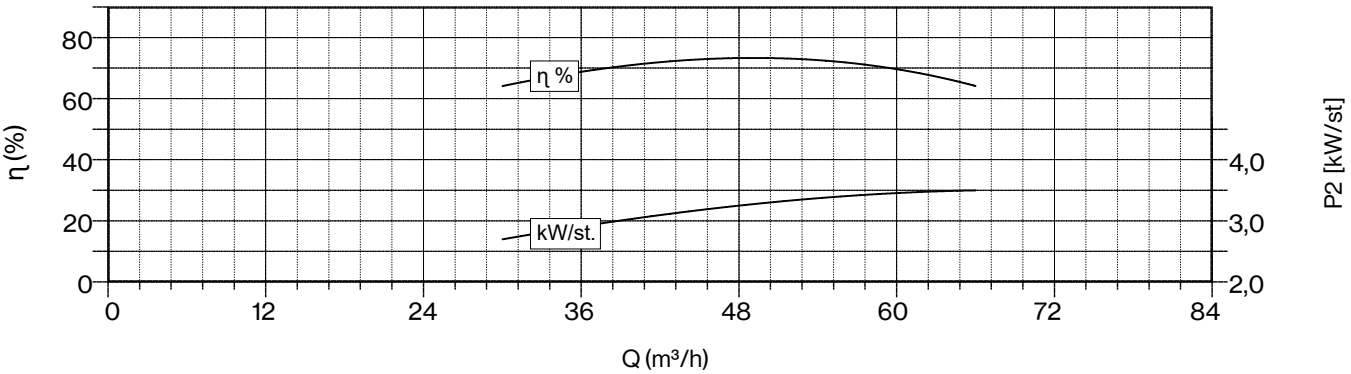
η (%)
80
60
40
20
0
η %
kW/st.
P2 [kW/st]
4,0
3,0
2,0
0
12
24
36
48
60
72
84
Q (m³/h)

# 8LRH 52

| 50 Hz - 2900 rpm | | | | | Q | | | | | | | |
|---|---|---|---|---|---|---|---|---|---|---|---|---|
| TYPE | SUITABLE MOTOR 3~ 400V | | | l/min | 0 | 500 | 600 | 700 | 800 | 900 | 1000 | 1100 |
| | P2 | | CURRENT | l/sec | 0,0 | 8,3 | 10,0 | 11,7 | 13,3 | 15,0 | 16,7 | 18,3 |
| | HP | kW | A | m³/h | 0 | 30 | 36 | 42 | 48 | 54 | 60 | 66 |
| **8LRH 52/14** | 75 | 55 | 106,2 | H (m) | 336 | 300 | 288 | 272 | 255 | 232 | 207 | 176 |
| **8LRH 52/15** | 75 | 55 | 106,2 | | 360 | 321 | 309 | 291 | 273 | 249 | 222 | 189 |
| **8LRH 52/16** | 75 | 55 | 106,2 | | 384 | 342 | 330 | 310 | 291 | 266 | 237 | 202 |
| **8LRH 52/17** | 90 | 66 | 126 | | 408 | 364 | 350 | 330 | 309 | 282 | 252 | 214 |
| **8LRH 52/18** | 90 | 66 | 126 | | 432 | 385 | 371 | 349 | 328 | 299 | 266 | 227 |
| **8LRH 52/19** | 90 | 66 | 126 | | 456 | 407 | 391 | 369 | 346 | 315 | 281 | 239 |
| **8LRH 52/20** | 100 | 75 | 143,2 | | 480 | 428 | 412 | 388 | 364 | 332 | 296 | 252 |
| **8LRH 52/21** | 100 | 75 | 143,2 | | 504 | 449 | 433 | 407 | 382 | 349 | 311 | 265 |
| **8LRH 52/22** | 125 | 92 | 175,1 | | 528 | 471 | 453 | 427 | 400 | 365 | 326 | 277 |
| **8LRH 52/23** | 125 | 92 | 175,1 | | 552 | 492 | 474 | 446 | 419 | 382 | 340 | 290 |
| **8LRH 52/24** | 125 | 92 | 175,1 | | 576 | 514 | 494 | 466 | 437 | 398 | 355 | 302 |
| **8LRH 52/25** | 125 | 92 | 175,1 | | 600 | 535 | 515 | 485 | 455 | 415 | 370 | 315 |
| **8LRH 52/26** | 125 | 92 | 175,1 | | 624 | 556 | 536 | 504 | 473 | 432 | 385 | 328 |

| | |
|---|---|
| **Max Eff. %** | 73 |
| **Max kW / St.** | 3,5 |

| **NPSH (m)** | Q=25% | Q=50% | Q=75% | Q=100% |
|---|---|---|---|---|
| | 3,5 | 3,5 | 6 | 8 |

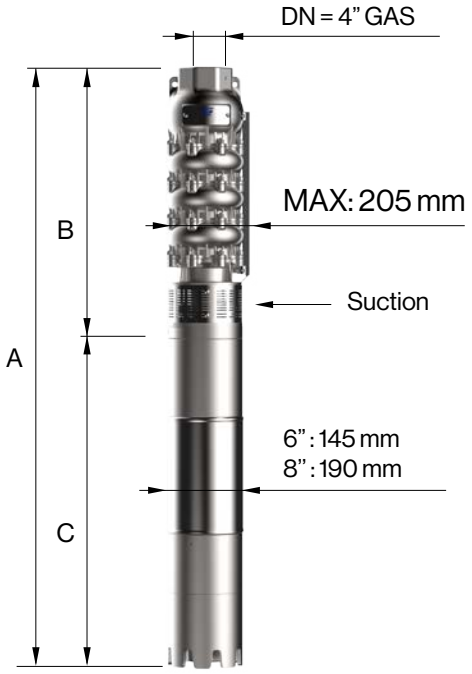


| TYPE 3~ | MOTOR BRACKET | DIMENSIONS (mm) | | | WEIGHT (kg) | |
|---|---|---|---|---|---|---|
| | | A | B | C | MOTOR | PUMP |
| **8LRH 52/14** | 8" NEMA | 2845 | 1612 | 1233 | 200 | 115 |
| **8LRH 52/15** | | 2933 | 1700 | 1233 | 200 | 122 |
| **8LRH 52/16** | | 3021 | 1788 | 1233 | 200 | 129 |
| **8LRH 52/17** | | 3179 | 1876 | 1303 | 214 | 137 |
| **8LRH 52/18** | | 3267 | 1964 | 1303 | 214 | 144 |
| **8LRH 52/19** | | 3355 | 2052 | 1303 | 214 | 151 |
| **8LRH 52/20** | | 3523 | 2140 | 1383 | 230 | 158 |
| **8LRH 52/21** | | 3611 | 2228 | 1383 | 230 | 165 |
| **8LRH 52/22** | | 3899 | 2316 | 1583 | 270 | 172 |
| **8LRH 52/23** | | 3987 | 2404 | 1583 | 270 | 179 |
| **8LRH 52/24** | | 4075 | 2492 | 1583 | 270 | 187 |
| **8LRH 52/25** | | 4163 | 2580 | 1583 | 270 | 194 |
| **8LRH 52/26** | | 4251 | 2668 | 1583 | 270 | 201 |

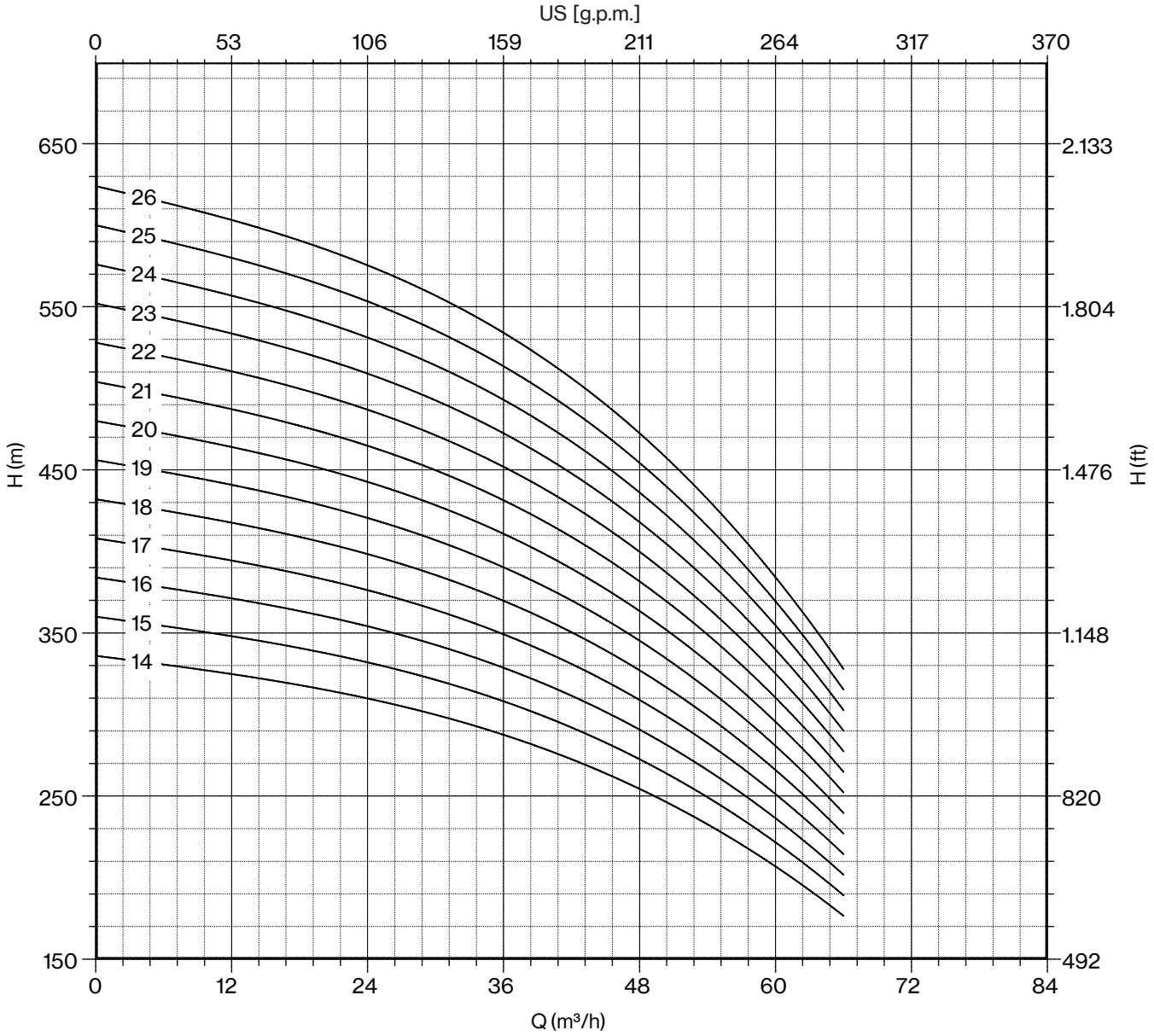
US [g.p.m.]
0
53
106
159
211
264
317
370
650
550
450
350
250
150
2.133
1.804
1.476
1.148
820
492
H (m)
H (ft)
26
25
24
23
22
21
20
19
18
17
16
15
14
0
12
24
36
48
60
72
84
Q (m³/h)

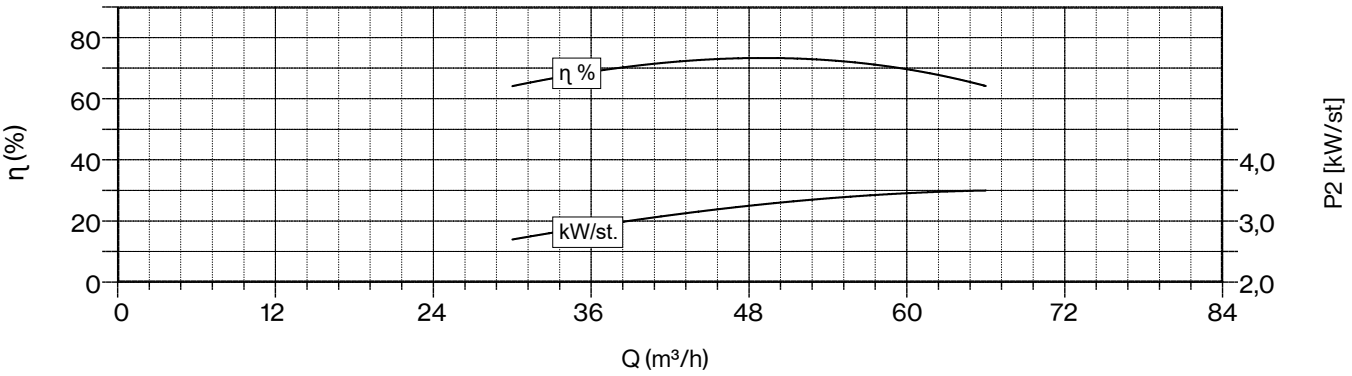
80
60
40
20
0
η (%)
η %
kW/st.
4,0
3,0
2,0
P2 [kW/st]
0
12
24
36
48
60
72
84
Q (m³/h)

# 8LRH 62

| 50 Hz - 2900 rpm | | | | | Q | | | | | | | |
|---|---|---|---|---|---|---|---|---|---|---|---|---|
| TYPE | SUITABLE MOTOR 3~ 400V | | | l/min | 0 | 600 | 800 | 900 | 1000 | 1100 | 1200 | 1300 |
| | P2 | | CURRENT | l/sec | 0,0 | 10,0 | 13,3 | 15,0 | 16,7 | 18,3 | 20,0 | 21,7 |
| | HP | kW | A | m³/h | 0 | 36 | 48 | 54 | 60 | 66 | 72 | 78 |
| **8LRH 62/01** | 5,5 | 4 | 9,1 | H (m) | 23 | 21 | 19 | 18 | 17 | 15 | 14 | 12 |
| **8LRH 62/02** | 10 | 7,5 | 16,3 | | 45 | 42 | 38 | 36 | 34 | 30 | 27 | 23 |
| **8LRH 62/03** | 15 | 11 | 23,4 | | 68 | 63 | 57 | 54 | 50 | 46 | 41 | 35 |
| **8LRH 62/04** | 20 | 15 | 31,5 | | 90 | 84 | 76 | 72 | 67 | 61 | 54 | 46 |
| **8LRH 62/05** | 25 | 18,5 | 38,3 | | 113 | 105 | 95 | 90 | 84 | 76 | 68 | 58 |
| **8LRH 62/06** | 30 | 22 | 45,1 | | 136 | 126 | 114 | 108 | 101 | 91 | 82 | 70 |
| **8LRH 62/07** | 35 | 26 | 52,9 | | 158 | 147 | 133 | 126 | 118 | 106 | 95 | 81 |
| **8LRH 62/08** | 40 | 30 | 61,1 | | 181 | 168 | 152 | 144 | 134 | 122 | 109 | 93 |
| **8LRH 62/09** | 50 | 37 | 75,8 | | 203 | 189 | 171 | 162 | 151 | 137 | 122 | 104 |
| **8LRH 62/10** | 50 | 37 | 75,8 | | 226 | 210 | 190 | 180 | 168 | 152 | 136 | 116 |
| **8LRH 62/11** | 60 | 44 | 86,3 | | 249 | 231 | 209 | 198 | 185 | 167 | 150 | 128 |
| **8LRH 62/12** | 60 | 44 | 86,3 | | 271 | 252 | 228 | 216 | 202 | 182 | 163 | 139 |

| | |
|---|---|
| **Max Eff. %** | 75 |
| **Max kW / St.** | 3,8 |

| **NPSH (m)** | Q=25% | Q=50% | Q=75% | Q=100% |
|---|---|---|---|---|
| | 3,6 | 3,6 | 6 | 8 |

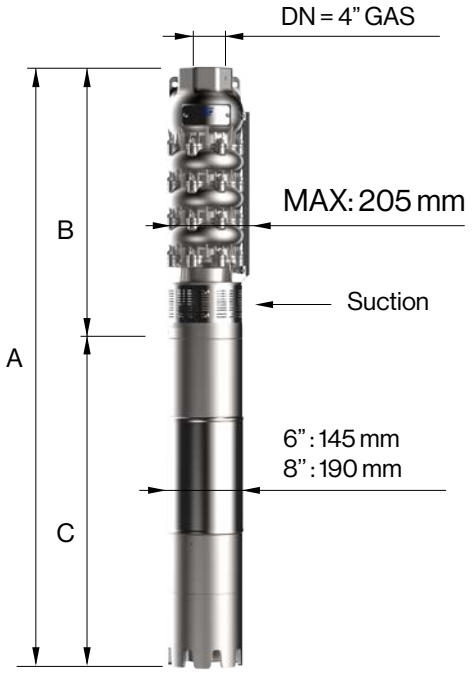


| TYPE 3~ | MOTOR BRACKET | DIMENSIONS (mm) | | | WEIGHT (kg) | |
|---|---|---|---|---|---|---|
| | | A | B | C | MOTOR | PUMP |
| **8LRH 62/01-6** | 6" NEMA | 1114 | 468 | 646 | 40 | 22 |
| **8LRH 62/02-6** | | 1257 | 556 | 701 | 55 | 29 |
| **8LRH 62/03-6** | | 1455 | 644 | 811 | 65 | 36 |
| **8LRH 62/04-6** | | 1663 | 732 | 931 | 75 | 44 |
| **8LRH 62/05-6** | | 1811 | 820 | 991 | 83 | 51 |
| **8LRH 62/06-6** | | 1979 | 908 | 1071 | 92 | 58 |
| **8LRH 62/07-6** | | 2177 | 996 | 1181 | 100 | 65 |
| **8LRH 62/08-6** | | 2335 | 1084 | 1251 | 108 | 72 |
| **8LRH 62/09-6** | | 2513 | 1172 | 1341 | 118 | 79 |
| **8LRH 62/10-6** | | 2601 | 1260 | 1341 | 118 | 87 |
| **8LRH 62/11** | 8" NEMA | 2471 | 1348 | 1123 | 178 | 94 |
| **8LRH 62/12** | | 2559 | 1436 | 1123 | 178 | 101 |

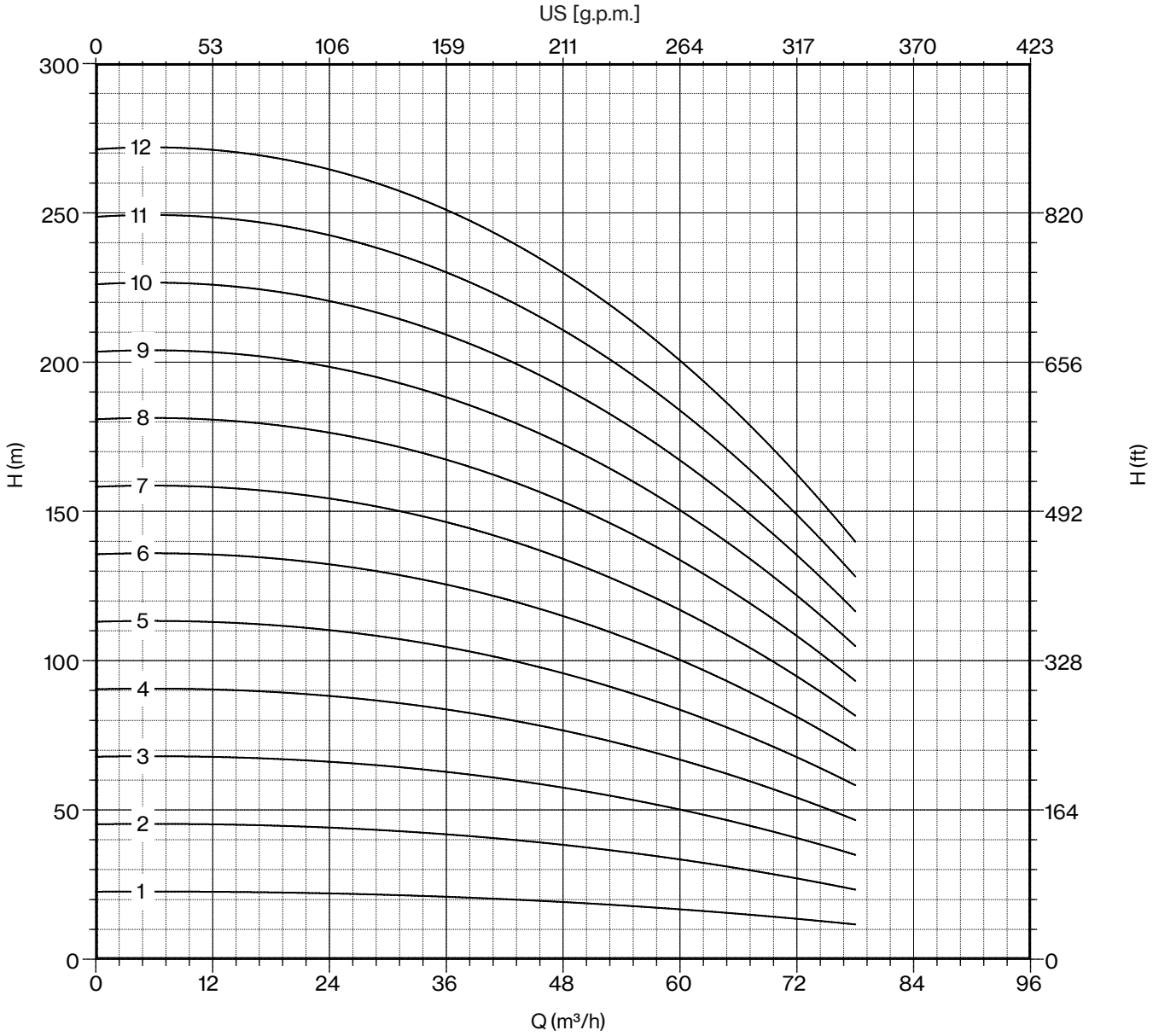
US [g.p.m.]
0
53
106
159
211
264
317
370
423
300
250
200
150
100
50
0
H (m)
820
656
492
328
164
0
H (ft)
12
11
10
9
8
7
6
5
4
3
2
1
0
12
24
36
48
60
72
84
96
Q (m³/h)

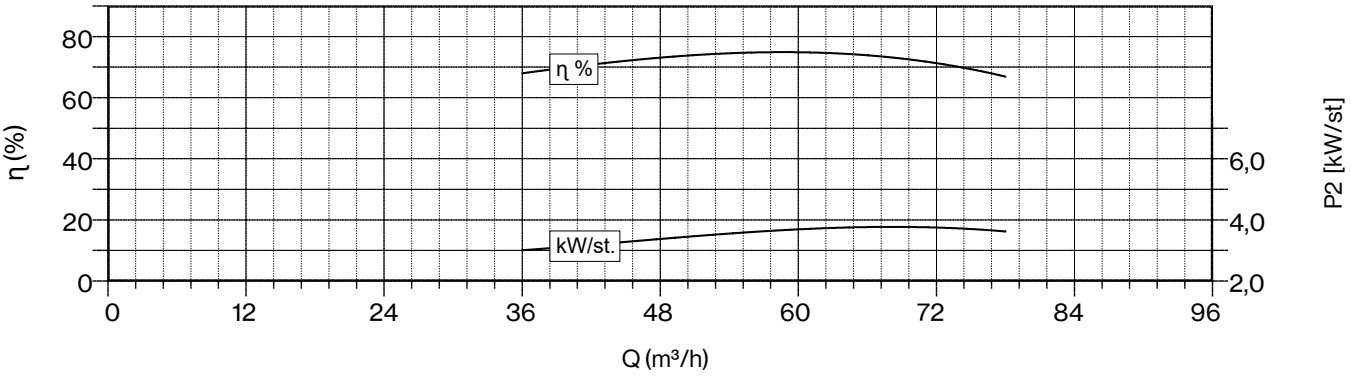
80
60
40
20
0
η (%)
η %
kW/st.
6,0
4,0
2,0
P2 [kW/st]
0
12
24
36
48
60
72
84
96
Q (m³/h)

# 8LRH 62

| 50 Hz - 2900 rpm | | | | | Q | | | | | | | |
|---|---|---|---|---|---|---|---|---|---|---|---|---|
| TYPE | SUITABLE MOTOR 3~ 400V | | | l/min | 0 | 600 | 800 | 900 | 1000 | 1100 | 1200 | 1300 |
| | P2 | | CURRENT | l/sec | 0,0 | 10,0 | 13,3 | 15,0 | 16,7 | 18,3 | 20,0 | 21,7 |
| | HP | kW | A | m³/h | 0 | 36 | 48 | 54 | 60 | 66 | 72 | 78 |
| **8LRH 62/13** | 75 | 55 | 106,2 | H (m) | 294 | 273 | 247 | 234 | 218 | 198 | 177 | 151 |
| **8LRH 62/14** | 75 | 55 | 106,2 | | 316 | 294 | 266 | 252 | 235 | 213 | 190 | 162 |
| **8LRH 62/15** | 90 | 66 | 126 | | 339 | 315 | 285 | 270 | 252 | 228 | 204 | 174 |
| **8LRH 62/16** | 90 | 66 | 126 | | 362 | 336 | 304 | 288 | 269 | 243 | 218 | 186 |
| **8LRH 62/17** | 90 | 66 | 126 | | 384 | 357 | 323 | 306 | 286 | 258 | 231 | 197 |
| **8LRH 62/18** | 100 | 75 | 143,2 | | 407 | 378 | 342 | 324 | 302 | 274 | 245 | 209 |
| **8LRH 62/19** | 100 | 75 | 143,2 | | 429 | 399 | 361 | 342 | 319 | 289 | 258 | 220 |
| **8LRH 62/20** | 100 | 75 | 143,2 | | 452 | 420 | 380 | 360 | 336 | 304 | 272 | 232 |
| **8LRH 62/21** | 125 | 92 | 175,1 | | 475 | 441 | 399 | 378 | 353 | 319 | 286 | 244 |
| **8LRH 62/22** | 125 | 92 | 175,1 | | 497 | 462 | 418 | 396 | 370 | 334 | 299 | 255 |
| **8LRH 62/23** | 125 | 92 | 175,1 | | 520 | 483 | 437 | 414 | 386 | 350 | 313 | 267 |
| **8LRH 62/24** | 125 | 92 | 175,1 | | 542 | 504 | 456 | 432 | 403 | 365 | 326 | 278 |

| | |
|---|---|
| **Max Eff. %** | 75 |
| **Max kW / St.** | 3,8 |

| **NPSH (m)** | Q=25% | Q=50% | Q=75% | Q=100% |
|---|---|---|---|---|
| | 3,6 | 3,6 | 6 | 8 |

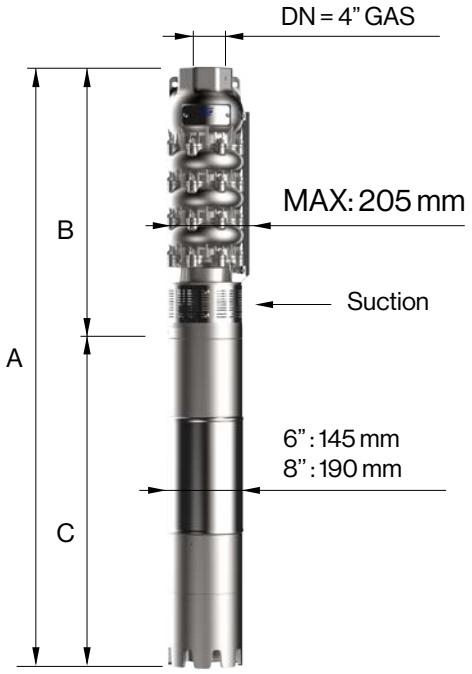


| TYPE 3~ | MOTOR BRACKET | DIMENSIONS (mm) | | | WEIGHT (kg) | |
|---|---|---|---|---|---|---|
| | | A | B | C | MOTOR | PUMP |
| **8LRH 62/13** | 8" NEMA | 2757 | 1524 | 1233 | 200 | 108 |
| **8LRH 62/14** | | 2845 | 1612 | 1233 | 200 | 115 |
| **8LRH 62/15** | | 3003 | 1700 | 1303 | 214 | 122 |
| **8LRH 62/16** | | 3091 | 1788 | 1303 | 214 | 129 |
| **8LRH 62/17** | | 3179 | 1876 | 1303 | 214 | 137 |
| **8LRH 62/18** | | 3347 | 1964 | 1383 | 230 | 144 |
| **8LRH 62/19** | | 3435 | 2052 | 1383 | 230 | 151 |
| **8LRH 62/20** | | 3523 | 2140 | 1383 | 230 | 158 |
| **8LRH 62/21** | | 3811 | 2228 | 1583 | 270 | 165 |
| **8LRH 62/22** | | 3899 | 2316 | 1583 | 270 | 172 |
| **8LRH 62/23** | | 3987 | 2404 | 1583 | 270 | 179 |
| **8LRH 62/24** | | 4075 | 2492 | 1583 | 270 | 187 |

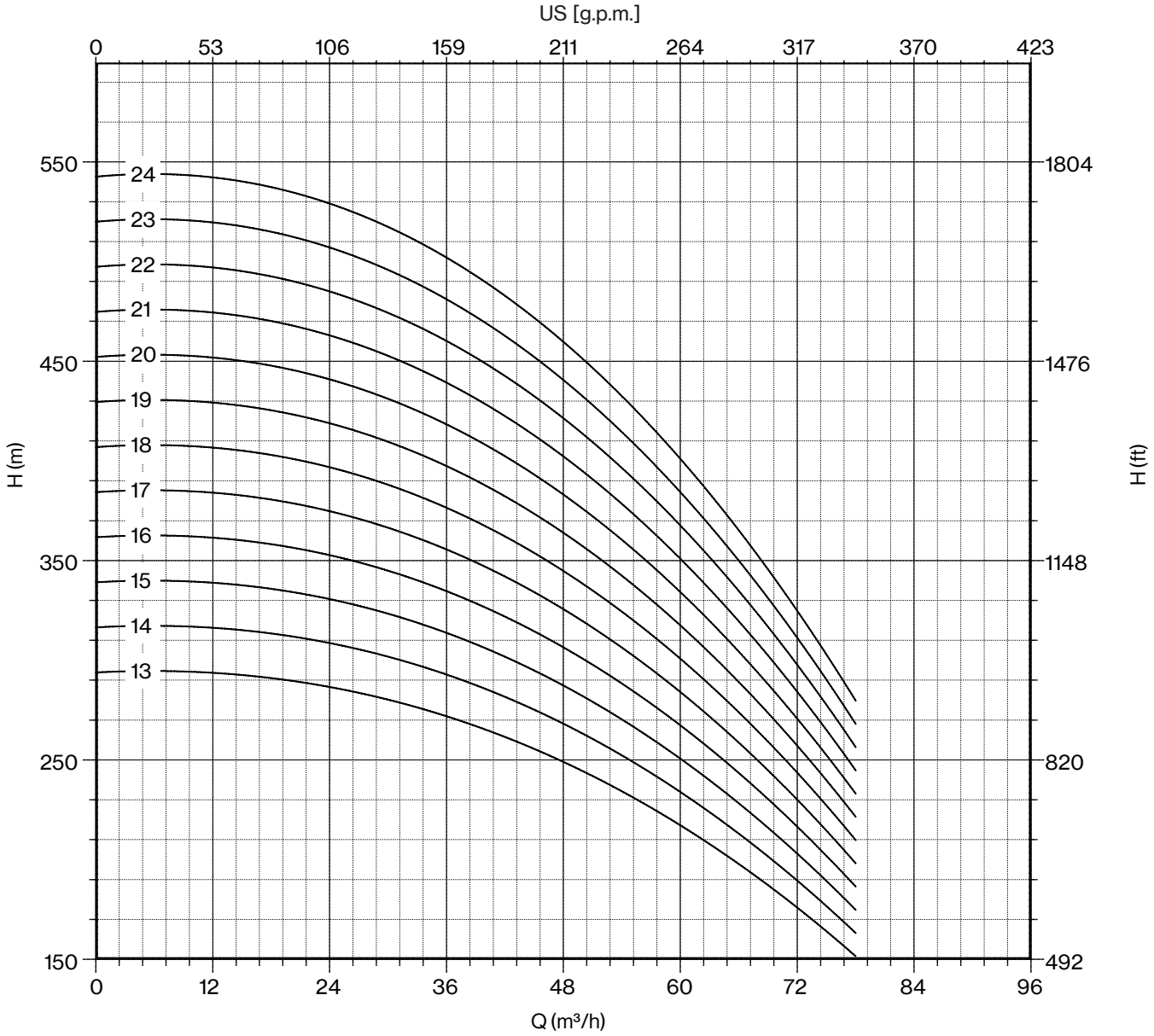
US [g.p.m.]
0
53
106
159
211
264
317
370
423
550
450
350
250
150
H (m)
1804
1476
1148
820
492
H (ft)
24
23
22
21
20
19
18
17
16
15
14
13
0
12
24
36
48
60
72
84
96
Q (m³/h)

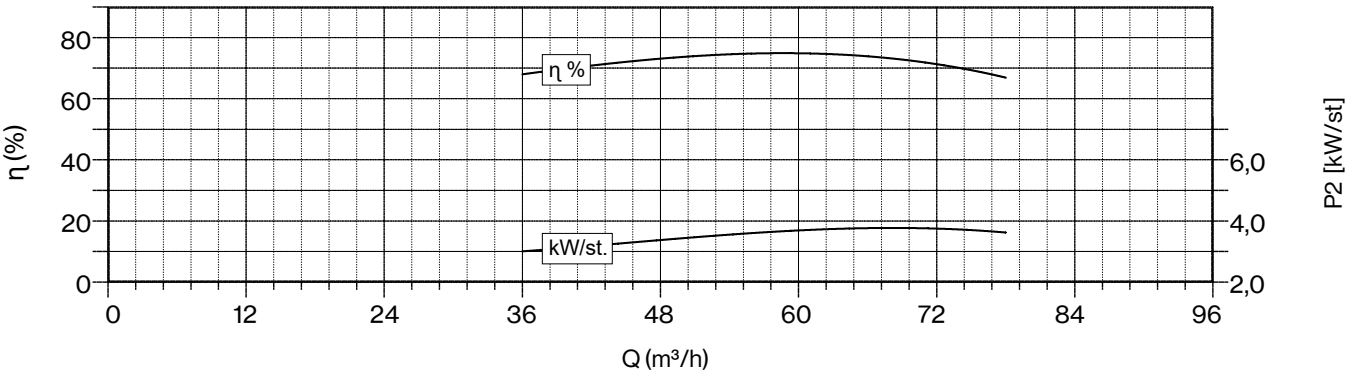
80
60
40
20
0
η (%)
η %
kW/st.
6,0
4,0
2,0
P2 [kW/st]
0
12
24
36
48
60
72
84
96
Q (m³/h)

# 8LM 80

| 50 Hz - 2900 rpm | | | | | Q | | | | | | | | |
|---|---|---|---|---|---|---|---|---|---|---|---|---|---|
| TYPE | SUITABLE MOTOR 3~ 400V | | | l/min | 0 | 300 | 400 | 600 | 800 | 1000 | 1200 | 1400 | 1600 |
| | P2 | | CURRENT | l/sec | 0 | 5,0 | 6,7 | 10,0 | 13,3 | 16,7 | 20,0 | 23,3 | 26,7 |
| | HP | kW | A | m³/h | 0 | 18 | 24 | 36 | 48 | 60 | 72 | 84 | 96 |
| **8LM 80/01** | 10 | 7,5 | 16,3 | H (m) | 27 | 26 | 26 | 24 | 23 | 22 | 20 | 18 | 15 |
| **8LM 80/02** | 17,5 | 13 | 27,3 | | 54 | 53 | 51 | 49 | 47 | 44 | 40 | 35 | 30 |
| **8LM 80/03** | 25 | 18,5 | 38,3 | | 81 | 79 | 77 | 73 | 70 | 65 | 60 | 53 | 44 |
| **8LM 80/04** | 35 | 26 | 52,9 | | 108 | 105 | 103 | 97 | 93 | 87 | 80 | 70 | 59 |
| **8LM 80/05** | 40 | 30 | 61,1 | | 135 | 132 | 129 | 122 | 117 | 109 | 100 | 88 | 74 |
| **8LM 80/06** | 50 | 37 | 75,8 | | 162 | 158 | 154 | 146 | 140 | 131 | 120 | 105 | 89 |
| **8LM 80/07** | 60 | 45 | 86,3 | | 189 | 184 | 180 | 170 | 163 | 153 | 140 | 123 | 104 |
| **8LM 80/08** | 75 | 55 | 106,2 | | 216 | 210 | 206 | 194 | 186 | 174 | 160 | 140 | 118 |
| **8LM 80/09** | 75 | 55 | 106,2 | | 243 | 237 | 231 | 219 | 210 | 196 | 180 | 158 | 133 |
| **8LM 80/10** | 90 | 66 | 126,0 | | 270 | 263 | 257 | 243 | 233 | 218 | 200 | 175 | 148 |

| | |
|---|---|
| **Max Eff. %** | 74 |
| **Max kW / St.** | 5,75 |

| **NPSH (m)** | Q=25% | Q=50% | Q=75% | Q=100% |
|---|---|---|---|---|
| | 3 | 3 | 3,5 | 4,5 |

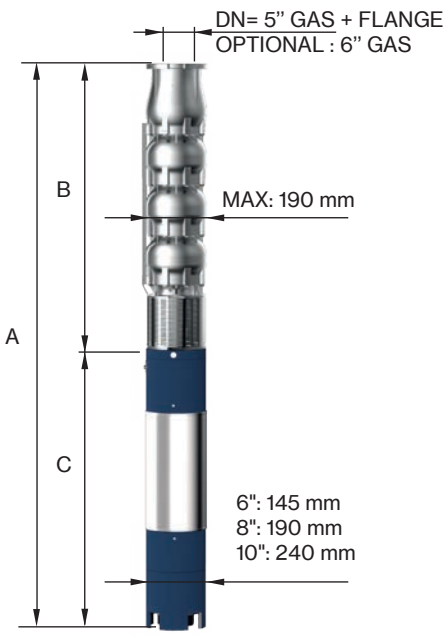


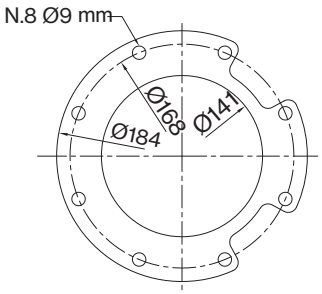


FOR COMMERCIAL TUBE
EXTERNAL DIAMETER: 139,7 mm

| TYPE 3~ | MOTOR BRACKET | DIMENSIONS (mm) | | | WEIGHT (kg) | |
|---|---|---|---|---|---|---|
| | | A | B | C | MOTOR | PUMP |
| **8LM 80/01-6** | 6" NEMA | 1164 | 463 | 701 | 55 | 19 |
| **8LM 80/02-6** | | 1429 | 588 | 841 | 70 | 25 |
| **8LM 80/03-6** | | 1704 | 713 | 991 | 83 | 32 |
| **8LM 80/04-6** | | 2019 | 838 | 1181 | 100 | 38 |
| **8LM 80/05-6** | | 2214 | 963 | 1251 | 108 | 45 |
| **8LM 80/06-6** | | 2429 | 1088 | 1341 | 118 | 51 |
| **8LM 80/07** | 8" NEMA | 2336 | 1213 | 1123 | 178 | 58 |
| **8LM 80/08** | | 2633 | 1400 | 1233 | 200 | 65 |
| **8LM 80/09** | | 2758 | 1525 | 1233 | 200 | 71 |
| **8LM 80/10** | | 2952 | 1650 | 1302 | 214 | 78 |

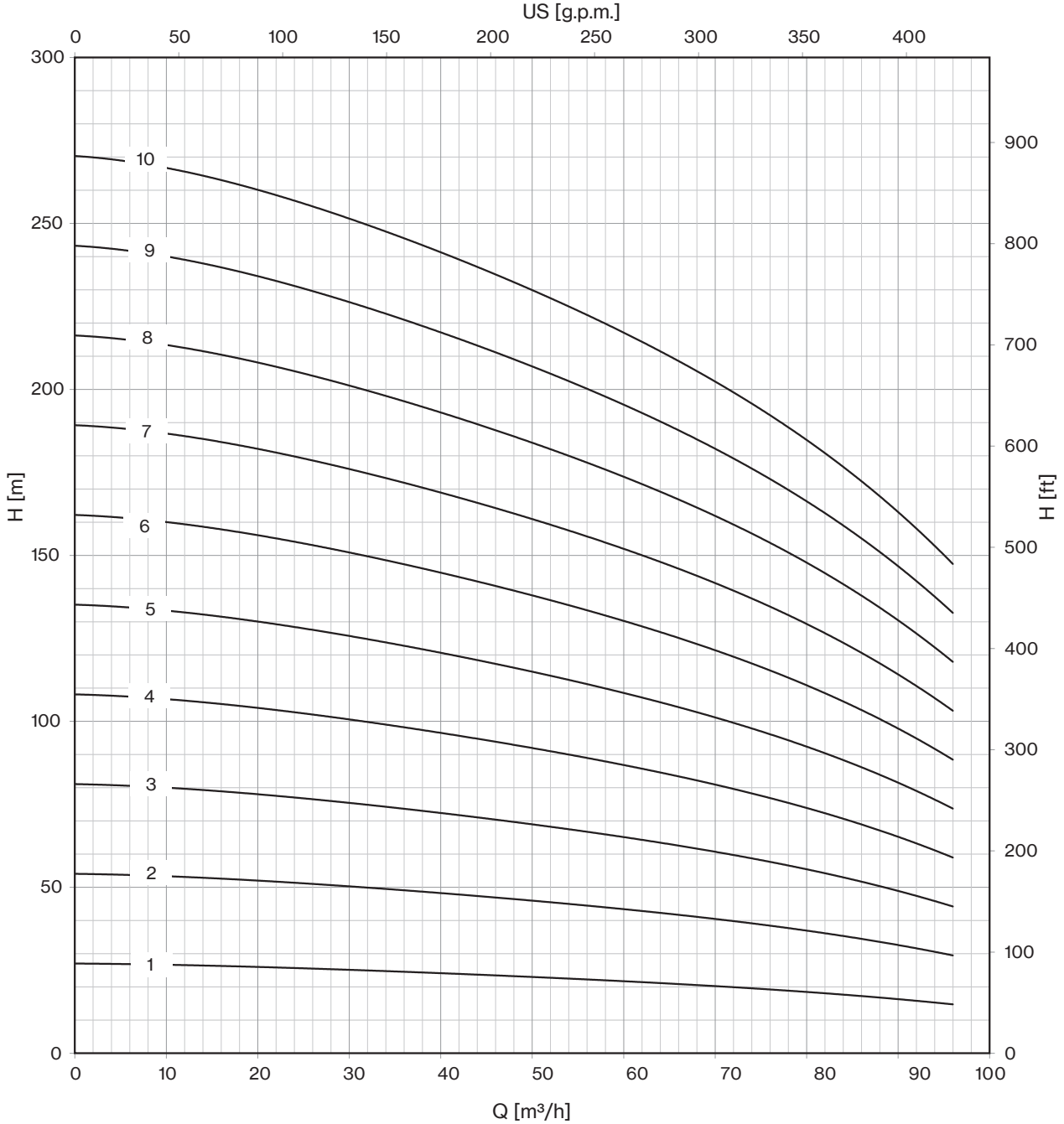
US [g.p.m.]
0
50
100
150
200
250
300
350
400
H [m]
300
250
200
150
100
50
0
H [ft]
900
800
700
600
500
400
300
200
100
0
10
9
8
7
6
5
4
3
2
1
0
10
20
30
40
50
60
70
80
90
100
Q [m³/h]

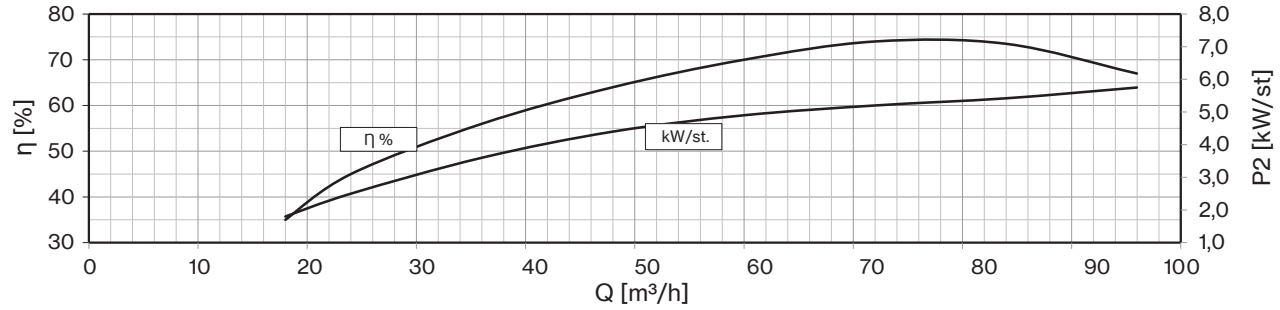
η [%]
80
70
60
50
40
30
P2 [kW/st]
8,0
7,0
6,0
5,0
4,0
3,0
2,0
1,0
η %
kW/st.
0
10
20
30
40
50
60
70
80
90
100
Q [m³/h]

# 8LM 80

| 50 Hz - 2900 rpm | | | | | Q | | | | | | | | |
|---|---|---|---|---|---|---|---|---|---|---|---|---|---|
| TYPE | SUITABLE MOTOR 3~ 400V | | | l/min | 0 | 300 | 400 | 600 | 800 | 1000 | 1200 | 1400 | 1600 |
| | P2 | | CURRENT | l/sec | 0 | 5,0 | 6,7 | 10,0 | 13,3 | 16,7 | 20,0 | 23,3 | 26,7 |
| | HP | kW | A | m³/h | 0 | 18 | 24 | 36 | 48 | 60 | 72 | 84 | 96 |
| **8LM 80/11** | 90 | 66 | 126,0 | H (m) | 297 | 289 | 283 | 267 | 256 | 240 | 220 | 193 | 163 |
| **8LM 80/12** | 100 | 75 | 143,2 | | 324 | 316 | 308 | 292 | 280 | 262 | 240 | 210 | 178 |
| **8LM 80/13** | 100 | 75 | 143,2 | | 351 | 342 | 334 | 316 | 303 | 283 | 260 | 228 | 192 |
| **8LM 80/14** | 125 | 92 | 175,1 | | 378 | 368 | 360 | 340 | 326 | 305 | 280 | 245 | 207 |
| **8LM 80/15** | 125 | 92 | 175,1 | | 405 | 395 | 386 | 365 | 350 | 327 | 300 | 263 | 222 |
| **8LM 80/16** | 125 | 92 | 175,1 | | 432 | 421 | 411 | 389 | 373 | 349 | 320 | 280 | 237 |
| **8LM 80/17D** | 150 | 110 | 211,0 | | 459 | 447 | 437 | 413 | 396 | 371 | 340 | 298 | 252 |
| **8LM 80/18D** | 150 | 110 | 211,0 | | 486 | 473 | 463 | 437 | 419 | 392 | 360 | 315 | 266 |
| **8LM 80/19D** | 150 | 110 | 211,0 | | 513 | 500 | 488 | 462 | 443 | 414 | 380 | 333 | 281 |
| **8LM 80/20D** | 175 | 130 | 245,3 | | 540 | 526 | 514 | 486 | 466 | 436 | 400 | 350 | 296 |

| | |
|---|---|
| **Max Eff. %** | 74 |
| **Max kW / St.** | 5,75 |

| **NPSH (m)** | Q=25% | Q=50% | Q=75% | Q=100% |
|---|---|---|---|---|
| | 3 | 3 | 3,5 | 4,5 |

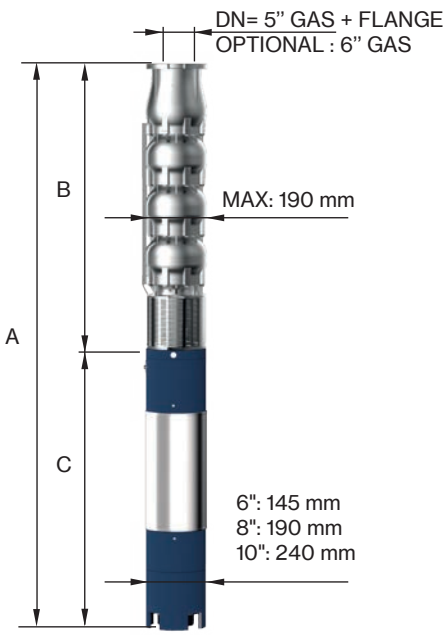


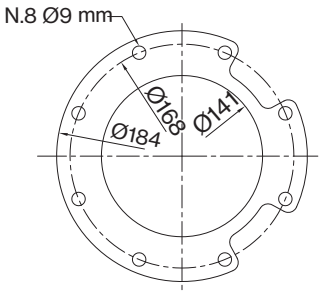


FOR COMMERCIAL TUBE
EXTERNAL DIAMETER: 139,7 mm

| TYPE 3~ | MOTOR BRACKET | DIMENSIONS (mm) | | | WEIGHT (kg) | |
|---|---|---|---|---|---|---|
| | | A | B | C | MOTOR | PUMP |
| **8LM 80/11** | 8" NEMA | 3077 | 1775 | 1302 | 214 | 84 |
| **8LM 80/12** | | 3283 | 1900 | 1383 | 230 | 90 |
| **8LM 80/13** | | 3408 | 2025 | 1383 | 230 | 97 |
| **8LM 80/14** | | 3733 | 2150 | 1583 | 270 | 103 |
| **8LM 80/15** | | 3858 | 2275 | 1583 | 270 | 110 |
| **8LM 80/16** | | 3983 | 2400 | 1583 | 270 | 116 |
| **8LM 80/17D** | | 4258 | 2525 | 1733 | 300 | 123 |
| **8LM 80/18D** | | 4383 | 2650 | 1733 | 300 | 129 |
| **8LM 80/19D** | | 4508 | 2775 | 1733 | 300 | 136 |
| **8LM 80/20D-10** | 10" | 4534 | 2900 | 1634 | 385 | 142 |

*"D" Pump shaft in Duplex EN 1.4462*

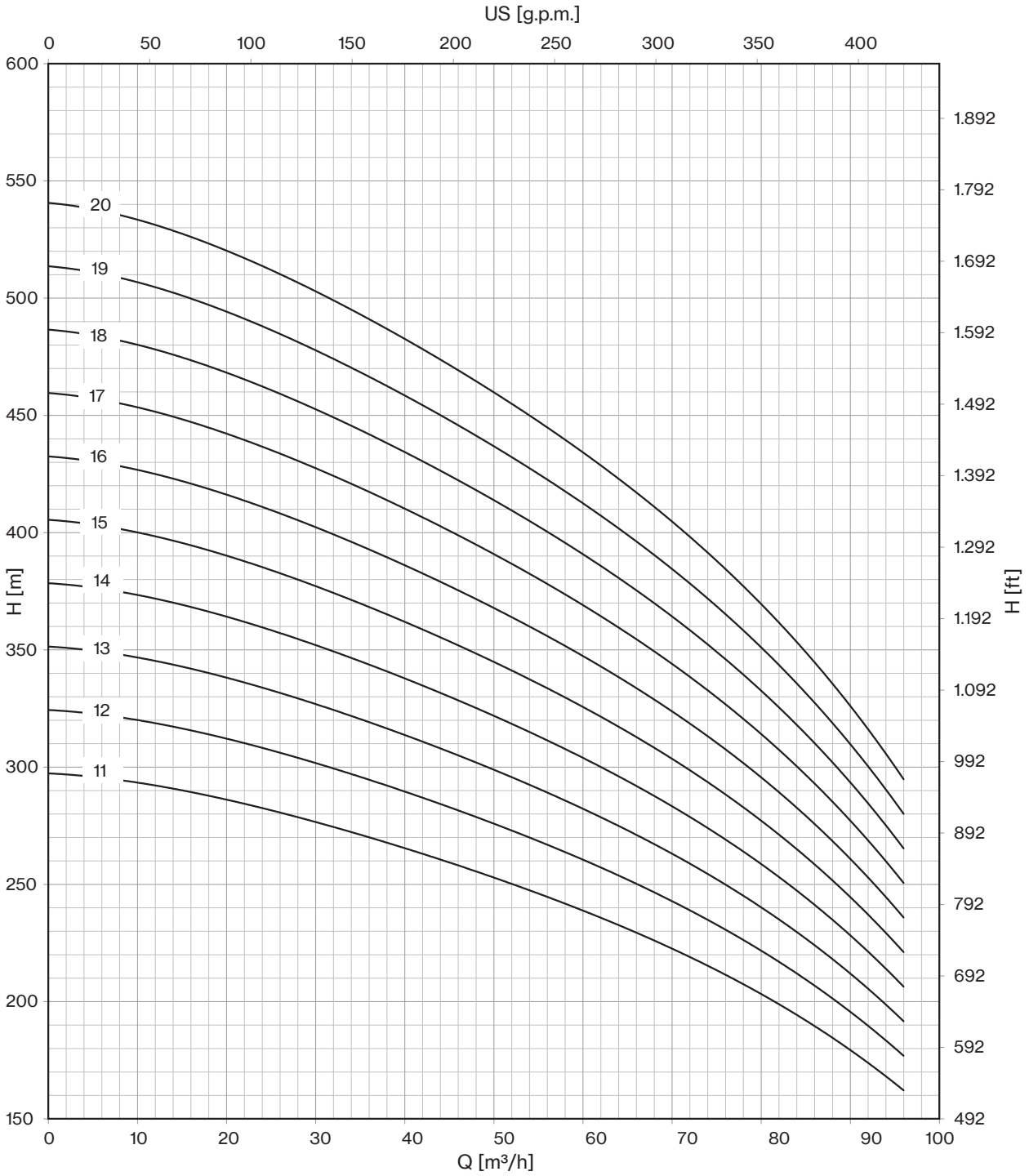
US [g.p.m.]
0
50
100
150
200
250
300
350
400
H [m]
600
550
500
450
400
350
300
250
200
150
H [ft]
1.892
1.792
1.692
1.592
1.492
1.392
1.292
1.192
1.092
992
892
792
692
592
492
20
19
18
17
16
15
14
13
12
11
0
10
20
30
40
50
60
70
80
90
100
Q [m³/h]

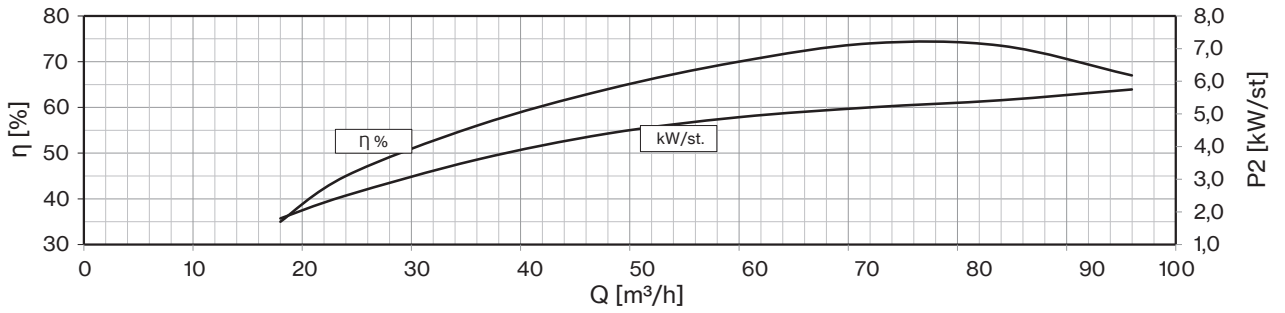
η [%]
80
70
60
50
40
30
P2 [kW/st]
8,0
7,0
6,0
5,0
4,0
3,0
2,0
1,0
η %
kW/st.
0
10
20
30
40
50
60
70
80
90
100
Q [m³/h]

# 8LM 92

| 50 Hz - 2900 rpm | | | | | Q | | | | | | | | |
|---|---|---|---|---|---|---|---|---|---|---|---|---|---|
| TYPE | SUITABLE MOTOR 3~ 400V | | | l/min | 0 | 300 | 800 | 1000 | 1200 | 1400 | 1600 | 1800 | 2000 |
| | P2 | | CURRENT | l/sec | 0 | 5,0 | 13,3 | 16,7 | 20,0 | 23,3 | 26,7 | 30,0 | 33,3 |
| | HP | kW | A | m³/h | 0 | 18 | 48 | 60 | 72 | 84 | 96 | 108 | 120 |
| **8LM 92/01** | 10 | 7,5 | 16,3 | H (m) | 27 | 26 | 24 | 23 | 22 | 20 | 18 | 16 | 13 |
| **8LM 92/02** | 17,5 | 13 | 27,3 | | 54 | 53 | 49 | 47 | 44 | 40 | 36 | 31 | 25 |
| **8LM 92/03** | 30 | 22 | 45,1 | | 81 | 79 | 73 | 70 | 65 | 60 | 54 | 47 | 38 |
| **8LM 92/04** | 35 | 26 | 52,9 | | 108 | 105 | 97 | 93 | 87 | 80 | 72 | 62 | 50 |
| **8LM 92/05** | 50 | 37 | 75,8 | | 135 | 132 | 122 | 117 | 109 | 101 | 90 | 78 | 63 |
| **8LM 92/06** | 60 | 45 | 86,3 | | 162 | 158 | 146 | 140 | 131 | 121 | 107 | 93 | 76 |
| **8LM 92/07** | 75 | 55 | 106,2 | | 189 | 184 | 170 | 163 | 153 | 141 | 125 | 109 | 88 |
| **8LM 92/08** | 75 | 55 | 106,2 | | 216 | 210 | 194 | 186 | 174 | 161 | 143 | 124 | 101 |
| **8LM 92/09** | 90 | 66 | 126,0 | | 243 | 237 | 219 | 210 | 196 | 181 | 161 | 140 | 113 |
| **8LM 92/10** | 90 | 66 | 126,0 | | 270 | 263 | 243 | 233 | 218 | 201 | 179 | 155 | 126 |

| | |
|---|---|
| **Max Eff. %** | 75 |
| **Max kW / St.** | 6,47 |

| **NPSH (m)** | Q=25% | Q=50% | Q=75% | Q=100% |
|---|---|---|---|---|
| | 2,5 | 2,9 | 3,9 | 7,8 |

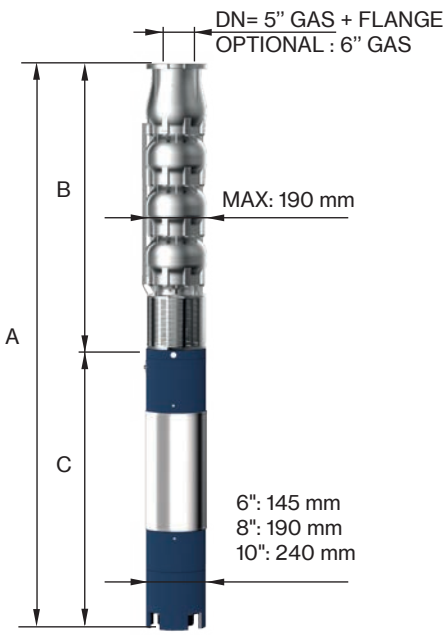


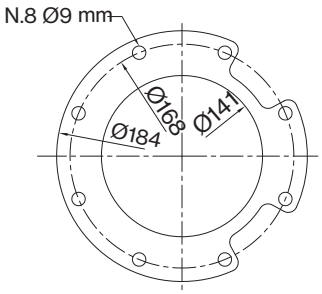


FOR COMMERCIAL TUBE
EXTERNAL DIAMETER: 139,7 mm

| TYPE 3~ | MOTOR BRACKET | DIMENSIONS (mm) | | | WEIGHT (kg) | |
|---|---|---|---|---|---|---|
| | | A | B | C | MOTOR | PUMP |
| **8LM 92/01-6** | 6" NEMA | 1164 | 463 | 701 | 55 | 19 |
| **8LM 92/02-6** | | 1429 | 588 | 841 | 70 | 26 |
| **8LM 92/03-6** | | 1784 | 713 | 1071 | 92 | 32 |
| **8LM 92/04-6** | | 2019 | 838 | 1181 | 100 | 39 |
| **8LM 92/05-6** | | 2304 | 963 | 1341 | 118 | 46 |
| **8LM 92/06** | 8" NEMA | 2211 | 1088 | 1123 | 178 | 53 |
| **8LM 92/07** | | 2508 | 1275 | 1233 | 200 | 60 |
| **8LM 92/08** | | 2633 | 1400 | 1233 | 200 | 67 |
| **8LM 92/09** | | 2827 | 1525 | 1302 | 214 | 74 |
| **8LM 92/10** | | 2952 | 1650 | 1302 | 214 | 81 |

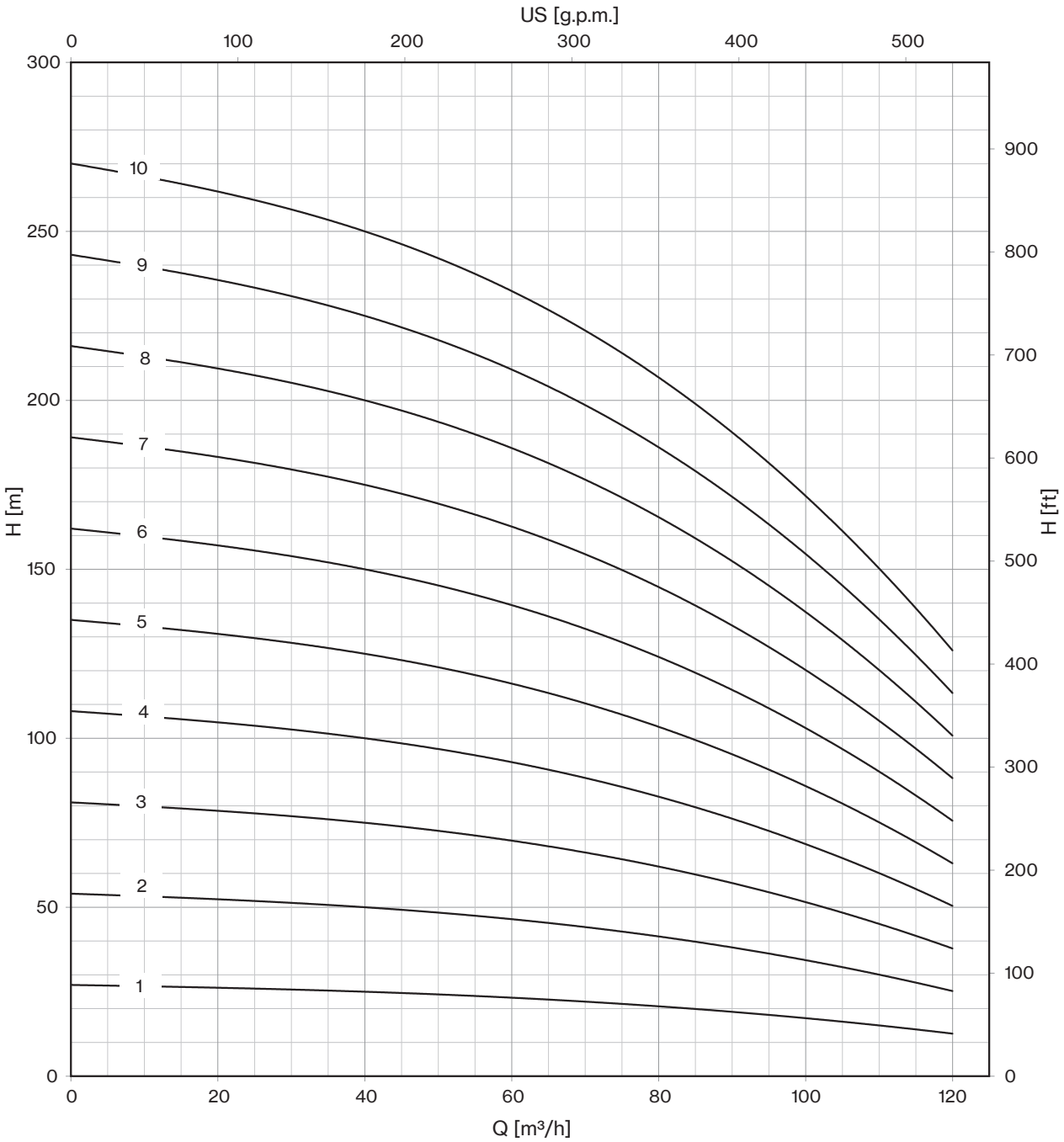
US [g.p.m.]
0
100
200
300
400
500
H [m]
300
250
200
150
100
50
0
H [ft]
900
800
700
600
500
400
300
200
100
0
10
9
8
7
6
5
4
3
2
1
0
20
40
60
80
100
120
Q [m³/h]

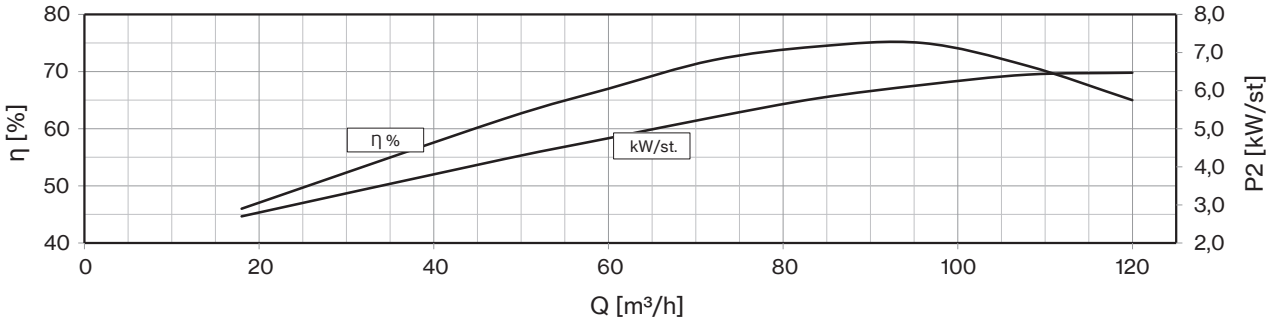
η [%]
80
70
60
50
40
P2 [kW/st]
8,0
7,0
6,0
5,0
4,0
3,0
2,0
Η %
kW/st.
0
20
40
60
80
100
120
Q [m³/h]

# 8LM 92

| 50 Hz - 2900 rpm | | | | | Q | | | | | | | | |
|---|---|---|---|---|---|---|---|---|---|---|---|---|---|
| TYPE | SUITABLE MOTOR 3~ 400V | | | l/min | 0 | 300 | 800 | 1000 | 1200 | 1400 | 1600 | 1800 | 2000 |
| | P2 | | CURRENT | l/sec | 0 | 5,0 | 13,3 | 16,7 | 20,0 | 23,3 | 26,7 | 30,0 | 33,3 |
| | HP | kW | A | m³/h | 0 | 18 | 48 | 60 | 72 | 84 | 96 | 108 | 120 |
| **8LM 92/11** | 100 | 75 | 143,2 | H (m) | 297 | 289 | 267 | 256 | 240 | 221 | 197 | 171 | 139 |
| **8LM 92/12** | 125 | 92 | 175,1 | | 324 | 316 | 292 | 280 | 262 | 241 | 215 | 186 | 151 |
| **8LM 92/13** | 125 | 92 | 175,1 | | 351 | 342 | 316 | 303 | 283 | 261 | 233 | 202 | 164 |
| **8LM 92/14** | 125 | 92 | 175,1 | | 378 | 368 | 340 | 326 | 305 | 281 | 251 | 217 | 176 |
| **8LM 92/15D** | 150 | 110 | 211,0 | | 405 | 395 | 365 | 350 | 327 | 302 | 269 | 233 | 189 |
| **8LM 92/16D** | 150 | 110 | 211,0 | | 432 | 421 | 389 | 373 | 349 | 322 | 286 | 248 | 202 |
| **8LM 92/17D** | 150 | 110 | 211,0 | | 459 | 447 | 413 | 396 | 371 | 342 | 304 | 264 | 214 |
| **8LM 92/18D** | 175 | 130 | 245,3 | | 486 | 473 | 437 | 419 | 392 | 362 | 322 | 279 | 227 |
| **8LM 92/19D** | 175 | 130 | 245,3 | | 513 | 500 | 462 | 443 | 414 | 382 | 340 | 295 | 239 |
| **8LM 92/20D** | 175 | 130 | 245,3 | | 540 | 526 | 486 | 466 | 436 | 402 | 358 | 310 | 252 |

| | |
|---|---|
| **Max Eff. %** | 75 |
| **Max kW / St.** | 6,5 |

| **NPSH (m)** | Q=25% | Q=50% | Q=75% | Q=100% |
|---|---|---|---|---|
| | 2,5 | 2,9 | 3,9 | 7,8 |

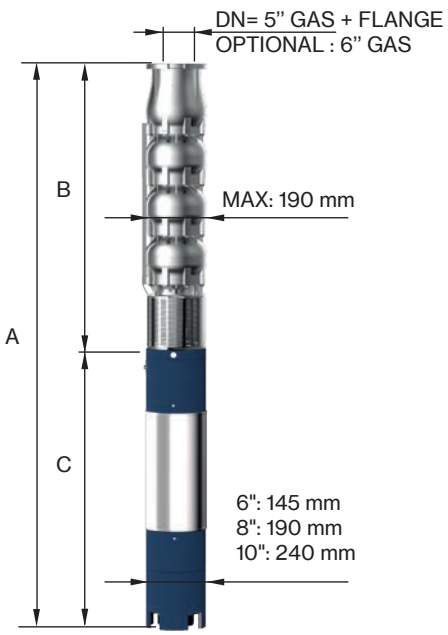


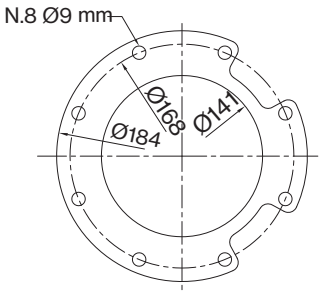


FOR COMMERCIAL TUBE
EXTERNAL DIAMETER: 139,7 mm

| TYPE 3~ | MOTOR BRACKET | DIMENSIONS (mm) | | | WEIGHT (kg) | |
|---|---|---|---|---|---|---|
| | | A | B | C | MOTOR | PUMP |
| **8LM 92/11** | 8" NEMA | 3158 | 1775 | 1383 | 230 | 88 |
| **8LM 92/12** | | 3483 | 1900 | 1583 | 270 | 94 |
| **8LM 92/13** | | 3608 | 2025 | 1583 | 270 | 101 |
| **8LM 92/14** | | 3733 | 2150 | 1583 | 270 | 108 |
| **8LM 92/15D** | | 4008 | 2275 | 1733 | 300 | 115 |
| **8LM 92/16D** | | 4133 | 2400 | 1733 | 300 | 122 |
| **8LM 92/17D** | | 4258 | 2525 | 1733 | 300 | 128 |
| **8LM 92/18D-10** | 10" | 4284 | 2650 | 1634 | 385 | 138 |
| **8LM 92/19D-10** | | 4409 | 2775 | 1634 | 385 | 145 |
| **8LM 92/20D-10** | | 4534 | 2900 | 1634 | 385 | 152 |

*"D" Pump shaft in Duplex EN 1.4462*

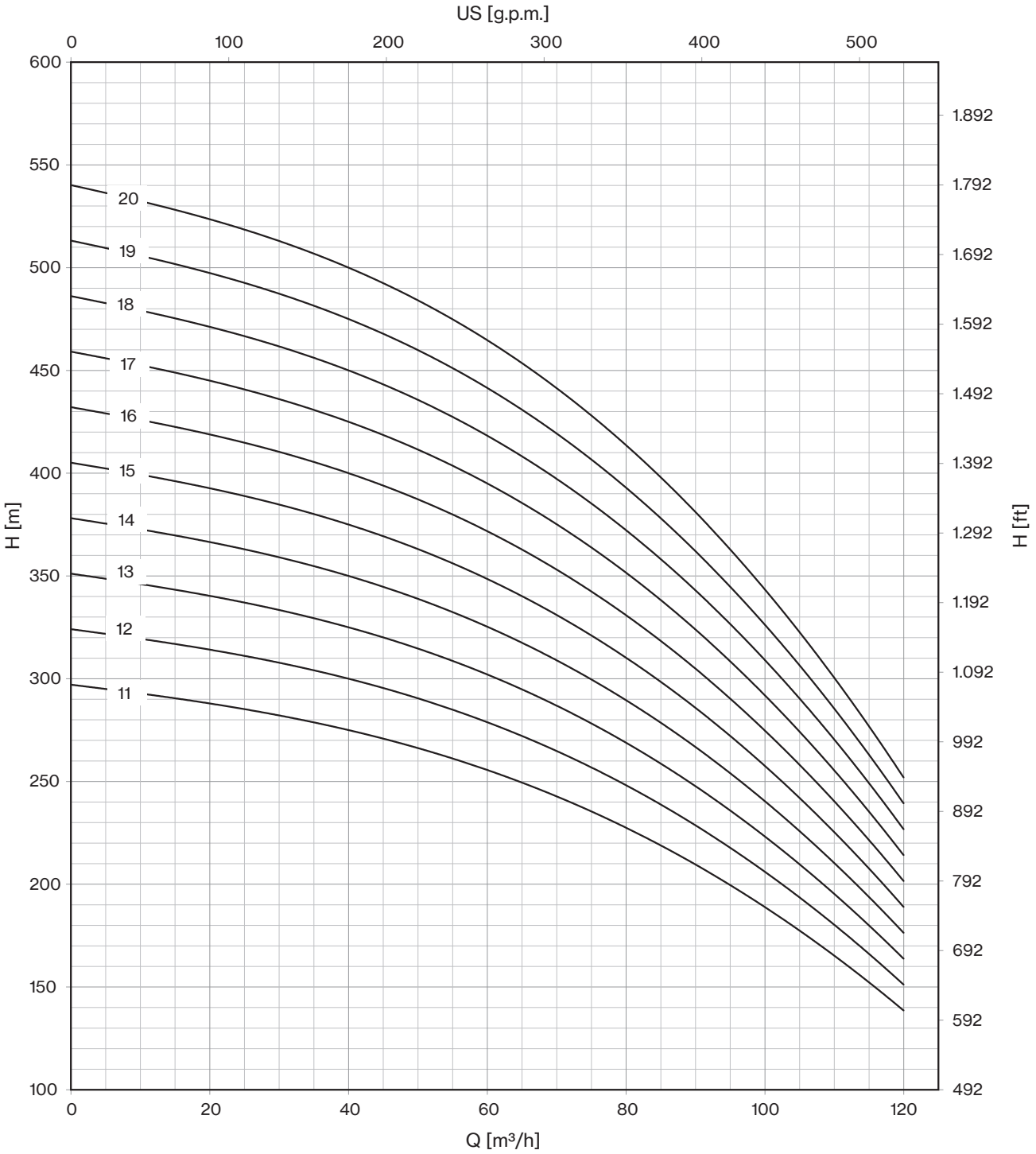
US [g.p.m.]
0
100
200
300
400
500
H [m]
600
550
500
450
400
350
300
250
200
150
100
H [ft]
1.892
1.792
1.692
1.592
1.492
1.392
1.292
1.192
1.092
992
892
792
692
592
492
20
19
18
17
16
15
14
13
12
11
0
20
40
60
80
100
120
Q [m³/h]

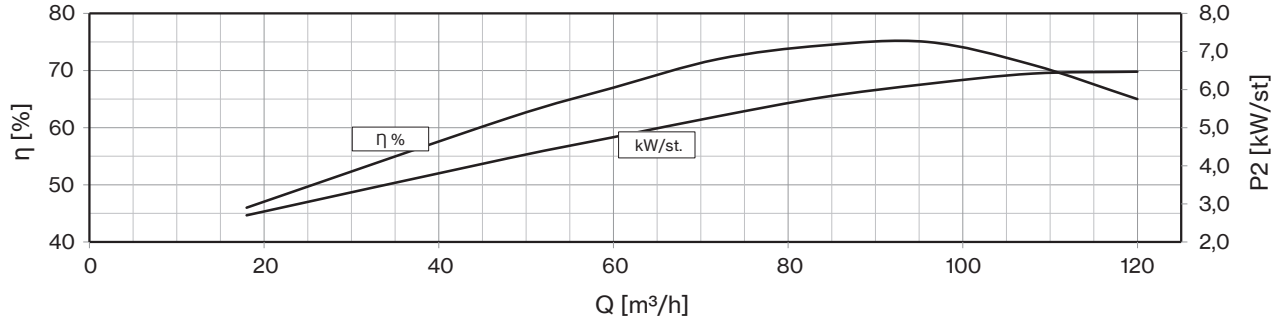
η [%]
80
70
60
50
40
P2 [kW/st]
8,0
7,0
6,0
5,0
4,0
3,0
2,0
η %
kW/st.
0
20
40
60
80
100
120
Q [m³/h]

# 8LM 110

| 50 Hz - 2900 rpm | | | | | Q | | | | | | | | |
|---|---|---|---|---|---|---|---|---|---|---|---|---|---|
| TYPE | SUITABLE MOTOR 3~ 400V | | | l/min | 0 | 600 | 1200 | 1400 | 1600 | 1800 | 2000 | 2200 | 2400 |
| | P2 | | CURRENT | l/sec | 0 | 10,0 | 20,0 | 23,3 | 26,7 | 30,0 | 33,3 | 36,7 | 40,0 |
| | HP | kW | A | m³/h | 0 | 36 | 72 | 84 | 96 | 108 | 120 | 132 | 144 |
| **8LM 110/01** | 10 | 7,5 | 16,3 | H (m) | 28 | 25 | 22 | 21 | 20 | 19 | 17 | 15 | 13 |
| **8LM 110/02** | 20 | 15 | 31,5 | | 55 | 51 | 44 | 42 | 41 | 38 | 35 | 31 | 26 |
| **8LM 110/03** | 30 | 22 | 45,1 | | 83 | 76 | 65 | 63 | 61 | 57 | 52 | 46 | 38 |
| **8LM 110/04** | 40 | 30 | 61,1 | | 110 | 101 | 87 | 84 | 82 | 76 | 69 | 62 | 51 |
| **8LM 110/05** | 50 | 37 | 75,8 | | 138 | 127 | 109 | 106 | 102 | 96 | 87 | 77 | 64 |
| **8LM 110/06** | 60 | 45 | 86,3 | | 165 | 152 | 131 | 127 | 122 | 115 | 104 | 92 | 77 |
| **8LM 110/07** | 75 | 55 | 106,2 | | 193 | 177 | 153 | 148 | 143 | 134 | 121 | 108 | 90 |

| | |
|---|---|
| **Max Eff. %** | 77 |
| **Max kW / St.** | 7,2 |

| **NPSH (m)** | Q=25% | Q=50% | Q=75% | Q=100% |
|---|---|---|---|---|
| | 2,5 | 2,9 | 3,9 | 7,8 |

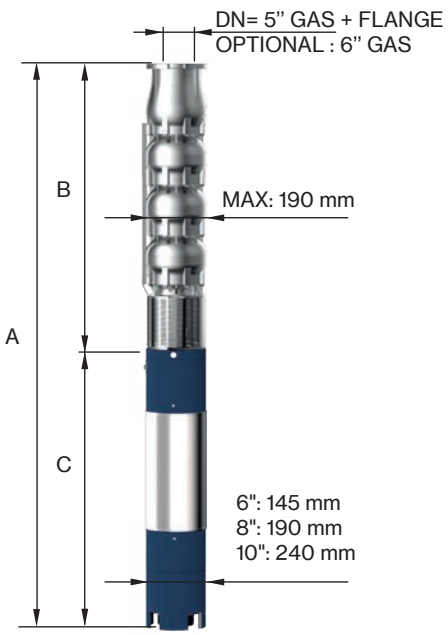


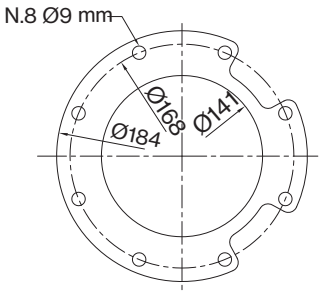


FOR COMMERCIAL TUBE
EXTERNAL DIAMETER: 139,7 mm

| TYPE 3~ | MOTOR BRACKET | DIMENSIONS (mm) | | | WEIGHT (kg) | |
|---|---|---|---|---|---|---|
| | | A | B | C | MOTOR | PUMP |
| **8LM 110/01-6** | 6" NEMA | 1164 | 463 | 701 | 55 | 19 |
| **8LM 110/02-6** | | 1519 | 588 | 931 | 75 | 26 |
| **8LM 110/03-6** | | 1784 | 713 | 1071 | 92 | 32 |
| **8LM 110/04-6** | | 2089 | 838 | 1251 | 108 | 39 |
| **8LM 110/05-6** | | 2304 | 963 | 1341 | 118 | 46 |
| **8LM 110/06** | 8" NEMA | 2273 | 1150 | 1123 | 178 | 54 |
| **8LM 110/07** | | 2508 | 1275 | 1233 | 200 | 60 |

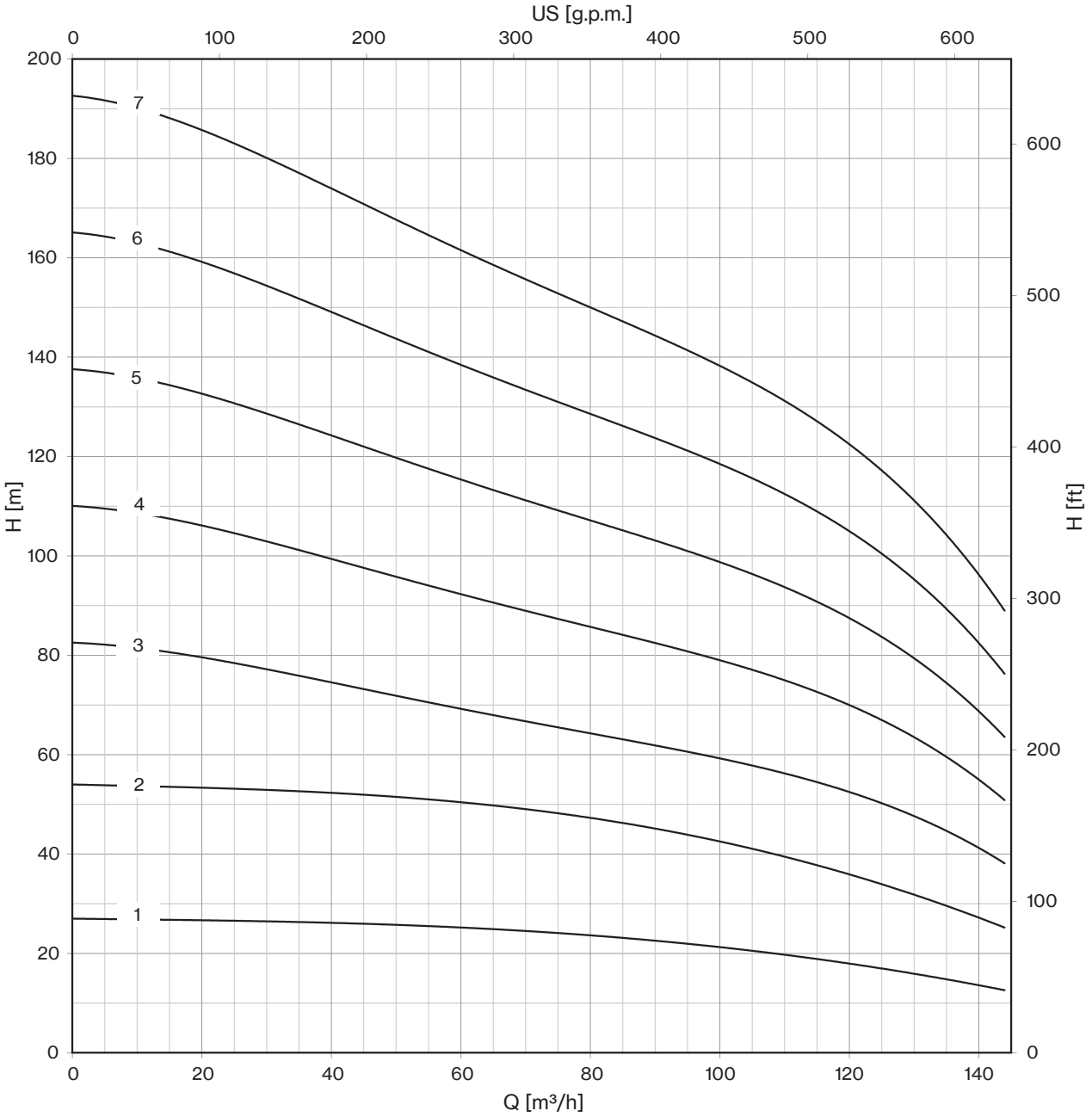
US [g.p.m.]
0
100
200
300
400
500
600
H [m]
H [ft]
200
180
160
140
120
100
80
60
40
20
0
600
500
400
300
200
100
0
7
6
5
4
3
2
1
0
20
40
60
80
100
120
140
Q [m³/h]

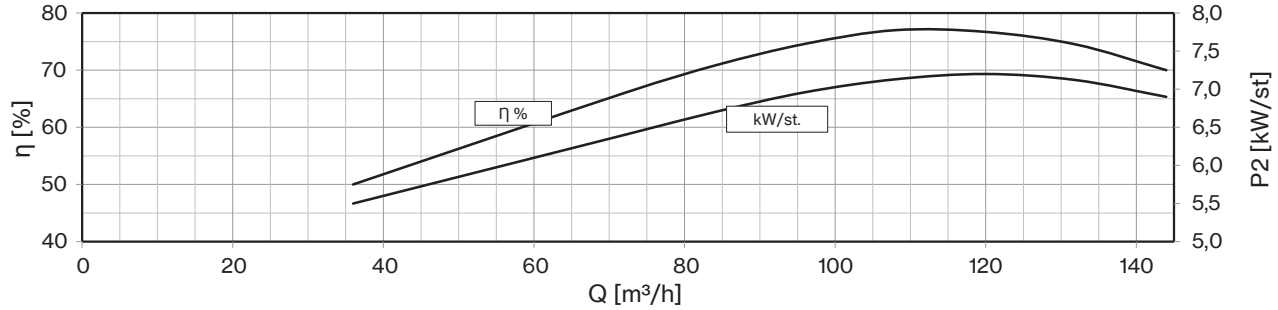
η [%]
P2 [kW/st]
80
70
60
50
40
8,0
7,5
7,0
6,5
6,0
5,5
5,0
η %
kW/st.
0
20
40
60
80
100
120
140
Q [m³/h]

# 8LM 110

| 50 Hz - 2900 rpm | | | | | Q | | | | | | | | |
|---|---|---|---|---|---|---|---|---|---|---|---|---|---|
| TYPE | SUITABLE MOTOR 3~ 400V | | | l/min | 0 | 600 | 1200 | 1400 | 1600 | 1800 | 2000 | 2200 | 2400 |
| | P2 | | CURRENT | l/sec | 0 | 10,0 | 20,0 | 23,3 | 26,7 | 30,0 | 33,3 | 36,7 | 40,0 |
| | HP | kW | A | m³/h | 0 | 36 | 72 | 84 | 96 | 108 | 120 | 132 | 144 |
| **8LM 110/08** | 90 | 66 | 126,0 | H (m) | 220 | 202 | 174 | 169 | 163 | 153 | 138 | 123 | 102 |
| **8LM 110/09** | 90 | 66 | 126,0 | | 248 | 228 | 196 | 190 | 184 | 172 | 156 | 139 | 115 |
| **8LM 110/10** | 100 | 75 | 143,2 | | 275 | 253 | 218 | 211 | 204 | 191 | 173 | 154 | 128 |
| **8LM 110/11** | 125 | 92 | 175,1 | | 303 | 278 | 240 | 232 | 224 | 210 | 190 | 169 | 141 |
| **8LM 110/12** | 125 | 92 | 175,1 | | 330 | 304 | 262 | 253 | 245 | 229 | 208 | 185 | 154 |
| **8LM 110/13D** | 150 | 110 | 211,0 | | 358 | 329 | 283 | 274 | 265 | 248 | 225 | 200 | 166 |
| **8LM 110/14D** | 150 | 110 | 211,0 | | 385 | 354 | 305 | 295 | 286 | 267 | 242 | 216 | 179 |
| **8LM 110/15D** | 150 | 110 | 211,0 | | 413 | 380 | 327 | 317 | 306 | 287 | 260 | 231 | 192 |
| **8LM 110/16D** | 175 | 130 | 245,3 | | 440 | 405 | 349 | 338 | 326 | 306 | 277 | 246 | 205 |
| **8LM 110/17D** | 175 | 130 | 245,3 | | 468 | 430 | 371 | 359 | 347 | 325 | 294 | 262 | 218 |
| **8LM 110/18D** | 175 | 130 | 245,3 | | 495 | 455 | 392 | 380 | 367 | 344 | 311 | 277 | 230 |

| | |
|---|---|
| **Max Eff. %** | 77 |
| **Max kW / St.** | 7,2 |

| **NPSH (m)** | Q=25% | Q=50% | Q=75% | Q=100% |
|---|---|---|---|---|
| | 2,5 | 2,9 | 3,9 | 7,8 |

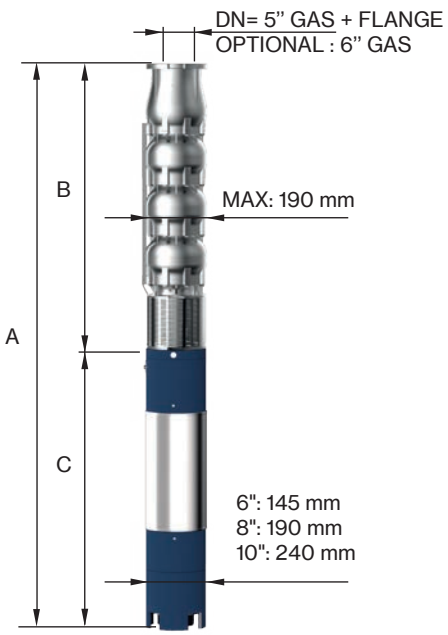


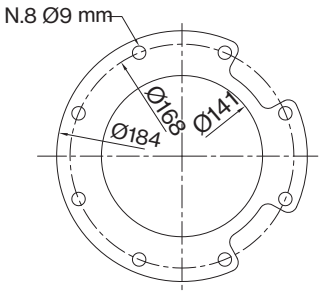


FOR COMMERCIAL TUBE
EXTERNAL DIAMETER: 139,7 mm

| TYPE 3~ | MOTOR BRACKET | DIMENSIONS (mm) | | | WEIGHT (kg) | |
|---|---|---|---|---|---|---|
| | | A | B | C | MOTOR | PUMP |
| **8LM 110/08** | 8" NEMA | 2702 | 1400 | 1302 | 214 | 67 |
| **8LM 110/09** | | 2827 | 1525 | 1302 | 214 | 74 |
| **8LM 110/10** | | 3033 | 1650 | 1383 | 230 | 81 |
| **8LM 110/11** | | 3358 | 1775 | 1583 | 270 | 88 |
| **8LM 110/12** | | 3483 | 1900 | 1583 | 270 | 94 |
| **8LM 110/13D** | | 3758 | 2025 | 1733 | 300 | 101 |
| **8LM 110/14D** | | 3883 | 2150 | 1733 | 300 | 108 |
| **8LM 110/15D** | | 4008 | 2275 | 1733 | 300 | 115 |
| **8LM 110/16D-10** | 10" | 4034 | 2400 | 1634 | 385 | 125 |
| **8LM 110/17D-10** | | 4159 | 2525 | 1634 | 385 | 132 |
| **8LM 110/18D-10** | | 4284 | 2650 | 1634 | 385 | 138 |

*"D" Pump shaft in Duplex EN 1.4462*

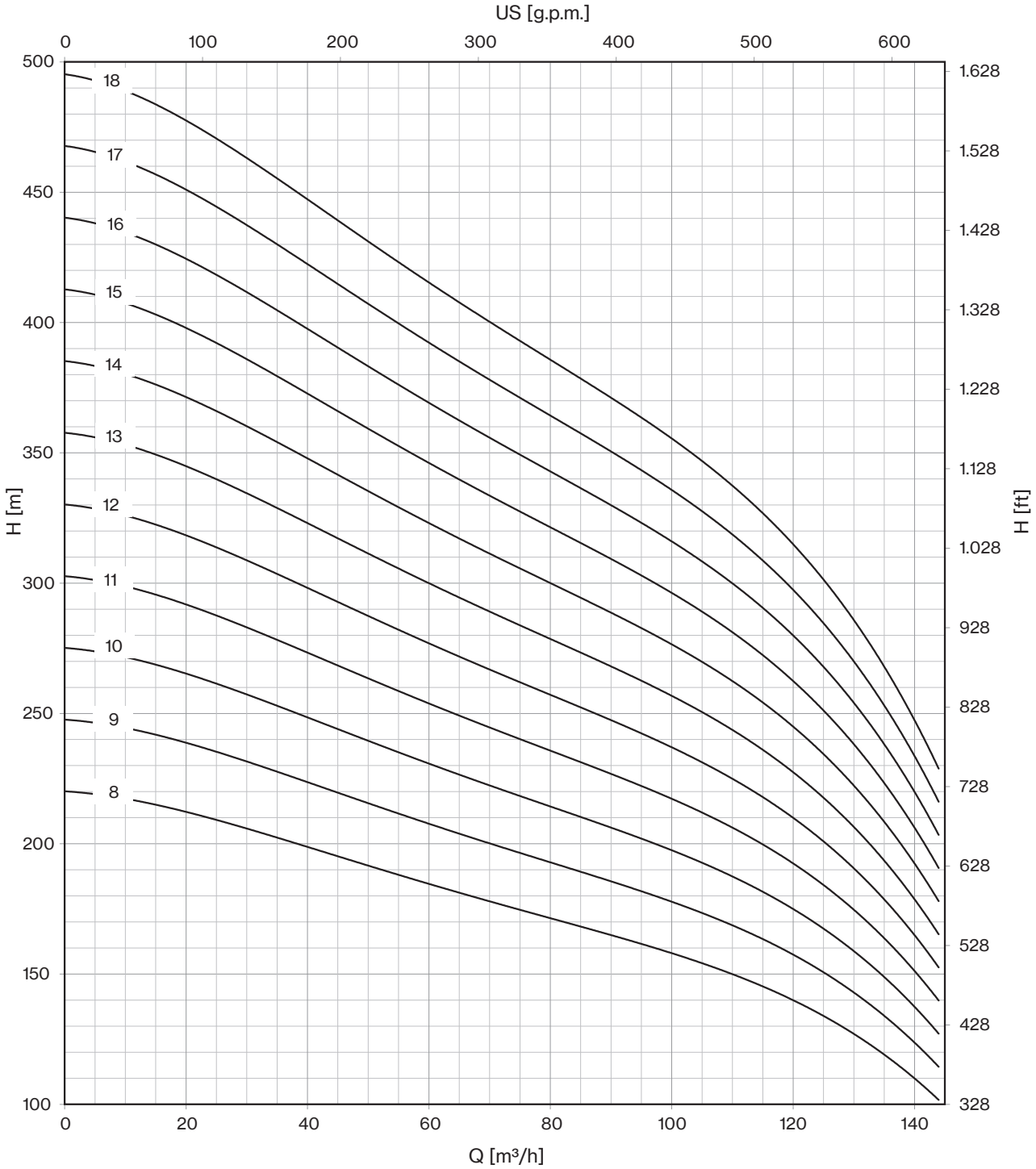
US [g.p.m.]
0
100
200
300
400
500
600
H [m]
500
450
400
350
300
250
200
150
100
H [ft]
1.628
1.528
1.428
1.328
1.228
1.128
1.028
928
828
728
628
528
428
328
18
17
16
15
14
13
12
11
10
9
8
0
20
40
60
80
100
120
140
Q [m³/h]

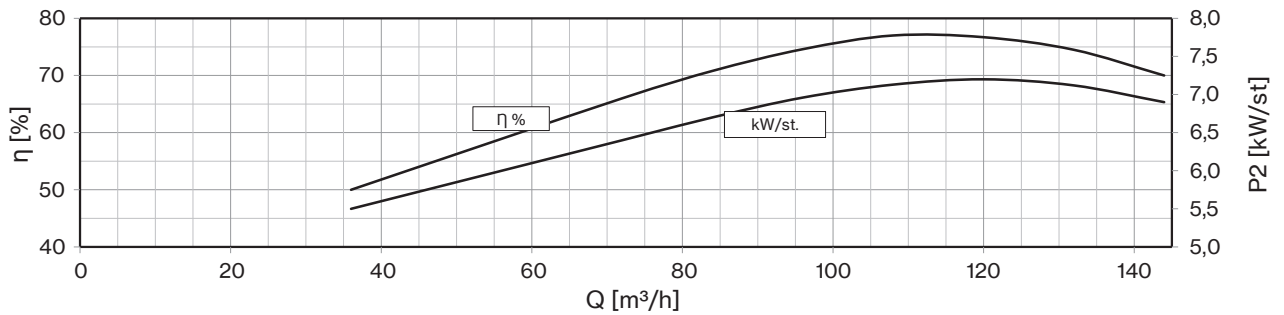
η [%]
80
70
60
50
40
P2 [kW/st]
8,0
7,5
7,0
6,5
6,0
5,5
5,0
η %
kW/st.
0
20
40
60
80
100
120
140
Q [m³/h]

# 8LM 130

| 50 Hz - 2900 rpm | | | | | Q | | | | | | | | |
|---|---|---|---|---|---|---|---|---|---|---|---|---|---|
| TYPE | SUITABLE MOTOR 3~ 400V | | | l/min | 0 | 600 | 1600 | 1800 | 2000 | 2200 | 2400 | 2600 | 2800 |
| | P2 | | CURRENT | l/sec | 0 | 10,0 | 26,7 | 30,0 | 33,3 | 36,7 | 40,0 | 43,3 | 46,7 |
| | HP | kW | A | m³/h | 0 | 36 | 96 | 108 | 120 | 132 | 144 | 156 | 168 |
| **8LM 130/01** | 12,5 | 9,2 | 19,9 | H (m) | 27 | 25 | 21 | 20 | 19 | 18 | 16 | 15 | 12 |
| **8LM 130/02** | 25 | 18,5 | 38,3 | | 54 | 49 | 41 | 40 | 38 | 36 | 33 | 29 | 24 |
| **8LM 130/03** | 35 | 26 | 52,9 | | 81 | 74 | 62 | 59 | 57 | 54 | 49 | 44 | 36 |
| **8LM 130/04** | 50 | 37 | 75,8 | | 108 | 98 | 83 | 79 | 76 | 72 | 66 | 58 | 48 |
| **8LM 130/05** | 60 | 45 | 86,3 | | 135 | 123 | 104 | 99 | 95 | 90 | 82 | 73 | 60 |
| **8LM 130/06** | 75 | 55 | 106,2 | | 162 | 147 | 124 | 119 | 114 | 108 | 98 | 87 | 72 |
| **8LM 130/07** | 90 | 66 | 126,0 | | 189 | 172 | 145 | 139 | 133 | 126 | 115 | 102 | 84 |
| **8LM 130/08** | 100 | 75 | 143,2 | | 216 | 196 | 166 | 158 | 152 | 144 | 131 | 116 | 96 |

| | |
|---|---|
| **Max Eff. %** | 78 |
| **Max kW / St.** | 8,4 |

| **NPSH (m)** | Q=25% | Q=50% | Q=75% | Q=100% |
|---|---|---|---|---|
| | 2,5 | 3 | 3,5 | 8,7 |

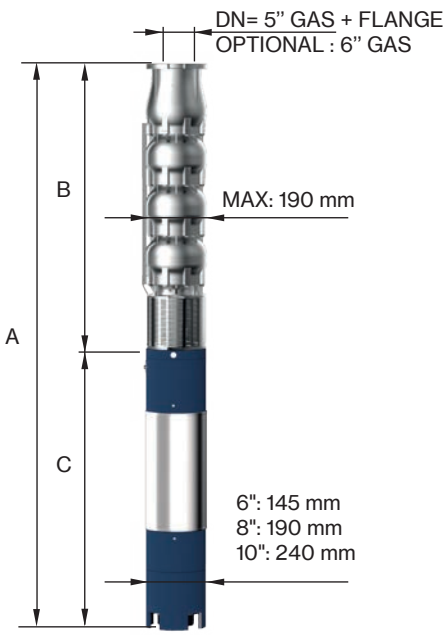


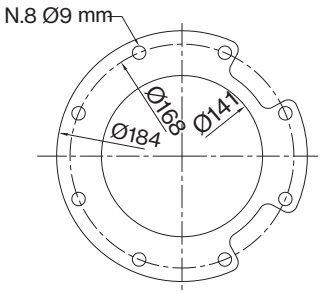


FOR COMMERCIAL TUBE
EXTERNAL DIAMETER: 139,7 mm

| TYPE 3~ | MOTOR BRACKET | DIMENSIONS (mm) | | | WEIGHT (kg) | |
|---|---|---|---|---|---|---|
| | | A | B | C | MOTOR | PUMP |
| **8LM 130/01-6** | 6" NEMA | 1214 | 463 | 751 | 60 | 19 |
| **8LM 130/02-6** | | 1579 | 588 | 991 | 83 | 26 |
| **8LM 130/03-6** | | 1894 | 713 | 1181 | 100 | 33 |
| **8LM 130/04-6** | | 2179 | 838 | 1341 | 118 | 40 |
| **8LM 130/05** | 8" NEMA | 2148 | 1025 | 1123 | 178 | 48 |
| **8LM 130/06** | | 2383 | 1150 | 1233 | 200 | 55 |
| **8LM 130/07** | | 2577 | 1275 | 1302 | 214 | 62 |
| **8LM 130/08** | | 2783 | 1400 | 1383 | 230 | 69 |

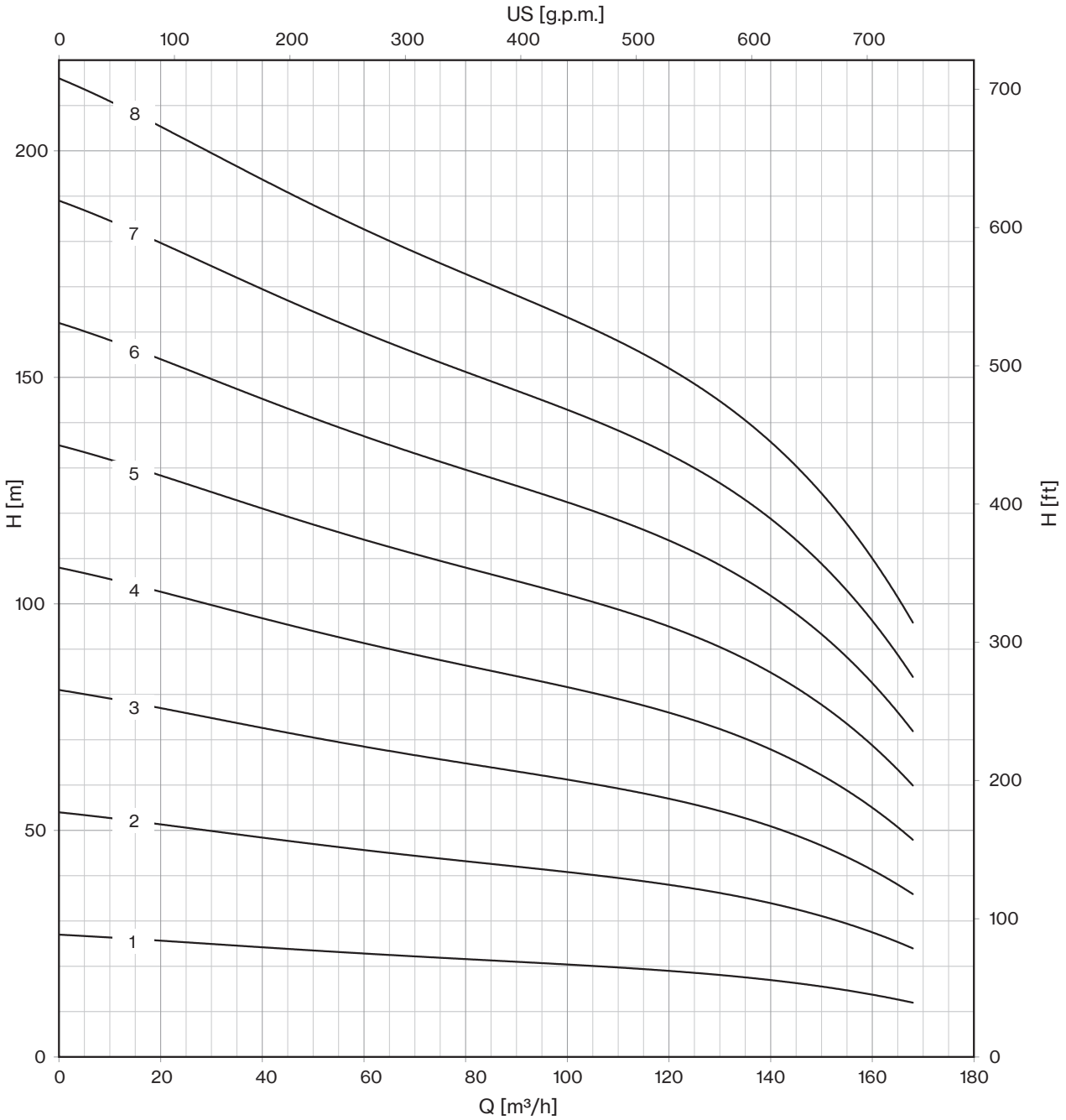
US [g.p.m.]
0
100
200
300
400
500
600
700
H [m]
H [ft]
8
7
6
5
4
3
2
1
0
50
100
150
200
0
100
200
300
400
500
600
700
0
20
40
60
80
100
120
140
160
180
Q [m³/h]

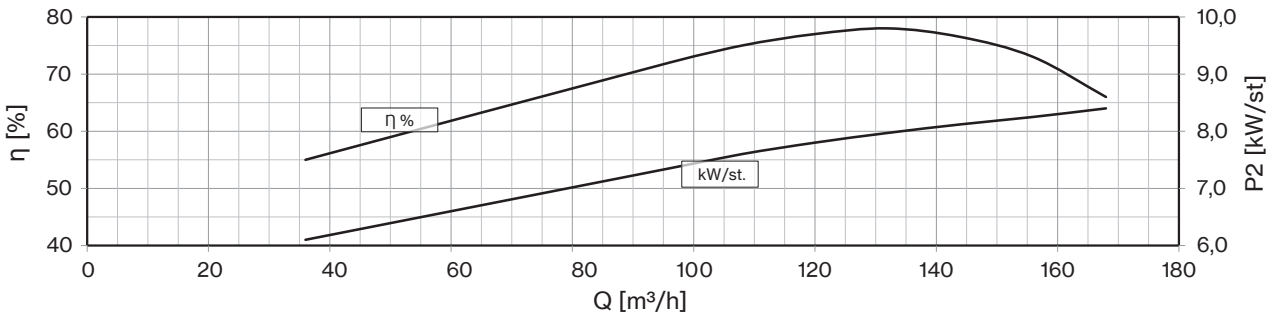
η [%]
P2 [kW/st]
η %
kW/st.
40
50
60
70
80
6,0
7,0
8,0
9,0
10,0
0
20
40
60
80
100
120
140
160
180
Q [m³/h]

# 8LM 130

| 50 Hz - 2900 rpm | | | | | Q | | | | | | | | |
|---|---|---|---|---|---|---|---|---|---|---|---|---|---|
| TYPE | SUITABLE MOTOR 3~ 400V | | | l/min | 0 | 600 | 1600 | 1800 | 2000 | 2200 | 2400 | 2600 | 2800 |
| | P2 | | CURRENT | l/sec | 0 | 10,0 | 26,7 | 30,0 | 33,3 | 36,7 | 40,0 | 43,3 | 46,7 |
| | HP | kW | A | m³/h | 0 | 36 | 96 | 108 | 120 | 132 | 144 | 156 | 168 |
| **8LM 130/09** | 125 | 92 | 175,1 | H (m) | 243 | 221 | 186 | 178 | 171 | 162 | 148 | 131 | 108 |
| **8LM 130/10** | 125 | 92 | 175,1 | | 270 | 245 | 207 | 198 | 190 | 180 | 164 | 145 | 120 |
| **8LM 130/11** | 150 | 110 | 211,0 | | 297 | 270 | 228 | 218 | 209 | 198 | 180 | 160 | 132 |
| **8LM 130/12D** | 150 | 110 | 211,0 | | 324 | 294 | 248 | 238 | 228 | 216 | 197 | 174 | 144 |
| **8LM 130/13D** | 150 | 110 | 211,0 | | 351 | 319 | 269 | 257 | 247 | 234 | 213 | 189 | 156 |
| **8LM 130/14D** | 175 | 130 | 245,3 | | 378 | 343 | 290 | 277 | 266 | 252 | 230 | 203 | 168 |
| **8LM 130/15D** | 175 | 130 | 245,3 | | 405 | 368 | 311 | 297 | 285 | 270 | 246 | 218 | 180 |
| **8LM 130/16D** | 200 | 150 | 277,2 | | 432 | 392 | 331 | 317 | 304 | 288 | 262 | 232 | 192 |
| **8LM 130/17D** | 200 | 150 | 277,2 | | 459 | 417 | 352 | 337 | 323 | 306 | 279 | 247 | 204 |
| **8LM 130/18D** | 225 | 165 | 313,3 | | 486 | 441 | 373 | 356 | 342 | 324 | 295 | 261 | 216 |

| | |
|---|---|
| **Max Eff. %** | 78 |
| **Max kW / St.** | 8,4 |

| **NPSH (m)** | Q=25% | Q=50% | Q=75% | Q=100% |
|---|---|---|---|---|
| | 2,5 | 3 | 3,5 | 8,7 |

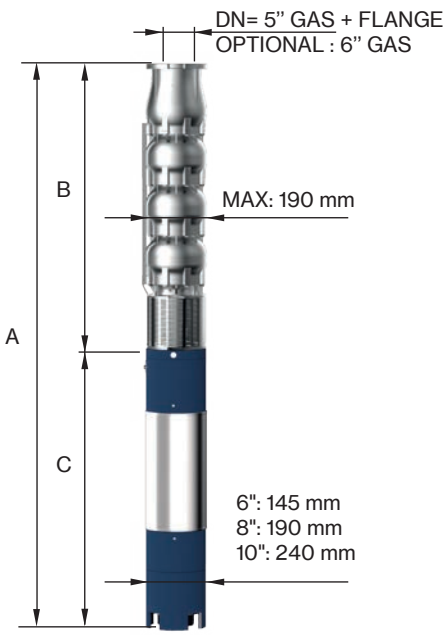


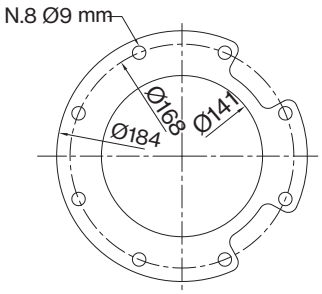


FOR COMMERCIAL TUBE
EXTERNAL DIAMETER: 139,7 mm

| TYPE 3~ | MOTOR BRACKET | DIMENSIONS (mm) | | | WEIGHT (kg) | |
|---|---|---|---|---|---|---|
| | | A | B | C | MOTOR | PUMP |
| **8LM 130/09** | 8" NEMA | 3108 | 1525 | 1583 | 270 | 76 |
| **8LM 130/10** | | 3233 | 1650 | 1583 | 270 | 83 |
| **8LM 130/11** | | 3508 | 1775 | 1733 | 300 | 90 |
| **8LM 130/12D** | | 3633 | 1900 | 1733 | 300 | 97 |
| **8LM 130/13D** | | 3758 | 2025 | 1733 | 300 | 104 |
| **8LM 130/14D-10** | 10" | 3784 | 2150 | 1634 | 385 | 114 |
| **8LM 130/15D-10** | | 3909 | 2275 | 1634 | 385 | 121 |
| **8LM 130/16D-10** | | 4134 | 2400 | 1734 | 415 | 128 |
| **8LM 130/17D-10** | | 4259 | 2525 | 1734 | 415 | 135 |
| **8LM 130/18D-10** | | 4504 | 2650 | 1854 | 444 | 142 |

*"D" Pump shaft in Duplex EN 1.4462*

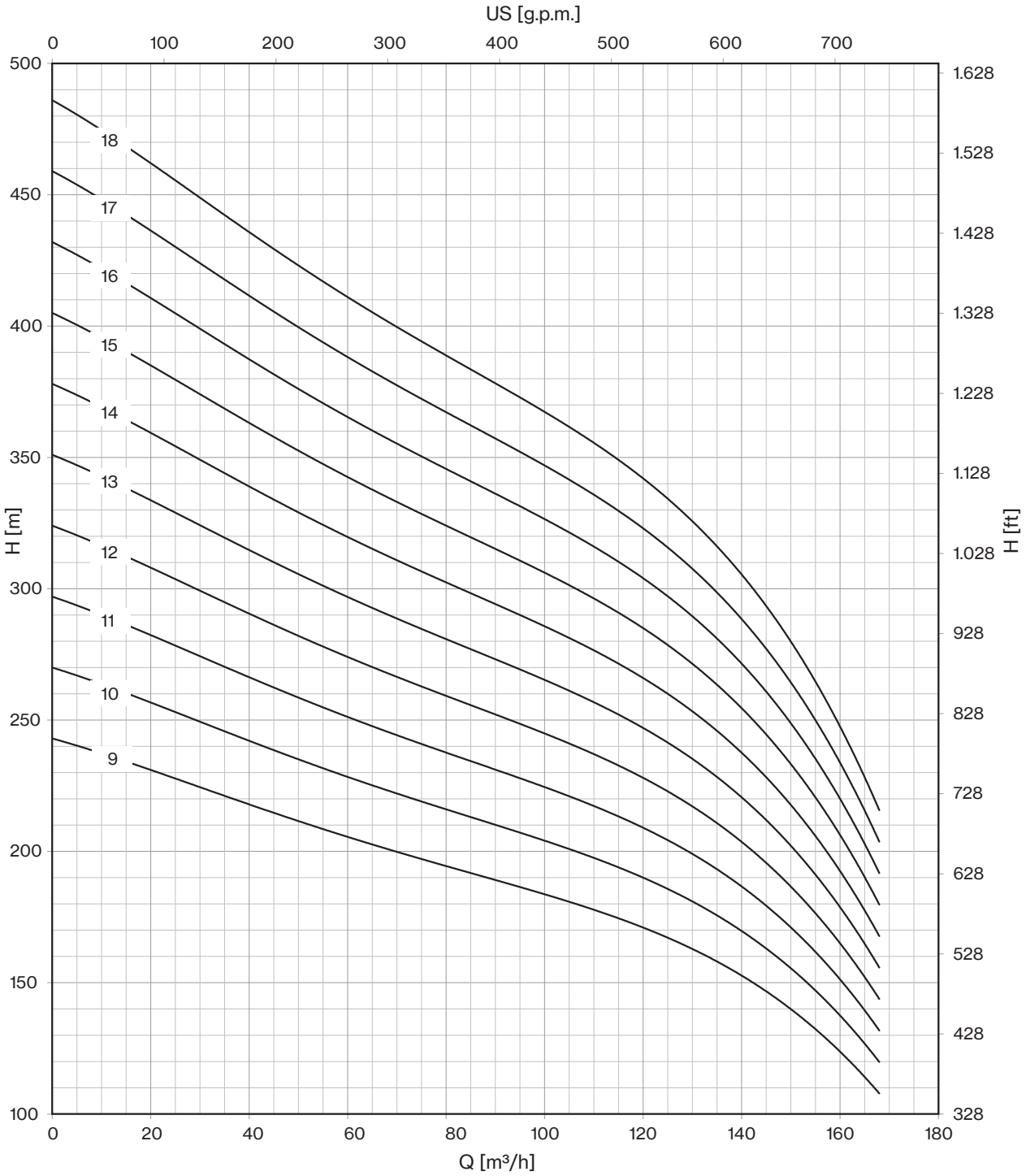
US [g.p.m.]
0
100
200
300
400
500
600
700
H [m]
500
450
400
350
300
250
200
150
100
H [ft]
1.628
1.528
1.428
1.328
1.228
1.128
1.028
928
828
728
628
528
428
328
18
17
16
15
14
13
12
11
10
9
0
20
40
60
80
100
120
140
160
180
Q [m³/h]

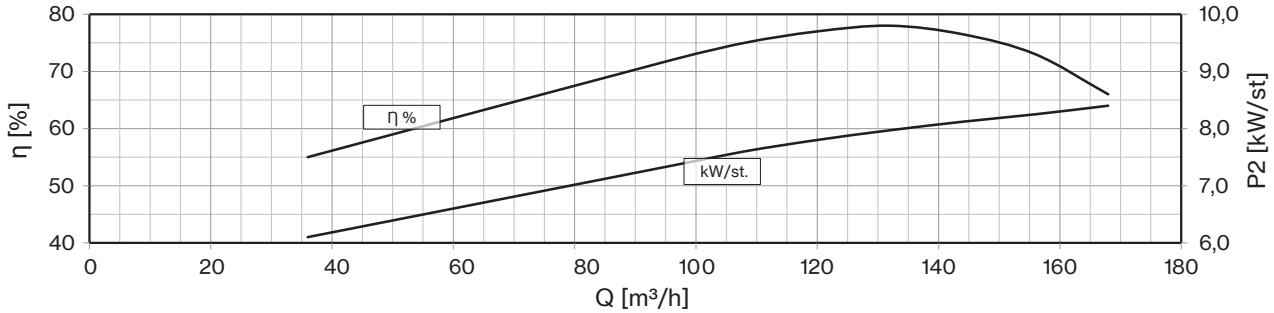
η [%]
80
70
60
50
40
P2 [kW/st]
10,0
9,0
8,0
7,0
6,0
η %
kW/st.
0
20
40
60
80
100
120
140
160
180
Q [m³/h]

# 8LM 160

| 50 Hz - 2900 rpm | | | | | Q | | | | | | | | |
|---|---|---|---|---|---|---|---|---|---|---|---|---|---|
| TYPE | SUITABLE MOTOR 3~ 400V | | | l/min | 0 | 600 | 2000 | 2200 | 2400 | 2600 | 2800 | 3000 | 3200 |
| | P2 | | CURRENT | l/sec | 0 | 10,0 | 33,3 | 36,7 | 40,0 | 43,3 | 46,7 | 50,0 | 53,3 |
| | HP | kW | A | m³/h | 0 | 36 | 120 | 132 | 144 | 156 | 168 | 180 | 192 |
| **8LM 160/01** | 15 | 11 | 23,4 | H (m) | 25 | 24 | 19 | 18 | 17 | 17 | 16 | 14 | 12 |
| **8LM 160/02** | 30 | 22 | 45,1 | | 50 | 48 | 38 | 36 | 35 | 33 | 31 | 28 | 24 |
| **8LM 160/03** | 40 | 30 | 61,1 | | 75 | 71 | 56 | 54 | 52 | 50 | 47 | 41 | 36 |
| **8LM 160/04** | 60 | 45 | 86,3 | | 100 | 95 | 75 | 72 | 70 | 66 | 62 | 55 | 48 |
| **8LM 160/05** | 75 | 55 | 106,2 | | 125 | 119 | 94 | 91 | 87 | 83 | 78 | 69 | 60 |
| **8LM 160/06** | 90 | 66 | 126,0 | | 150 | 143 | 113 | 109 | 104 | 100 | 93 | 83 | 72 |
| **8LM 160/07** | 90 | 66 | 126,0 | | 175 | 167 | 132 | 127 | 122 | 116 | 109 | 97 | 84 |
| **8LM 160/08** | 125 | 92 | 175,1 | | 200 | 190 | 150 | 145 | 139 | 133 | 124 | 110 | 96 |

| | |
|---|---|
| **Max Eff. %** | 78,5 |
| **Max kW / St.** | 9,4 |

| **NPSH (m)** | Q=25% | Q=50% | Q=75% | Q=100% |
|---|---|---|---|---|
| | 4 | 4,5 | 7 | 13 |

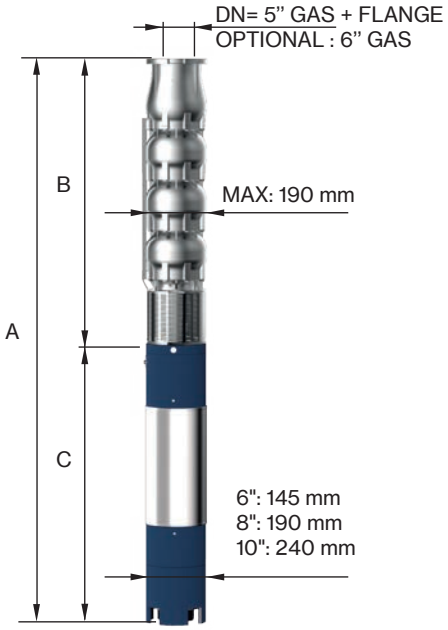


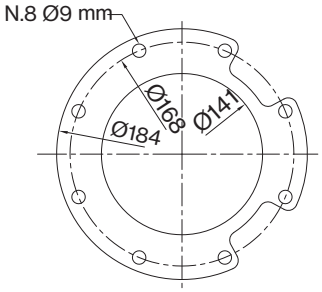


FOR COMMERCIAL TUBE
EXTERNAL DIAMETER: 139,7 mm

| TYPE 3~ | MOTOR BRACKET | DIMENSIONS (mm) | | | WEIGHT (kg) | |
|---|---|---|---|---|---|---|
| | | A | B | C | MOTOR | PUMP |
| **8LM 160/01-6** | 6" NEMA | 1299 | 488 | 811 | 65 | 20 |
| **8LM 160/02-6** | | 1709 | 638 | 1071 | 92 | 27 |
| **8LM 160/03-6** | | 2039 | 788 | 1251 | 108 | 35 |
| **8LM 160/04** | 8" NEMA | 2061 | 938 | 1123 | 178 | 42 |
| **8LM 160/05** | | 2383 | 1150 | 1233 | 200 | 50 |
| **8LM 160/06** | | 2602 | 1300 | 1302 | 214 | 58 |
| **8LM 160/07** | | 2752 | 1450 | 1302 | 214 | 65 |
| **8LM 160/08** | | 3183 | 1600 | 1583 | 270 | 73 |

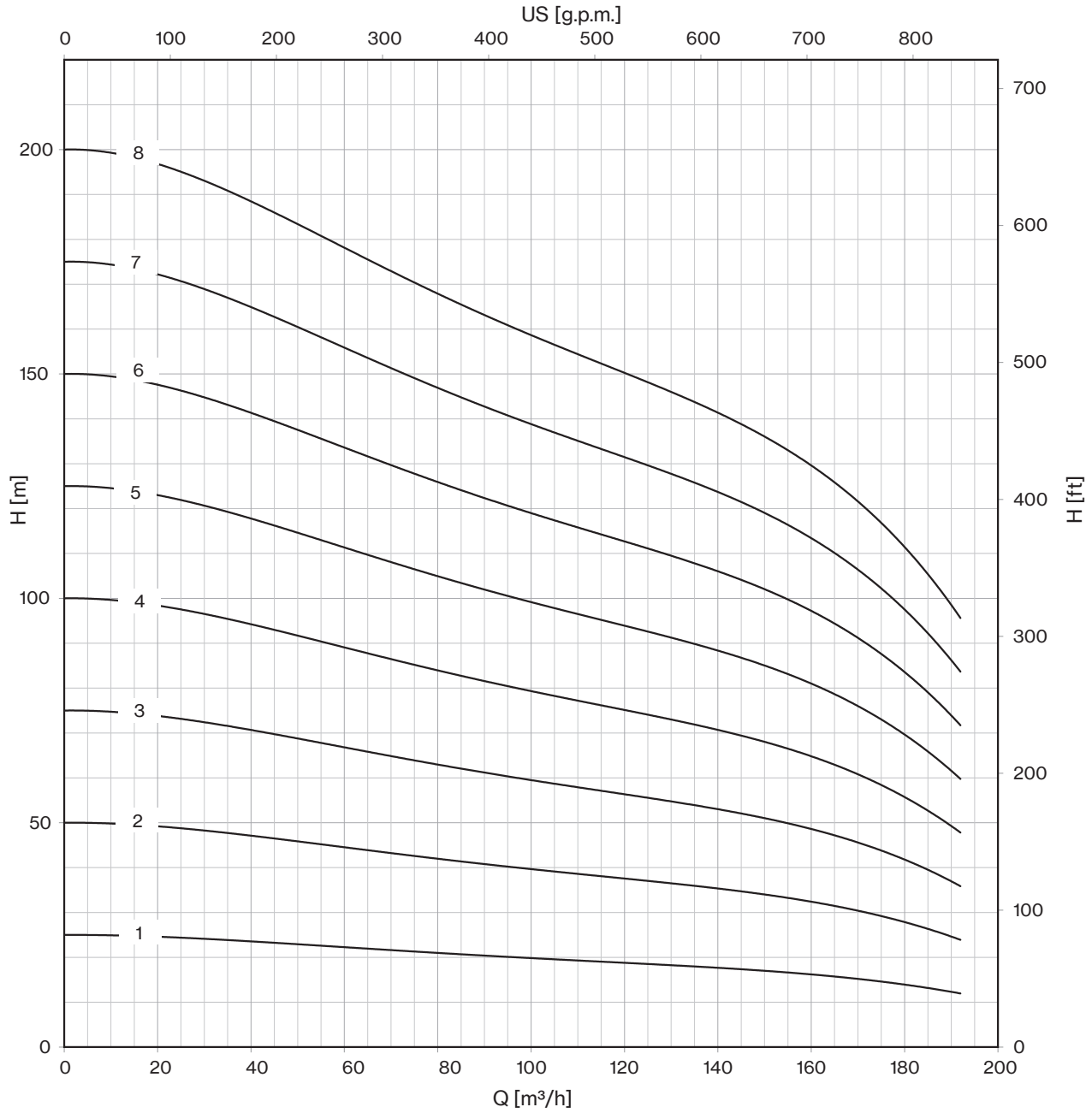
US [g.p.m.]
0
100
200
300
400
500
600
700
800
H [m]
200
150
100
50
0
H [ft]
700
600
500
400
300
200
100
0
8
7
6
5
4
3
2
1
0
20
40
60
80
100
120
140
160
180
200
Q [m³/h]

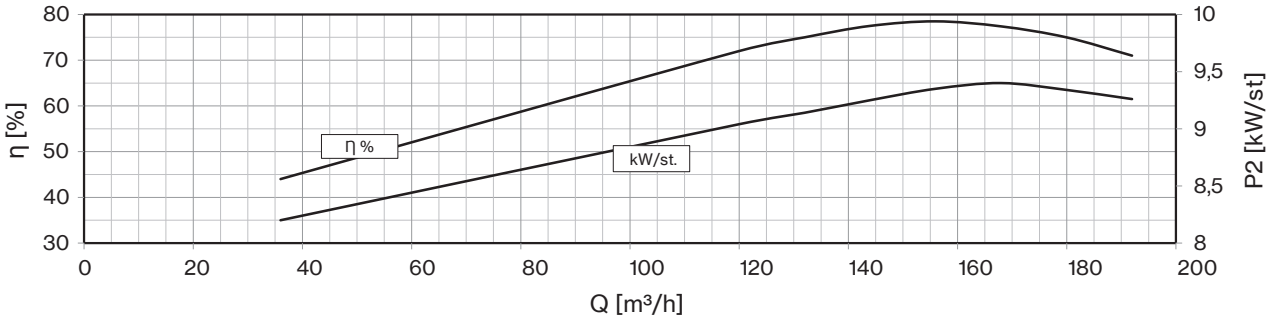
η [%]
80
70
60
50
40
30
P2 [kW/st]
10
9,5
9
8,5
8
η %
kW/st.
0
20
40
60
80
100
120
140
160
180
200
Q [m³/h]

# 8LM 160

| 50 Hz - 2900 rpm | | | | | Q | | | | | | | | |
|---|---|---|---|---|---|---|---|---|---|---|---|---|---|
| TYPE | SUITABLE MOTOR 3~ 400V | | | l/min | 0 | 600 | 2000 | 2200 | 2400 | 2600 | 2800 | 3000 | 3200 |
| | P2 | | CURRENT | l/sec | 0 | 10,0 | 33,3 | 36,7 | 40,0 | 43,3 | 46,7 | 50,0 | 53,3 |
| | HP | kW | A | m³/h | 0 | 36 | 120 | 132 | 144 | 156 | 168 | 180 | 192 |
| **8LM 160/09** | 125 | 92 | 175,1 | H (m) | 225 | 214 | 169 | 163 | 157 | 149 | 140 | 124 | 108 |
| **8LM 160/10D** | 150 | 110 | 211,0 | | 250 | 238 | 188 | 181 | 174 | 166 | 155 | 138 | 120 |
| **8LM 160/11D** | 150 | 110 | 211,0 | | 275 | 262 | 207 | 199 | 191 | 183 | 171 | 152 | 132 |
| **8LM 160/12D** | 175 | 130 | 245,3 | | 300 | 286 | 226 | 217 | 209 | 199 | 186 | 166 | 144 |
| **8LM 160/13D** | 175 | 130 | 245,3 | | 325 | 309 | 244 | 235 | 226 | 216 | 202 | 179 | 156 |
| **8LM 160/14D** | 200 | 150 | 277,2 | | 350 | 333 | 263 | 253 | 244 | 232 | 217 | 193 | 168 |
| **8LM 160/15D** | 200 | 150 | 277,2 | | 375 | 357 | 282 | 272 | 261 | 249 | 233 | 207 | 180 |
| **8LM 160/16D** | 225 | 165 | 313,3 | | 400 | 381 | 301 | 290 | 278 | 266 | 248 | 221 | 192 |
| **8LM 160/17D** | 225 | 165 | 313,3 | | 425 | 405 | 320 | 308 | 296 | 282 | 264 | 235 | 204 |
| **8LM 160/18D** | 250 | 185 | 342,2 | | 450 | 428 | 338 | 326 | 313 | 299 | 279 | 248 | 216 |

| | |
|---|---|
| **Max Eff. %** | 78,5 |
| **Max kW / St.** | 9,4 |

| **NPSH (m)** | Q=25% | Q=50% | Q=75% | Q=100% |
|---|---|---|---|---|
| | 4 | 4,5 | 7 | 13 |

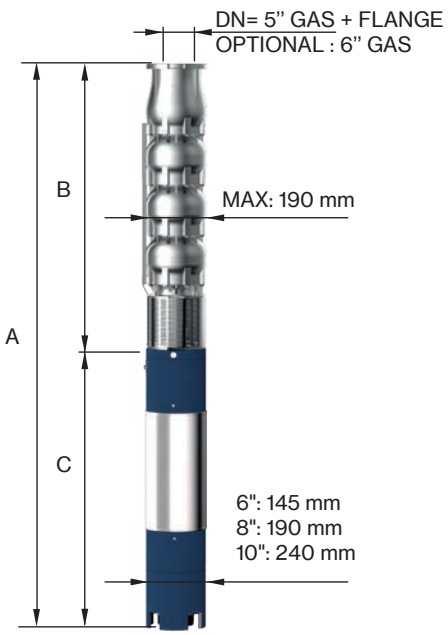


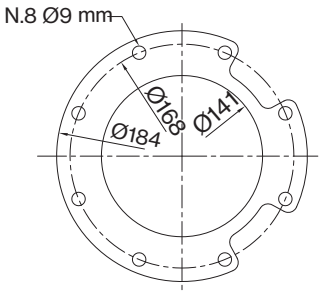


FOR COMMERCIAL TUBE
EXTERNAL DIAMETER: 139,7 mm

| TYPE 3~ | MOTOR BRACKET | DIMENSIONS (mm) | | | WEIGHT (kg) | |
|---|---|---|---|---|---|---|
| | | A | B | C | MOTOR | PUMP |
| **8LM 160/09** | 8" NEMA | 3333 | 1750 | 1583 | 270 | 80 |
| **8LM 160/10D** | | 3633 | 1900 | 1733 | 300 | 88 |
| **8LM 160/11D** | | 3783 | 2050 | 1733 | 300 | 95 |
| **8LM 160/12D-10** | 10" | 3834 | 2200 | 1634 | 385 | 103 |
| **8LM 160/13D-10** | | 3984 | 2350 | 1634 | 385 | 114 |
| **8LM 160/14D-10** | | 4234 | 2500 | 1734 | 415 | 121 |
| **8LM 160/15D-10** | | 4384 | 2650 | 1734 | 415 | 129 |
| **8LM 160/16D-10** | | 4654 | 2800 | 1854 | 444 | 136 |
| **8LM 160/17D-10** | | 4804 | 2950 | 1854 | 444 | 144 |
| **8LM 160/18D-10** | | 5084 | 3100 | 1984 | 480 | 151 |

*"D" Pump shaft in Duplex EN 1.4462*

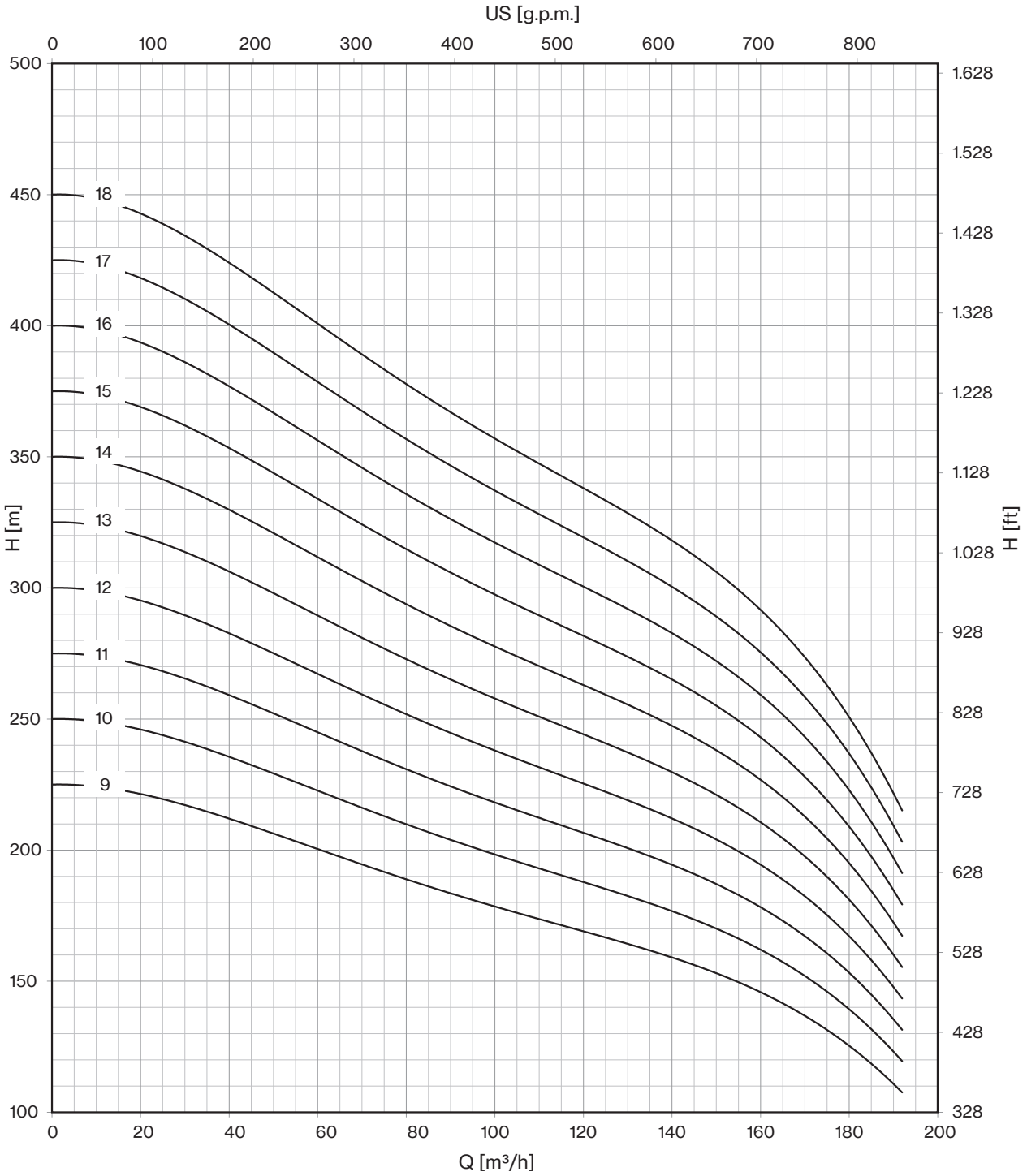
US [g.p.m.]
0
100
200
300
400
500
600
700
800
H [m]
500
450
400
350
300
250
200
150
100
H [ft]
1.628
1.528
1.428
1.328
1.228
1.128
1.028
928
828
728
628
528
428
328
18
17
16
15
14
13
12
11
10
9
0
20
40
60
80
100
120
140
160
180
200
Q [m³/h]

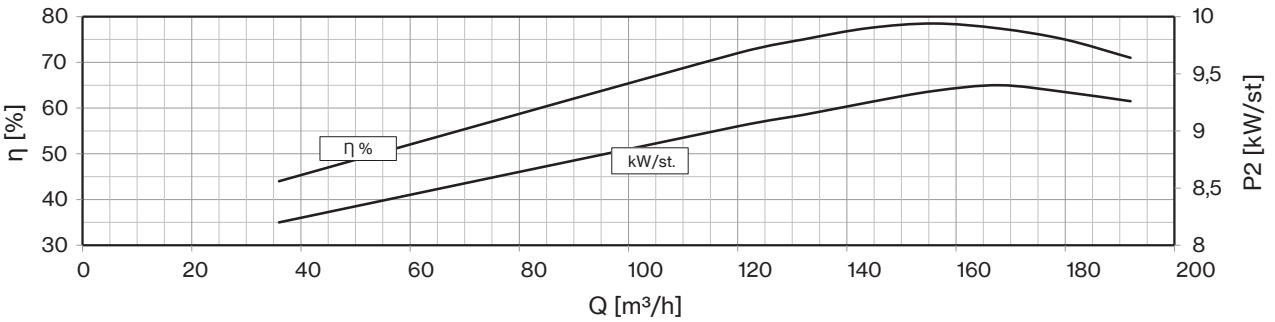
η [%]
80
70
60
50
40
30
P2 [kW/st]
10
9,5
9
8,5
8
η %
kW/st.
0
20
40
60
80
100
120
140
160
180
200
Q [m³/h]

# 6LRH-8LRH

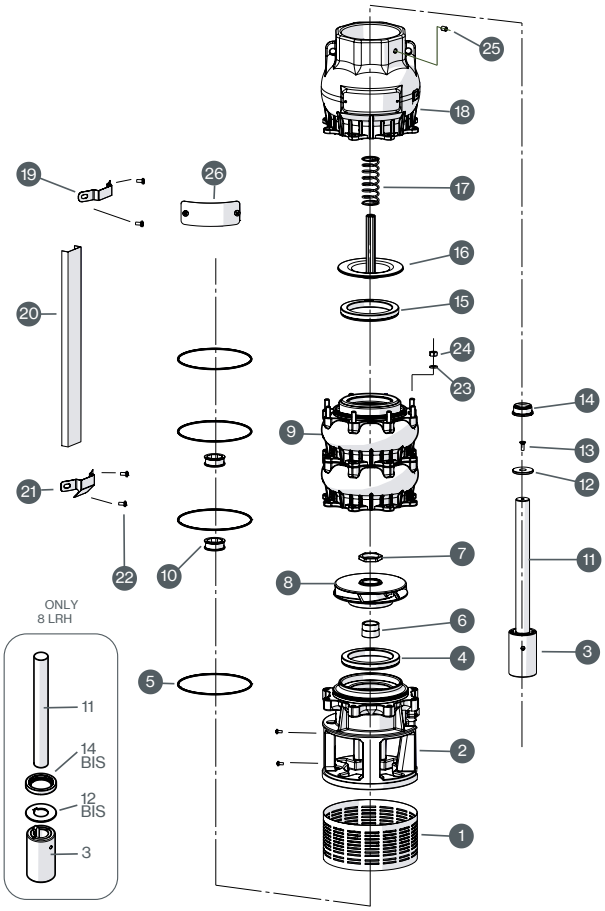


| N. CODE | DESCRIPTION | LRHS EXECUTION | LRHX EXECUTION | LRHD EXECUTION | (*) Q.TY |
|---|---|---|---|---|---|
| 1 | **SUCTION STRAINER** | AISI 304 | AISI 316 | Duplex EN 1.4462 | - |
| 2 | **MOTOR BRACKET** | AISI 304 | AISI 316 | Duplex EN 1.4462 | - |
| 3 | **COUPLING** | AISI 304 | AISI 316 | Duplex EN 1.4462 | 1 |
| 4 | **WEAR RING** | NBR | NBR | NBR | N° of Stages |
| 5 | **O-RING** | NBR | NBR | NBR | N° of Stages |
| 6 | **CONE** | AISI 304 | AISI 316 | Duplex EN 1.4462 | N° of Stages |
| 7 | **HEXAGONAL RING** | AISI 304 | AISI 316 | Duplex EN 1.4462 | N° of Stages |
| 8 | **IMPELLER** | AISI 304 | AISI 316 | Duplex EN 1.4462 | N° of Stages |
| 9 | **DIFFUSER** | AISI 304 | AISI 316 | Duplex EN 1.4462 | - |
| 10 | **BEARING BUSH** | NBR | NBR | NBR | N° of Stages |
| 11 | **SHAFT** | AISI 304 | AISI 316 | Duplex EN 1.4462 | 1 |
| 12 | **DISK** | AISI 304 | AISI 316 | Duplex EN 1.4462 | - |
| 13 | **SCREW** | AISI 304 | AISI 316 | Duplex EN 1.4462 | - |
| 14 | **COUNTERTHRUST** | PTFE+25% CARBON | PTFE+25% CARBON | PTFE+25% CARBON | 1 |
| 15 | **GASKET VALVE** | NBR | NBR | NBR | 1 |
| 16 | **VALVE** | AISI 304 | AISI 316 | Duplex EN 1.4462 | - |
| 17 | **SPRING** | AISI 301 | AISI 316 | Duplex EN 1.4462 | - |
| 18 | **BODY VALVE** | AISI 304 | AISI 316 | Duplex EN 1.4462 | - |
| 19 | **UPPER FLANGE** | AISI 304 | AISI 316 | Duplex EN 1.4462 | - |
| 20 | **COVER CABLE** | AISI 304 | AISI 316 | Duplex EN 1.4462 | - |
| 21 | **LOWER FLANGE** | AISI 304 | AISI 316 | Duplex EN 1.4462 | - |
| 22 | **SCREW M4x8** | AISI 304 | AISI 316 | Duplex EN 1.4462 | - |
| 23 | **WASHER** | AISI 304 | AISI 316 | Duplex EN 1.4462 | - |
| 24 | **NUT** | AISI 304 | AISI 316 | Duplex EN 1.4462 | - |
| 25 | **GRAIN** | AISI 304 | AISI 316 | Duplex EN 1.4462 | - |
| 26 | **METALLIC LABEL** | AISI 304 | AISI 316 | Duplex EN 1.4462 | - |

** Reccomended spare parts quantity*

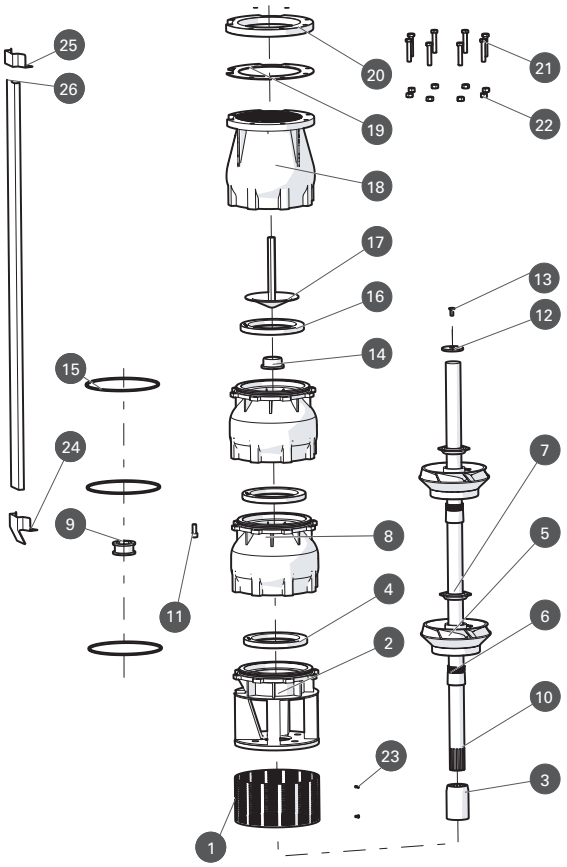


| N. CODE | DESCRIPTION | LMS EXECUTION | LMX EXECUTION | LMD EXECUTION | (*) Q.TY |
|---|---|---|---|---|---|
| 1 | **SUCTION STRAINER** | AISI 304 | AISI 316 | Duplex EN 1.4462 | - |
| 2 | **MOTOR BRACKET** | AISI 304 | AISI 316 | Duplex EN 1.4462 | - |
| 3 | **COUPLING** | AISI 304 | AISI 316 | Duplex EN 1.4462 | 1 |
| 4 | **WEAR RING** | NBR | NBR | NBR | N° of Stages |
| 5 | **IMPELLER** | AISI 304 | AISI 316 | Duplex EN 1.4462 | - |
| 6 | **CONE** | AISI 304 | AISI 316 | Duplex EN 1.4462 | N° of Stages |
| 7 | **HEXAGONAL RING** | AISI 304 | AISI 316 | Duplex EN 1.4462 | N° of Stages |
| 8 | **DIFFUSEUR** | AISI 304 | AISI 316 | Duplex EN 1.4462 | - |
| 9 | **BEARING BUSH** | NBR | NBR | NBR | N° of Stages |
| 10 | **PUMP SHAFT** | AISI 304 | AISI 316 | Duplex EN 1.4462 | 1 |
| 11 | **N.8 SCREW FOR DIFFUSEUR** | AISI 304 | AISI 316 | Duplex EN 1.4462 | - |
| 12 | **RING** | AISI 304 | AISI 316 | Duplex EN 1.4462 | 1 |
| 13 | **SCREW FOR DISK** | AISI 304 | AISI 316 | Duplex EN 1.4462 | 1 |
| 14 | **COUNTERTHRUST** | PTFE+25% CARBON | PTFE+25% CARBON | PTFE+25% CARBON | 1 |
| 15 | **O-RING** | NBR | NBR | NBR | N° of Stages |
| 16 | **GASKET VALVE** | NBR | NBR | NBR | 1 |
| 17 | **CAP VALVE** | AISI 304 | AISI 316 | Duplex EN 1.4462 | - |
| 18 | **BODY VALVE** | AISI 304 | AISI 316 | Duplex EN 1.4462 | - |
| 19 | **SEAL COUNTERFLANGE** | NBR | NBR | NBR | 1 |
| 20 | **COUNTERFLANGE** | AISI 304 | AISI 316 | Duplex EN 1.4462 | - |
| 21 | **N.8 SCREW FOR COUNTERFLANGE** | AISI 304 | AISI 316 | Duplex EN 1.4462 | - |
| 22 | **N.8 NUT FOR COUNTERFLANGE** | AISI 304 | AISI 316 | Duplex EN 1.4462 | - |
| 23 | **N.2 SCREW FOR SUCTION STRAINER** | AISI 304 | AISI 316 | Duplex EN 1.4462 | - |
| 24 | **LOWER CLAMP** | AISI 304 | AISI 316 | Duplex EN 1.4462 | - |
| 25 | **UPPER CLAMP** | AISI 304 | AISI 316 | Duplex EN 1.4462 | - |
| 26 | **COVER CABLE** | AISI 304 | AISI 316 | Duplex EN 1.4462 | - |

** Reccomended spare parts quantity*

# 10-12LM & E14 line

## Submersible Well Pumps

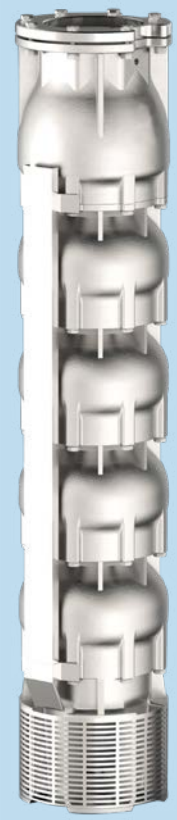

10LM line

12LM line

E14

Submersible Multistage Centrifugal Pumps for 10”, 12”, and 14” Wells. These pumps are equipped with a check valve integrated into the delivery outlet. The pump motor bracket and coupling are designed in accordance with NEMA standards, ensuring reliability and compatibility. Common applications include civil and agricultural uses. All components are manufactured from stainless steel using lost wax microfusion technology. The standard material is AISI 304 stainless steel, with the following materials available upon request: AISI 316 stainless steel, Duplex steel (EN 1.4462), and AISI 904L stainless steel. The bushing bearings and wear rings are made from sand abrasion-resistant rubber, while the reverse-thrust ring is constructed from PTFE/Graphite for enhanced durability and performance.

**General operating data:**

- Capacity up to 860 m³/h
- Pressure up to 540 m
- Hydraulic efficiency 10”, up to 79,3%
- Hydraulic efficiency 12”, up to 82,5%
- Hydraulic efficiency 14”, up to 85,7%
- Powers up to 400 kW
- Rotation speed 2.900 rpm
- Maximum depth: 350 m
- Maximum quantity of sand: 100 gr/m³
- Drinking water compatibility according to DM174 MEI ≥ 0,4 (EU directive No.547/2012)
- Performance tolerance: ISO9906-3B

| Construction features | |
|---|---|
| **Suction and delivery outlet and NRV valve** | stainless steel AISI 304 (LMS)<br>stainless steel AISI 316 (LMX - EX)<br>Duplex EN 1.4462 (LMD - ED)<br>Cast iron (E) |
| **Impellers and diffusers** | stainless steel AISI 304 (LMS)<br>stainless steel AISI 316 (LMX - EX)<br>Duplex EN 1.4462 (LMD - ED)<br>Cast iron (E) |
| **Upper bushings** | NBR rubber |
| **Shaft pump side** | stainless steel AISI 304 (LMS)<br>stainless steel AISI 316 (LMX)<br>Duplex EN 1.4462 (LMD)<br>stainless steel AISI 431 (E - EX - ED) |
| **Quantity of sand in the water** | max 100 g/m³ |

| Motor | |
|---|---|
| **Asynchronous 2 pole** | rewindable water cooled |
| **Insulation class** | Y (max 30 °C) - PPC winding type<br>F (max 50 °C) - PE2+PA or LPE winding type |
| **Protection degree** | IP68 |
| **Liquid temperature** | max 30 °C (max 50 °C on request) |
| **Depth of immersion** | max 350 m |

| 50 Hz - 2900 rpm | | | | | Q | | | | | | | | |
|---|---|---|---|---|---|---|---|---|---|---|---|---|---|
| TYPE | SUITABLE MOTOR 3~ 400V | | | l/min | 0 | 700 | 1800 | 2200 | 2600 | 3000 | 3400 | 3800 | 4000 |
| | P2 | | CURRENT | l/sec | 0 | 11,7 | 30,0 | 36,7 | 43,3 | 50,0 | 56,7 | 63,3 | 66,7 |
| | HP | kW | A | m³/h | 0 | 42 | 108 | 132 | 156 | 180 | 204 | 228 | 240 |
| **10LM 190/01DR20** | 25 | 18,5 | 38,3 | H (m) | 35 | 34 | 32 | 30 | 27 | 24 | 21 | 16 | 14 |
| **10LM 190/01** | 30 | 22 | 45,1 | | 42 | 41 | 38 | 36 | 34 | 31 | 28 | 23 | 21 |
| **10LM 190/02DR10** | 50 | 37 | 75,8 | | 76 | 75 | 70 | 66 | 61 | 55 | 48 | 40 | 35 |
| **10LM 190/02** | 60 | 45 | 86,3 | | 83 | 82 | 77 | 73 | 68 | 62 | 55 | 47 | 41 |
| **10LM 190/03DR20** | 75 | 55 | 106,2 | | 104 | 102 | 95 | 89 | 82 | 73 | 62 | 49 | 42 |
| **10LM 190/03** | 90 | 66 | 126,0 | | 125 | 124 | 115 | 109 | 102 | 93 | 83 | 70 | 62 |
| **10LM 190/04DR10** | 100 | 75 | 143,2 | | 152 | 150 | 140 | 132 | 122 | 110 | 96 | 79 | 70 |
| **10LM 190/04** | 125 | 92 | 175,1 | | 166 | 165 | 154 | 146 | 136 | 124 | 110 | 94 | 82 |
| **10LM 190/05DR10** | 150 | 110 | 211,0 | | 190 | 188 | 175 | 165 | 153 | 138 | 120 | 99 | 87 |
| **10LM 190/05D** | 150 | 110 | 211,0 | | 208 | 206 | 192 | 182 | 170 | 155 | 138 | 117 | 103 |
| **10LM 190/06DR10D** | 175 | 130 | 245,3 | | 228 | 225 | 210 | 198 | 184 | 166 | 144 | 119 | 104 |
| **10LM 190/06D** | 175 | 130 | 245,3 | | 250 | 247 | 230 | 218 | 204 | 186 | 166 | 140 | 124 |

| | |
|---|---|
| **Max Eff. % DR20 =** | 76,5 |
| **Max Eff. % DR10 =** | 77,5 |
| **Max Eff. %** | 77 |
| **Max kW / St. DR20 =** | 16 |
| **Max kW / St. DR10 =** | 18,5 |
| **Max kW / St.** | 20,8 |

| **NPSH (m)** | Q=25% | Q=50% | Q=75% | Q=100% |
|---|---|---|---|---|
| | 3,4 | 5 | 7,8 | 11,8 |

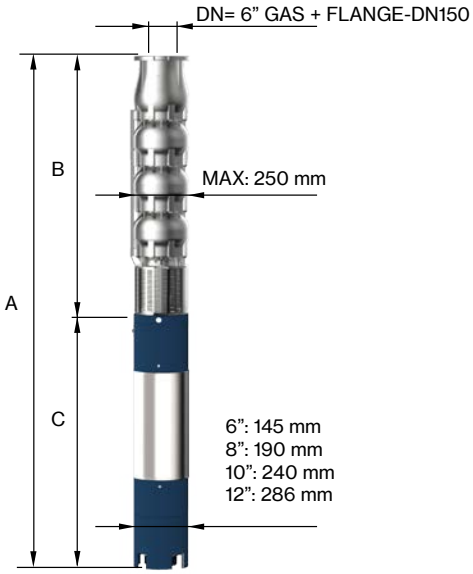


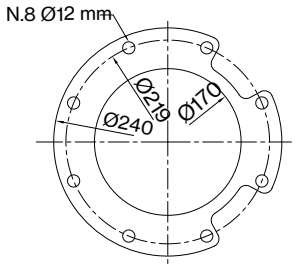


FOR COMMERCIAL TUBE
EXTERNAL DIAMETER: 168,3 mm

| TYPE 3~ | MOTOR BRACKET | DIMENSIONS (mm) | | | WEIGHT (kg) | |
|---|---|---|---|---|---|---|
| | | A | B | C | MOTOR | PUMP |
| **10LM 190/01DR20-8** | 8" NEMA | 1616 | 625 | 991 | 83 | 41 |
| **10LM 190/01-8** | | 1696 | 625 | 1071 | 92 | 41 |
| **10LM 190/02DR10-8** | | 2146 | 805 | 1341 | 118 | 56 |
| **10LM 190/02-8** | | 1928 | 805 | 1123 | 178 | 56 |
| **10LM 190/03DR20-8** | | 2218 | 985 | 1233 | 200 | 72 |
| **10LM 190/03-8** | | 2287 | 985 | 1302 | 214 | 72 |
| **10LM 190/04DR10-8** | | 2548 | 1165 | 1383 | 230 | 87 |
| **10LM 190/04-8** | | 2748 | 1165 | 1583 | 270 | 87 |
| **10LM 190/05DR10-8** | | 2898 | 1165 | 1733 | 300 | 87 |
| **10LM 190/05D-8** | | 2898 | 1165 | 1733 | 300 | 87 |
| **10LM 190/06DR10D** | 10" | 2799 | 1165 | 1634 | 385 | 87 |
| **10LM 190/06D** | | 2799 | 1165 | 1634 | 385 | 87 |

*"DR" : reduced-diameter impellers*
*"D" Pump shaft in Duplex EN 1.4462*

# 10LM 190

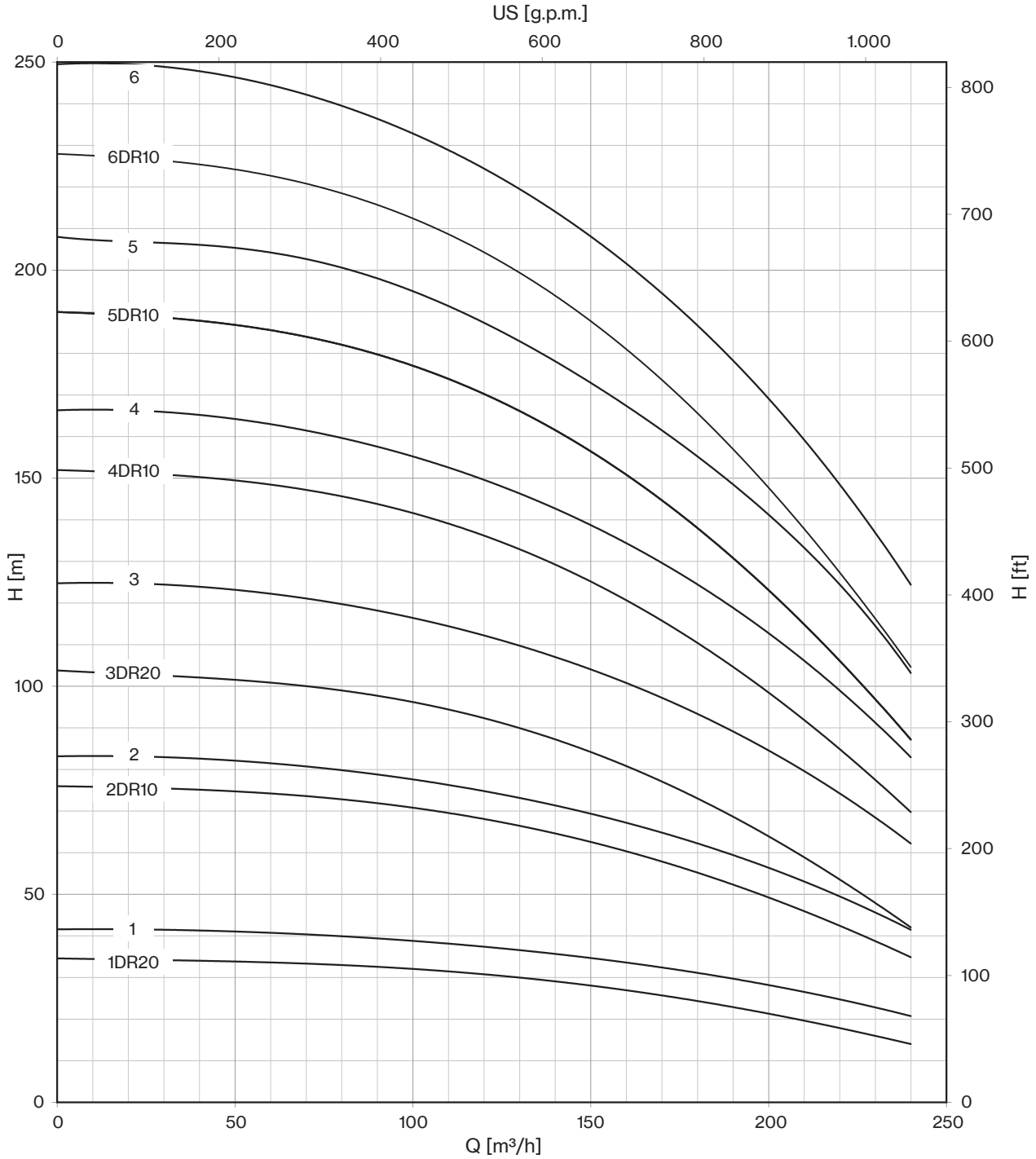


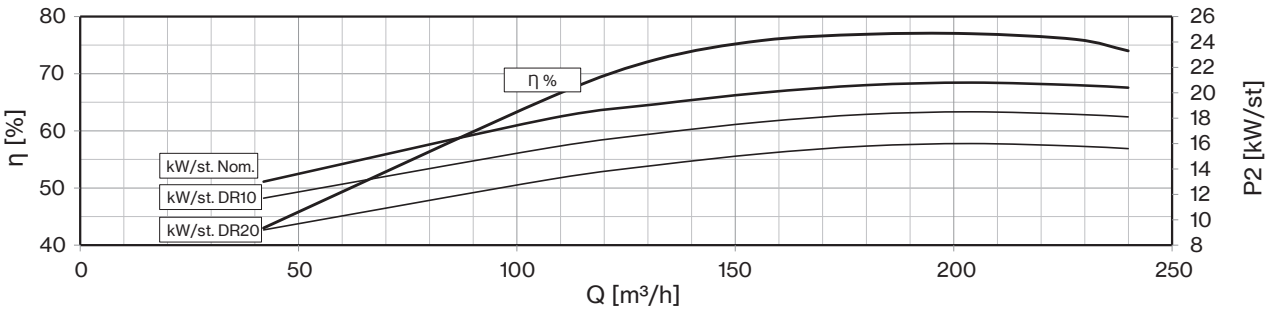




*Drinking water compatibility according DM 174*
*MEI ≥ 0,4 (regulation EU N. 547/2012)*
*Models with less than 3 stages reduce the % eff. of 5%*
*Hydraulic performance according to ISO 9906 grade 3B*

| 50 Hz - 2900 rpm | | | | | Q | | | | | | | | |
|---|---|---|---|---|---|---|---|---|---|---|---|---|---|
| TYPE | SUITABLE MOTOR 3~ 400V | | | l/min | 0 | 700 | 1800 | 2200 | 2600 | 3000 | 3400 | 3800 | 4000 |
| | P2 | | CURRENT | l/sec | 0 | 11,7 | 30,0 | 36,7 | 43,3 | 50,0 | 56,7 | 63,3 | 66,7 |
| | HP | kW | A | m³/h | 0 | 42 | 108 | 132 | 156 | 180 | 204 | 228 | 240 |
| **10LM 190/07DR10D** | 175 | 130 | 245,3 | H (m) | 266 | 263 | 245 | 231 | 214 | 193 | 168 | 139 | 122 |
| **10LM 190/07D** | 200 | 150 | 277,2 | | 291 | 288 | 269 | 255 | 238 | 217 | 193 | 164 | 144 |
| **10LM 190/08DR10D** | 200 | 150 | 277,2 | | 304 | 300 | 280 | 264 | 245 | 221 | 192 | 158 | 139 |
| **10LM 190/08D** | 250 | 185 | 342,2 | | 333 | 330 | 307 | 291 | 272 | 248 | 221 | 187 | 165 |
| **10LM 190/09D** | 300 | 220 | 430,0 | | 374 | 371 | 346 | 328 | 306 | 279 | 248 | 211 | 185 |
| **10LM 190/10D** | 300 | 220 | 430,0 | | 416 | 412 | 384 | 364 | 340 | 310 | 276 | 234 | 206 |
| **10LM 190/11D** | 340 | 250 | 481,0 | | 458 | 453 | 422 | 400 | 374 | 341 | 304 | 257 | 227 |

| | |
|---|---|
| **Max Eff. % DR20 =** | 76,5 |
| **Max Eff. % DR10 =** | 77,5 |
| **Max Eff. %** | 77 |
| **Max kW / St. DR20 =** | 16 |
| **Max kW / St. DR10 =** | 18,5 |
| **Max kW / St.** | 20,8 |

| **NPSH (m)** | Q=25% | Q=50% | Q=75% | Q=100% |
|---|---|---|---|---|
| | 3,4 | 5 | 7,8 | 11,8 |

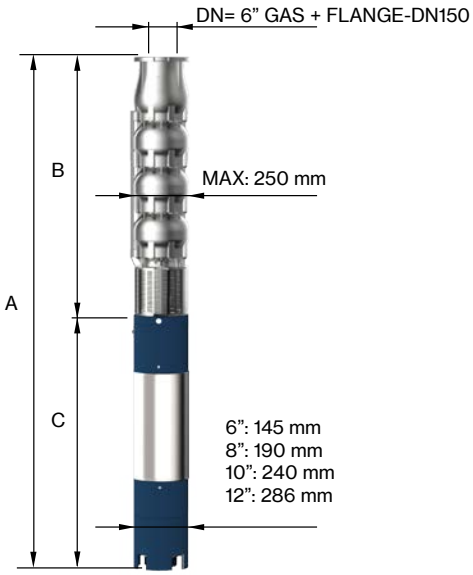


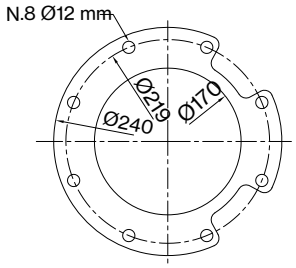


FOR COMMERCIAL TUBE
EXTERNAL DIAMETER: 168,3 mm

| TYPE 3~ | MOTOR BRACKET | DIMENSIONS (mm) | | | WEIGHT (kg) | |
|---|---|---|---|---|---|---|
| | | A | B | C | MOTOR | PUMP |
| **10LM 190/07 DR10D** | 10" | 3339 | 1705 | 1634 | 385 | 134 |
| **10LM 190/07D** | | 3439 | 1705 | 1734 | 415 | 134 |
| **10LM 190/08DR10D** | | 3619 | 1885 | 1734 | 415 | 149 |
| **10LM 190/08D** | | 3869 | 1885 | 1984 | 480 | 149 |
| **10LM 190/09D-12** | 12" | 4175 | 2065 | 2110 | 700 | 165 |
| **10LM 190/10D-12** | | 4355 | 2245 | 2110 | 700 | 180 |
| **10LM 190/11D-12** | | 4705 | 2425 | 2280 | 775 | 196 |

*"DR" : reduced-diameter impellers*
*"D" Pump shaft in Duplex EN 1.4462*

# 10LM 190

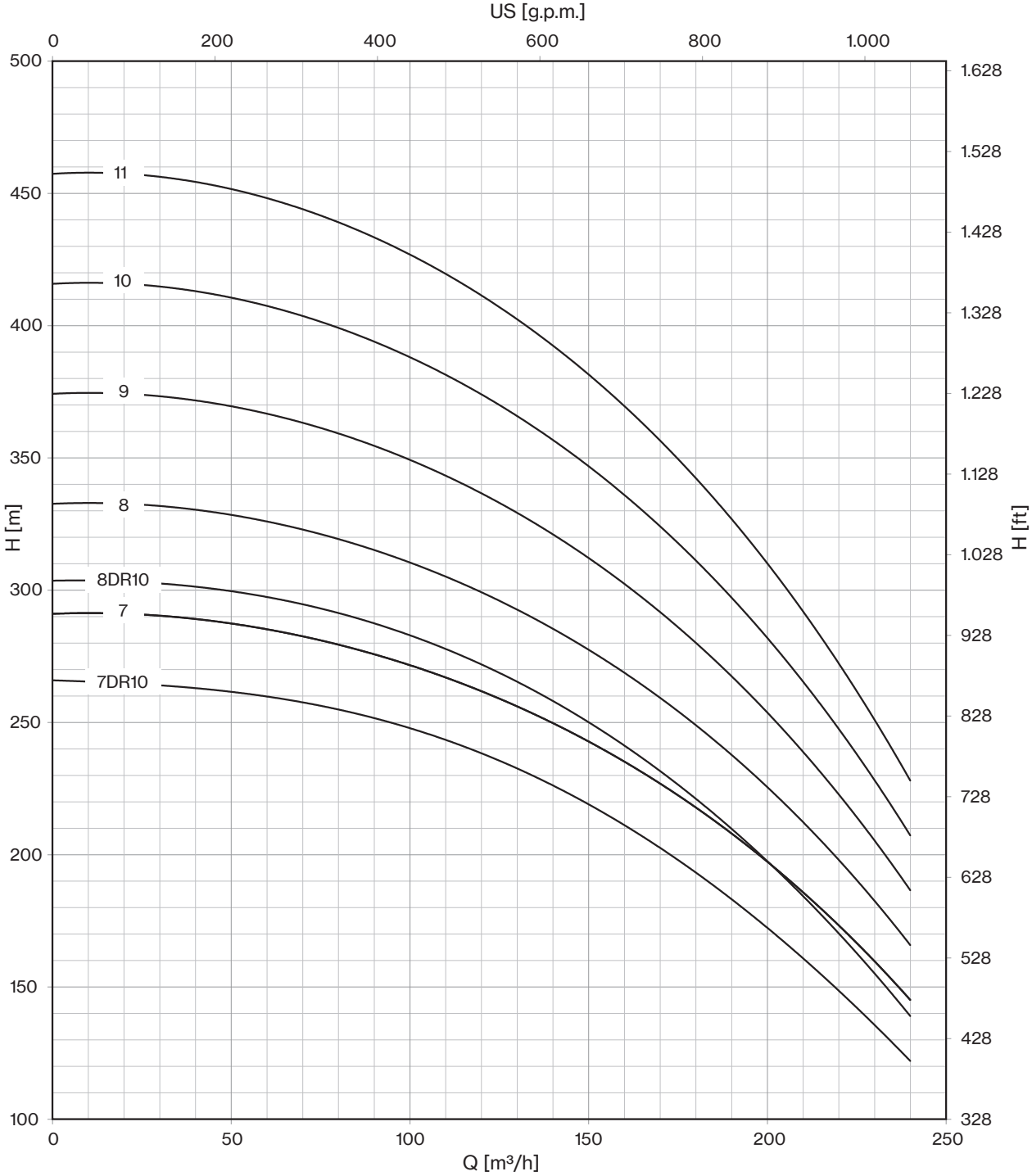


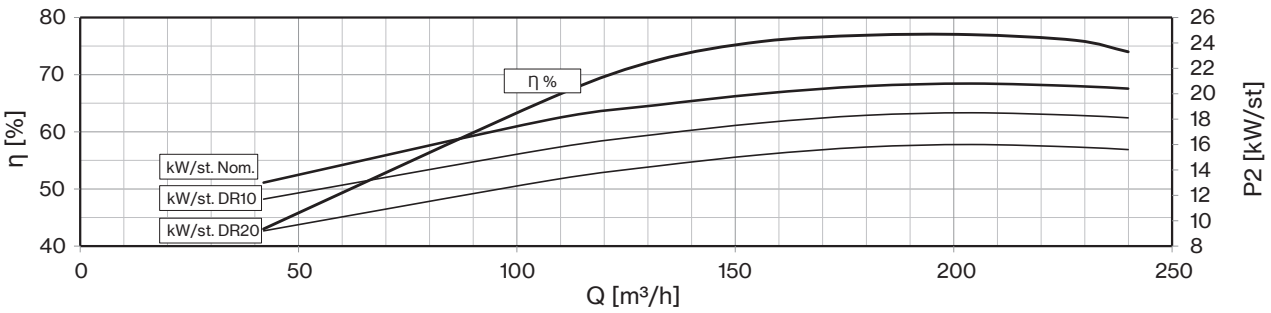




*Drinking water compatibility according DM 174*
*MEI ≥ 0,4 (regulation EU N. 547/2012)*
*Models with less than 3 stages reduce the % eff. of 5%*
*Hydraulic performance according to ISO 9906 grade 3B*

| 50 Hz - 2900 rpm | | | | | Q | | | | | | | | |
|---|---|---|---|---|---|---|---|---|---|---|---|---|---|
| TYPE | SUITABLE MOTOR 3~ 400V | | | l/min | 0 | 800 | 2200 | 2600 | 3000 | 3400 | 3800 | 4200 | 4600 |
| | P2 | | CURRENT | l/sec | 0 | 13,3 | 36,7 | 43,3 | 50,0 | 56,7 | 63,3 | 70,0 | 76,7 |
| | HP | kW | A | m³/h | 0 | 48 | 132 | 156 | 180 | 204 | 228 | 252 | 276 |
| **10LM 230/01DR20** | 25 | 18,5 | 38,3 | H (m) | 37 | 36 | 31 | 29 | 27 | 25 | 23 | 19 | 16 |
| **10LM 230/01** | 35 | 26 | 52,9 | | 44 | 43 | 38 | 36 | 34 | 32 | 30 | 26 | 23 |
| **10LM 230/02DR20** | 50 | 37 | 75,8 | | 74 | 71 | 62 | 58 | 54 | 50 | 45 | 38 | 32 |
| **10LM 230/02** | 75 | 55 | 106,2 | | 88 | 85 | 75 | 72 | 68 | 64 | 59 | 53 | 46 |
| **10LM 230/03DR20** | 75 | 55 | 106,2 | | 110 | 107 | 93 | 87 | 81 | 75 | 68 | 57 | 48 |
| **10LM 230/03DR10** | 90 | 66 | 126,0 | | 121 | 116 | 102 | 98 | 92 | 86 | 78 | 68 | 59 |
| **10LM 230/03** | 100 | 75 | 143,2 | | 131 | 128 | 113 | 108 | 102 | 96 | 89 | 79 | 69 |
| **10LM 230/04DR10** | 125 | 92 | 175,1 | | 162 | 154 | 136 | 130 | 122 | 114 | 104 | 91 | 78 |
| **10LM 230/04** | 125 | 92 | 175,1 | | 175 | 170 | 150 | 144 | 136 | 128 | 118 | 106 | 92 |
| **10LM 230/05DR10D** | 150 | 110 | 211,0 | | 202 | 193 | 170 | 163 | 153 | 143 | 130 | 114 | 98 |
| **10LM 230/05 D** | 175 | 130 | 245,3 | | 219 | 213 | 188 | 180 | 170 | 160 | 148 | 132 | 115 |
| **10LM 230/06DR10D** | 175 | 130 | 245,3 | | 242 | 231 | 204 | 195 | 183 | 171 | 156 | 137 | 117 |
| **10LM 230/06D** | 200 | 150 | 277,2 | | 263 | 255 | 225 | 216 | 204 | 192 | 178 | 159 | 138 |

| | |
|---|---|
| **Max Eff. % DR20 =** | 78,4 |
| **Max Eff. % DR10 =** | 79,5 |
| **Max Eff. %** | 79,2 |
| **Max kW / St. DR20 =** | 17,5 |
| **Max kW / St. DR10 =** | 19,5 |
| **Max kW / St.** | 22,8 |

| **NPSH (m)** | Q=25% | Q=50% | Q=75% | Q=100% |
|---|---|---|---|---|
| | 3,4 | 5 | 7,8 | 11,8 |

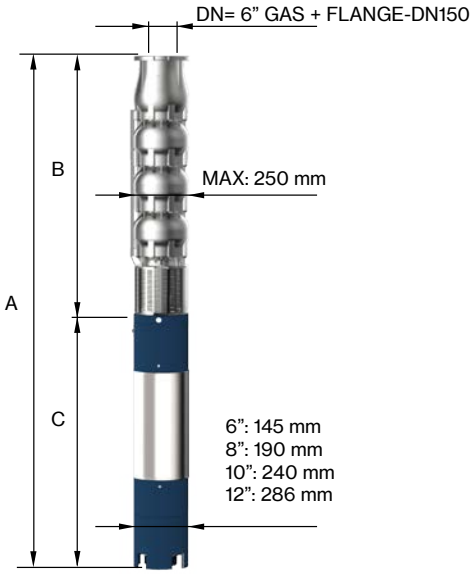


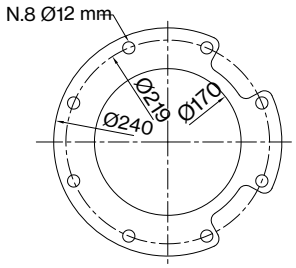


FOR COMMERCIAL TUBE
EXTERNAL DIAMETER: 168,3 mm

| TYPE 3~ | MOTOR BRACKET | DIMENSIONS (mm) | | | WEIGHT (kg) | |
|---|---|---|---|---|---|---|
| | | A | B | C | MOTOR | PUMP |
| **10LM 230/01DR20-6** | 6" NEMA | 1616 | 625 | 991 | 83 | 41 |
| **10LM 230/01-6** | | 1806 | 625 | 1181 | 100 | 41 |
| **10LM 230/02DR20-6** | | 2146 | 805 | 1341 | 118 | 56 |
| **10LM 230/02-8** | 8" NEMA | 2038 | 805 | 1233 | 200 | 56 |
| **10LM 230/03DR20-8** | | 2218 | 985 | 1233 | 200 | 72 |
| **10LM 230/03DR10-8** | | 2287 | 985 | 1302 | 214 | 72 |
| **10LM 230/03-8** | | 2368 | 985 | 1383 | 230 | 72 |
| **10LM 230/04DR10-8** | | 2748 | 1165 | 1583 | 270 | 87 |
| **10LM 230/04-8** | | 2748 | 1165 | 1583 | 270 | 87 |
| **10LM 230/05DR10D-8** | | 3078 | 1345 | 1733 | 300 | 103 |
| **10LM 230/05D** | 10" | 3078 | 1345 | 1733 | 300 | 103 |
| **10LM 230/06DR10D** | | 3159 | 1525 | 1634 | 385 | 118 |
| **10LM 230/06D** | | 3159 | 1525 | 1634 | 385 | 118 |

*"DR" : reduced-diameter impellers*
*"D" Pump shaft in Duplex EN 1.4462*

# 10LM 230

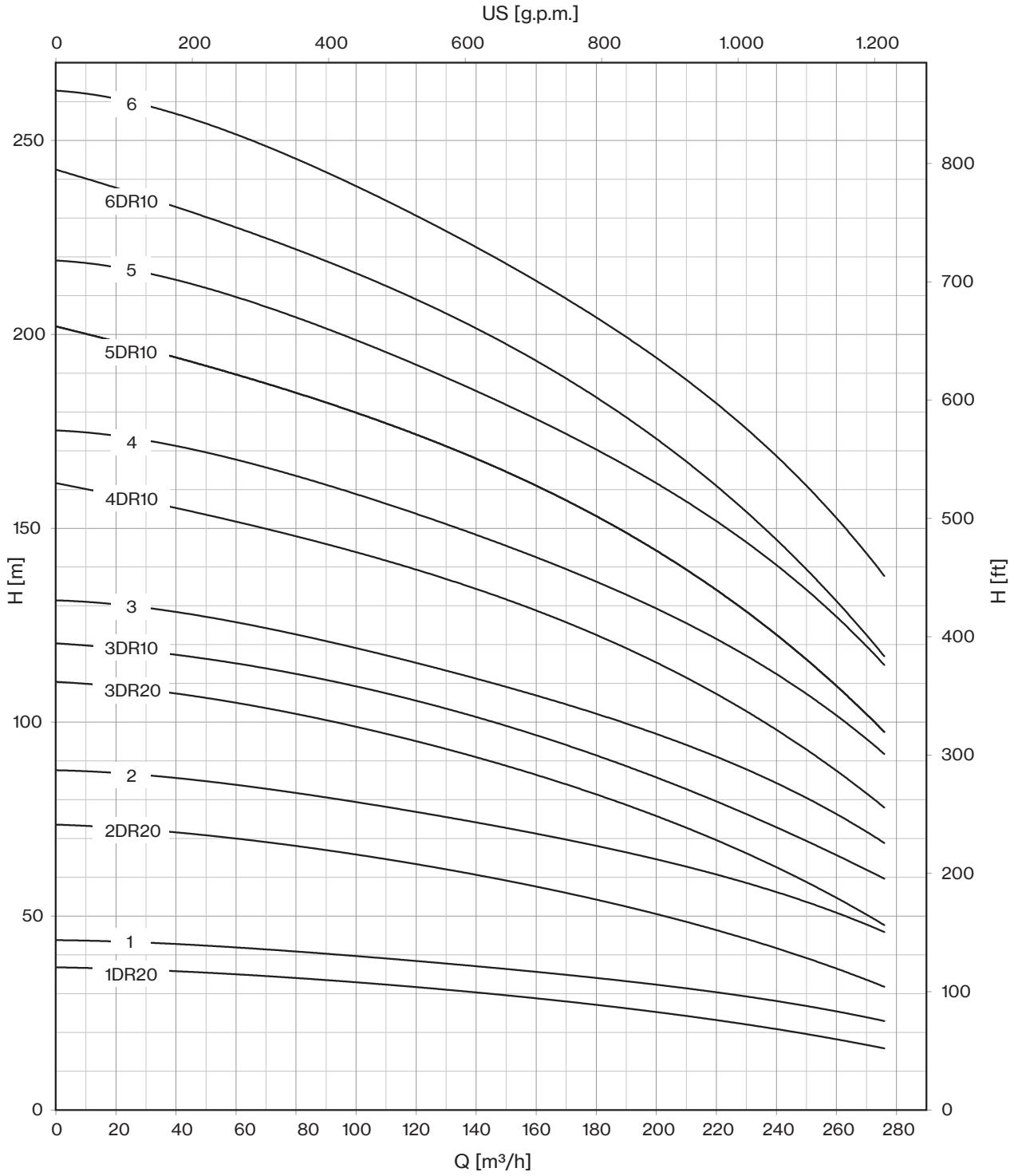


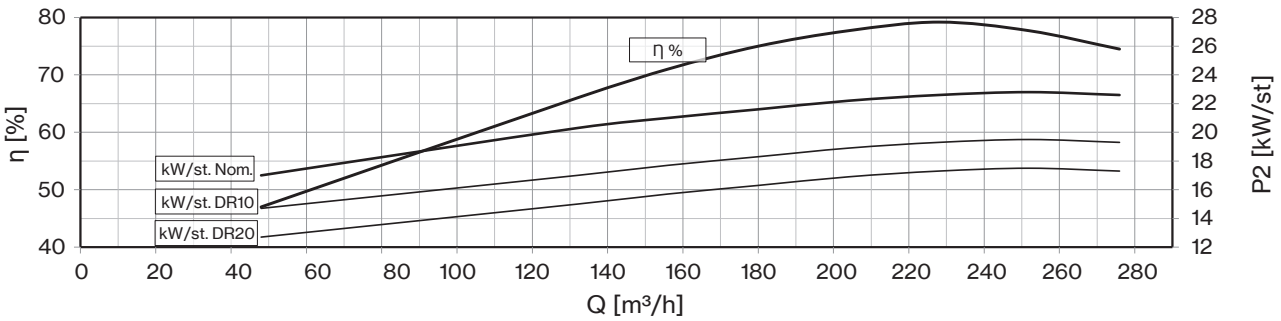




*Drinking water compatibility according DM 174*
*MEI ≥ 0,4 (regulation EU N. 547/2012)*
*Models with less than 3 stages reduce the % eff. of 5%*
*Hydraulic performance according to ISO 9906 grade 3B*

| 50 Hz - 2900 rpm | | | | | Q | | | | | | | | |
|---|---|---|---|---|---|---|---|---|---|---|---|---|---|
| TYPE | SUITABLE MOTOR 3~ 400V | | | l/min | 0 | 800 | 2200 | 2600 | 3000 | 3400 | 3800 | 4200 | 4600 |
| | P2 | | CURRENT | l/sec | 0 | 13,3 | 36,7 | 43,3 | 50,0 | 56,7 | 63,3 | 70,0 | 76,7 |
| | HP | kW | A | m³/h | 0 | 48 | 132 | 156 | 180 | 204 | 228 | 252 | 276 |
| **10LM 230/07DR10D** | 200 | 150 | 277,2 | H (m) | 283 | 270 | 238 | 228 | 214 | 200 | 182 | 160 | 137 |
| **10LM 230/07D** | 225 | 165 | 313,3 | | 307 | 298 | 263 | 252 | 238 | 224 | 207 | 185 | 161 |
| **10LM 230/08DR10D** | 225 | 165 | 313,3 | | 323 | 308 | 272 | 261 | 245 | 229 | 208 | 182 | 157 |
| **10LM 230/08D** | 250 | 185 | 342,2 | | 350 | 340 | 301 | 288 | 272 | 256 | 237 | 211 | 184 |
| **10LM 230/09D** | 300 | 220 | 430,0 | | 394 | 383 | 338 | 324 | 306 | 288 | 266 | 238 | 207 |
| **10LM 230/10D** | 340 | 250 | 481,0 | | 438 | 425 | 376 | 360 | 340 | 320 | 296 | 264 | 230 |
| **10LM 230/11D** | 340 | 250 | 481,0 | | 482 | 468 | 413 | 396 | 374 | 352 | 326 | 291 | 253 |

| | |
|---|---|
| **Max Eff. % DR20 =** | 78,4 |
| **Max Eff. % DR10 =** | 79,5 |
| **Max Eff. %** | 79,2 |
| **Max kW / St. DR20 =** | 17,5 |
| **Max kW / St. DR10 =** | 19,5 |
| **Max kW / St.** | 22,8 |

| **NPSH (m)** | Q=25% | Q=50% | Q=75% | Q=100% |
|---|---|---|---|---|
| | 3,4 | 5 | 7,8 | 11,8 |

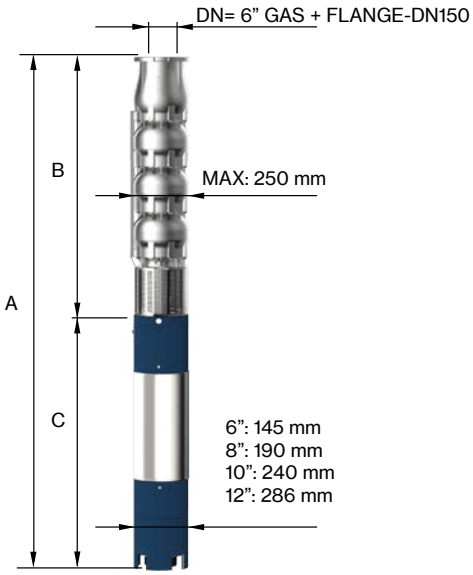


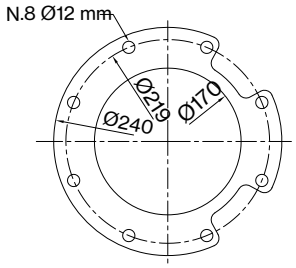


FOR COMMERCIAL TUBE
EXTERNAL DIAMETER: 168,3 mm

| TYPE 3~ | MOTOR BRACKET | DIMENSIONS (mm) | | | WEIGHT (kg) | |
|---|---|---|---|---|---|---|
| | | A | B | C | MOTOR | PUMP |
| **10LM 230/07DR10D** | 10" | 3439 | 1705 | 1734 | 415 | 134 |
| **10LM 230/07D** | | 3559 | 1705 | 1854 | 444 | 134 |
| **10LM 230/08DR10D** | | 3739 | 1885 | 1854 | 444 | 149 |
| **10LM 230/08D** | | 3869 | 1885 | 1984 | 480 | 149 |
| **10LM 230/09D-12** | 12" | 4175 | 2065 | 2110 | 700 | 165 |
| **10LM 230/10D-12** | | 4355 | 2245 | 2110 | 700 | 180 |
| **10LM 230/11D-12** | | 4705 | 2425 | 2280 | 775 | 196 |

*"DR" : reduced-diameter impellers*
*"D" Pump shaft in Duplex EN 1.4462*

# 10LM 230

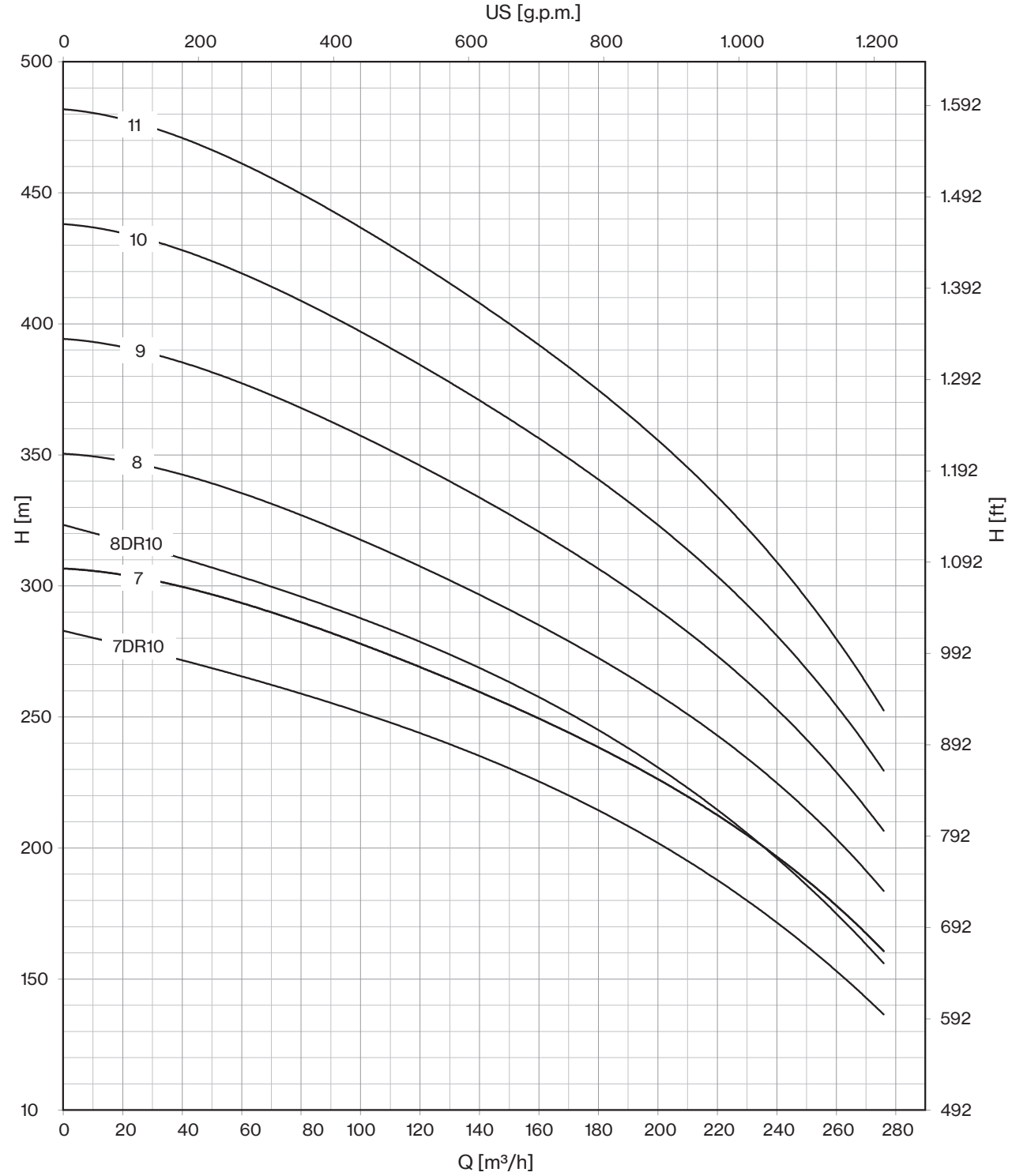


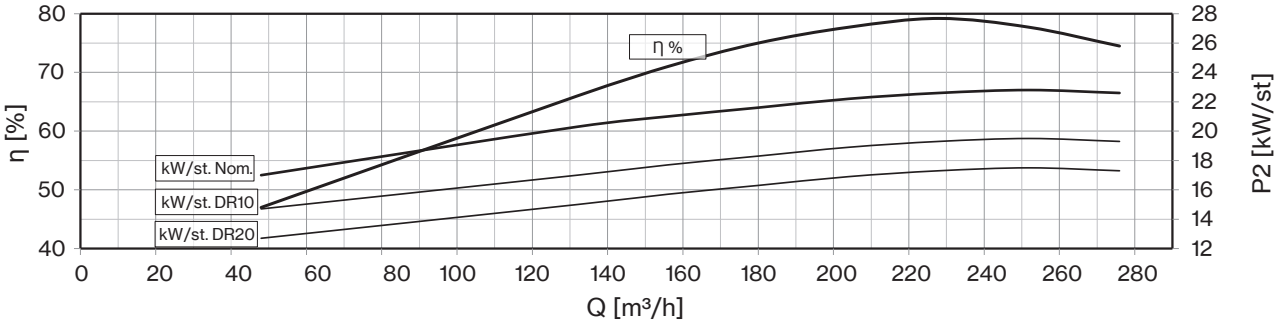




*Drinking water compatibility according DM 174*
*MEI ≥ 0,4 (regulation EU N. 547/2012)*
*Models with less than 3 stages reduce the % eff. of 5%*
*Hydraulic performance according to ISO 9906 grade 3B*

| 50 Hz - 2900 rpm | | | | | Q | | | | | | | | |
|---|---|---|---|---|---|---|---|---|---|---|---|---|---|
| TYPE | SUITABLE MOTOR 3~ 400V | | | l/min | 0 | 1000 | 3200 | 3600 | 4000 | 4400 | 4800 | 5000 | 5200 |
| | P2 | | CURRENT | l/sec | 0 | 16,7 | 53,3 | 60,0 | 66,7 | 73,3 | 80,0 | 83,3 | 86,7 |
| | HP | kW | A | m³/h | 0 | 60 | 192 | 216 | 240 | 264 | 288 | 300 | 312 |
| **10LM 250/01DR20** | 25 | 18,5 | 38,3 | H (m) | 31 | 31 | 27 | 25 | 23 | 21 | 18 | 17 | 14 |
| **10LM 250/01** | 40 | 30 | 61,1 | | 44 | 42 | 34 | 32 | 30 | 28 | 26 | 25 | 24 |
| **10LM 250/02DR20** | 50 | 37 | 75,8 | | 63 | 62 | 54 | 50 | 46 | 42 | 36 | 33 | 27 |
| **10LM 250/02** | 75 | 55 | 106,2 | | 88 | 84 | 67 | 64 | 59 | 56 | 52 | 50 | 48 |
| **10LM 250/03DR10** | 100 | 75 | 143,2 | | 107 | 107 | 93 | 86 | 80 | 73 | 65 | 59 | 53 |
| **10LM 250/03** | 125 | 92 | 175,1 | | 132 | 126 | 101 | 96 | 89 | 83 | 78 | 75 | 72 |
| **10LM 250/04DR10** | 125 | 92 | 175,1 | | 143 | 142 | 124 | 115 | 107 | 97 | 87 | 79 | 70 |
| **10LM 250/04D** | 150 | 110 | 211,0 | | 176 | 168 | 134 | 128 | 118 | 111 | 104 | 100 | 96 |
| **10LM 250/05DR10D** | 175 | 130 | 245,3 | | 179 | 178 | 155 | 144 | 134 | 121 | 109 | 99 | 88 |
| **10LM 250/05D** | 200 | 150 | 277,2 | | 220 | 210 | 168 | 160 | 148 | 139 | 130 | 125 | 120 |
| **10LM 250/06D** | 225 | 165 | 313,3 | | 264 | 252 | 202 | 192 | 178 | 167 | 156 | 150 | 144 |

| | |
|---|---|
| **Max Eff. % DR20 =** | 79 |
| **Max Eff. % DR10 =** | 79,5 |
| **Max Eff. %** | 79,3 |
| **Max kW / St. DR20 =** | 18 |
| **Max kW / St. DR10 =** | 22,5 |
| **Max kW / St.** | 27,4 |

| **NPSH (m)** | Q=25% | Q=50% | Q=75% | Q=100% |
|---|---|---|---|---|
| | 3,4 | 5 | 7,8 | 11,8 |

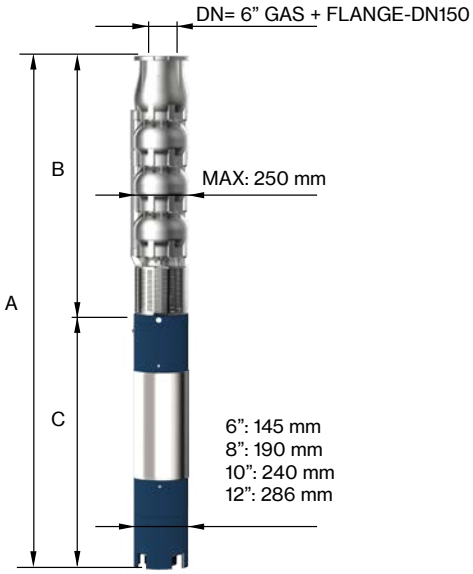


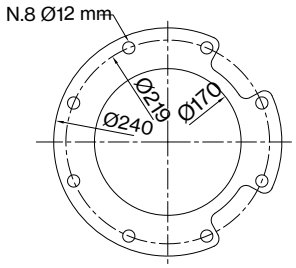


FOR COMMERCIAL TUBE
EXTERNAL DIAMETER: 168,3 mm

| TYPE 3~ | MOTOR BRACKET | DIMENSIONS (mm) | | | WEIGHT (kg) | |
|---|---|---|---|---|---|---|
| | | A | B | C | MOTOR | PUMP |
| **10LM 250/01DR20-6** | 6" NEMA | 1616 | 625 | 991 | 83 | 41 |
| **10LM 250/01-6** | | 1876 | 625 | 1251 | 108 | 41 |
| **10LM 250/02DR20-6** | | 2146 | 805 | 1341 | 118 | 57 |
| **10LM 250/02-8** | 8" NEMA | 2038 | 805 | 1233 | 200 | 57 |
| **10LM 250/03DR10-8** | | 2368 | 985 | 1383 | 230 | 72 |
| **10LM 250/03-8** | | 2568 | 985 | 1583 | 270 | 72 |
| **10LM 250/04DR10-8** | | 2748 | 1165 | 1583 | 270 | 88 |
| **10LM 250/04D-8** | | 2898 | 1165 | 1733 | 300 | 88 |
| **10LM 250/05DR10D** | 10" | 2979 | 1345 | 1634 | 385 | 103 |
| **10LM 250/05D** | | 2979 | 1345 | 1634 | 385 | 103 |
| **10LM 250/06D** | | 3379 | 1525 | 1854 | 444 | 119 |

*"DR" : reduced-diameter impellers*
*"D" Pump shaft in Duplex EN 1.4462*

# 10LM 250

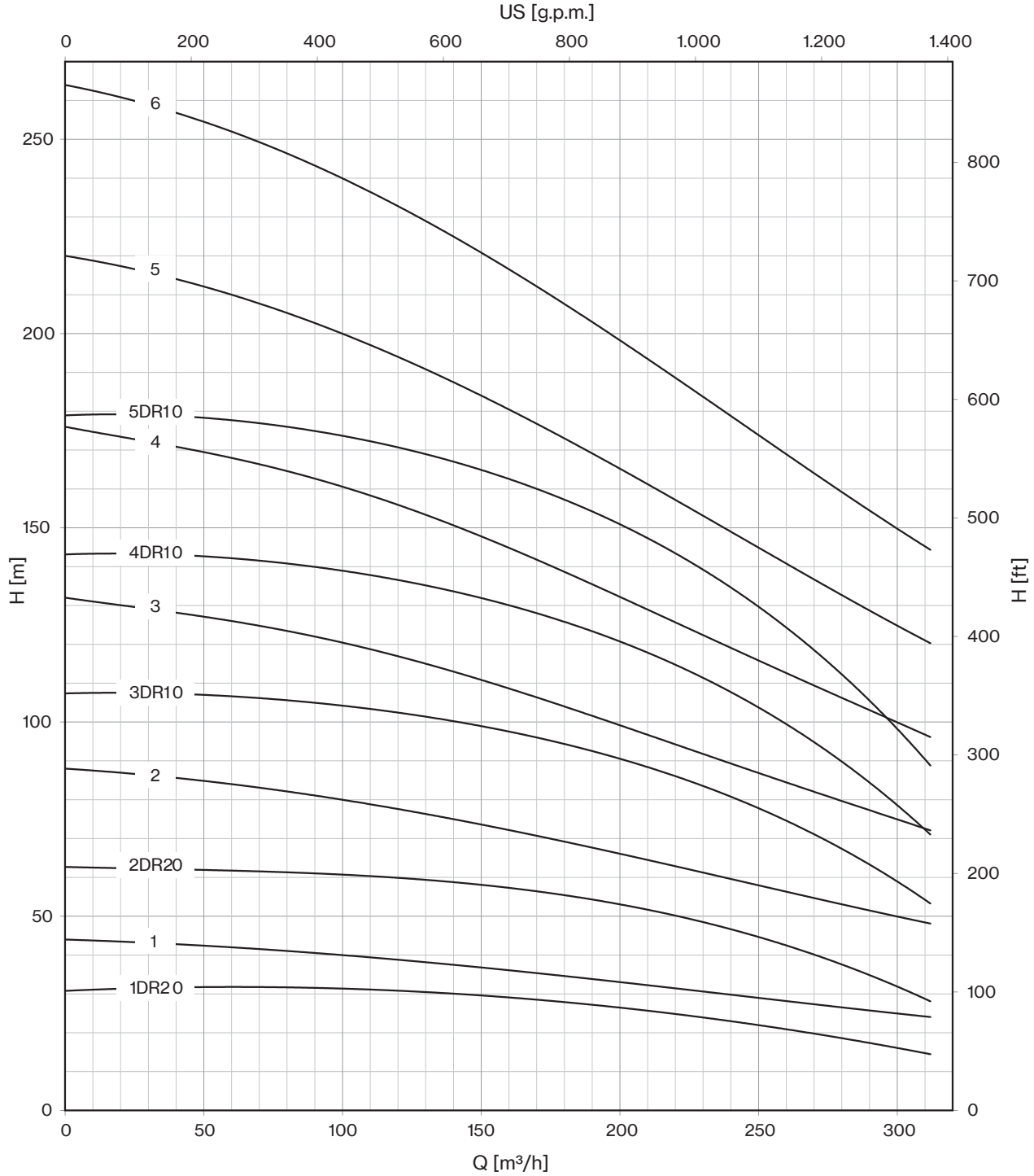


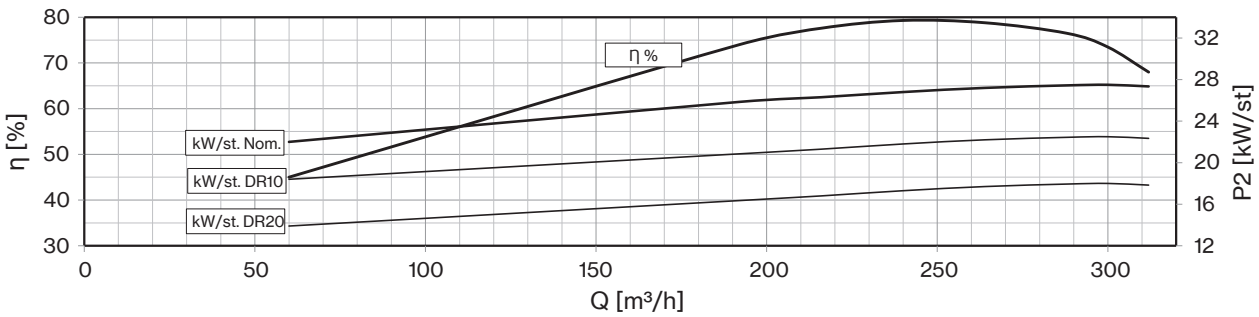




*Drinking water compatibility according DM 174*
*MEI ≥ 0,4 (regulation EU N. 547/2012)*
*Models with less than 3 stages reduce the % eff. of 5%*
*Hydraulic performance according to ISO 9906 grade 3B*

| 50 Hz - 2900 rpm | | | | | Q | | | | | | | | |
|---|---|---|---|---|---|---|---|---|---|---|---|---|---|
| TYPE | SUITABLE MOTOR 3~ 400V | | | l/min | 0 | 1000 | 3200 | 3600 | 4000 | 4400 | 4800 | 5000 | 5200 |
| | P2 | | CURRENT | l/sec | 0 | 16,7 | 53,3 | 60,0 | 66,7 | 73,3 | 80,0 | 83,3 | 86,7 |
| | HP | kW | A | m³/h | 0 | 60 | 192 | 216 | 240 | 264 | 288 | 300 | 312 |
| **10LM 250/07DR10D** | 225 | 165 | 313,3 | H (m) | 251 | 249 | 217 | 202 | 188 | 169 | 153 | 139 | 123 |
| **10LM 250/07D** | 300 | 220 | 430,0 | | 308 | 294 | 235 | 224 | 207 | 195 | 182 | 175 | 168 |
| **10LM 250/08D** | 300 | 220 | 430,0 | | 352 | 336 | 269 | 256 | 237 | 222 | 208 | 200 | 192 |
| **10LM 250/09D** | 340 | 250 | 481,0 | | 396 | 378 | 302 | 288 | 266 | 250 | 234 | 225 | 216 |
| **10LM 250/10D** | 400 | 300 | 551,0 | | 440 | 420 | 336 | 320 | 296 | 278 | 260 | 250 | 240 |
| **10LM 250/11D** | 450 | 330 | 620,0 | | 484 | 462 | 370 | 352 | 326 | 306 | 286 | 275 | 264 |
| **10LM 250/12D** | 450 | 330 | 620,0 | | 528 | 504 | 403 | 384 | 355 | 334 | 312 | 300 | 288 |

| | |
|---|---|
| **Max Eff. % DR20 =** | 79 |
| **Max Eff. % DR10 =** | 79,5 |
| **Max Eff. %** | 79,3 |
| **Max kW / St. DR20 =** | 18 |
| **Max kW / St. DR10 =** | 22,5 |
| **Max kW / St.** | 27,4 |

| **NPSH (m)** | Q=25% | Q=50% | Q=75% | Q=100% |
|---|---|---|---|---|
| | 3,4 | 5 | 7,8 | 11,8 |

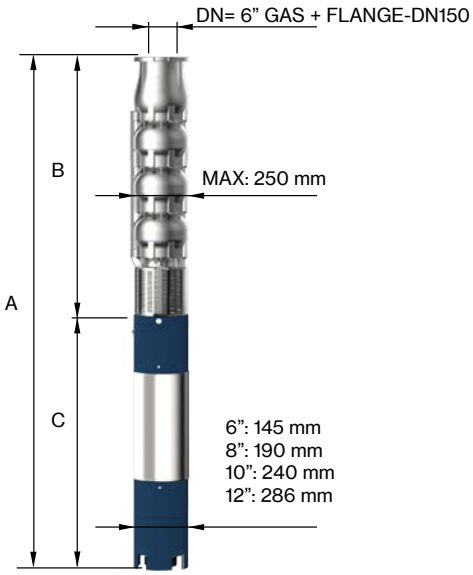


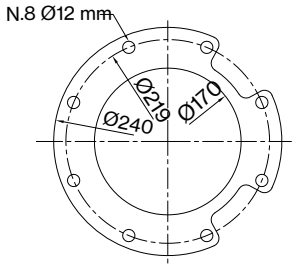


FOR COMMERCIAL TUBE
EXTERNAL DIAMETER: 168,3 mm

| TYPE 3~ | MOTOR BRACKET | DIMENSIONS (mm) | | | WEIGHT (kg) | |
|---|---|---|---|---|---|---|
| | | A | B | C | MOTOR | PUMP |
| **10LM 250/07DR10D** | 10" | 3559 | 1705 | 1854 | 444 | 134 |
| **10LM 250/07D-12** | 12" | 3815 | 1705 | 2110 | 700 | 134 |
| **10LM 250/08D-12** | | 3995 | 1885 | 2110 | 700 | 150 |
| **10LM 250/09D-12** | | 4345 | 2065 | 2280 | 775 | 165 |
| **10LM 250/10D-14** | 14" | 4525 | 2245 | 2280 | 775 | 181 |
| **10LM 250/11D-14** | | 4705 | 2425 | 2280 | 775 | 196 |
| **10LM 250/12D-14** | | 4765 | 2605 | 2160 | 906 | 212 |

*"DR" : reduced-diameter impellers*
*"D" Pump shaft in Duplex EN 1.4462*

# 10LM 250

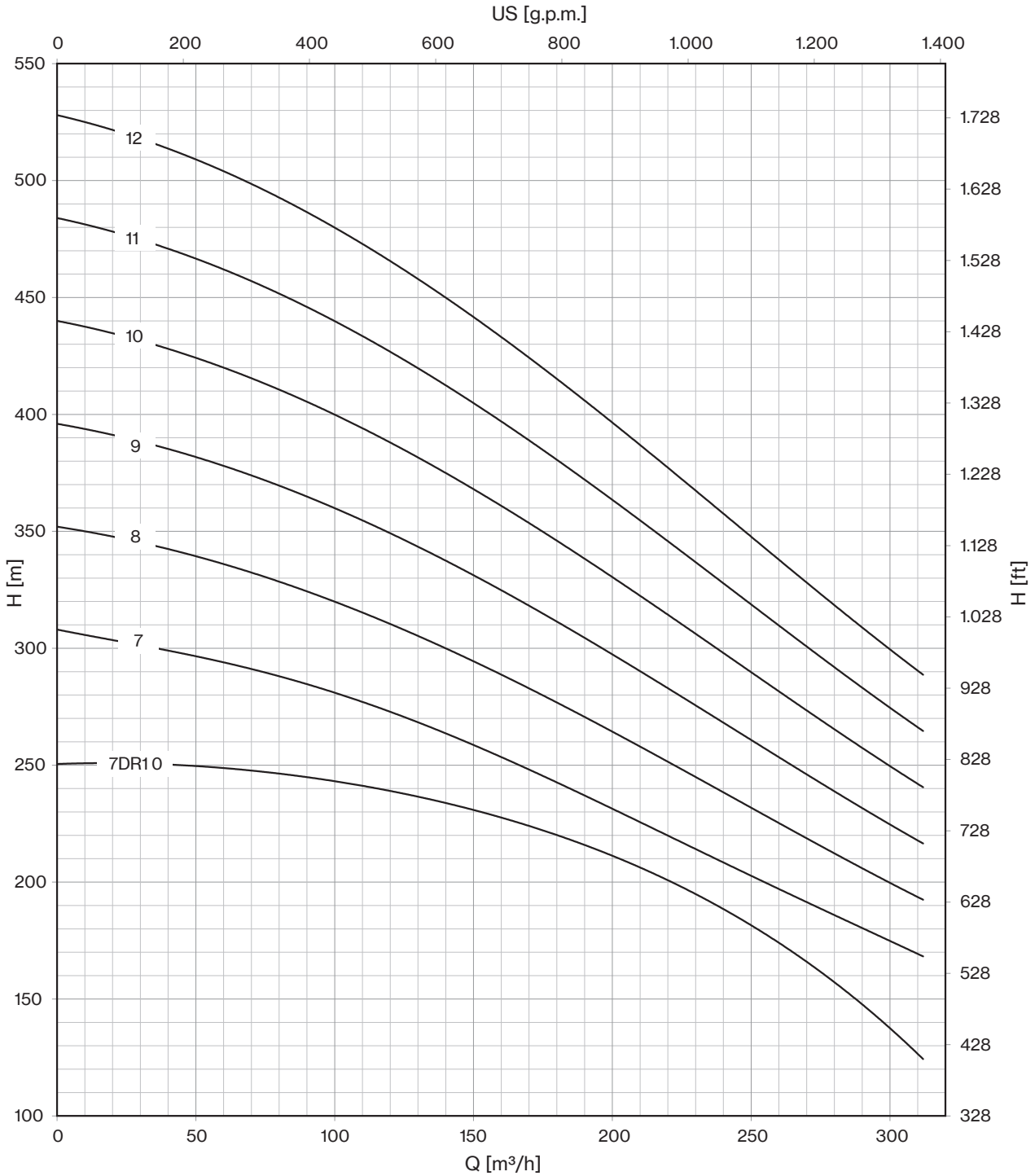


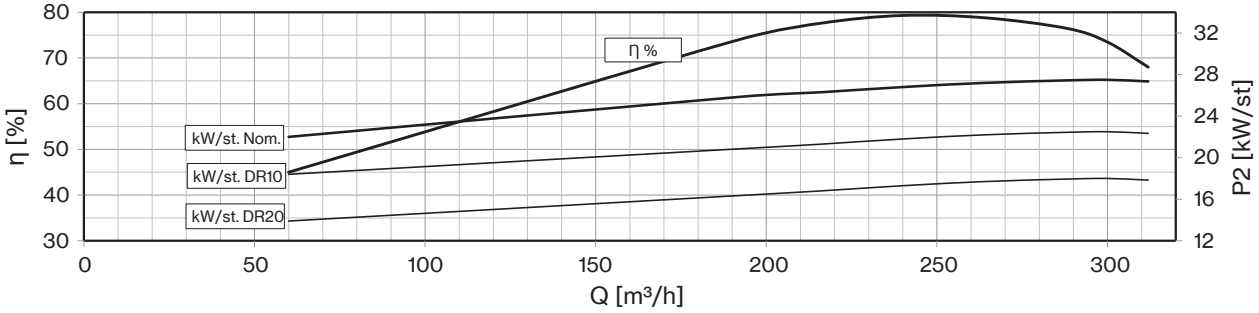




*Drinking water compatibility according DM 174*
*MEI ≥ 0,4 (regulation EU N. 547/2012)*
*Models with less than 3 stages reduce the % eff. of 5%*
*Hydraulic performance according to ISO 9906 grade 3B*

| 50 Hz - 2900 rpm | | | | | Q | | | | | | | | |
|---|---|---|---|---|---|---|---|---|---|---|---|---|---|
| TYPE | SUITABLE MOTOR 3~ 400V | | | l/min | 0 | 1000 | 3400 | 3800 | 4200 | 4600 | 5000 | 5400 | 5800 |
| | P2 | | CURRENT | l/sec | 0 | 16,7 | 56,7 | 63,3 | 70,0 | 76,7 | 83,3 | 90,0 | 96,7 |
| | HP | kW | A | m³/h | 0 | 60 | 204 | 228 | 252 | 276 | 300 | 324 | 348 |
| **10LM 275/01DR20** | 35 | 26 | 52,9 | H (m) | 36 | 36 | 28 | 26 | 25 | 23 | 21 | 19 | 16 |
| **10LM 275/01** | 50 | 37 | 75,8 | | 45 | 44 | 37 | 35 | 34 | 32 | 30 | 28 | 25 |
| **10LM 275/02DR20** | 75 | 55 | 106,2 | | 72 | 71 | 56 | 52 | 50 | 46 | 42 | 39 | 32 |
| **10LM 275/02** | 90 | 66 | 126,0 | | 90 | 87 | 73 | 70 | 67 | 63 | 60 | 56 | 50 |
| **10LM 275/03DR10** | 125 | 92 | 175,1 | | 122 | 121 | 97 | 92 | 88 | 82 | 77 | 72 | 62 |
| **10LM 275/03D** | 150 | 110 | 211,0 | | 135 | 131 | 110 | 105 | 101 | 95 | 90 | 85 | 75 |
| **10LM 275/04DR10D** | 175 | 130 | 245,3 | | 163 | 161 | 130 | 123 | 118 | 110 | 103 | 96 | 83 |
| **10LM 275/04D** | 200 | 150 | 277,2 | | 180 | 175 | 146 | 140 | 134 | 126 | 120 | 113 | 100 |
| **10LM 275/05DR10D** | 200 | 150 | 277,2 | | 204 | 202 | 162 | 154 | 147 | 137 | 129 | 120 | 104 |
| **10LM 275/05D** | 225 | 165 | 313,3 | | 225 | 219 | 183 | 175 | 168 | 158 | 150 | 141 | 125 |
| **10LM 275/06DR10D** | 250 | 185 | 342,2 | | 245 | 242 | 194 | 185 | 176 | 164 | 155 | 144 | 125 |
| **10LM 275/06D** | 300 | 220 | 430,0 | | 270 | 262 | 220 | 210 | 202 | 190 | 180 | 169 | 150 |

| | |
|---|---|
| **Max Eff. % DR20 =** | 76,1 |
| **Max Eff. % DR10 =** | 77,2 |
| **Max Eff. %** | 76,5 |
| **Max kW / St. DR20 =** | 25 |
| **Max kW / St. DR10 =** | 29 |
| **Max kW / St.** | 33 |

| **NPSH (m)** | Q=25% | Q=50% | Q=75% | Q=100% |
|---|---|---|---|---|
| | 3,4 | 5 | 7,8 | 11,8 |

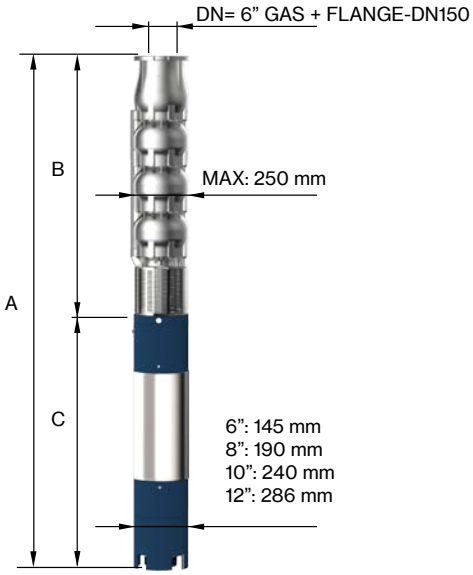


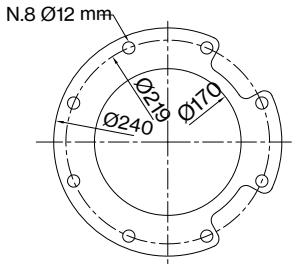


FOR COMMERCIAL TUBE
EXTERNAL DIAMETER: 168,3 mm

| TYPE 3~ | MOTOR BRACKET | DIMENSIONS (mm) | | | WEIGHT (kg) | |
|---|---|---|---|---|---|---|
| | | A | B | C | MOTOR | PUMP |
| **10LM 275/01DR20-6** | 6" NEMA | 1806 | 625 | 1181 | 100 | 41 |
| **10LM 275/01-6** | | 1966 | 625 | 1341 | 118 | 41 |
| **10LM 275/02DR20-8** | 8" NEMA | 2038 | 805 | 1233 | 200 | 56 |
| **10LM 275/02-8** | | 2107 | 805 | 1302 | 214 | 56 |
| **10LM 275/03DR10-8** | | 2568 | 985 | 1583 | 270 | 72 |
| **10LM 275/03D-8** | | 2718 | 985 | 1733 | 300 | 72 |
| **10LM 275/04DR10D** | 10" | 2799 | 1165 | 1634 | 385 | 87 |
| **10LM 275/04D** | | 2899 | 1165 | 1734 | 415 | 87 |
| **10LM 275/05DR10D** | | 3079 | 1345 | 1734 | 415 | 103 |
| **10LM 275/05D** | | 3199 | 1345 | 1854 | 444 | 103 |
| **10LM 275/06DR10D** | | 3509 | 1525 | 1984 | 480 | 118 |
| **10LM 275/06D** | | 3635 | 1525 | 2110 | 700 | 118 |

*"DR" : reduced-diameter impellers*
*"D" Pump shaft in Duplex EN 1.4462*

# 10LM 275

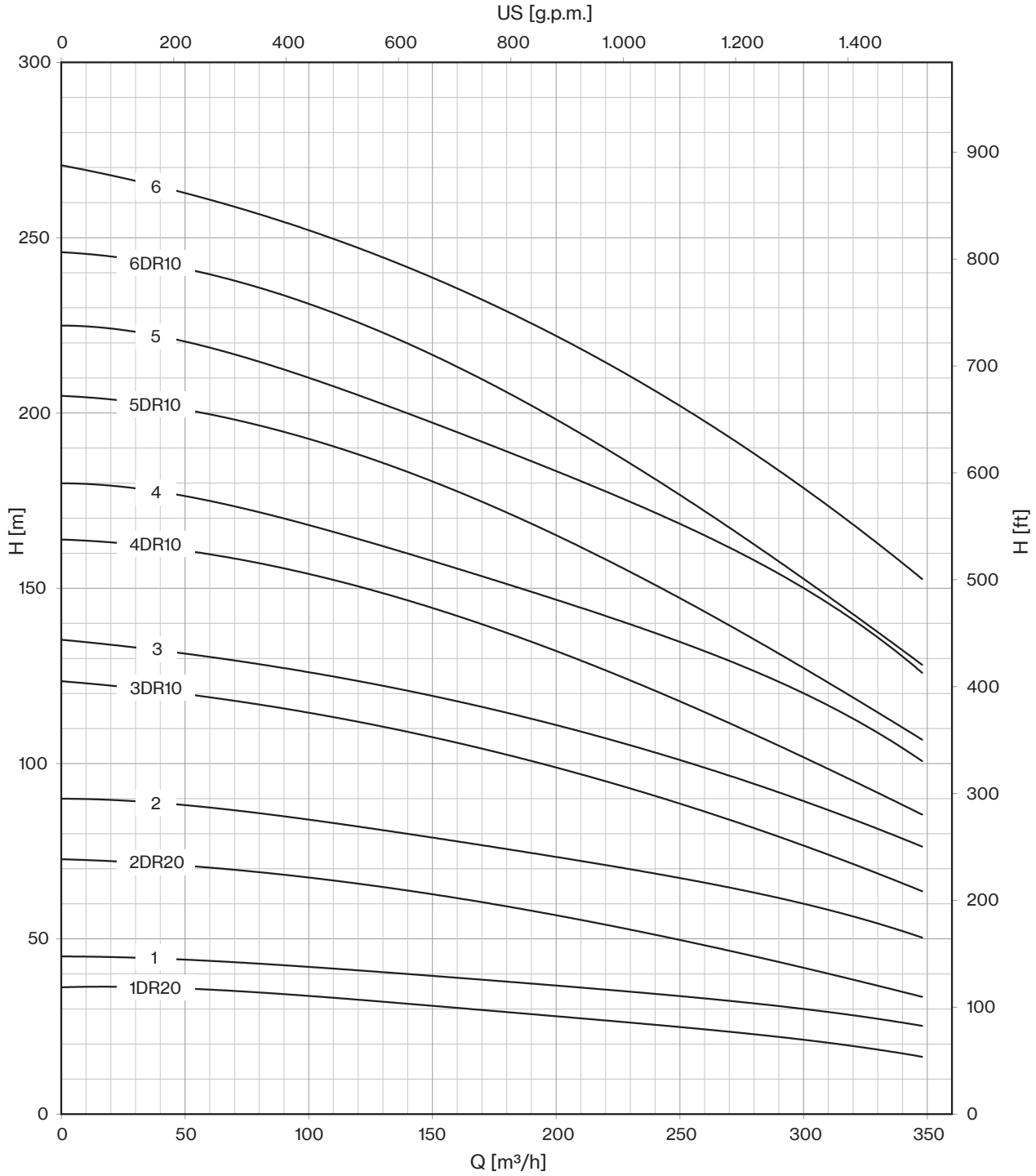


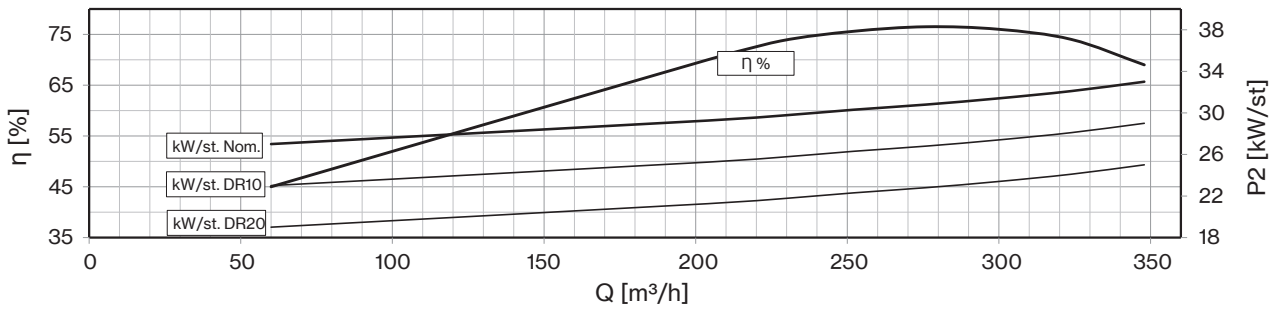




*Drinking water compatibility according DM 174*
*MEI ≥ 0,4 (regulation EU N. 547/2012)*
*Models with less than 3 stages reduce the % eff. of 5%*
*Hydraulic performance according to ISO 9906 grade 3B*

| 50 Hz - 2900 rpm | | | | | Q | | | | | | | | |
|---|---|---|---|---|---|---|---|---|---|---|---|---|---|
| TYPE | SUITABLE MOTOR 3~ 400V | | | l/min | 0 | 1000 | 3400 | 3800 | 4200 | 4600 | 5000 | 5400 | 5800 |
| | P2 | | CURRENT | l/sec | 0 | 16,7 | 56,7 | 63,3 | 70,0 | 76,7 | 83,3 | 90,0 | 96,7 |
| | HP | kW | A | m³/h | 0 | 60 | 204 | 228 | 252 | 276 | 300 | 324 | 348 |
| **10LM 275/07DR10D** | 300 | 220 | 430,0 | H (m) | 286 | 282 | 227 | 216 | 206 | 192 | 181 | 168 | 146 |
| **10LM 275/07D** | 340 | 250 | 481,0 | | 315 | 306 | 256 | 245 | 235 | 221 | 210 | 197 | 175 |
| **10LM 275/08D** | 400 | 300 | 551,0 | | 360 | 350 | 293 | 280 | 269 | 253 | 240 | 226 | 200 |
| **10LM 275/09D** | 400 | 300 | 551,0 | | 405 | 393 | 329 | 315 | 302 | 284 | 270 | 254 | 225 |
| **10LM 275/10D** | 450 | 330 | 620,0 | | 450 | 437 | 366 | 350 | 336 | 316 | 300 | 282 | 250 |
| **10LM 275/11D** | 500 | 370 | 693,0 | | 495 | 481 | 403 | 385 | 370 | 348 | 330 | 310 | 275 |
| **10LM 275/12D** | 550 | 400 | 798,0 | | 540 | 524 | 439 | 420 | 403 | 379 | 360 | 338 | 300 |

| | |
|---|---|
| **Max Eff. % DR20 =** | 76,1 |
| **Max Eff. % DR10 =** | 77,2 |
| **Max Eff. %** | 76,5 |
| **Max kW / St. DR20 =** | 25 |
| **Max kW / St. DR10 =** | 29 |
| **Max kW / St.** | 33 |

| **NPSH (m)** | Q=25% | Q=50% | Q=75% | Q=100% |
|---|---|---|---|---|
| | 3,4 | 5 | 7,8 | 11,8 |

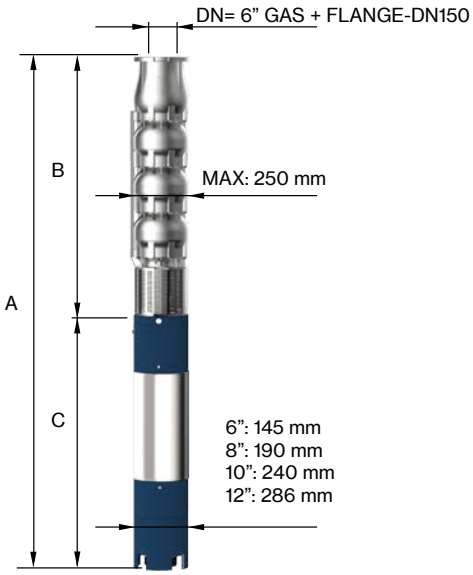


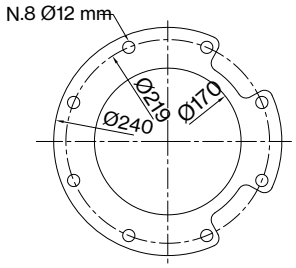


FOR COMMERCIAL TUBE
EXTERNAL DIAMETER: 168,3 mm

| TYPE 3~ | MOTOR BRACKET | DIMENSIONS (mm) | | | WEIGHT (kg) | |
|---|---|---|---|---|---|---|
| | | A | B | C | MOTOR | PUMP |
| **10LM 275/07DR10D-12** | 12" | 3815 | 1705 | 2110 | 700 | 134 |
| **10LM 275/07D-12** | | 3985 | 1705 | 2280 | 775 | 134 |
| **10LM 275/08D-14** | 14" | 4165 | 1885 | 2280 | 775 | 149 |
| **10LM 275/09D-14** | | 4345 | 2065 | 2280 | 775 | 165 |
| **10LM 275/10D-14** | | 4405 | 2245 | 2160 | 906 | 180 |
| **10LM 275/11D-14** | | 4585 | 2425 | 2160 | 906 | 196 |
| **10LM 275/12D-14** | | 4925 | 2605 | 2320 | 1010 | 211 |

*"DR" : reduced-diameter impellers*
*"D" Pump shaft in Duplex EN 1.4462*

# 10LM 275

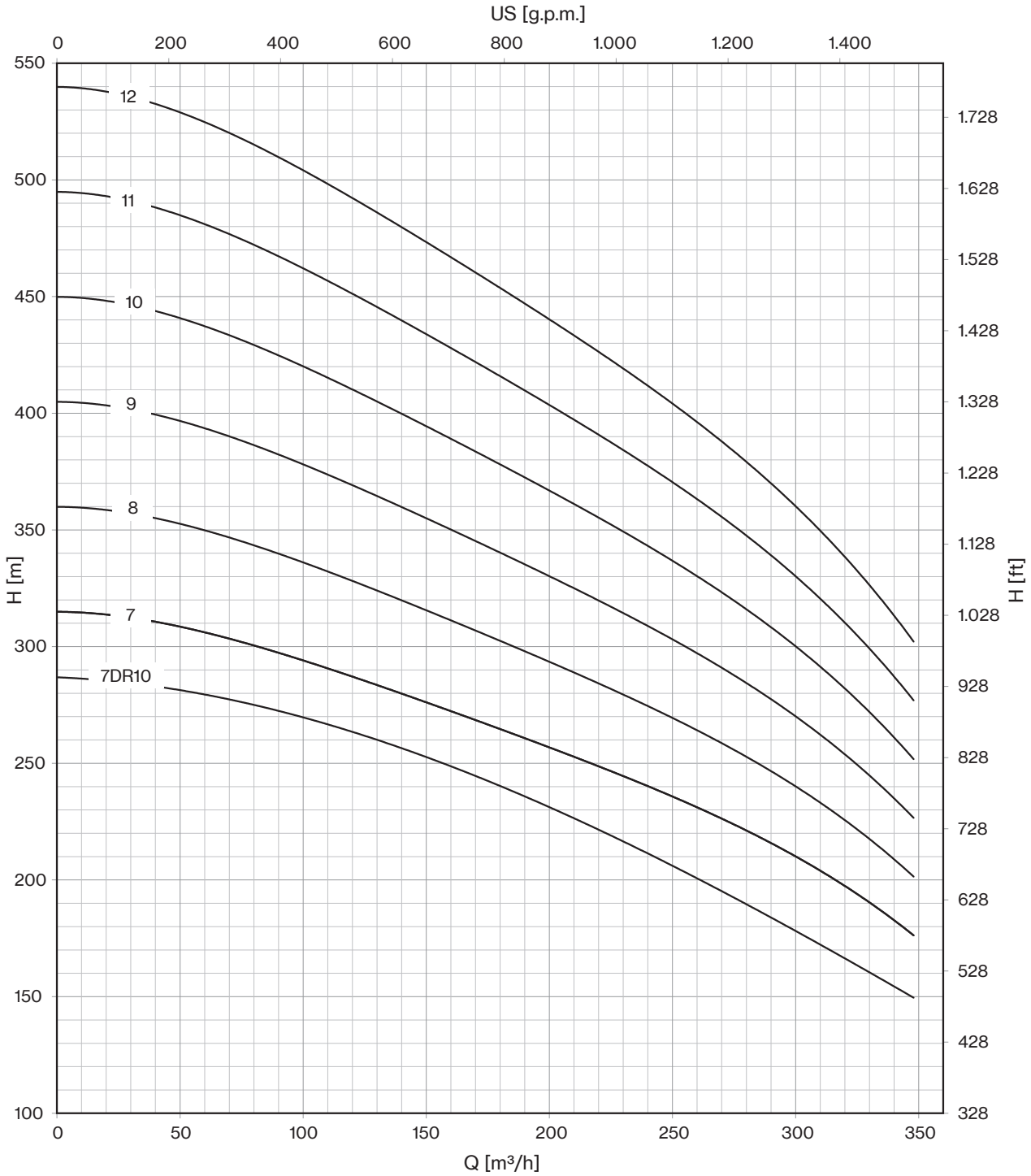


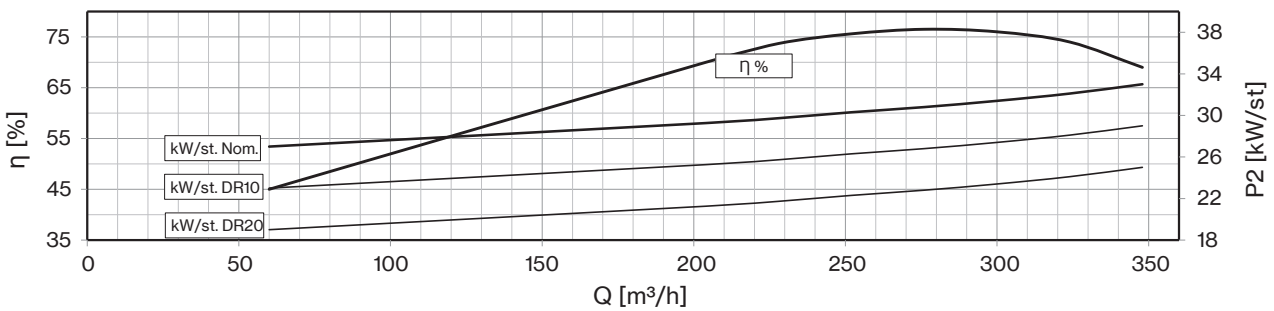




*Drinking water compatibility according DM 174*
*MEI ≥ 0,4 (regulation EU N. 547/2012)*
*Models with less than 3 stages reduce the % eff. of 5%*
*Hydraulic performance according to ISO 9906 grade 3B*

| 50 Hz - 2900 rpm | | | | | Q | | | | | | | | |
|---|---|---|---|---|---|---|---|---|---|---|---|---|---|
| TYPE | SUITABLE MOTOR 3~ 400V | | | l/min | 0 | 1500 | 4000 | 4500 | 5000 | 5500 | 6000 | 6500 | 7000 |
| | P2 | | CURRENT | l/sec | 0 | 25,0 | 66,7 | 75,0 | 83,3 | 91,7 | 100,0 | 108,3 | 116,7 |
| | HP | kW | A | m³/h | 0 | 90 | 240 | 270 | 300 | 330 | 360 | 390 | 420 |
| **12LM 360/01DR35** | 50 | 37 | 75,8 | H (m) | 41 | 40 | 37 | 35 | 33 | 32 | 29 | | |
| **12LM 360/01DR20** | 75 | 55 | 106,2 | | 49 | 48 | 47 | 45 | 44 | 42 | 40 | 38 | 34 |
| **12LM 360/01** | 90 | 66 | 126,0 | | 62 | 61 | 55 | 53 | 52 | 52 | 50 | 47 | 42 |
| **12LM 360/02DR35** | 100 | 75 | 143,2 | | 82 | 80 | 73 | 70 | 66 | 63 | 57 | | |
| **12LM 360/02DR20D** | 150 | 110 | 211,0 | | 98 | 96 | 93 | 90 | 87 | 84 | 80 | 75 | 68 |
| **12LM 360/02D** | 175 | 130 | 245,3 | | 124 | 122 | 109 | 106 | 104 | 103 | 100 | 93 | 84 |
| **12LM 360/03DR20D** | 200 | 150 | 277,2 | | 147 | 144 | 140 | 135 | 131 | 126 | 120 | 113 | 102 |
| **12LM 360/03DR10D** | 250 | 185 | 342,2 | | 165 | 162 | 152 | 149 | 144 | 140 | 132 | 126 | 120 |
| **12LM 360/03D** | 300 | 220 | 430,0 | | 186 | 183 | 164 | 159 | 156 | 155 | 150 | 140 | 126 |
| **12LM 360/04DR20D** | 300 | 220 | 430,0 | | 196 | 192 | 186 | 180 | 174 | 168 | 160 | 150 | 136 |
| **12LM 360/04DR10D** | 340 | 250 | 481,0 | | 220 | 216 | 202 | 198 | 192 | 186 | 176 | 168 | 160 |
| **12LM 360/04D** | 400 | 300 | 551,0 | | 248 | 244 | 218 | 212 | 208 | 206 | 200 | 186 | 168 |

| | |
|---|---|
| **Max Eff. % DR35 =** | 77,5 |
| **Max Eff. % DR20 =** | 80 |
| **Max Eff. % DR10 =** | 80,5 |
| **Max Eff. %** | 81 |
| **Max kW / St. DR35 =** | 36,80 |
| **Max kW / St. DR20 =** | 49,5 |
| **Max kW / St. DR10 =** | 55,2 |
| **Max kW / St.** | 64,2 |

| **NPSH (m)** | Q=25% | Q=50% | Q=75% | Q=100% |
|---|---|---|---|---|
| | 3,4 | 5 | 7,8 | 11,8 |

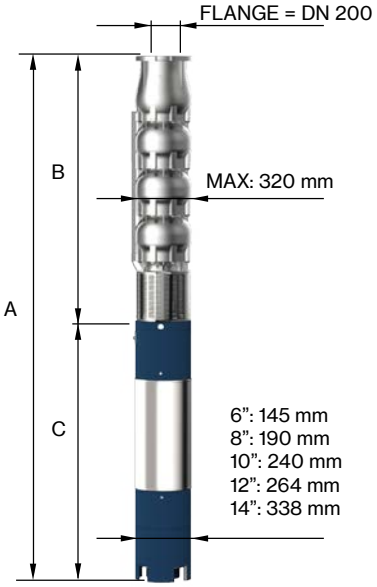


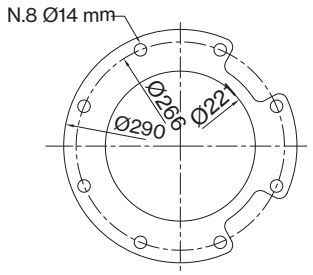


FOR COMMERCIAL TUBE
EXTERNAL DIAMETER: 219,1 mm

| TYPE 3~ | MOTOR BRACKET | DIMENSIONS (mm) | | | WEIGHT (kg) | |
|---|---|---|---|---|---|---|
| | | A | B | C | MOTOR | PUMP |
| **12LM 360/01DR35-6** | 6" NEMA | 2111 | 770 | 1341 | 118 | 79 |
| **12LM 360/01DR20-8** | 8" NEMA | 2003 | 770 | 1233 | 200 | 79 |
| **12LM 360/01-8** | | 2072 | 770 | 1302 | 214 | 79 |
| **12LM 360/02DR35-8** | | 2383 | 1000 | 1383 | 230 | 104 |
| **12LM 360/02DR20D-8** | | 2733 | 1000 | 1733 | 300 | 104 |
| **12LM 360/02D-10** | 10" | 2634 | 1000 | 1634 | 385 | 104 |
| **12LM 360/03DR20D-10** | | 2964 | 1230 | 1734 | 415 | 129 |
| **12LM 360/03DR10D-10** | | 3214 | 1230 | 1984 | 480 | 129 |
| **12LM 360/03D** | 12" | 3340 | 1230 | 2110 | 700 | 129 |
| **12LM 360/04DR20D** | | 3570 | 1460 | 2110 | 700 | 154 |
| **12LM 360/04DR10D** | | 3740 | 1460 | 2280 | 775 | 154 |
| **12LM 360/04D-14** | 14" | 3740 | 1460 | 2280 | 775 | 154 |

*"DR" : reduced-diameter impellers*
*"D" Pump shaft in Duplex EN 1.4462*

# 12LM 360

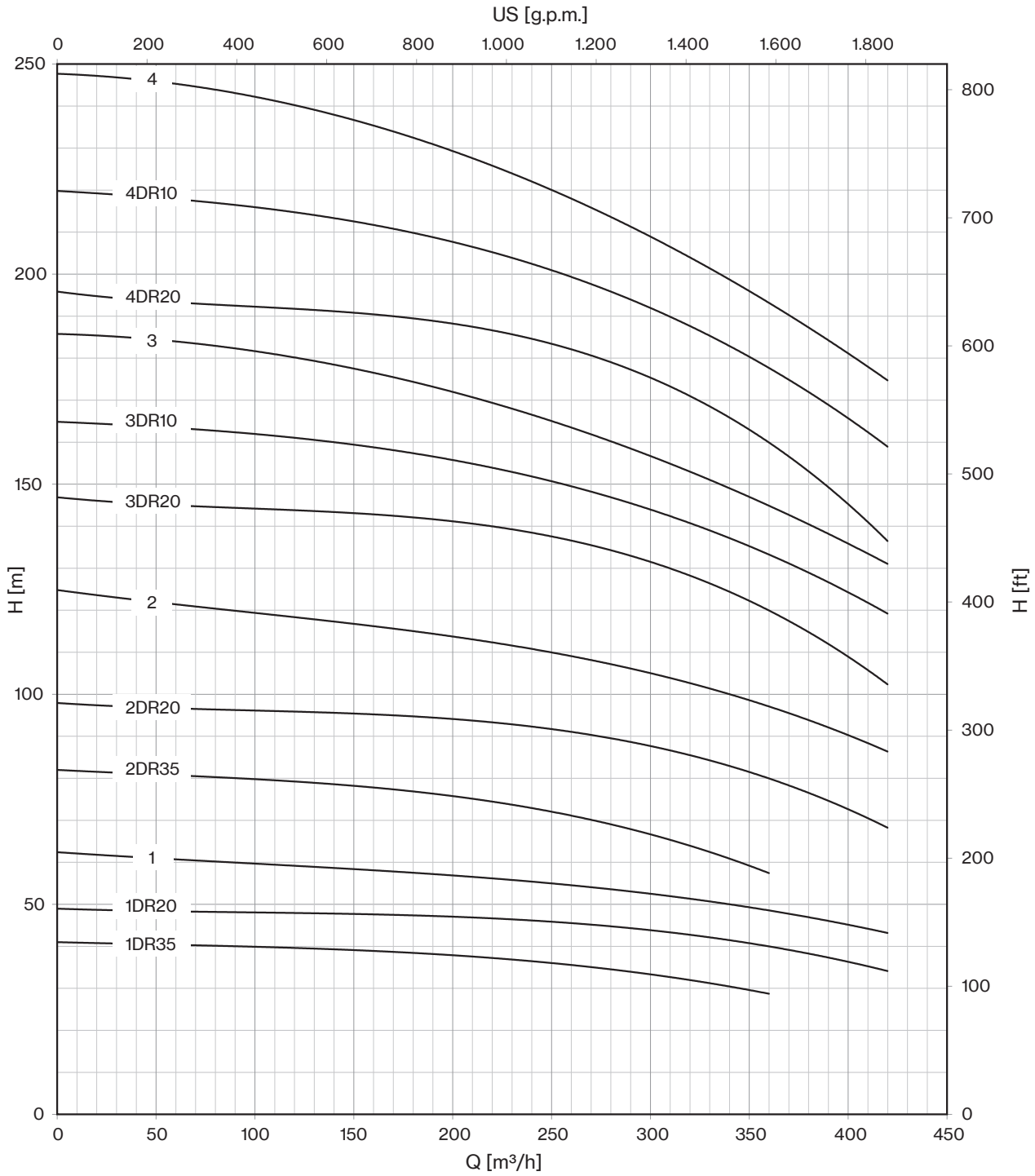


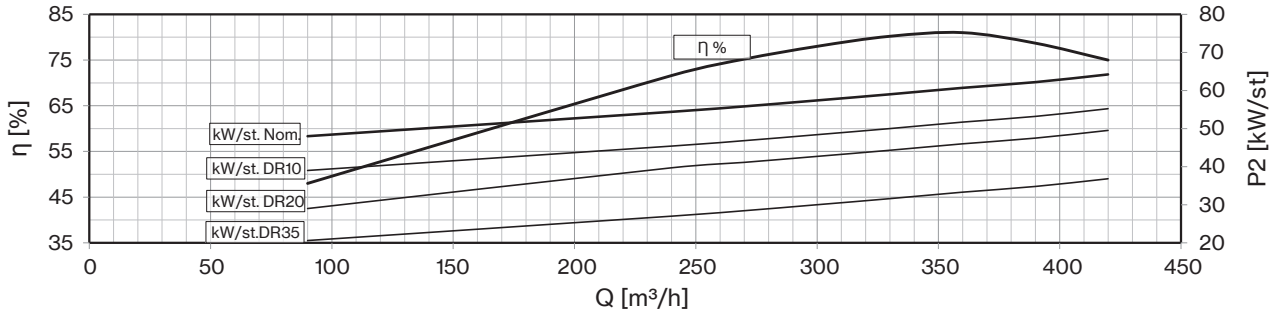




*Drinking water compatibility according DM 174*
*MEI ≥ 0,4 (regulation EU N. 547/2012)*
*Models with less than 3 stages reduce the % eff. of 5%*
*Hydraulic performance according to ISO 9906 grade 3B*

| 50 Hz - 2900 rpm | | | | | Q | | | | | | | | |
|---|---|---|---|---|---|---|---|---|---|---|---|---|---|
| TYPE | SUITABLE MOTOR 3~ 400V | | | l/min | 0 | 1500 | 4000 | 4500 | 5000 | 5500 | 6000 | 6500 | 7000 |
| | P2 | | CURRENT | l/sec | 0 | 25,0 | 66,7 | 75,0 | 83,3 | 91,7 | 100,0 | 108,3 | 116,7 |
| | HP | kW | A | m³/h | 0 | 90 | 240 | 270 | 300 | 330 | 360 | 390 | 420 |
| **12LM 360/05DR20D** | 340 | 250 | 481,0 | H (m) | 245 | 240 | 233 | 225 | 218 | 210 | 200 | 188 | 170 |
| **12LM 360/05DR10D** | 400 | 300 | 551,0 | | 275 | 270 | 253 | 248 | 240 | 233 | 220 | 210 | 200 |
| **12LM 360/05D** | 450 | 330 | 620,0 | | 310 | 305 | 273 | 265 | 260 | 258 | 250 | 233 | 210 |
| **12LM 360/06DR10D** | 500 | 370 | 693,0 | | 330 | 324 | 304 | 298 | 288 | 280 | 264 | 252 | 240 |
| **12LM 360/06D** | 550 | 400 | 798,0 | | 372 | 366 | 328 | 318 | 312 | 310 | 300 | 280 | 252 |
| **12LM 360/07DR10D** | 550 | 400 | 798,0 | | 385 | 378 | 354 | 347 | 336 | 326 | 308 | 294 | 280 |

| | |
|---|---|
| **Max Eff. % DR35 =** | 77,5 |
| **Max Eff. % DR20 =** | 80 |
| **Max Eff. % DR10 =** | 80,5 |
| **Max Eff. %** | 81 |
| **Max kW / St. DR35 =** | 36,80 |
| **Max kW / St. DR20 =** | 49,5 |
| **Max kW / St. DR10 =** | 55,2 |
| **Max kW / St.** | 64,2 |

| **NPSH (m)** | Q=25% | Q=50% | Q=75% | Q=100% |
|---|---|---|---|---|
| | 3,4 | 5 | 7,8 | 11,8 |

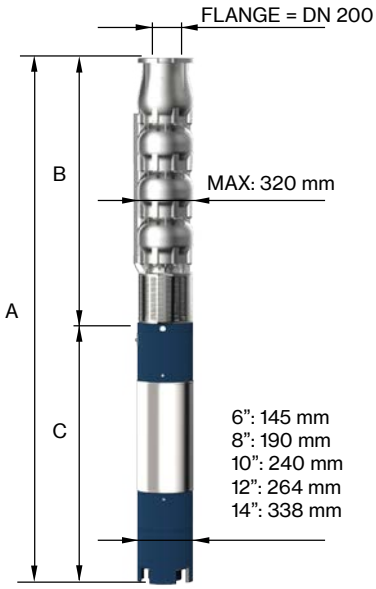


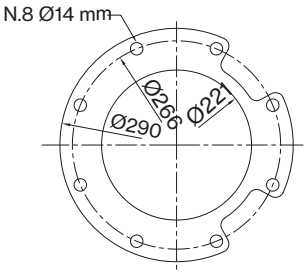


FOR COMMERCIAL TUBE
EXTERNAL DIAMETER: 219,1 mm

| TYPE 3~ | MOTOR BRACKET | DIMENSIONS (mm) | | | WEIGHT (kg) | |
|---|---|---|---|---|---|---|
| | | A | B | C | MOTOR | PUMP |
| **12LM 360/05DR20D** | 12" | 3970 | 1690 | 2280 | 775 | 179 |
| **12LM 360/05DR10D-14** | 14" | 3970 | 1690 | 2280 | 775 | 179 |
| **12LM 360/05D-14** | | 3850 | 1690 | 2160 | 906 | 179 |
| **12LM 360/06DR10D-14** | | 4240 | 1920 | 2320 | 1010 | 204 |
| **12LM 360/06D-14** | | 4380 | 1920 | 2460 | 1105 | 204 |
| **12LM 360/07DR10D-14** | | 4610 | 2150 | 2460 | 1105 | 229 |

*"DR" : reduced-diameter impellers*
*"D" Pump shaft in Duplex EN 1.4462*

# 12LM 360

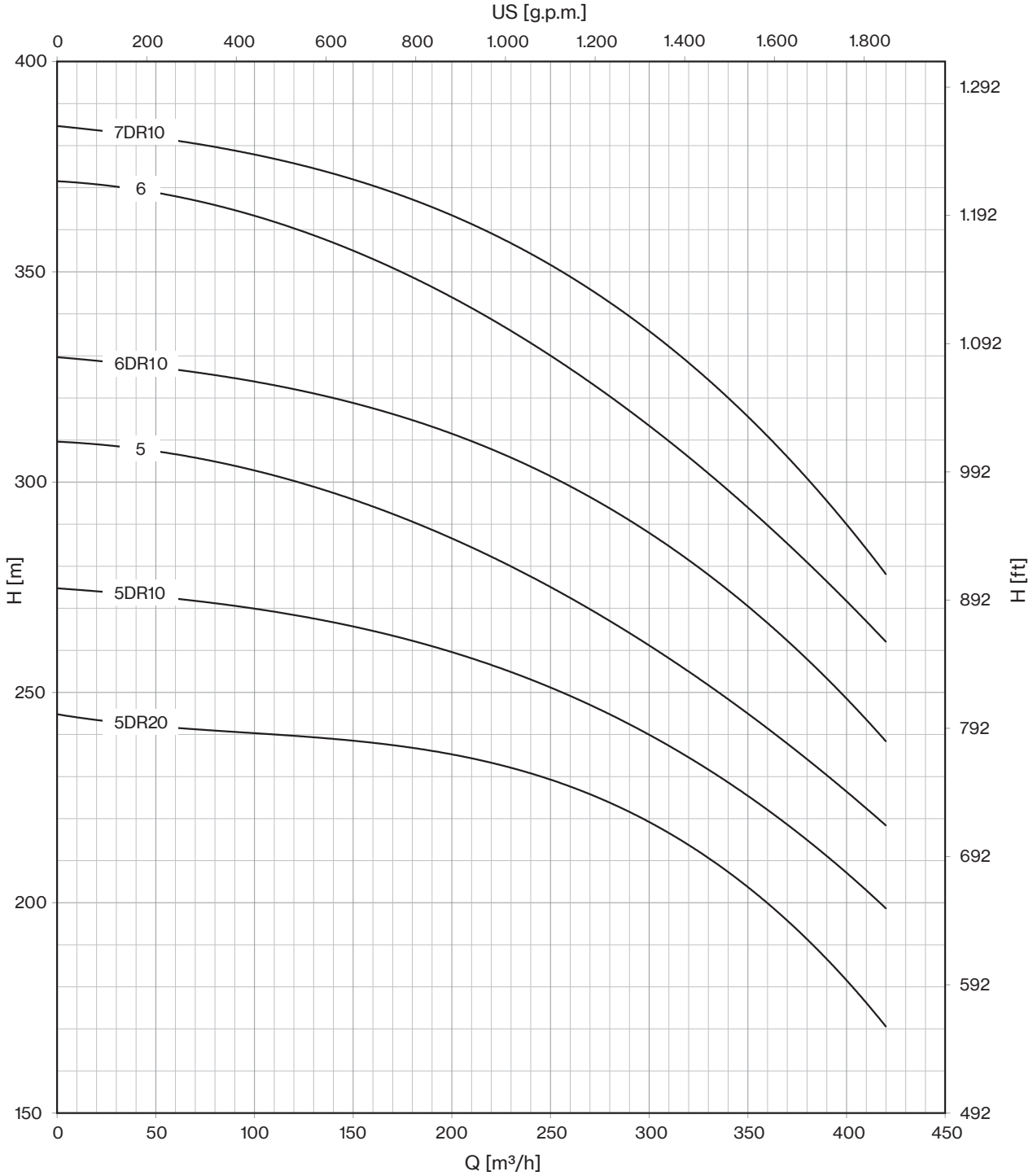


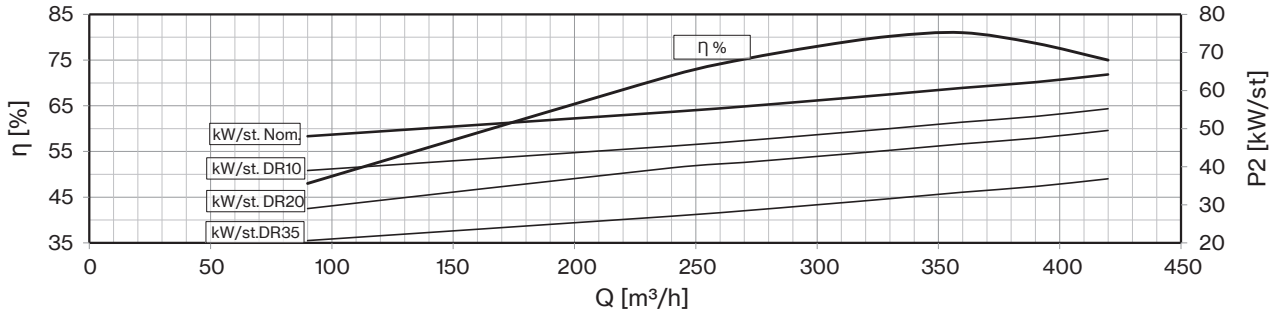




*Drinking water compatibility according DM 174*
*MEI ≥ 0,4 (regulation EU N. 547/2012)*
*Models with less than 3 stages reduce the % eff. of 5%*
*Hydraulic performance according to ISO 9906 grade 3B*

| 50 Hz - 2900 rpm | | | | | Q | | | | | | | | |
|---|---|---|---|---|---|---|---|---|---|---|---|---|---|
| TYPE | SUITABLE MOTOR 3~ 400V | | | l/min | 0 | 2000 | 6000 | 6500 | 7000 | 7500 | 8000 | 8500 | 9000 |
| | P2 | | CURRENT | l/sec | 0 | 33,3 | 100,0 | 108,3 | 116,7 | 125,0 | 133,3 | 141,7 | 150,0 |
| | HP | kW | A | m³/h | 0 | 120 | 360 | 390 | 420 | 450 | 480 | 510 | 540 |
| **12LM 400/01DR30** | 50 | 37 | 75,8 | H (m) | 43 | 42 | 32 | 30 | 27 | 24 | | | |
| **12LM 400/01DR20** | 75 | 55 | 106,2 | | 47 | 45 | 37 | 35 | 33 | 30 | 26 | 22 | |
| **12LM 400/01DR10** | 75 | 55 | 106,2 | | 53 | 52 | 42 | 40 | 38 | 36 | 32 | 28 | |
| **12LM 400/01** | 90 | 66 | 126,0 | | 58 | 57 | 46 | 44 | 42 | 40 | 37 | 31 | 27 |
| **12LM 400/02DR30** | 100 | 75 | 143,2 | | 86 | 84 | 64 | 59 | 54 | 48 | | | |
| **12LM 400/02DR20** | 125 | 92 | 175,1 | | 94 | 90 | 73 | 69 | 65 | 59 | 52 | 44 | |
| **12LM 400/02DR10D** | 150 | 110 | 211,0 | | 106 | 104 | 84 | 80 | 76 | 71 | 64 | 56 | |
| **12LM 400/02D** | 175 | 130 | 245,3 | | 116 | 114 | 92 | 88 | 84 | 80 | 73 | 62 | 54 |
| **12LM 400/03DR20D** | 200 | 150 | 277,2 | | 141 | 135 | 110 | 104 | 98 | 89 | 78 | 66 | |
| **12LM 400/03DR10D** | 225 | 165 | 313,3 | | 159 | 156 | 126 | 120 | 114 | 107 | 96 | 84 | |
| **12LM 400/03D** | 250 | 185 | 342,2 | | 174 | 171 | 138 | 132 | 126 | 120 | 110 | 93 | 81 |

| | |
|---|---|
| **Max Eff. % DR30 =** | 81,2 |
| **Max Eff. % DR20 =** | 81,8 |
| **Max Eff. % DR10 =** | 82,7 |
| **Max Eff. %** | 81,6 |
| **Max Eff. % A =** | 82,5 |
| **Max kW / St. DR30 =** | 37 |
| **Max kW / St. DR20 =** | 45,6 |
| **Max kW / St. DR10 =** | 53 |
| **Max kW / St.** | 60,4 |
| **Max kW / St. A =** | 67 |

| **NPSH (m)** | Q=25% | Q=50% | Q=75% | Q=100% |
|---|---|---|---|---|
| | 3,4 | 5 | 7,8 | 11,8 |

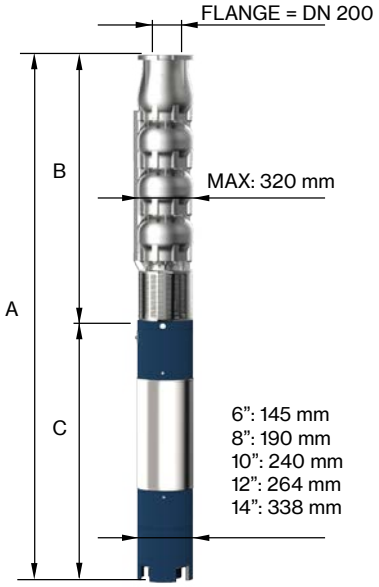


| TYPE 3~ | MOTOR BRACKET | DIMENSIONS (mm) | | | WEIGHT (kg) | |
|---|---|---|---|---|---|---|
| | | A | B | C | MOTOR | PUMP |
| **12LM 400/01DR30-6** | 6" NEMA | 2111 | 770 | 1341 | 118 | 79 |
| **12LM 400/01DR20-8** | 8" NEMA | 2003 | 770 | 1233 | 200 | 79 |
| **12LM 400/01DR10-8** | | 2003 | 770 | 1233 | 200 | 79 |
| **12LM 400/01-8** | | 2072 | 770 | 1302 | 214 | 79 |
| **12LM 400/02DR30-8** | | 2383 | 1000 | 1383 | 230 | 104 |
| **12LM 400/02DR20-8** | | 2583 | 1000 | 1583 | 270 | 104 |
| **12LM 400/02DR10D-8** | | 2733 | 1000 | 1733 | 300 | 104 |
| **12LM 400/02D-10** | 10" | 2634 | 1000 | 1634 | 385 | 104 |
| **12LM 400/03DR20D-10** | | 2964 | 1230 | 1734 | 415 | 129 |
| **12LM 400/03DR10D-10** | | 3084 | 1230 | 1854 | 444 | 129 |
| **12LM 400/03D-10** | | 3214 | 1230 | 1984 | 480 | 129 |

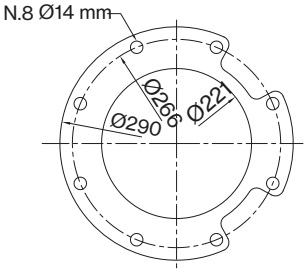


FOR COMMERCIAL TUBE
EXTERNAL DIAMETER: 219,1 mm

*"DR" : reduced-diameter impellers*
*"D" Pump shaft in Duplex EN 1.4462*

# 12LM 400

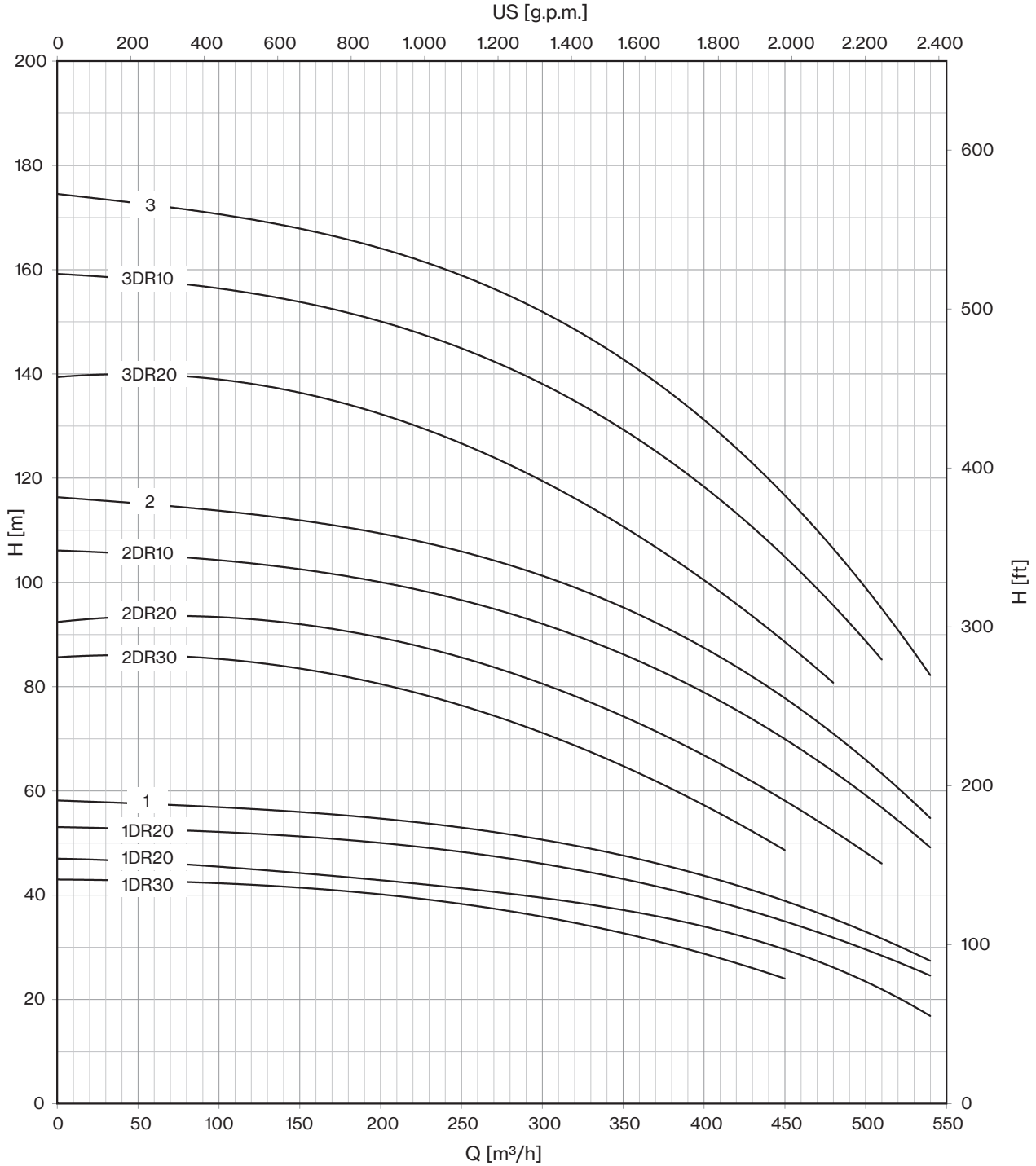


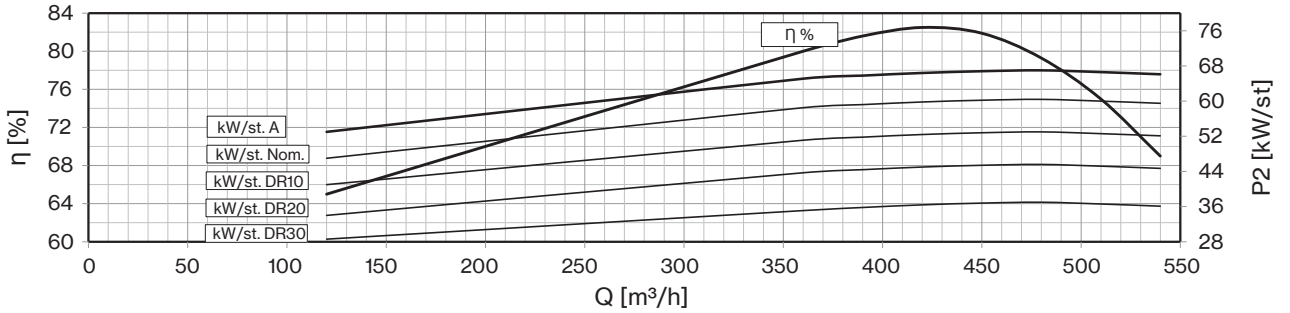




*Drinking water compatibility according DM 174*
*MEI ≥ 0,4 (regulation EU N. 547/2012)*
*Models with less than 3 stages reduce the % eff. of 5%*
*Hydraulic performance according to ISO 9906 grade 3B*

| 50 Hz - 2900 rpm | | | | | Q | | | | | | | | |
|---|---|---|---|---|---|---|---|---|---|---|---|---|---|
| TYPE | SUITABLE MOTOR 3~ 400V | | | l/min | 0 | 2000 | 6000 | 6500 | 7000 | 7500 | 8000 | 8500 | 9000 |
| | P2 | | CURRENT | l/sec | 0 | 33,3 | 100,0 | 108,3 | 116,7 | 125,0 | 133,3 | 141,7 | 150,0 |
| | HP | kW | A | m³/h | 0 | 120 | 360 | 390 | 420 | 450 | 480 | 510 | 540 |
| **12LM 400/04DR20D** | 250 | 185 | 342,2 | H (m) | 188 | 180 | 146 | 138 | 130 | 118 | 104 | 88 | |
| **12LM 400/04DR10D** | 300 | 220 | 430,0 | | 212 | 208 | 168 | 160 | 152 | 142 | 128 | 112 | |
| **12LM 400/04D** | 340 | 250 | 481,0 | | 232 | 228 | 184 | 176 | 168 | 160 | 146 | 124 | 108 |
| **12LM 400/05DR10D** | 400 | 300 | 551,0 | | 265 | 260 | 210 | 200 | 190 | 178 | 160 | 140 | |
| **12LM 400/05D** | 450 | 330 | 620,0 | | 290 | 285 | 230 | 220 | 210 | 200 | 183 | 155 | 135 |
| **12LM 400/05AD** | 500 | 370 | 693,0 | | 305 | 300 | 250 | 240 | 230 | 223 | 205 | 195 | 160 |
| **12LM 400/06D** | 500 | 370 | 693,0 | | 348 | 342 | 276 | 264 | 252 | 240 | 220 | 186 | 162 |

| | |
|---|---|
| **Max Eff. % DR30 =** | 81,2 |
| **Max Eff. % DR20 =** | 81,8 |
| **Max Eff. % DR10 =** | 82,7 |
| **Max Eff. %** | 81,6 |
| **Max Eff. % A =** | 82,5 |
| **Max kW / St. DR30 =** | 37 |
| **Max kW / St. DR20 =** | 45,6 |
| **Max kW / St. DR10 =** | 53 |
| **Max kW / St.** | 60,4 |
| **Max kW / St. A =** | 67 |

| **NPSH (m)** | Q=25% | Q=50% | Q=75% | Q=100% |
|---|---|---|---|---|
| | 3,4 | 5 | 7,8 | 11,8 |

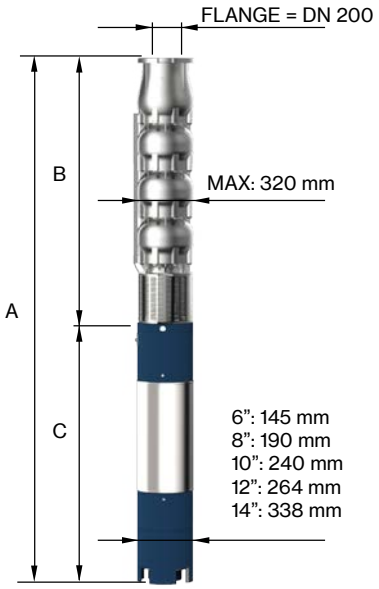


| TYPE 3~ | MOTOR BRACKET | DIMENSIONS (mm) | | | WEIGHT (kg) | |
|---|---|---|---|---|---|---|
| | | A | B | C | MOTOR | PUMP |
| **12LM 400/04DR20D** | 12" | 3444 | 1460 | 1984 | 480 | 154 |
| **12LM 400/04DR10D** | | 3570 | 1460 | 2110 | 700 | 154 |
| **12LM 400/04D** | | 3740 | 1460 | 2280 | 775 | 154 |
| **12LM 400/05 DR10D-14** | 14" | 3970 | 1690 | 2280 | 775 | 179 |
| **12LM 400/05D-14** | | 3850 | 1690 | 2160 | 906 | 179 |
| **12LM 400/05AD-14** | | 4010 | 1690 | 2320 | 1010 | 179 |
| **12LM 400/06D-14** | | 4240 | 1920 | 2320 | 1010 | 204 |

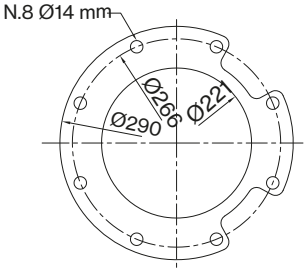


FOR COMMERCIAL TUBE
EXTERNAL DIAMETER: 219,1 mm

*"DR" : reduced-diameter impellers*
*"D" Pump shaft in Duplex EN 1.4462*

# 12LM 400

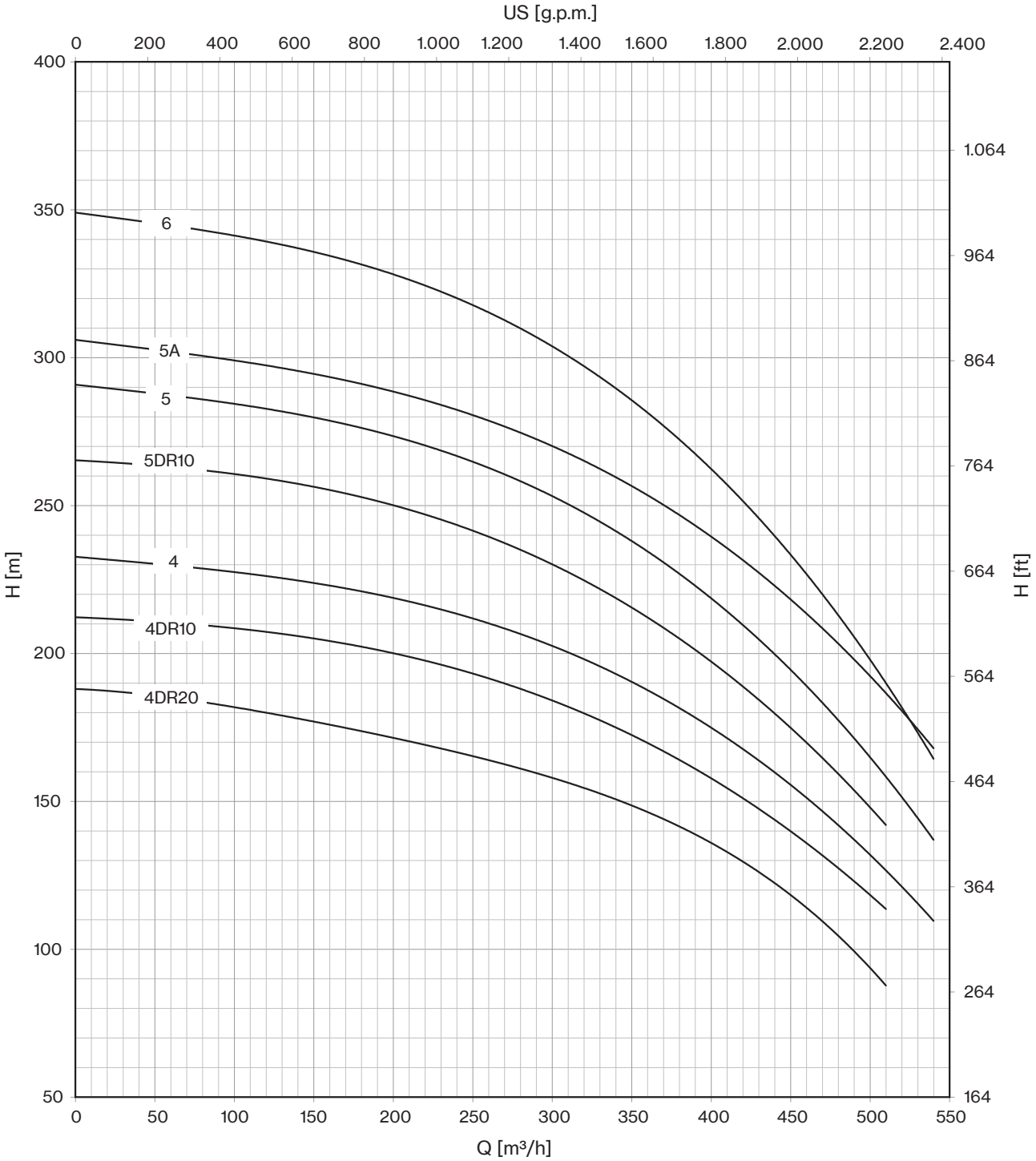


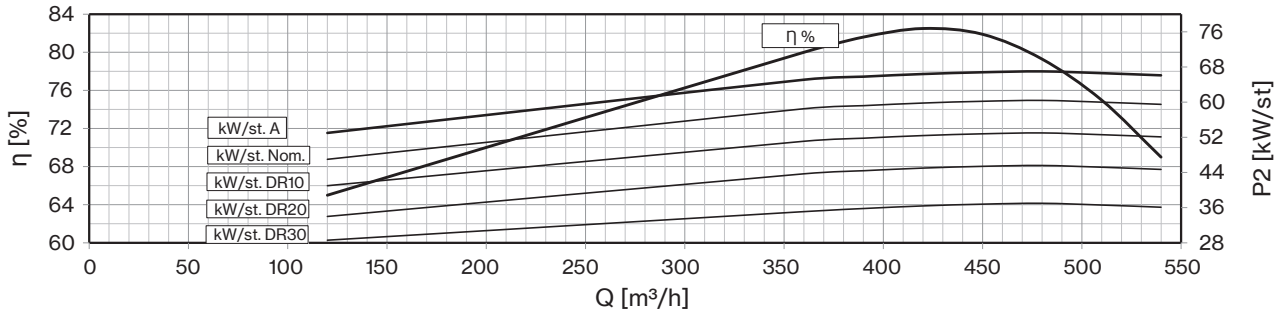




*Drinking water compatibility according DM 174*
*MEI ≥ 0,4 (regulation EU N. 547/2012)*
*Models with less than 3 stages reduce the % eff. of 5%*
*Hydraulic performance according to ISO 9906 grade 3B*

| 50 Hz - 2900 rpm | | | | | Q | | | | | | | | |
|---|---|---|---|---|---|---|---|---|---|---|---|---|---|
| TYPE | SUITABLE MOTOR 3~ 400V | | | l/min | 0 | 1333 | 2667 | 4000 | 5333 | 6667 | 8000 | 8500 | 9667 |
| | P2 | | CURRENT | l/sec | 0 | 22,2 | 44,5 | 66,7 | 88,9 | 111,1 | 133,3 | 141,8 | 161,2 |
| | HP | kW | A | m³/h | 0 | 80 | 160 | 240 | 320 | 400 | 480 | 510 | 580 |
| **E14 A/1D** | 90 | 66 | 126,0 | H (m) | 71,8 | 66,5 | 62,5 | 58,7 | 54,4 | 49,0 | 41,6 | 38,2 | |
| **E14 A/1C** | 100 | 75 | 143,2 | | 76,8 | 71,7 | 67,5 | 63,8 | 59,6 | 54,6 | 47,9 | 45,0 | 39,0 |
| **E14 A/1B** | 125 | 92 | 175,1 | | 85,1 | 79,9 | 75,6 | 71,8 | 67,8 | 63,3 | 57,7 | 55,1 | 48,2 |
| **E14 A/1A** | 150 | 110 | 211,0 | | 97,1 | 90,8 | 85,5 | 80,4 | 75,6 | 70,7 | 65,4 | 63,0 | 57,6 |
| **E14 A/1** | 175 | 130 | 245,3 | | 108,6 | 99,3 | 92,3 | 87,0 | 82,5 | 78,0 | 73,0 | 70,8 | 64,1 |
| **E14 A/2D** | 175 | 130 | 245,3 | | 143,5 | 133,0 | 125,0 | 117,4 | 108,8 | 98,0 | 83,2 | 76,4 | |
| **E14 A/2C** | 200 | 150 | 277,2 | | 153,6 | 143,4 | 135,0 | 127,6 | 119,1 | 109,1 | 95,8 | 90,0 | 78,0 |
| **E14 A/2B** | 250 | 185 | 342,2 | | 170,2 | 159,8 | 151,2 | 143,6 | 135,6 | 126,5 | 115,4 | 110,2 | 96,4 |
| **E14 A/2A** | 300 | 220 | 430,0 | | 194,3 | 181,6 | 171,0 | 160,8 | 151,2 | 141,4 | 130,8 | 126,0 | 115,2 |
| **E14 A/2** | 340 | 250 | 481,0 | | 217,3 | 198,6 | 184,6 | 174,0 | 165,0 | 156,0 | 146,0 | 141,6 | 128,2 |

| | |
|---|---|
| **Max Eff. %** | 82,3 |
| **Max KW / St. D (230mm) =** | 64,9 |
| **Max KW / St. C (238mm) =** | 74,0 |
| **Max KW / St. B (251mm) =** | 90,8 |
| **Max KW / St. A (268mm) =** | 109,1 |
| **Max KW / St. - (276mm) =** | 119,3 |

| **NPSH (m)** | Q=25% | Q=50% | Q=75% | Q=100% |
|---|---|---|---|---|
| | 5,8 | 6,4 | 9,4 | 15,3 |

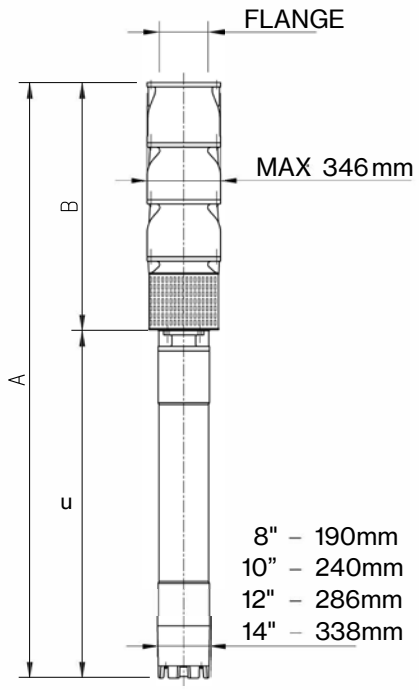


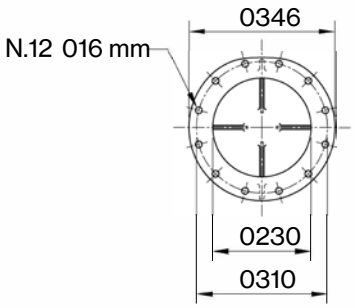


| TYPE 3~ | MOTOR BRACKET | DIMENSIONS (mm) | | | WEIGHT (kg) | |
|---|---|---|---|---|---|---|
| | | A | B | C | MOTOR | PUMP |
| **E14 A/1D-8** | 8" NEMA | 2237 | 935 | 1302 | 214 | 184 |
| **E14 A/1C-8** | | 2318 | 935 | 1383 | 230 | 184 |
| **E14 A/1B-8** | | 2518 | 935 | 1583 | 270 | 184 |
| **E14 A/1A-8** | | 2668 | 935 | 1733 | 300 | 184 |
| **E14 A/1-10** | 10" | 2569 | 935 | 1634 | 385 | 184 |
| **E14 A/2D-10** | | 2809 | 1175 | 1634 | 385 | 260 |
| **E14 A/2C-10** | | 2909 | 1175 | 1734 | 415 | 260 |
| **E14 A/2B-10** | | 3159 | 1175 | 1984 | 480 | 260 |
| **E14 A/2A-12** | 12" | 3285 | 1175 | 2110 | 700 | 260 |
| **E14 A/2-12** | | 3455 | 1175 | 2280 | 775 | 260 |

# E14 A

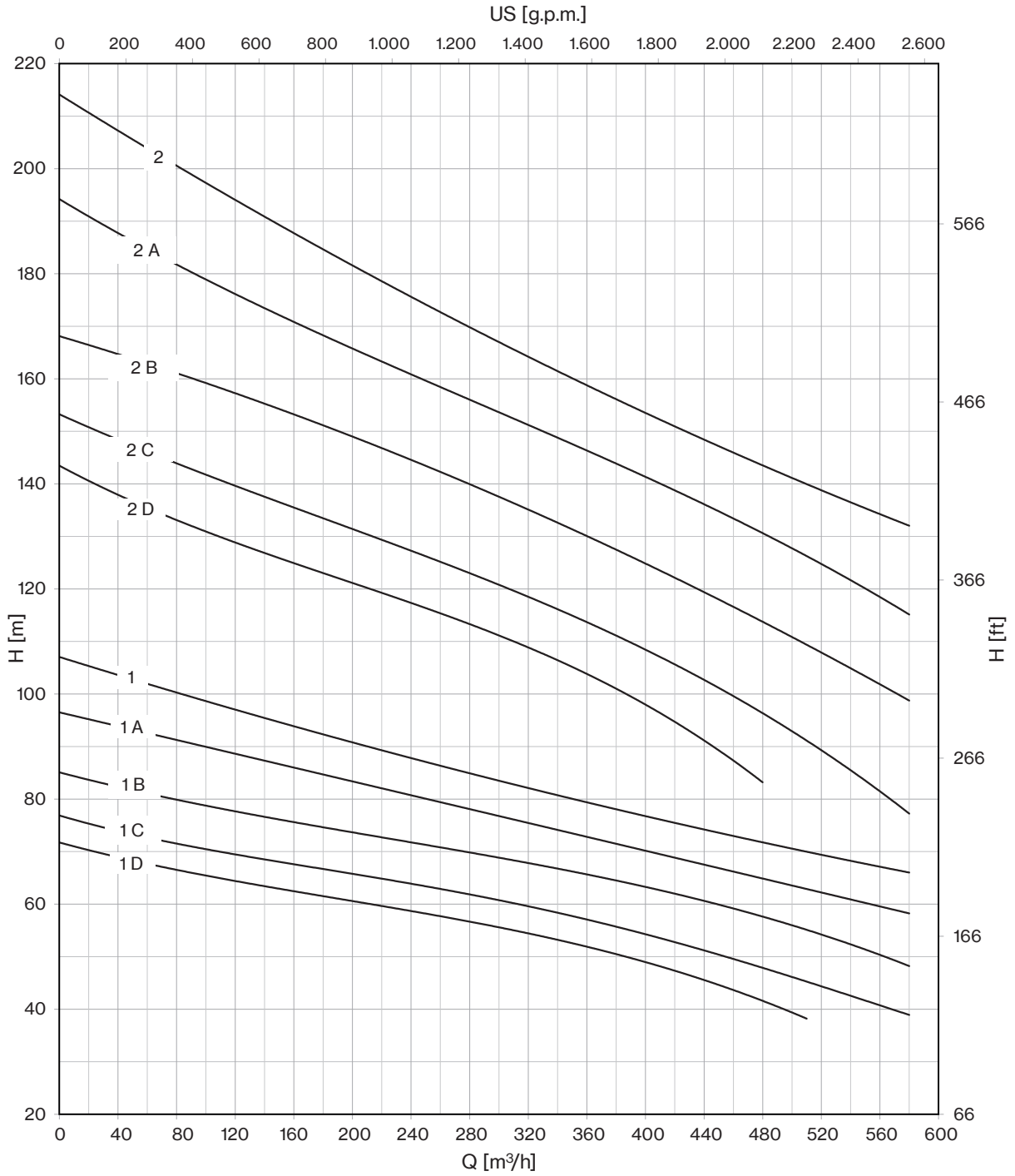


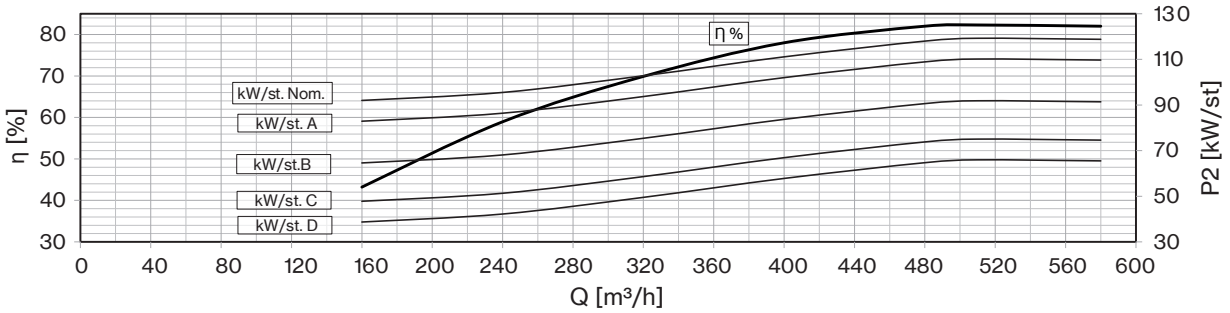




*Drinking water compatibility according DM 174*
*Models with less than 3 stages reduce the % eff. of 5%*
*Hydraulic performance according to ISO 9906 grade 3B*

| 50 Hz - 2900 rpm | | | | | Q | | | | | | | | |
|---|---|---|---|---|---|---|---|---|---|---|---|---|---|
| TYPE | SUITABLE MOTOR 3~ 400V | | | l/min | 0 | 1333 | 4000 | 5333 | 6667 | 9000 | 10000 | 12500 | 14333 |
| | P2 | | CURRENT | l/sec | 0 | 22,2 | 66,7 | 88,9 | 111,1 | 150,0 | 166,7 | 208,3 | 238,9 |
| | HP | kW | A | m³/h | 0 | 80 | 240 | 320 | 400 | 540 | 600 | 750 | 860 |
| **E14 B/1C** | 125 | 92 | 175,1 | H (m) | 73,5 | 72,5 | 68,0 | 63,5 | 57,8 | 44,0 | 36,5 | 14,0 | |
| **E14 B/1B** | 150 | 110 | 211,0 | | 80,4 | 79,5 | 75,0 | 71,5 | 66,0 | 53,5 | 46,7 | 26,5 | |
| **E14 B/1A** | 175 | 130 | 245,3 | | 87,0 | 84,0 | 79,0 | 77,0 | 73,8 | 66,0 | 61,5 | 45,5 | 29,0 |
| **E14 B/1** | 200 | 150 | 277,2 | | 100,8 | 97,4 | 90,4 | 86,9 | 82,9 | 74,2 | 69,0 | 53,9 | 38,4 |
| **E14 B/2C** | 250 | 185 | 342,2 | | 147,0 | 145,0 | 136,0 | 127,0 | 115,6 | 88,0 | 73,0 | 28,0 | |
| **E14 B/2B** | 300 | 220 | 430,0 | | 160,7 | 159,0 | 150,0 | 143,0 | 132,0 | 107,0 | 93,4 | 53,0 | |
| **E14 B/2A** | 400 | 300 | 551,0 | | 174,0 | 168,0 | 158,0 | 154,0 | 147,6 | 132,0 | 123,0 | 91,0 | 58,0 |
| **E14 B/2** | 400 | 300 | 551,0 | | 201,6 | 194,8 | 180,8 | 173,8 | 165,8 | 148,4 | 138,0 | 107,8 | 76,8 |

| | |
|---|---|
| **Max Eff. %** | 78,6 |
| **Max KW / St. C (240mm) =** | 91,8 |
| **Max KW / St. B (D.250mm) =** | 109,7 |
| **Max KW / St. A (259mm) =** | 129,6 |
| **Max KW / St. - (274mm) =** | 149,6 |

| **NPSH (m)** | Q=25% | Q=50% | Q=75% | Q=100% |
|---|---|---|---|---|
| | 6 | 6,4 | 8,6 | 16,3 |

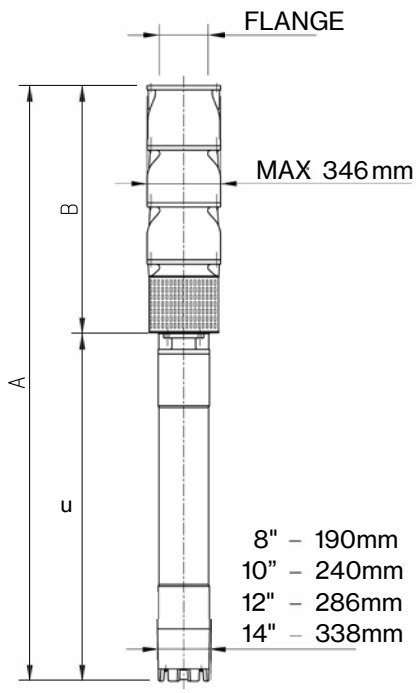


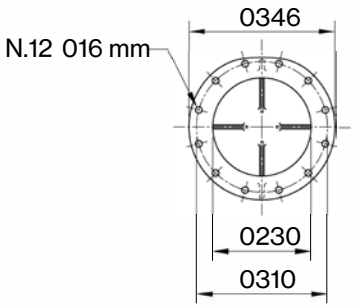


| TYPE 3~ | MOTOR BRACKET | DIMENSIONS (mm) | | | WEIGHT (kg) | |
|---|---|---|---|---|---|---|
| | | A | B | C | MOTOR | PUMP |
| **E14 B/1C-8** | 8" NEMA | 2488 | 905 | 1583 | 270 | 184 |
| **E14 B/1B-8** | | 2638 | 905 | 1733 | 300 | 184 |
| **E14 B/1A-10** | 10" | 2539 | 905 | 1634 | 385 | 184 |
| **E14 B/1-10** | | 2639 | 905 | 1734 | 415 | 184 |
| **E14 B/2C-10** | | 3159 | 1175 | 1984 | 480 | 260 |
| **E14 B/2B-12** | 12" | 3285 | 1175 | 2110 | 700 | 260 |
| **E14 B/2A** | 14" | 3455 | 1175 | 2280 | 775 | 260 |
| **E14 B/2** | | 3455 | 1175 | 2280 | 775 | 260 |

# E14 B

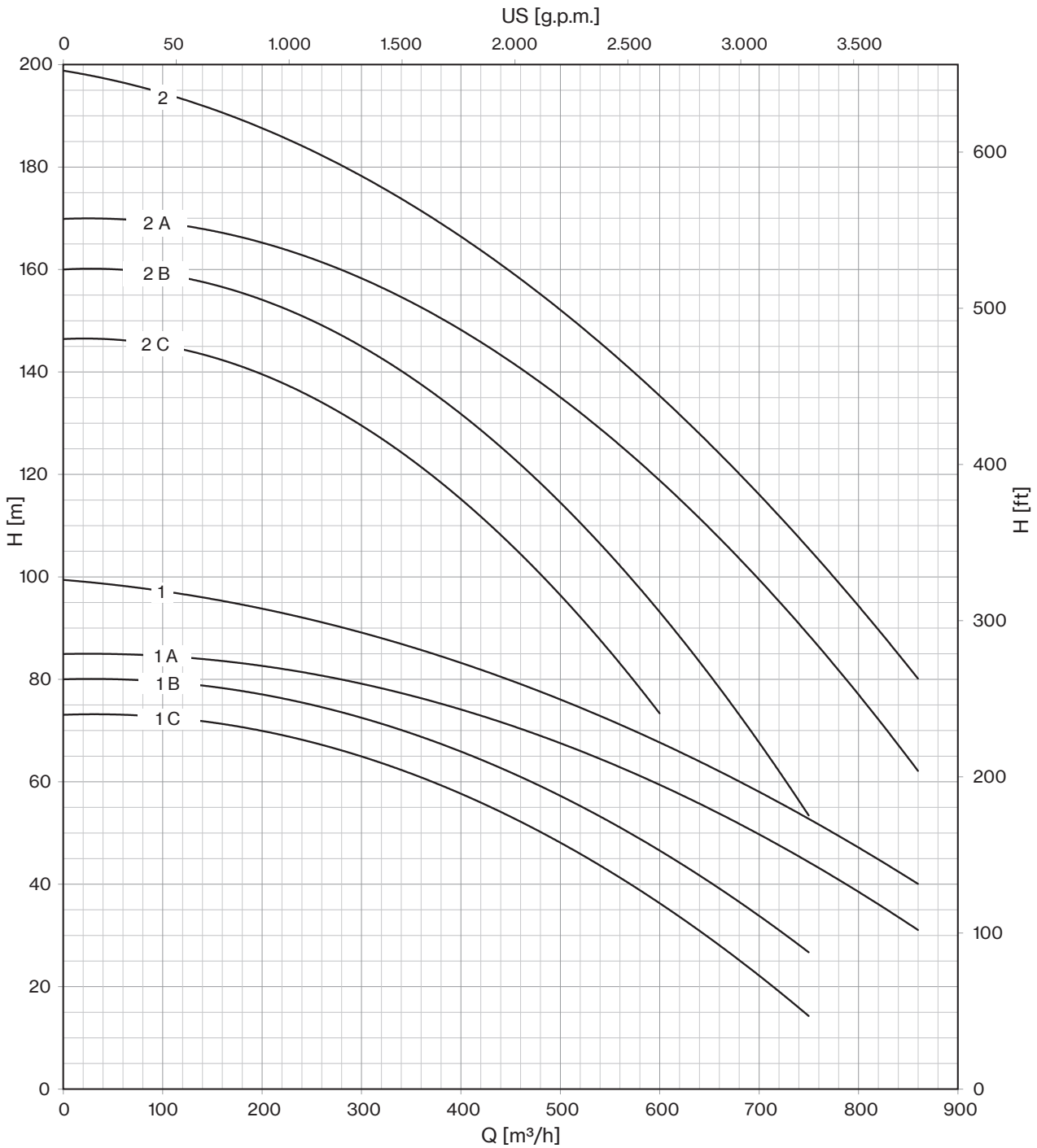


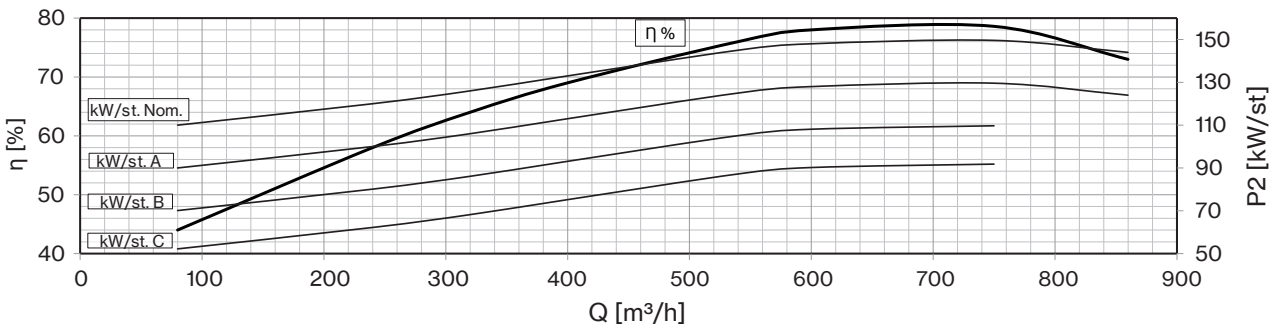




*Drinking water compatibility according DM 174*
*Models with less than 3 stages reduce the % eff. of 5%*
*Hydraulic performance according to ISO 9906 grade 3B*

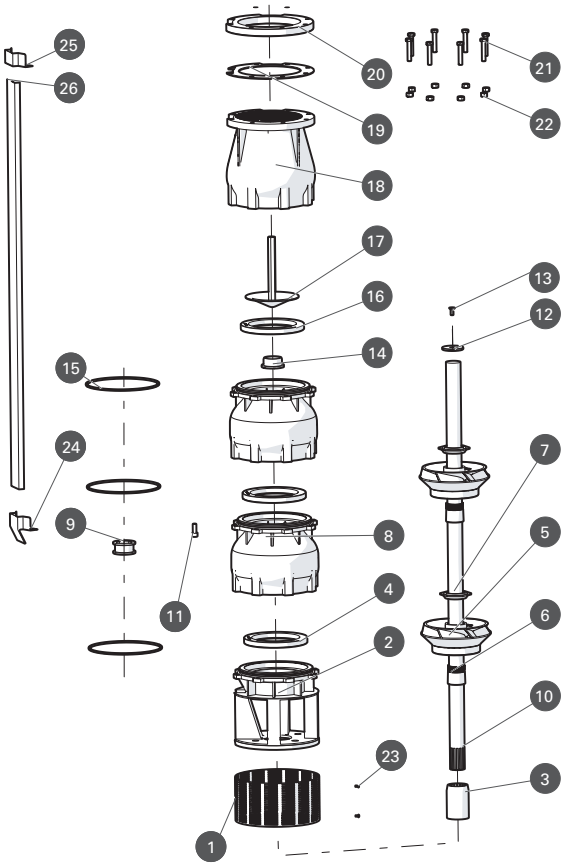


| N. CODE | DESCRIPTION | LMS EXECUTION | LMX EXECUTION | LMD EXECUTION | (*) Q.TY |
|---|---|---|---|---|---|
| 1 | **SUCTION STRAINER** | AISI 304 | AISI 316 | Duplex EN 1.4462 | - |
| 2 | **MOTOR BRACKET** | AISI 304 | AISI 316 | Duplex EN 1.4462 | - |
| 3 | **COUPLING** | AISI 304 | AISI 316 | Duplex EN 1.4462 | 1 |
| 4 | **WEAR RING** | NBR | NBR | NBR | N° of Stages |
| 5 | **IMPELLER** | AISI 304 | AISI 316 | Duplex EN 1.4462 | - |
| 6 | **CONE** | AISI 304 | AISI 316 | Duplex EN 1.4462 | N° of Stages |
| 7 | **HEXAGONAL RING** | AISI 304 | AISI 316 | Duplex EN 1.4462 | N° of Stages |
| 8 | **DIFFUSER** | AISI 304 | AISI 316 | Duplex EN 1.4462 | - |
| 9 | **BEARING BUSH** | NBR | NBR | NBR | N° of Stages |
| 10 | **PUMP SHAFT** | AISI 304 | AISI 316 | Duplex EN 1.4462 | 1 |
| 11 | **N.8 SCREW FOR DIFFUSEUR** | AISI 304 | AISI 316 | Duplex EN 1.4462 | - |
| 12 | **RING** | AISI 304 | AISI 316 | Duplex EN 1.4462 | 1 |
| 13 | **SCREW FOR DISK** | AISI 304 | AISI 316 | Duplex EN 1.4462 | 1 |
| 14 | **COUNTERTHRUST** | PTFE + 25% CARBON | PTFE + 25% CARBON | PTFE + 25% CARBON | 1 |
| 15 | **O-RING** | NBR | NBR | NBR | N° of Stages |
| 16 | **GASKET VALVE** | NBR | NBR | NBR | 1 |
| 17 | **CAP VALVE** | AISI 304 | AISI 316 | Duplex EN 1.4462 | - |
| 18 | **BODY VALVE** | AISI 304 | AISI 316 | Duplex EN 1.4462 | - |
| 19 | **SEAL COUNTERFLANGE** | NBR | NBR | NBR | 1 |
| 20 | **COUNTERFLANGE** | AISI 304 | AISI 316 | Duplex EN 1.4462 | - |
| 21 | **N.8 SCREW FOR COUNTERFLANGE** | AISI 304 | AISI 316 | Duplex EN 1.4462 | - |
| 22 | **N.8 NUT FOR COUNTERFLANGE** | AISI 304 | AISI 316 | Duplex EN 1.4462 | - |
| 23 | **N.2 SCREW FOR SUCTION STRAINER** | AISI 304 | AISI 316 | Duplex EN 1.4462 | - |
| 24 | **LOWER CLAMP** | AISI 304 | AISI 316 | Duplex EN 1.4462 | - |
| 25 | **UPPER CLAMP** | AISI 304 | AISI 316 | Duplex EN 1.4462 | - |
| 26 | **COVER CABLE** | AISI 304 | AISI 316 | Duplex EN 1.4462 | - |

** Reccomended spare parts quantity*

# E14

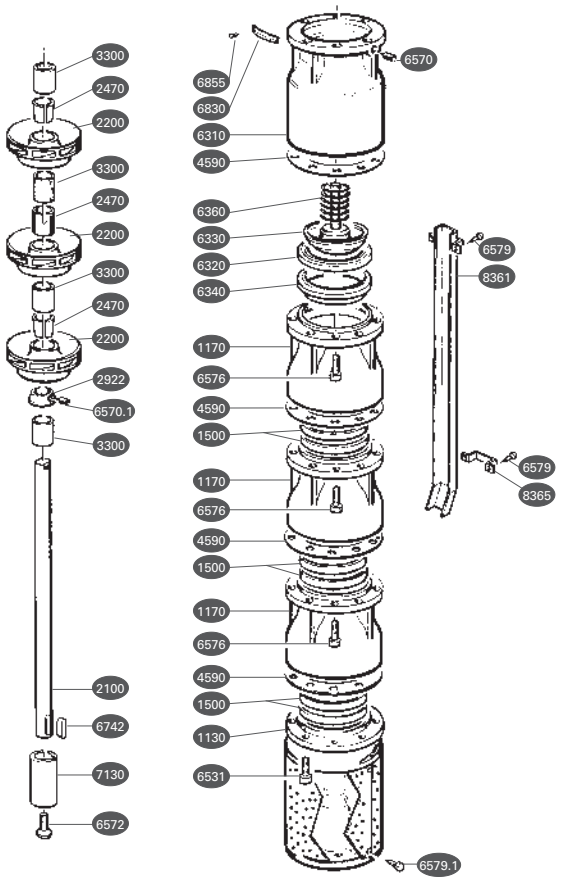


| N. CODE | DESCRIPTION | MATERIAL | (*) Q.TY |
|---|---|---|---|
| 1130 | **MOTOR BRACKET** | CAST IRON | |
| 1170 | **DIFFUSER** | CAST IRON | |
| 1500 | **WEAR RING** | RUBBER | 1 × Stage |
| 2100 | **SHAFT** | STAINLESS STEEL | |
| 2200 | **IMPELLER** | CAST IRON | 1 × Stage |
| 2470 | **BUSHING** | STEEL | 1 × Stage |
| 2922 | **SANDGUARD** | BRASS | |
| 3300 | **BEARING** | STEEL - RUBBER | 1 × Stage |
| 4590 | **GLAND** | GUARNITAL | 1 × Stage |
| 6310 | **VALVE BODY** | VALVE BODY / CAST IRON | |
| 6320 | **VALVE HOUSING** | RUBBER | |
| 6330 | **WASHER** | STAINLESS STEEL | |
| 6340 | **HOUSING RING** | CAST IRON | |
| 6360 | **SPRING** | STAINLESS STEEL | |
| 6531 | **STRAINER** | STAINLESS STEEL | |
| 6570 | **SCREW** | STAINLESS STEEL | |
| 6570.1 | **SCREW** | STAINLESS STEEL | |
| 6572 | **SCREW** | STAINLESS STEEL | |
| 6576 | **SCREW** | STAINLESS STEEL | |
| 6579 | **SCREW** | STAINLESS STEEL | |
| 6579.1 | **SCREW** | STAINLESS STEEL | |
| 6742 | **KEY** | STAINLESS STEEL | |
| 6830 | **LABEL** | STAINLESS STEEL | |
| 6855 | **PIN** | STAINLESS STEEL | |
| 7130 | **JOINT** | STAINLESS STEEL | |
| 8361 | **SHEAT** | STAINLESS STEEL | |
| 8365 | **CABLE GUARD CLAMP** | STAINLESS STEEL | |

** Reccomended spare parts quantity*

# SUBMERSIBLE WELL MOTORS

# SUBMERSIBLE WELL MOTORS

4MPE/6MPE

6R/8R/10R

PTR12/PTR14

Line of motors for submersible electric pumps, available with different construction technologies and available in sizes 4", 6", 8", 10", 12" and 14".

# 4MPE/6MPE

## Submersible Well Motors

4” and 6” rewindable oil filled submersible motors characterized by high torque, strong mechanical structure, high reliability. Suitable for vertical and horizontal operations.

| Construction features | |
|---|---|
| **Upper support** | nickel plated cast iron |
| **External jacket, shaft and cup** | stainless steel AISI 304 |
| **Mechanical seal** | ceramic-graphite |
| **Ball bearings** | axial and radial oil lubricated |
| **Number of startups/hr** | max 30 |
| **Coolant** | non-toxic dielectric lubricant |
| **Cable** | 1,75 to 4 m according to motor size (3 wires + ground) |
| **Shaft extension and coupling** | NEMA standard |
| **Voltage** | 1~ 220/230V - 50Hz<br>3~ 380/415V - 50Hz |
| **Insulation class** | F |
| **Protection degree** | IPX8 |
| **Max liquid temperature** | 35° C |
| **Max depth immersion** | 150 m |

4MPE

6MPE

**4 MPE T 30 H**

- thrust load: standard / **H** high
- nominal power HP : ×10 (4") ×100 (6")
- 1~ / **T** 3~
- motor type
- size (inches)

# 4MPE/6MPE

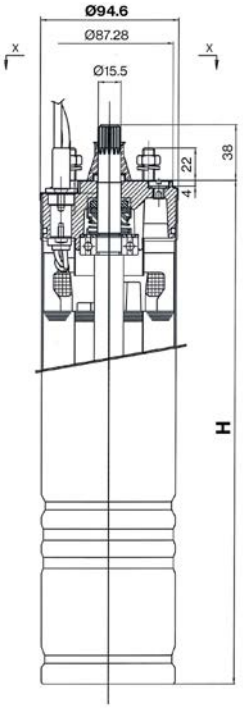


4 "

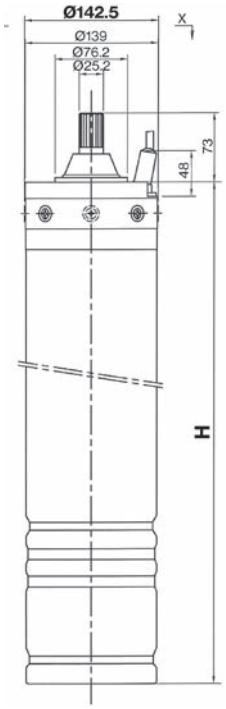


6 "

| TYPE 1~ 230V | HP | kW | Axial load | $I_N$ | $I_{START}$ | C | Efficiency | Cos Φ | $T_S / T_N$ | H | Kg | CABLE Lenght | CABLE Size |
|---|---|---|---|---|---|---|---|---|---|---|---|---|---|
| | | | N | A | | µF | % | | | mm | | m | mm² |
| **4MPE 5** | 0,5 | 0,37 | 1500 | 3,4/3,6 | 10,8 | 20 | 53 | 0,94 | 1 | 325 | 7 | 1,75 | 1,5 |
| **4MPE 7** | 0,75 | 0,55 | | 4,2/4,5 | 13,9 | 25 | 60 | 0,92 | 0,87 | 325 | 7,6 | | |
| **4MPE10** | 1 | 0,75 | | 5,6/6 | 18,5 | 35 | 62 | 0,92 | 0,7 | 350 | 8,7 | | |
| **4MPE15** | 1,5 | 1,1 | | 7,8/8,2 | 23 | 40 | 66 | 0,92 | 0,5 | 385 | 10,3 | | |
| **4MPE20** | 2 | 1,5 | | 10,8/11 | 38,7 | 50 | 68 | 0,88 | 0,55 | 420 | 12 | | |
| **4MPE30** | 3 | 2,2 | | 14,6/14,8 | 43,5 | 70 | 69 | 0,94 | 0,48 | 470 | 14,2 | 2,5 | |
| **4MPE30H** | 3 | 2,2 | 7500 | 14,6/14,8 | 43,5 | 70 | 69 | 0,94 | 0,48 | 520 | 15,5 | | |

| TYPE 3~ 400V | HP | kW | Axial load | $I_N$ | $I_{START}$ | Efficiency | Cos Φ | $T_S / T_N$ | H | Kg | CABLE Lenght | CABLE Size |
|---|---|---|---|---|---|---|---|---|---|---|---|---|
| | | | N | A | | % | | | mm | | m | mm² |
| **4MPET 5** | 0,5 | 0,37 | 1500 | 1,3/1,6 | 6,2 | 60 | 0,72 | 2,9 | 325 | 6,5 | 1,75 | 1,5 |
| **4MPET 7** | 0,75 | 0,55 | | 1,9/2 | 8,5 | 62 | 0,71 | 3,1 | 325 | 7 | | |
| **4MPET 10** | 1 | 0,75 | | 2,4/2,6 | 10,9 | 66 | 0,71 | 3,1 | 325 | 7,6 | | |
| **4MPET 15** | 1,5 | 1,1 | | 3,2/3,4 | 14 | 73 | 0,7 | 3,2 | 350 | 8,7 | | |
| **4MPET 20** | 2 | 1,5 | | 4,4/4,6 | 17 | 73 | 0,7 | 3,1 | 385 | 10,4 | | |
| **4MPET 30** | 3 | 2,2 | | 5,8/6,2 | 25 | 75 | 0,78 | 3,1 | 420 | 12 | 2,5 | |
| **4MPET 30H** | 3 | 2,2 | 7500 | 5,8/6,2 | 25 | 75 | 0,78 | 3,1 | 470 | 14,2 | | |
| **4MPET 40** | 4 | 3 | 2500 | 7,6/7,8 | 35 | 74 | 0,81 | 2,8 | 418 | 12,8 | | |
| **4MPET 42** | 4 | 3 | 5000 | 7,6/7,8 | 34 | 74 | 0,81 | 2,8 | 418 | 13,1 | | |
| **4MPET 42H** | 4 | 3 | 7500 | 7,9/8 | 34 | 77 | 0,75 | 3 | 550 | 19 | | |
| **4MPET 55** | 5,5 | 4 | 2500 | 9,8/9,9 | 49 | 76 | 0,82 | 3 | 468 | 15,3 | | |
| **4MPET 57** | 5,5 | 4 | 5000 | 9,8/9,9 | 49 | 76 | 0,82 | 3 | 468 | 15,6 | | |
| **4MPET 57H** | 5,5 | 4 | 7500 | 10/10,2 | 51 | 76 | 0,79 | 3,2 | 580 | 20,5 | | |
| **4MPET 75** | 7,5 | 5,5 | 2500 | 13,5/13,8 | 57 | 78 | 0,85 | 3 | 538 | 18,6 | 3 | |
| **4MPET 77** | 7,5 | 5,5 | 5000 | 13,5/13,8 | 57 | 78 | 0,85 | 3 | 538 | 18,9 | | |
| **4MPET 77H** | 7,5 | 5,5 | 7500 | 14,5/14,7 | 58 | 76 | 0,72 | 3,1 | 650 | 22,4 | 4 | 2 |
| **4MPET 100H** | 10 | 7,5 | | 19/19,5 | 77 | 79 | 0,8 | 3,2 | 810 | 27 | | |

| TYPE 3~ 400V | HP | kW | Axial load | $I_N$ | $I_{START}$ | Efficiency | Cos Φ | $T_S$ / $T_N$ | H | Kg | CABLE | |
|---|---|---|---|---|---|---|---|---|---|---|---|---|
| | | | | | | | | | | | Lenght | Size |
| | | | N | A | | % | | | mm | | m | mm² |
| **6MPET 55** | 5,5 | 4 | 10000 | 8,8 | 45 | 76 | 0,82 | 2,4 | 540 | 32 | 2,8 | 4 |
| **6MPET 75** | 7,5 | 5,5 | | 12,5 | 64 | 78 | 0,82 | 3 | 570 | 40 | | |
| **6MPET 100** | 10 | 7,5 | | 16,9 | 78 | 77 | 0,82 | 2,5 | 600 | 42 | | |
| **6MPET 125** | 12,5 | 9,2 | | 21,5 | 95 | 80 | 0,81 | 2,4 | 600 | 45 | | |
| **6MPET 150** | 15 | 11 | | 23,7 | 121 | 83 | 0,83 | 2,4 | 700 | 48 | | |
| **6MPET 175** | 17,5 | 12,8 | | 27,8 | 145 | 82 | 0,84 | 2,4 | 700 | 50 | | |
| **6MPET 200** | 20 | 15 | | 30,4 | 160 | 82 | 0,85 | 2,5 | 760 | 54 | | |
| **6MPET 250** | 25 | 18,5 | | 38,3 | 225 | 82 | 0,85 | 2,1 | 830 | 65 | | 8 |
| **6MPET 300** | 30 | 22 | | 44 | 250 | 83 | 0,86 | 2 | 890 | 70 | | |
| **6MPET 400** | 40 | 30 | 20000 | 62 | 330 | 86 | 0,86 | 2 | 1030 | 90 | | |
| **6MPET 500** | 50 | 37 | | 72 | 400 | 86 | 0,87 | 2 | 1170 | 101 | | |

| TYPE 1~ | HP | kW | PROTECTION | CONTROL PANEL |
|---|---|---|---|---|
| **4MPE 5** | 0,5 | 0,37 | PML 5/20-4 | EQSM + 20μF |
| **4MPE 7** | 0,75 | 0,55 | PML 7/25-6 | EQSM + 25μF |
| **4MPE 10** | 1 | 0,75 | PML 10/35-7 | EQSM + 35μF |
| **4MPE 15** | 1,5 | 1 | PML 15/40-10 | EQSM + 40μF |
| **4MPE 20** | 2 | 1,5 | PML 20/50-13 | EQSM + 50μF |
| **4MPE 30** | 3 | 2,2 | PML 30/80-18 | EQSM + 80μF |

| TYPE 3~ | HP | kW | PROTECTION | CONTROL PANEL |
|---|---|---|---|---|
| **4MPET 5** | 0,5 | 0,37 | PT 7/1,3-2,1 | EQSMT 10 |
| **4MPET 7** | 0,75 | 0,55 | PT 7/1,3-2,1 | EQSMT 10 |
| **4MPET 10** | 1 | 0,75 | PT 10/1,9-3 | EQSMT 10 |
| **4MPET 15** | 1,5 | 1 | PT 15-20/2,9-4,5 | EQSMT 10 |
| **4MPET 20** | 2 | 1,5 | PT 20/30-40/4,3-6,8 | EQSMT 10 |
| **4MPET 30** | 3 | 2,2 | PT 20/30-40/4,3-6,8 | EQSMT 10 |
| **4MPET 40** | 4 | 3 | PT 40-50/5,7-9,1 | EQSMT 10 |
| **4MPET 55** | 5,5 | 4 | PT 55-75/8,6-13,5 | EQSMT 10 |
| **4MPET 75** | 7,5 | 5,5 | PT 100/12,5-16,5 | EQSMT 10 |
| **4MPET 100** | 10 | 7,5 | PT 125-150/16-21 | EQSMT 15 |

| TYPE | HP | kW | PROTECTION | CONTROL PANEL | CONTROL PANEL star-delta starting 400/690 V |
|---|---|---|---|---|---|
| **6MPET 55** | 5,4 | 4 | PT 55-75/8.6-13.5 | EQSMT 10 | QST 5 |
| **6MPET 75** | 7,5 | 5,5 | PT 100/12.5-16.5 | EQSMT 10 | QST 7 |
| **6MPET 100** | 10 | 7,5 | PT 125-150/16-21 | EQSMT 10 | QST 10 |
| **6MPET 125** | 12,5 | 9,2 | PT 200/22-29 | EQSMT 15 | QST 15 |
| **6MPET 150** | 15 | 11 | PT 200/22-29 | EQSMT 15 | QST 15 |
| **6MPET 175** | 17,5 | 13 | - | EQSMT 20 | QST 20 |
| **6MPET 200** | 20 | 15 | - | EQSMT 20 | QST 20 |
| **6MPET 250** | 25 | 18,5 | - | - | QST 30 |
| **6MPET 300** | 30 | 22 | - | - | QST 30 |
| **6MPET 400** | 40 | 30 | - | - | QST 40 |
| **6MPET 500** | 50 | 37 | - | - | QST 50 |

# 6R/8R/10R

## Submersible Well Motors

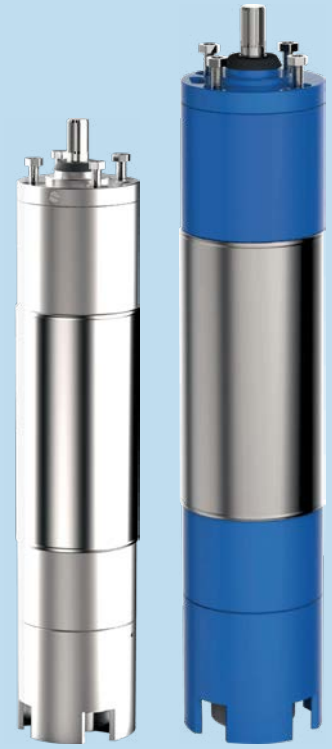

6”, 8”, 10” rewindable submersible water-filled motors with NEMA coupling flange and shaftend. Power from 4 kW up to 185 kW. Avaible in PPC (standard), LPE and PE2+PA insulation class. The motor can be supplied in stainless steel AISI 304, AISI 316 or Duplex EN 1.4462.

| Construction features | |
|---|---|
| **Upper and bottom support** | G25 (6R / 8R / 10R)<br>stainless steel AISI 304 (6RS / 8RS / 10RS)<br>stainless steel AISI 316 (6RX / 8RX / 10RX)<br>Duplex EN 1.4462 (6RD / 8RD / 10RD) |
| **Stator sleeve** | stainless steel AISI 304 - (R)<br>stainless steel AISI 304 - (RS)<br>stainless steel AISI 316 - (RX)<br>Duplex EN 1.4462 - (RD) |
| **Shaft end** | stainless steel AISI 431 - (R)<br>stainless steel AISI 431 - (RS)<br>stainless steel AISI 316 - (RX)<br>Duplex EN 1.4462 - (RD) |
| **Seal type** | lip seal (standard);<br>mechanical seal (on request) |
| **Bearings** | radial and axial, water lubricated |
| **Thrust bearing** | Michell |
| **Voltage** | 3~ 400V ± 10% - 50Hz<br>3~ 400/690V ± 10% - 50Hz |
| **Min. cooling flow** | 0,5 m/s |
| **Insulation class** | Y (max 30° C) for PPC<br>F (max 50° C) for PE2+PA or LPE |
| **Insulation** | PPC (standard)<br>PE2 + PA or LPE (on request) |
| **Protection degree** | IPX8 |
| **Max depth immersion** | 350m |
| **Available on demand** | - PT 100<br>- Star/Delta starting<br>- Cooling Sleeve<br>- Cer./Carb./NBR Seal<br>- SIC/SIC/NBR Seal |

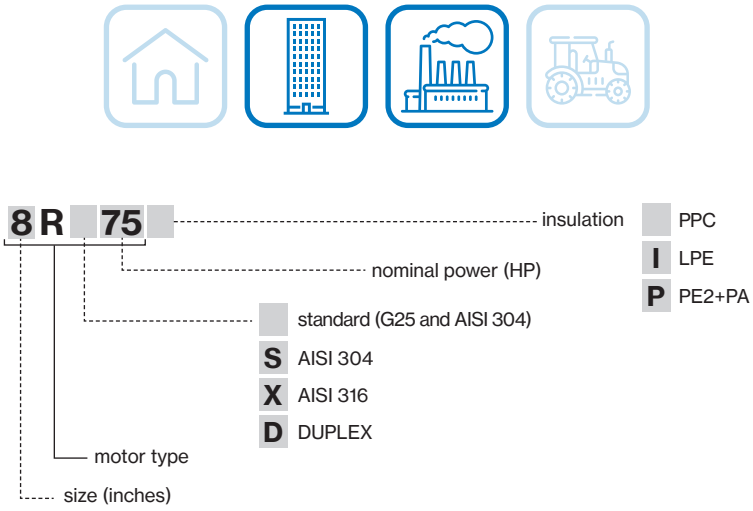

| TYPE | HP | kW | V | $I_N$ | rpm | Efficency % | | | Cos Φ | | | Starting | | | | Axial load | Start/ hour (max) |
|---|---|---|---|---|---|---|---|---|---|---|---|---|---|---|---|---|---|
| | | | | | | | | | | | | Direct | | Star-delta | Statoric | | |
| | | | | A | | 50% | 75% | 100% | 50% | 75% | 100% | Cs/Cn | Is / In | Is / In | Is / In | N | |
| **6R7** | 7,5 | 5,5 | 380<br>400<br>415 | 12,4<br>12,3<br>12,3 | 2846<br>2859<br>2880 | 77,0<br>76,0<br>75,0 | 82,0<br>81,0<br>80,0 | 81,0<br>80,0<br>79,0 | 0,67<br>0,65<br>0,63 | 0,78<br>0,76<br>0,74 | 0,83<br>0,81<br>0,79 | 1,60 | 5,60 | 1,90 | 3,40 | 16000 | 15 |
| **6R10** | 10 | 7,5 | 380<br>400<br>415 | 16,6<br>16,3<br>16,3 | 2843<br>2861<br>2882 | 78,0<br>77,0<br>76,0 | 82,5<br>81,5<br>80,5 | 82,0<br>81,0<br>80,0 | 0,68<br>0,66<br>0,64 | 0,78<br>0,76<br>0,74 | 0,84<br>0,82<br>0,80 | 1,80 | 5,70 | 1,90 | 3,40 | | |
| **6R12** | 12,5 | 9,2 | 380<br>400<br>415 | 20,2<br>19,9<br>19,9 | 2846<br>2864<br>2886 | 79,0<br>78,0<br>77,0 | 83,0<br>82,0<br>81,0 | 82,0<br>81,0<br>80,0 | 0,68<br>0,66<br>0,64 | 0,79<br>0,77<br>0,75 | 0,85<br>0,83<br>0,81 | 1,80 | 5,70 | 1,90 | 3,40 | | |
| **6R15** | 15 | 11 | 380<br>400<br>415 | 23,7<br>23,4<br>23,4 | 2849<br>2867<br>2882 | 80,0<br>79,0<br>78,0 | 84,5<br>83,5<br>82,5 | 83,5<br>82,5<br>81,5 | 0,69<br>0,67<br>0,65 | 0,79<br>0,77<br>0,75 | 0,85<br>0,83<br>0,81 | 1,90 | 5,90 | 2,00 | 3,50 | | |
| **6R17** | 17,5 | 13 | 380<br>400<br>415 | 27,7<br>27,3<br>27,3 | 2851<br>2870<br>2887 | 81,0<br>80,0<br>79,0 | 84,5<br>83,5<br>82,5 | 84,0<br>83,0<br>82,0 | 0,69<br>0,67<br>0,65 | 0,79<br>0,77<br>0,75 | 0,85<br>0,83<br>0,81 | 1,80 | 6,00 | 2,00 | 3,60 | | |
| **6R20** | 20 | 15 | 380<br>400<br>415 | 32<br>31,5<br>31,5 | 2852<br>2871<br>2883 | 82,0<br>81,0<br>80,0 | 85,0<br>84,0<br>83,0 | 84,0<br>83,0<br>82,0 | 0,69<br>0,67<br>0,65 | 0,79<br>0,77<br>0,75 | 0,85<br>0,83<br>0,81 | 1,70 | 5,90 | 2,00 | 3,50 | | |
| **6R25** | 25 | 18,5 | 380<br>400<br>415 | 38,9<br>38,3<br>38,6 | 2854<br>2873<br>2889 | 82,5<br>81,5<br>80,0 | 85,5<br>84,5<br>83,0 | 85,0<br>84,0<br>82,5 | 0,69<br>0,67<br>0,65 | 0,79<br>0,77<br>0,75 | 0,85<br>0,83<br>0,81 | 1,70 | 5,60 | 1,90 | 3,40 | 25000 | |
| **6R30** | 30 | 22 | 380<br>400<br>415 | 45,8<br>45,1<br>45,3 | 2857<br>2877<br>2890 | 82,5<br>81,5<br>80,0 | 85,5<br>84,5<br>83,0 | 85,0<br>84,0<br>82,5 | 0,70<br>0,68<br>0,66 | 0,80<br>0,78<br>0,76 | 0,86<br>0,84<br>0,82 | 1,70 | 5,90 | 2,00 | 3,50 | | |
| **6R35** | 35 | 26 | 380<br>400<br>415 | 53,8<br>52,9<br>53,2 | 2867<br>2878<br>2891 | 82,5<br>81,5<br>80,0 | 86,0<br>85,0<br>83,5 | 85,5<br>84,5<br>83,0 | 0,71<br>0,69<br>0,67 | 0,81<br>0,79<br>0,77 | 0,86<br>0,84<br>0,82 | 1,70 | 5,70 | 1,90 | 3,40 | | |
| **6R40** | 40 | 30 | 380<br>400<br>415 | 62,1<br>61,1<br>61,4 | 2861<br>2880<br>2892 | 82,5<br>81,5<br>80,0 | 86,0<br>85,0<br>83,5 | 85,5<br>84,5<br>83,0 | 0,72<br>0,70<br>0,68 | 0,81<br>0,79<br>0,77 | 0,86<br>0,84<br>0,82 | 1,70 | 5,60 | 1,90 | 3,40 | | |
| **6R50** | 50 | 37 | 380<br>400<br>415 | 77<br>75,8<br>76,2 | 2863<br>2882<br>2891 | 83,0<br>82,0<br>80,5 | 86,5<br>85,5<br>84,0 | 85,0<br>84,0<br>82,5 | 0,72<br>0,70<br>0,68 | 0,81<br>0,79<br>0,77 | 0,86<br>0,84<br>0,82 | 1,60 | 5,60 | 1,90 | 3,40 | | |

Service factor: 50Hz=1 - Direction of rotation (view from shaft projection side: anti-clockwise
Cs = Starting torque - Cn = Nominal couple - Is = Starting current - In = Nominal current

| TYPE | HP | kW | Cables | | Cable lenght | Max water temperature by winding type | |
|---|---|---|---|---|---|---|---|
| | | | Starting | | | | |
| | | | Direct | Star Delta | m | PPC | PE2-PA / LPE |
| | | | 400 V ± 5% | 400 / 690 V | | | |
| **6R7** | 7,5 | 5,5 | 4G × 4 mm² | 2×(4G × 4 mm²) | 3 | 30 °C | 50 °C |
| **6R10** | 10 | 7,5 | 4G × 4 mm² | 2×(4G × 4 mm²) | | | |
| **6R12** | 12,5 | 9,2 | 4G × 4 mm² | 2×(4G × 4 mm²) | | | |
| **6R15** | 15 | 11 | 4G × 4 mm² | 2×(4G × 4 mm²) | | | |
| **6R17** | 17,5 | 13 | 4G × 6 mm² | 2×(4G × 4 mm²) | | | |
| **6R20** | 20 | 15 | 4G × 6 mm² | 2×(4G × 4 mm²) | | | |
| **6R25** | 25 | 18,5 | 4G × 6 mm² | 2×(4G × 4 mm²) | | | |
| **6R30** | 30 | 22 | 4G × 6 mm² | 2×(4G × 4 mm²) | | | |
| **6R35** | 35 | 26 | 4G × 10 mm² | 2×(4G × 6 mm²) | | | |
| **6R40** | 40 | 30 | 4G × 10 mm² | 2×(4G × 6 mm²) | | | |
| **6R50** | 50 | 37 | 4G × 10 mm² | 2×(4G × 10 mm²) | | | |

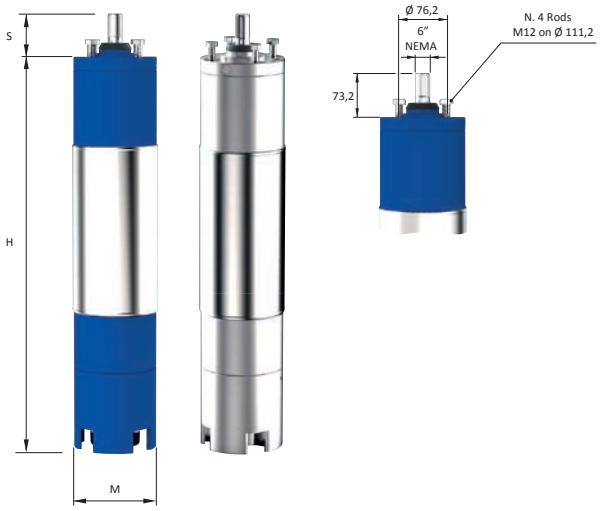


| TYPE | DIMENSIONS | | | Kg |
|---|---|---|---|---|
| | H | S | M | |
| | mm | | | |
| **6R7** | 671 | 73,2 | 145 | 45 |
| **6R10** | 701 | | | 55 |
| **6R12** | 751 | | | 60 |
| **6R15** | 811 | | | 65 |
| **6R17** | 841 | | | 70 |
| **6R20** | 931 | | | 75 |
| **6R25** | 991 | | | 83 |
| **6R30** | 1071 | | | 92 |
| **6R35** | 1181 | | | 100 |
| **6R40** | 1251 | | | 108 |
| **6R50** | 1341 | | | 118 |

# 8R-8RS-8RX-8RD

| TYPE | HP | kW | V | $I_N$ | rpm | Efficency % | | | Cos Φ | | | Starting | | | | Axial load | Start/ hour (max) |
|---|---|---|---|---|---|---|---|---|---|---|---|---|---|---|---|---|---|
| | | | | | | | | | | | | Direct | | Star-delta | Statoric | | |
| | | | | A | | 50% | 75% | 100% | 50% | 75% | 100% | Cs/Cn | Is / In | Is / In | Is / In | N | |
| **8R40** | 40 | 30 | 380 | 64,4 | 2859 | 79,8 | 85,2 | 84,3 | 0,77 | 0,81 | 0,84 | 2,05 | 6,40 | 2,10 | 3,80 | 45000 | 10 |
| | | | 400 | 61,7 | 2875 | 80,1 | 85,0 | 84,7 | 0,76 | 0,80 | 0,83 | | | | | | |
| | | | 415 | 60 | 2892 | 79,3 | 84,5 | 85,0 | 0,75 | 0,79 | 0,82 | | | | | | |
| **8R50** | 50 | 37 | 380 | 75,4 | 2865 | 80,3 | 85,7 | 84,8 | 0,79 | 0,83 | 0,88 | 1,95 | 5,70 | 2,00 | 3,70 | | |
| | | | 400 | 73 | 2888 | 80,6 | 85,5 | 85,2 | 0,77 | 0,81 | 0,86 | | | | | | |
| | | | 415 | 71,8 | 2904 | 79,8 | 85,0 | 85,5 | 0,75 | 0,79 | 0,84 | | | | | | |
| **8R60** | 60 | 45 | 380 | 90,2 | 2882 | 80,8 | 86,2 | 85,3 | 0,76 | 0,86 | 0,87 | 1,95 | 5,80 | 2,00 | 3,70 | | |
| | | | 400 | 86,3 | 2893 | 81,1 | 86,0 | 85,7 | 0,74 | 0,81 | 0,86 | | | | | | |
| | | | 415 | 84,8 | 2905 | 80,3 | 85,5 | 86,0 | 0,72 | 0,79 | 0,84 | | | | | | |
| **8R75** | 75 | 55 | 380 | 110,2 | 2880 | 81,3 | 86,7 | 85,8 | 0,76 | 0,85 | 0,89 | 1,85 | 5,80 | 2,00 | 3,60 | | |
| | | | 400 | 106,2 | 2889 | 81,6 | 86,5 | 86,2 | 0,74 | 0,81 | 0,87 | | | | | | |
| | | | 415 | 105,4 | 2901 | 80,8 | 86,0 | 86,5 | 0,72 | 0,80 | 0,84 | | | | | | |
| **8R90** | 90 | 66 | 380 | 130,7 | 2881 | 82,4 | 87,5 | 86,8 | 0,76 | 0,86 | 0,89 | 1,85 | 5,80 | 2,00 | 3,50 | | |
| | | | 400 | 126 | 2892 | 82,6 | 87,4 | 87,2 | 0,74 | 0,82 | 0,87 | | | | | | |
| | | | 415 | 125,1 | 2905 | 81,9 | 86,9 | 87,5 | 0,72 | 0,79 | 0,84 | | | | | | |
| **8R100** | 100 | 75 | 380 | 148,5 | 2882 | 82,3 | 87,7 | 86,8 | 0,75 | 0,85 | 0,89 | 1,80 | 5,80 | 2,00 | 3,50 | | |
| | | | 400 | 143,2 | 2893 | 82,6 | 87,5 | 87,2 | 0,73 | 0,81 | 0,87 | | | | | | |
| | | | 415 | 142,1 | 2905 | 81,8 | 87,0 | 87,5 | 0,71 | 0,77 | 0,84 | | | | | | |
| **8R125** | 125 | 92 | 380 | 183,5 | 2880 | 83,0 | 86,0 | 85,7 | 0,75 | 0,84 | 0,89 | 1,80 | 5,70 | 1,90 | 3,50 | | |
| | | | 400 | 175,1 | 2891 | 83,5 | 86,5 | 86,3 | 0,74 | 0,83 | 0,88 | | | | | | |
| | | | 415 | 172,7 | 2903 | 83,0 | 86,0 | 86,3 | 0,72 | 0,81 | 0,86 | | | | | | |
| **8R150** | 150 | 110 | 380 | 218,6 | 2885 | 85,5 | 86,5 | 86,0 | 0,74 | 0,83 | 0,89 | 1,80 | 5,70 | 1,90 | 3,50 | | |
| | | | 400 | 211 | 2898 | 86,1 | 87,0 | 86,6 | 0,73 | 0,82 | 0,87 | | | | | | |
| | | | 415 | 212,1 | 2908 | 85,5 | 86,5 | 86,0 | 0,72 | 0,81 | 0,84 | | | | | | |

Service factor: 50Hz=1 - Direction of rotation (view from shaft projection side: anti-clockwise
Cs = Starting torque - Cn = Nominal couple - Is = Starting current - In = Nominal current

| TYPE | HP | kW | Cables | | Cable lenght | Max water temperature by winding type | |
|---|---|---|---|---|---|---|---|
| | | | Starting | | | | |
| | | | Direct | Star Delta | | | |
| | | | 400 V ± 5% | 400 / 690 V | m | PPC | PE2-PA / LPE |
| **8R40** | 40 | 30 | 3×1×10 mm² | 6×1×10 mm² | 3 | 30 °C | 50 °C |
| **8R50** | 50 | 37 | 3×1×10 mm² | 6×1×10 mm² | | | |
| **8R60** | 60 | 45 | 3×1×16 mm² | 6×1×10 mm² | | | |
| **8R75** | 75 | 55 | 3×1×16 mm² | 6×1×10 mm² | | | |
| **8R90** | 90 | 66 | 3×1×25 mm² | 6×1×16 mm² | | | |
| **8R100** | 100 | 75 | 3×1×25 mm² | 6×1×16 mm² | | | |
| **8R125** | 125 | 92 | 3×1×25 mm² | 6×1×16 mm² | | | |
| **8R150** | 150 | 110 | 3×1×35 mm² | 6×1×25 mm² | | | |

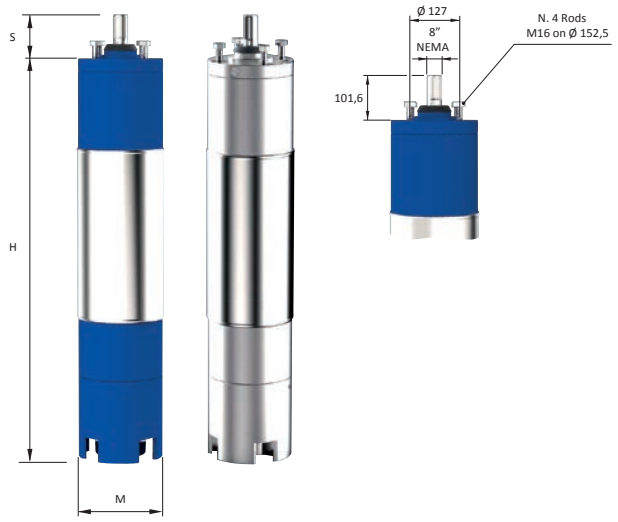


| TYPE | DIMENSIONS | | | Kg |
|---|---|---|---|---|
| | H | S | M | |
| | mm | | | |
| **8R40** | 993 | 101,6 | 194 | 150 |
| **8R50** | 1043 | | | 160 |
| **8R60** | 1123 | | | 178 |
| **8R75** | 1233 | | | 200 |
| **8R90** | 1302 | | | 214 |
| **8R100** | 1383 | | | 230 |
| **8R125** | 1583 | | | 270 |
| **8R150** | 1733 | | | 300 |

| TYPE | HP | kW | V | $I_N$ | rpm | Efficency % | | | Cos Φ | | | Starting | | | | Axial load | Start/ hour (max) |
|---|---|---|---|---|---|---|---|---|---|---|---|---|---|---|---|---|---|
| | | | | | | | | | | | | Direct | | Star-delta | Statoric | | |
| | | | | A | | 50% | 75% | 100% | 50% | 75% | 100% | Cs/Cn | Is / In | Is / In | Is / In | N | |
| | | | 380 | 154,3 | 2884 | 86,9 | 87,0 | 88,0 | 0,73 | 0,80 | 0,84 | | | | | | |
| **10R100** | 100 | 75 | 400 | 142,7 | 2896 | 85,9 | 88,0 | 88,3 | 0,72 | 0,84 | 0,86 | 1,80 | 6,40 | 1,90 | 3,40 | | |
| | | | 415 | 143,9 | 2909 | 86,4 | 88,3 | 88,5 | 0,64 | 0,77 | 0,82 | | | | | | |
| | | | 380 | 188,7 | 2890 | 87,2 | 87,3 | 88,3 | 0,74 | 0,83 | 0,84 | | | | | | |
| **10R125** | 125 | 92 | 400 | 174,5 | 2904 | 86,2 | 88,3 | 88,6 | 0,71 | 0,83 | 0,86 | 1,60 | 6,30 | 1,80 | 3,40 | | |
| | | | 415 | 176 | 2914 | 86,7 | 88,6 | 88,8 | 0,63 | 0,75 | 0,82 | | | | | | |
| | | | 380 | 222,2 | 2930 | 87,9 | 88,0 | 89,0 | 0,71 | 0,81 | 0,85 | | | | | | |
| **10R150** | 150 | 110 | 400 | 207 | 2937 | 86,9 | 89,0 | 89,3 | 0,73 | 0,84 | 0,86 | 1,55 | 6,70 | 1,80 | 3,30 | | |
| | | | 415 | 211,3 | 2943 | 87,4 | 89,3 | 89,5 | 0,63 | 0,77 | 0,81 | | | | | | |
| | | | 380 | 265,6 | 2895 | 87,5 | 88,2 | 89,0 | 0,73 | 0,81 | 0,83 | | | | | | |
| **10R175** | 175 | 130 | 400 | 245,3 | 2915 | 86,5 | 89,3 | 89,4 | 0,71 | 0,83 | 0,85 | 1,85 | 5,80 | 2,00 | 3,60 | 60000 | 10 |
| | | | 415 | 244,6 | 2928 | 87,1 | 89,5 | 89,6 | 0,62 | 0,75 | 0,82 | | | | | | |
| | | | 380 | 299,1 | 2898 | 87,1 | 88,2 | 89,0 | 0,72 | 0,82 | 0,84 | | | | | | |
| **10R200** | 200 | 150 | 400 | 277,2 | 2917 | 86,1 | 88,5 | 89,1 | 0,71 | 0,81 | 0,86 | 1,55 | 6,50 | 1,80 | 3,30 | | |
| | | | 415 | 278,1 | 2931 | 86,5 | 88,1 | 88,7 | 0,65 | 0,75 | 0,83 | | | | | | |
| | | | 380 | 337,2 | 2901 | 86,5 | 87,5 | 88,6 | 0,72 | 0,82 | 0,84 | | | | | | |
| **10R225** | 225 | 165 | 400 | 313,3 | 2920 | 85,4 | 87,2 | 88,5 | 0,71 | 0,81 | 0,86 | 1,55 | 6,50 | 1,80 | 3,30 | | |
| | | | 415 | 313,9 | 2930 | 86,0 | 87,3 | 88,2 | 0,65 | 0,75 | 0,83 | | | | | | |
| | | | 380 | 370 | 2904 | 87,4 | 88,0 | 89,0 | 0,73 | 0,83 | 0,85 | | | | | | |
| **10R250** | 250 | 185 | 400 | 342,2 | 2924 | 86,5 | 88,7 | 89,3 | 0,72 | 0,82 | 0,87 | 1,50 | 6,50 | 1,80 | 3,30 | | |
| | | | 415 | 340,9 | 2936 | 87,3 | 89,3 | 89,5 | 0,65 | 0,77 | 0,84 | | | | | | |

Service factor: 50Hz=1 - Direction of rotation (view from shaft projection side: anti-clockwise
Cs = Starting torque - Cn = Nominal couple - Is = Starting current - In = Nominal current

| TYPE | HP | kW | Cables | | Cable lenght | Max water temperature by winding type | |
|---|---|---|---|---|---|---|---|
| | | | Starting | | | | |
| | | | Direct | Star Delta | m | PPC | PE2-PA / LPE |
| | | | 400 V ± 5% | 400 / 690 V | | | |
| **10R100** | 100 | 75 | 3×1×25 mm² | 6×1×16 mm² | | | |
| **10R125** | 125 | 92 | 3×1×25 mm² | 6×1×16 mm² | | | |
| **10R150** | 150 | 110 | 3×1×35 mm² | 6×1×16 mm² | | | |
| **10R175** | 175 | 130 | 3×1×35 mm² | 6×1×25 mm² | 3 | 30 °C | 50 °C |
| **10R200** | 200 | 150 | 3×1×50 mm² | 6×1×25 mm² | | | |
| **10R225** | 225 | 165 | 3×1×50 mm² | 6×1×35 mm² | | | |
| **10R250** | 250 | 185 | 3×1×50 mm² | 6×1×35 mm² | | | |

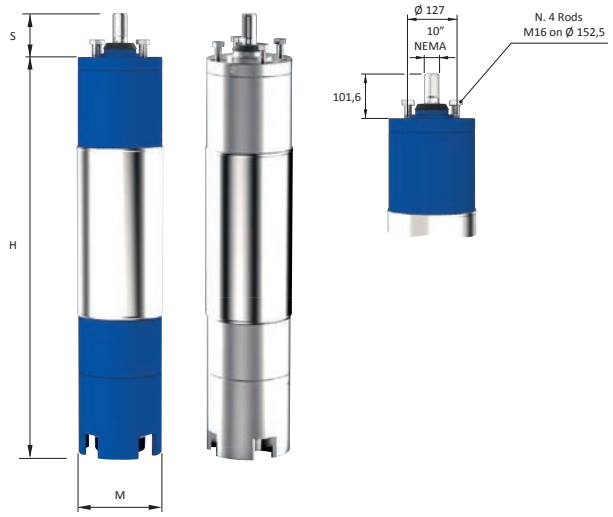


| TYPE | DIMENSIONS | | | Kg |
|---|---|---|---|---|
| | H | S | M | |
| | mm | | | |
| **10R100** | 1284 | | | 270 |
| **10R125** | 1354 | | | 310 |
| **10R150** | 1504 | | | 350 |
| **10R175** | 1634 | 101,6 | 240 | 385 |
| **10R200** | 1734 | | | 415 |
| **10R225** | 1854 | | | 444 |
| **10R250** | 1984 | | | 480 |

# 6R/8R/10R

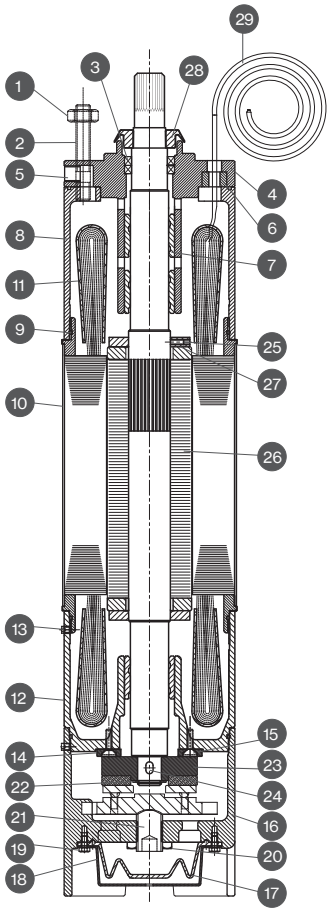


| N. CODE | (*) N° | DESCRIPTION | MATERIAL STANDARD VERSION R | MATERIAL VERSION RS-RX-RD |
|---|---|---|---|---|
| 1 | | **N.4 NUTS** | AISI 304 | AISI 304 / AISI 316 / DUPLEX |
| 2 | | **N.4 STUDS** | AISI 304 | AISI 304 / AISI 316 / DUPLEX |
| 3(*) | 1 | **N.2 SEAL RINGS** | NBR | NBR |
| 4 | | **UPPER SUPPORT** | CAST IRON | AISI 304 / AISI 316 / DUPLEX |
| 5 | | **N.2 GRAINS FOR LIQUID FILLING** | AISI 304 | AISI 304 / AISI 316 / DUPLEX |
| 6 | | **GROMMET** | NBR | NBR |
| 7(*) | 3 | **N.3 BEARINGS** | GRAPHITE | GRAPHITE |
| 8 | | **MOTOR CASING** | CAST IRON | AISI 304 / AISI 316 / DUPLEX |
| 9(*) | 4 | **N.4 O-RING** | NBR | NBR |
| 10 | | **MOTOR EXTERNAL SLEEVE** | AISI 304 | AISI 304 / AISI 316 / DUPLEX |
| 11 | | **N.2 COVERS WINDING PROTECTION** | POM | POM |
| 12 | | **LOWER SUPPORT** | CAST IRON | AISI 304 / AISI 316 / DUPLEX |
| 13 | | **N.3 SCREW** | AISI 304 | AISI 304 / AISI 316 / DUPLEX |
| 14(*) | 2 | **N.2 DISKS CONTROSUSPENTION** | TEFLON | TEFLON |
| 15 | | **N.2 SCREWS FOR CONTROSUSPENTION** | AISI 304 | AISI 304 |
| 16 | | **BASE MOTOR** | CAST IRON | AISI 304 / AISI 316 / DUPLEX |
| 17(*) | 1 | **DIAPHRAM** | NBR | NBR |
| 18 | | **COVER DIAPHRAM** | AISI 304 | AISI 304 / AISI 316 / DUPLEX |
| 19 | | **N.4 SCREW FOR COVER DIAPHRAM** | AISI 304 | AISI 304 / AISI 316 / DUPLEX |
| 20 | | **NUT** | AISI 304 | AISI 304 |
| 21 | | **SCREW** | AISI 304 | AISI 304 |
| 22 | | **SEEGER** | AISI 304 | AISI 304 |
| 23(*) | 1 | **TRUST BEARING** | AISI + GRAPHITE | AISI + GRAPHITE |
| 24 | | **KEY** | AISI 304 | AISI 304 |
| 25 | | **N.2 GRAINS FOR STABILIZER** | AISI 304 | AISI 304 |
| 26 | | **COMPLETE ROTOR** | AISI | AISI |
| 27 | | **N.2 STABILIZERS** | AISI | AISI |
| 28(*) | 1 | **DEFLECTOR** | NBR | NBR |
| 29 | | **CABLE** | H07 RNF | H07 RNF |

**Reccomended spare parts*

# OPERATING CONDITIONS AT DIFFERENT WATER TEMPERATURE

All 6” - 8” - 10” standard motors with PPC windings can operate at liquid temperatures up to 30 °C without derating factor. From 31 °C till 43 °C the motors have to be derated according to the factor shown in the following graph.

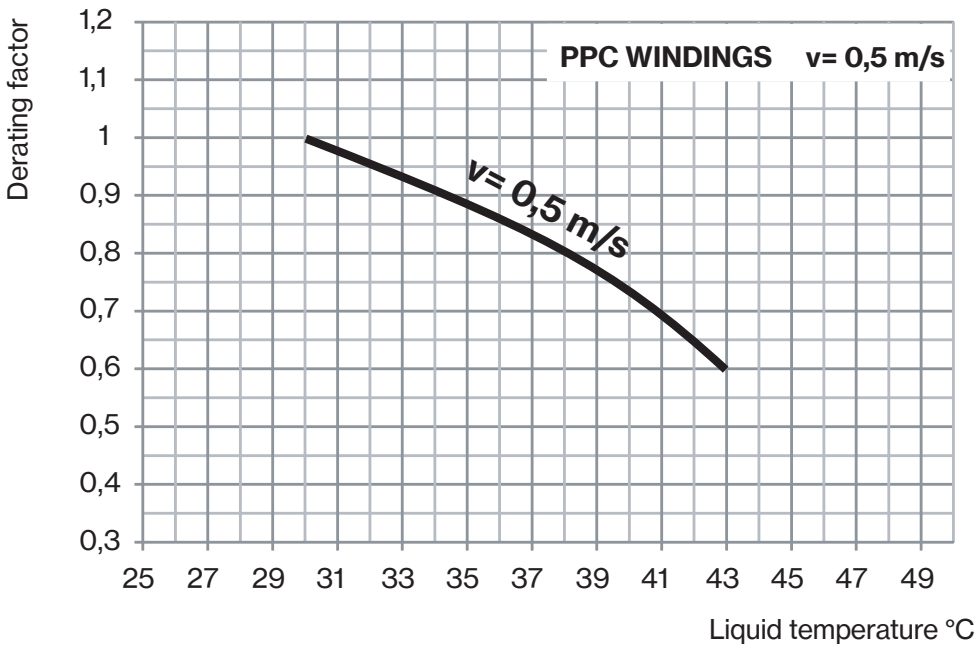


All 6” - 8” - 10” motors with PE2+PA / LPE windings can operate at liquid temperatures up to 50 °C without derating factor. From 51 °C till 64 °C the motors have to be derated according to the factor shown in the following graph.

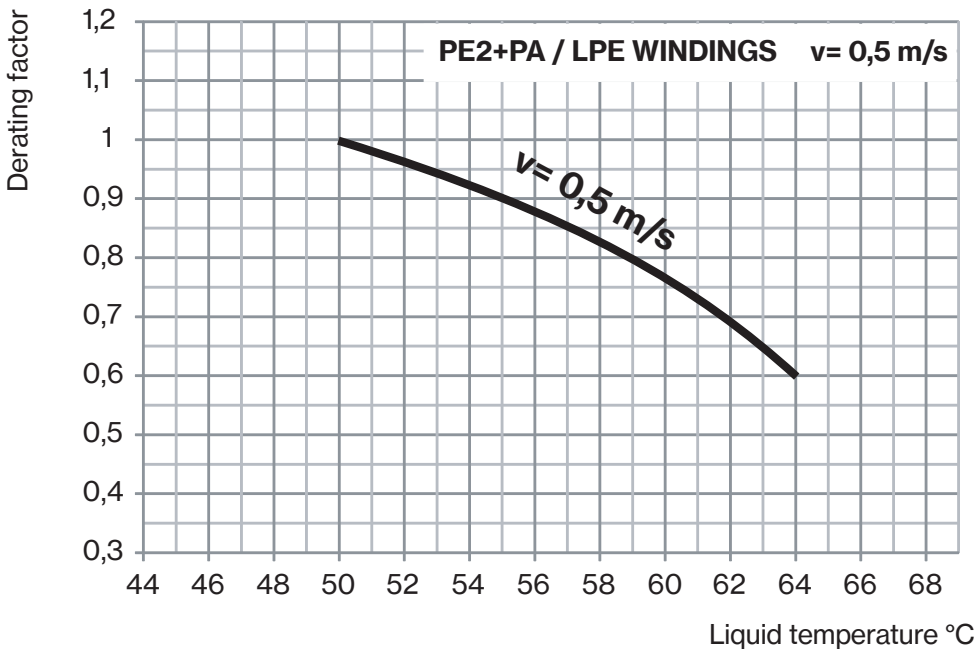


| Moter size | Max motor starts per hour | Winding max temperature (°C) | | | Liquid max temperature (°C) | | |
|---|---|---|---|---|---|---|---|
| | | PPC | LPE | PE2+PA | PPC | LPE | PE2+PA |
| **6”** | 15 | 70 | 80 | 80 | 30 | 50 | 50 |
| **8”** | 10 | 70 | 80 | 80 | 30 | 50 | 50 |
| **10”** | 10 | 70 | 80 | 80 | 30 | 50 | 50 |

*PPC = Y insulation class*
*LPE = F insulation class*
*PE2+PA = / F insulation class*
*Minimum liquid velocity for motor 6” - 8” - 10”: 0,5 m/s*

# PTR12/PTR14

## Submersible Well Motors

12” - 14” submersible rewindable water-filled motors. Power from 185 kW up to 400 kW. Standard PE2+PA winding insulation class for temperature up to 30°C.

| Construction features | |
|---|---|
| **Upper and bottom support** | GG25 or stainless steel AISI 316 |
| **Stator sleeve** | stainless steel AISI 316 |
| **Shaft end** | stainless steel |
| **Mechanical seal** | SIC / SIC / NBR |
| **Bearings** | steel / NBR |
| **Voltage** | 3~ 380-400V - 50Hz |
| **Cooling flow** | min 0,5 m/s |
| **Insulation class** | F |
| **Insulation** | PE2 + PA |
| **Protection degree** | IPX8 |
| **Available on demand** | - Full motor in AISI 316<br>- Full motor in AISI 904<br>- PT 100<br>- Star/Delta starting<br>- Cooling Sleeve<br>- Clockwise rotation |

**PTR 12 - 220kW-400V - T**

- motor type
- size (inches)
- nominal power
- nominal voltage
- motor **T** 3~

| TYPE 3~ 400V | V | $P_2$ | | $I_N$ | $I_S/I_N$ | $P_1$ | rpm | Efficiency | Cos Φ | DOL CABLE | | S/D CABLE | |
|---|---|---|---|---|---|---|---|---|---|---|---|---|---|
| | | | | | | | | | | Lenght | Size | Lenght | Size |
| | | HP | kW | A | | kW | | % | | m | mm² | m | mm² |
| **PTR12 - 170kW** | 3~ 400 | 230 | 170 | 329 | 6,1 | 193 | 2920 | 88 | 0,85 | 8 | 3x70+1x50 | 8 | 6x50+1×50 |
| **PTR12 - 190kW** | | 260 | 190 | 371 | 6,2 | 216 | 2930 | 88 | 0,84 | | 3x70+1x50 | | 6x50+1×50 |
| **PTR12 - 220kW** | | 300 | 220 | 424 | 6,1 | 250 | 2920 | 88 | 0,85 | | 3×70+1×50 | | 6x50+1×50 |
| **PTR12 - 250kW** | | 340 | 250 | 481 | 5,9 | 284 | 2920 | 88 | 0,85 | | 3×70+1×50 | | 6x50+1×50 |
| **PTR12 - 300kW** | | 400 | 300 | 575 | 6 | 341 | 2905 | 88 | 0,87 | | 3x70+1x50 | | 6x50+1×50 |

| TYPE 3~ 400V | V | $P_2$ | | $I_N$ | $I_S/I_N$ | $P_1$ | rpm | Efficiency | Cos Φ | S/D CABLE | |
|---|---|---|---|---|---|---|---|---|---|---|---|
| | | | | | | | | | | Lenght | Size |
| | | HP | kW | A | | kW | | % | | m | mm² |
| **PTR14 - 220kW** | 3~ 380 | 300 | 220 | 423 | 5,5 | 247 | 2900 | 89 | 0,89 | 8 | 6×70+1×50 |
| **PTR14 - 250kW** | | 340 | 250 | 479 | 6 | 528 | 2900 | 89 | 0,89 | | 6×70+1×50 |
| **PTR14 - 300kW** | | 400 | 300 | 551 | 5,8 | 327 | 2900 | 90 | 0,9 | | 6×95+1×50 |
| **PTR14 - 330kW** | | 450 | 330 | 620 | 6 | 367 | 2900 | 90 | 0,9 | | 6×95+1×50 |
| **PTR14 - 370kW** | | 500 | 370 | 693 | 6,4 | 406 | 2900 | 90,5 | 0,89 | | 6×95+1×50 |
| **PTR14 - 400kW** | | 550 | 400 | 798 | 6,8 | 446 | 2900 | 90,5 | 0,85 | | 6×95+1×50 |

| TYPE | DIMENSIONS | | | | Kg |
|---|---|---|---|---|---|
| | Power | | Axial load | L | |
| | HP | kW | N | mm | |
| **PTR12 - 170kW** | 230 | 170 | 70000 | 1880 | 605 |
| **PTR12 - 190kW** | 260 | 190 | | 1980 | 650 |
| **PTR12 - 220kW** | 300 | 220 | | 2110 | 700 |
| **PTR12 - 250kW** | 340 | 250 | | 2280 | 775 |
| **PTR12 - 300kW** | 400 | 300 | | 2280 | 775 |

| TYPE | DIMENSIONS | | | | Kg |
|---|---|---|---|---|---|
| | Power | | Axial load | L | |
| | HP | kW | N | mm | |
| **PTR14 - 220kW** | 300 | 220 | 70000 | 1760 | 663 |
| **PTR14 - 250kW** | 340 | 250 | | 1910 | 784 |
| **PTR14 - 300kW** | 400 | 300 | | 2020 | 845 |
| **PTR14 - 330kW** | 450 | 330 | | 2160 | 906 |
| **PTR14 - 370kW** | 500 | 370 | | 2320 | 1010 |
| **PTR14 - 400kW** | 550 | 400 | | 2460 | 1105 |

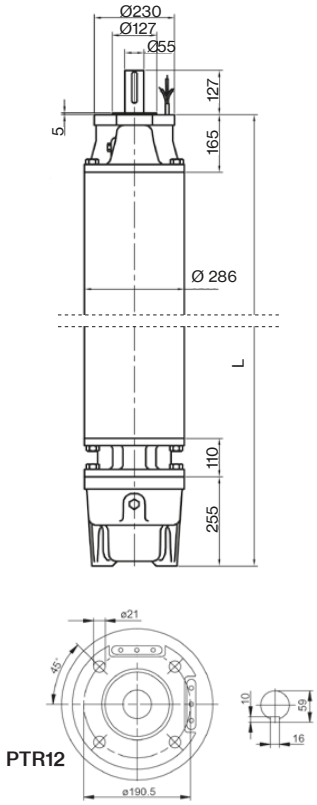

PTR12

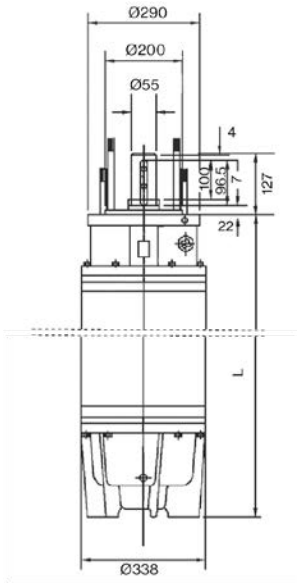

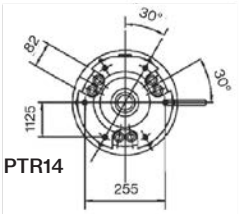

PTR14

## POWER DERATING AT DIFFERENT LIQUID TEMPERATURE

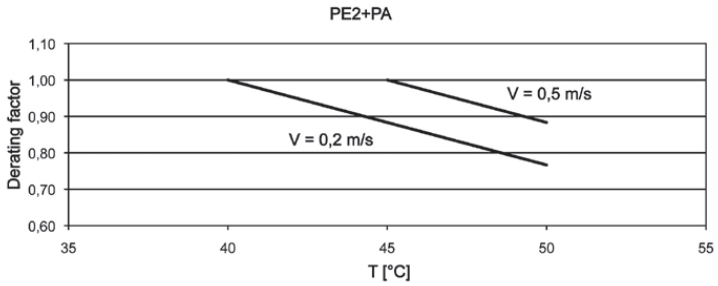


The graph above does not include the PTR12 220kW, 250kW and 300kW models.
The maximum temperature is 10° C for models PTR12 220kW and 250kW, 25° C for PTR12 300kW.

# PTR12/PTR14

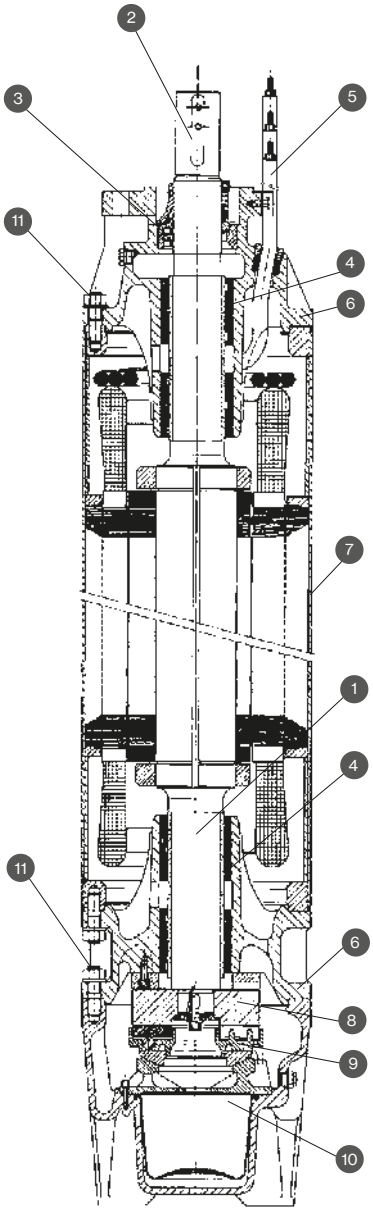


| N. | PARTS | STD VERSION | VERSION 316 SS | VERSION 904 SS |
|---|---|---|---|---|
| 1 | **SHAFT** | STAINLESS STEEL | STAINLESS STEEL | STAINLESS STEEL |
| 2 | **SHAFT TERMINAL** | AISI 316 | AISI 316 | AISI 904 |
| 3 | **MECHANICAL SEAL** | CERAMIC/CARBON | SIC/SIC | SIC/SIC |
| 4 | **BUSHES** | STEEL/NBR | STEEL/NBR | STEEL/NBR |
| 5 | **CABLE** | EPDM | EPDM | EPDM |
| 6 | **STRUCTURAL PARTS** | CAST IRON | AISI 316 | AISI 904 |
| 7 | **JACKET** | AISI 316 | AISI 316 | AISI 904 |
| 8 | **THRUST PLATE** | STEEL | STEEL | STEEL |
| 9 | **THRUST BEARING** | STEEL/NBR | STEEL/NBR | STEEL/NBR |
| 10 | **DIAPHRAGM** | EPDM | EPDM | EPDM |
| 11 | **SCREWS** | AISI 304 | AISI 316 | AISI 904 |

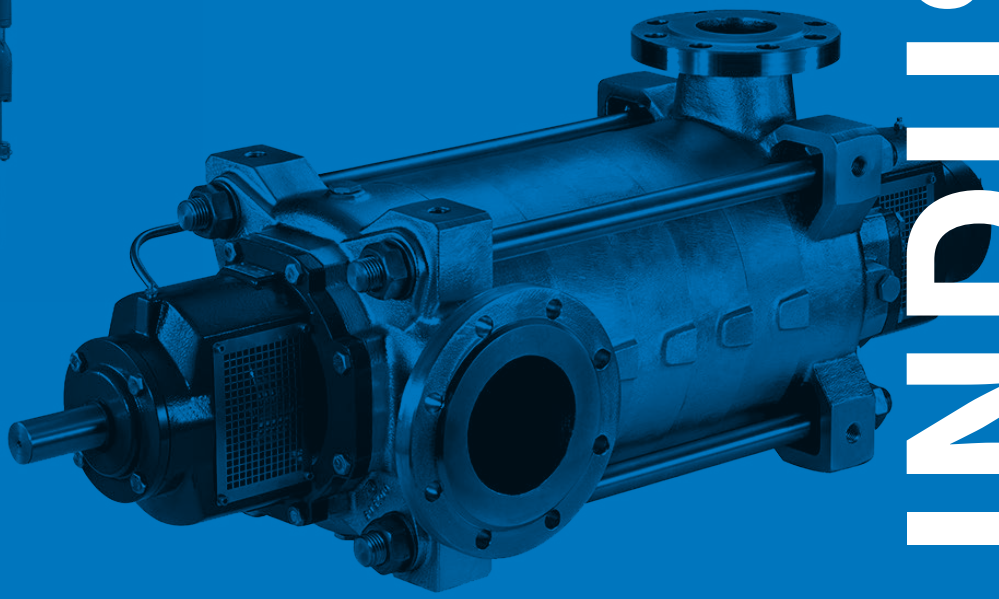

# INDUSTRIAL LINE

# MS-4MS

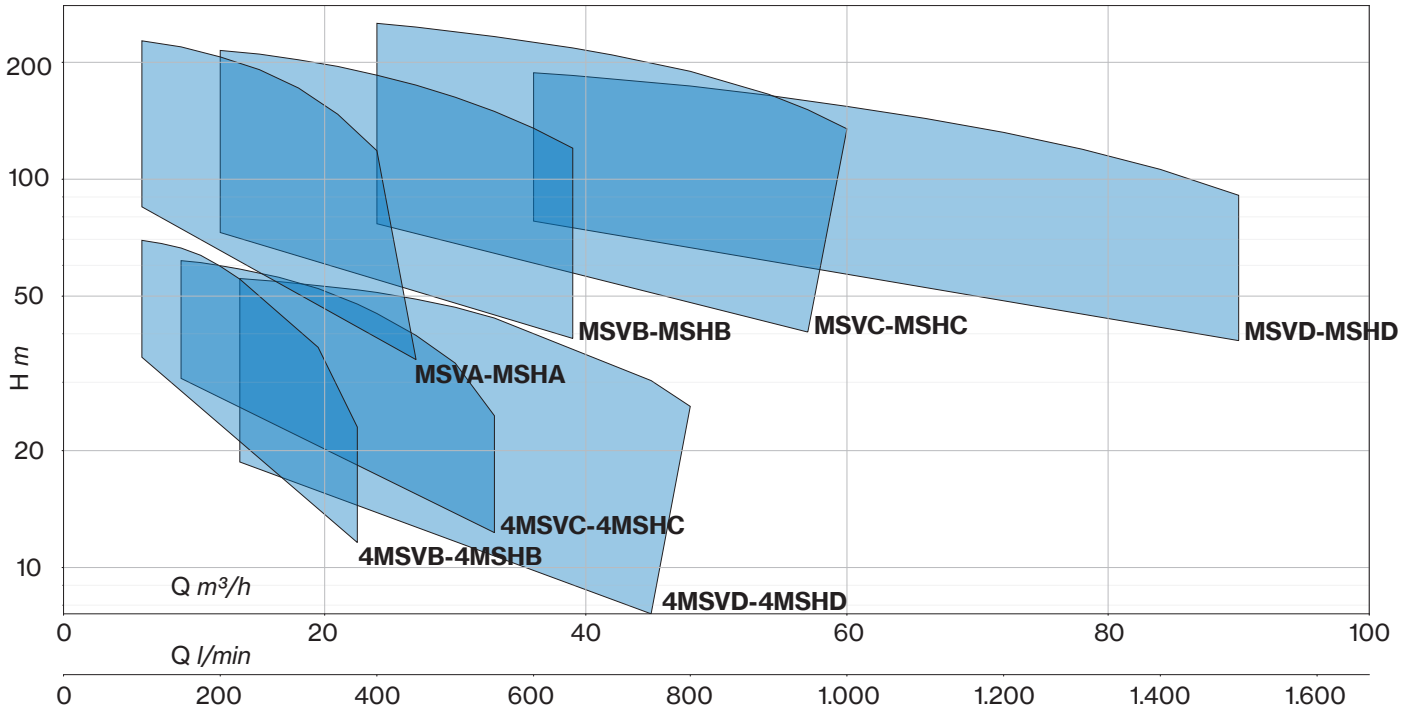
200
100
50
20
10
H m
MSVB-MSHB
MSVC-MSHC
MSVD-MSHD
MSVA-MSHA
4MSVC-4MSHC
4MSVB-4MSHB
4MSVD-4MSHD
Q m³/h
0
20
40
60
80
100
Q l/min
0
200
400
600
800
1.000
1.200
1.400
1.600

# MSV-4MSV



Multi-stage centrifugal pumps that guarantee high pressure. Particularly suitable for civil and industrial applications, in particular pressurisation, fire fighting and washing systems.

| Construction features | |
|---|---|
| **Pump body** | cast iron |
| **Motor bracket** | cast iron |
| **Impeller** | brass |
| **Mechanical seal** | ceramic-graphite-NBR |
| **Shaft** | stainless steel AISI 304 |
| **Liquid temperature** | -10 ÷ +90 °C |
| **Operating pressure** | max 30 bar |

| Motor | |
|---|---|
| **2 and 4 poles induction motor** | 3~ 230/400V - 50Hz P ⩽ 4kW<br>3~ 400/690V - 50Hz P > 4kW |
| **Insulation class** | F |
| **Protection degree** | IPX5 |

**MSV C - 3 / 18,5 -4 -01**

- direction of nozzles: standard; 01 02 03 on request
- mech. seal: standard; 4 Widia-Widia
- nominal power (HP)
- No. of impellers
- hydraulic size
- pump version: V vertical
- pump type

# MSV ~2900 rpm

| TYPE - 50 Hz | P2 | | P1 | CURRENT | Q (m³/h - l/min - l/s) | | | | | | | |
|---|---|---|---|---|---|---|---|---|---|---|---|---|
| | | | | 3~ 400V | 0 | 6 | 9 | 12 | 15 | 18 | 21 | 24 |
| | | | | | 0 | 100 | 150 | 200 | 250 | 300 | 350 | 400 |
| | | | | | 0 | 1,67 | 2,5 | 3,33 | 4,17 | 5 | 5,83 | 6,67 |
| | HP | kW | kW | A | H (m) | | | | | | | |
| **MSVA-3/5,5** | 7,5 | 5,5 | 6,0 | 10,1 | 88,2 | 86,3 | 83,7 | 78,6 | 71,2 | 62,6 | 53,4 | 43,2 |
| **MSVA-4/7,5** | 10 | 7,5 | 7,8 | 13,0 | 118,0 | 116,7 | 113,0 | 106,5 | 96,8 | 85,2 | 73,1 | 59,7 |
| **MSVA-5/9,2** | 12,5 | 9,2 | 9,8 | 16,4 | 148,2 | 145,9 | 138,8 | 130,0 | 119,8 | 105,2 | 90,7 | 73,8 |
| **MSVA-6/11** | 15 | 11 | 11,8 | 19,6 | 177,5 | 174,2 | 168,9 | 158,9 | 144,2 | 126,7 | 107,9 | 88,0 |
| **MSVA-8/15** | 20 | 15 | 15,5 | 26,3 | 237,8 | 233,4 | 227,0 | 213,8 | 194,8 | 171,4 | 146,0 | 119,5 |

| TYPE - 50 Hz | P2 | | P1 | CURRENT | Q (m³/h - l/min - l/s) | | | | | | | | | | |
|---|---|---|---|---|---|---|---|---|---|---|---|---|---|---|---|
| | | | | 3~ 400V | 0 | 12 | 15 | 18 | 21 | 24 | 27 | 30 | 33 | 36 | 39 |
| | | | | | 0 | 200 | 250 | 300 | 350 | 400 | 450 | 500 | 550 | 600 | 650 |
| | | | | | 0 | 3,33 | 4,17 | 5 | 5,83 | 6,67 | 7,5 | 8,33 | 9,17 | 10 | 10,83 |
| | HP | kW | kW | A | H (m) | | | | | | | | | | |
| **MSVB-2/7,5** | 10 | 7,5 | 8,2 | 13,4 | 74,5 | 72,7 | 71,1 | 68,7 | 66,1 | 62,4 | 58,3 | 53,8 | 49,0 | 43,9 | 38,6 |
| **MSVB-3R/9,2** | 12,5 | 9,2 | 10,0 | 16,7 | 101,8 | 98,9 | 96,2 | 91,4 | 87,4 | 81,0 | 74,3 | 66,5 | 58,8 | 50,8 | 42,4 |
| **MSVB-3/11** | 15 | 11 | 11,8 | 19,6 | 112,7 | 109,2 | 106,9 | 102,9 | 99,6 | 94,1 | 88,1 | 81,3 | 74,5 | 67,2 | 59,3 |
| **MSVB-4/15** | 20 | 15 | 15,9 | 26,5 | 149,7 | 146,5 | 143,4 | 138,2 | 133,4 | 125,4 | 117,1 | 107,4 | 97,8 | 87,7 | 76,2 |
| **MSVB-5/18,5** | 25 | 18,5 | 19,8 | 33,0 | 187,7 | 182,9 | 179,2 | 172,3 | 166,7 | 157,2 | 146,7 | 134,9 | 122,7 | 109,9 | 96,2 |
| **MSVB-6/22** | 30 | 22 | 23,6 | 38,8 | 225,9 | 220,4 | 216,3 | 207,1 | 201,1 | 189,6 | 176,6 | 162,5 | 147,5 | 131,7 | 115,1 |

| TYPE - 50 Hz | P2 | | P1 | CURRENT | Q (m³/h - l/min - l/s) | | | | | | | | |
|---|---|---|---|---|---|---|---|---|---|---|---|---|---|
| | | | | 3~ 400V | 0 | 18 | 24 | 30 | 36 | 42 | 48 | 54 | 57 |
| | | | | | 0 | 300 | 400 | 500 | 600 | 700 | 800 | 900 | 950 |
| | | | | | 0 | 5 | 6,67 | 8,33 | 10 | 11,67 | 13,33 | 15 | 15,83 |
| | HP | kW | kW | A | H (m) | | | | | | | | |
| **MSVC-2R1/11** | 15 | 11 | 13,0 | 21,4 | 78,4 | 79,5 | 76,3 | 72,3 | 67,6 | 61,8 | 55,2 | 46,9 | 41,8 |
| **MSVC-3R/15** | 20 | 15 | 17,4 | 28,9 | 110,4 | 111,9 | 107,2 | 101,5 | 94,5 | 85,8 | 75,3 | 61,5 | 53,0 |
| **MSVC-3/18,5** | 25 | 18,5 | 20,5 | 34,0 | 127,6 | 128,8 | 124,7 | 118,8 | 111,9 | 104,0 | 95,1 | 85,3 | 79,2 |
| **MSVC-4R1/22** | 30 | 22 | 25,3 | 41,5 | 159,5 | 159,0 | 153,6 | 145,7 | 136,3 | 125,0 | 112,2 | 98,1 | 88,3 |
| **MSVC-5/30** | 40 | 30 | 34,6 | 59,4 | 214,7 | 215,7 | 208,6 | 198,9 | 187,2 | 173,9 | 158,5 | 141,2 | 130,9 |
| **MSVC-6/37** | 50 | 37 | 41,2 | 72,8 | 256,5 | 257,1 | 249,2 | 238,2 | 224,6 | 209,0 | 191,3 | 170,7 | 158,9 |

| TYPE - 50 Hz | P2 | | P1 | CURRENT | Q (m³/h - l/min - l/s) | | | | | | | | | | |
|---|---|---|---|---|---|---|---|---|---|---|---|---|---|---|---|
| | | | | 3~ 400V | 0 | 30 | 36 | 42 | 48 | 54 | 60 | 66 | 72 | 78 | 84 |
| | | | | | 0 | 500 | 600 | 700 | 800 | 900 | 1000 | 1100 | 1200 | 1300 | 1400 |
| | | | | | 0 | 8,33 | 10 | 11,67 | 13,33 | 15 | 16,67 | 18,33 | 20 | 21,67 | 23,33 |
| | HP | kW | kW | A | H (m) | | | | | | | | | | |
| **MSVD-2/15** | 20 | 15 | 16,6 | 27,6 | 75,9 | 75,9 | 73,8 | 71,0 | 67,8 | 64,3 | 60,4 | 56,1 | 51,5 | 46,4 | 41,0 |
| **MSVD-3R/18,5** | 25 | 18,5 | 20,3 | 33,7 | 99,6 | 99,6 | 96,0 | 91,7 | 87,5 | 82,7 | 77,1 | 70,8 | 64,0 | 56,6 | 48,5 |
| **MSVD-3/22** | 30 | 22 | 23,7 | 39,3 | 113,1 | 113,9 | 110,8 | 106,7 | 102,0 | 96,9 | 91,4 | 85,4 | 78,8 | 71,2 | 63,0 |
| **MSVD-4/30** | 40 | 30 | 33,0 | 57,2 | 152,0 | 152,5 | 148,9 | 144,1 | 138,7 | 132,4 | 125,1 | 117,0 | 108,1 | 98,8 | 89,0 |
| **MSVD-5/37** | 50 | 37 | 40,6 | 71,9 | 189,6 | 191,4 | 186,4 | 179,9 | 173,3 | 165,7 | 157,0 | 147,0 | 136,0 | 124,5 | 112,3 |

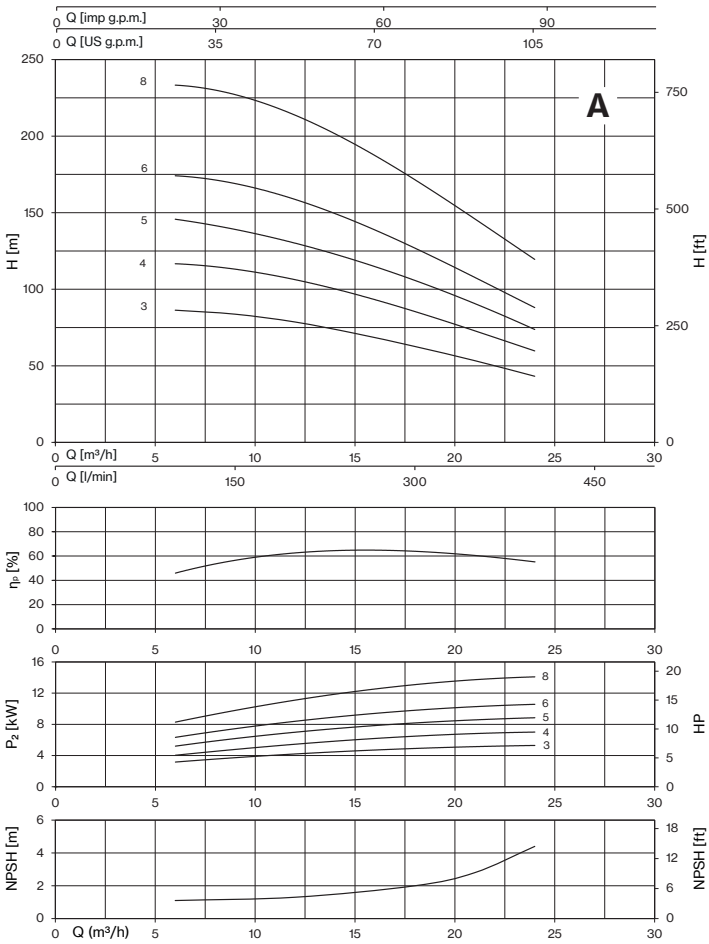


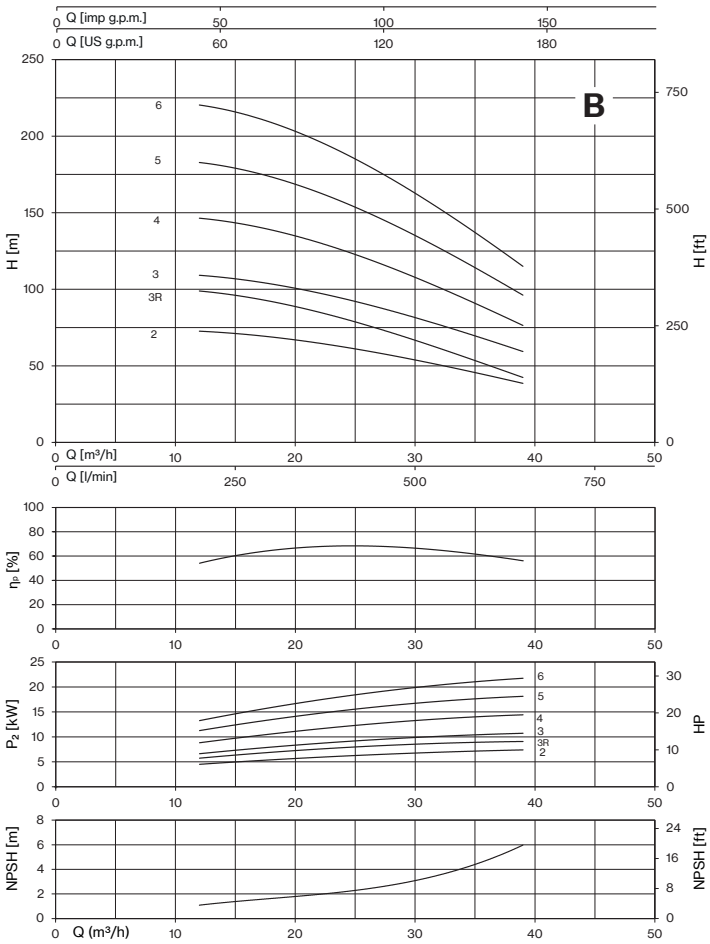


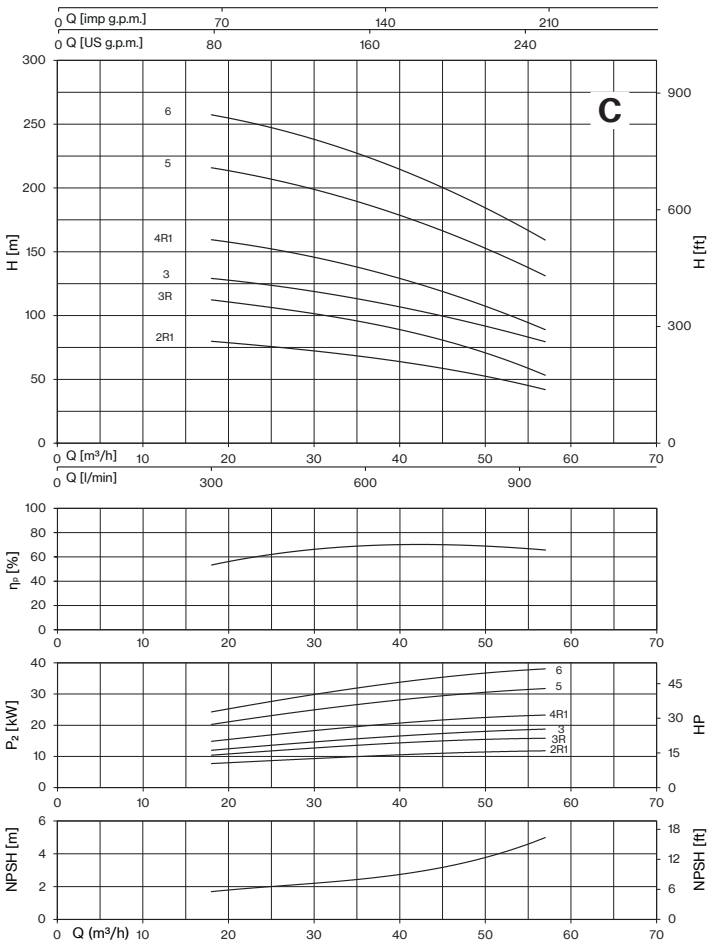


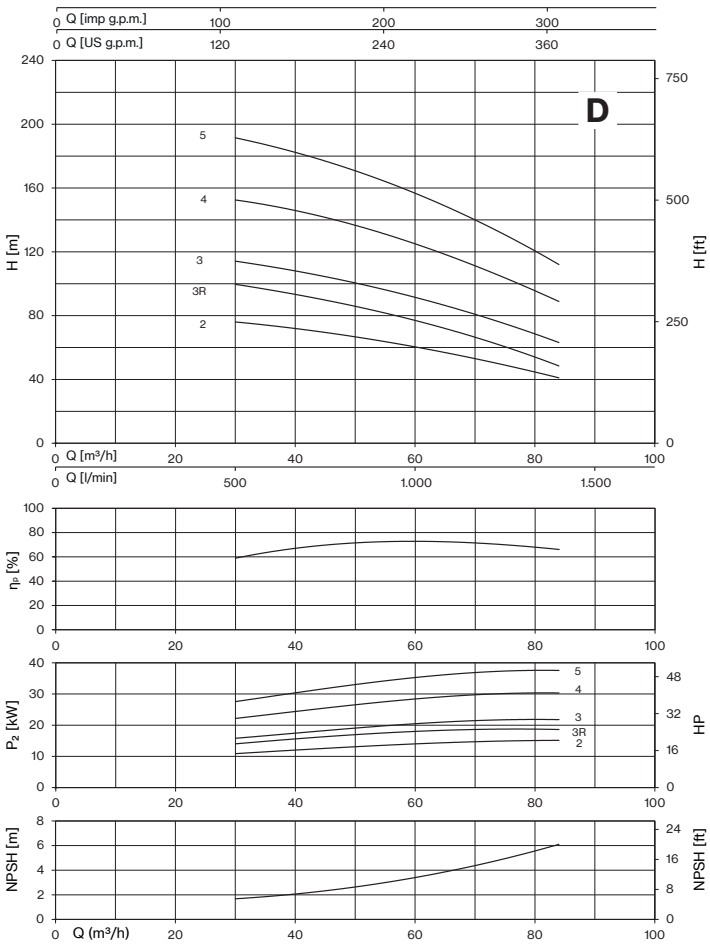


*Tolerance: ISO 9906:2012 - Grade 3B*

# 4MSV ~1450 rpm

| TYPE - 50 Hz | P2 | | Q (m³/h - l/min - l/s) | | | | | | | | |
|---|---|---|---|---|---|---|---|---|---|---|---|
| | | | 0 | 3 | 4,5 | 6 | 7,5 | 9 | 10,5 | 12 | 13,5 |
| | | | 0 | 50 | 75 | 100 | 125 | 150 | 175 | 200 | 225 |
| | | | 0 | 0,83 | 1,25 | 1,67 | 2,08 | 2,50 | 2,92 | 3,33 | 3,75 |
| | HP | kW | H (m) | | | | | | | | |
| **4MSVA-8/2,2** | 3 | 2,2 | 56,0 | 55,7 | 54,2 | 51,3 | 46,3 | 40,2 | 33,4 | 25,7 | 16,2 |

| TYPE - 50 Hz | P2 | | Q (m³/h - l/min - l/s) | | | | | | | | | |
|---|---|---|---|---|---|---|---|---|---|---|---|---|
| | | | 0 | 6 | 7,5 | 9 | 10,5 | 12 | 13,5 | 16,5 | 19,5 | 22,5 |
| | | | 0 | 100 | 125 | 150 | 175 | 200 | 225 | 275 | 325 | 375 |
| | | | 0 | 1,67 | 2,08 | 2,50 | 2,92 | 3,33 | 3,75 | 4,58 | 5,42 | 6,25 |
| | HP | kW | H (m) | | | | | | | | | |
| **4MSVB-4/2,2** | 3 | 2,2 | 35,4 | 34,8 | 34,0 | 32,8 | 31,2 | 29,3 | 27,0 | 22,0 | 16,9 | 11,6 |
| **4MSVB-5/2,2** | 3 | 2,2 | 44,3 | 43,5 | 42,5 | 41,0 | 39,0 | 36,6 | 33,8 | 27,5 | 21,1 | 14,6 |
| **4MSVB-6/3** | 4 | 3 | 53,2 | 52,2 | 51,3 | 49,9 | 47,8 | 44,7 | 41,5 | 34,4 | 27,7 | 17,2 |
| **4MSVB-8/4** | 5,5 | 4 | 70,9 | 69,6 | 68,3 | 66,5 | 63,7 | 59,7 | 55,3 | 45,9 | 36,9 | 23,0 |

| TYPE - 50 Hz | P2 | | Q (m³/h - l/min - l/s) | | | | | | | | | | | |
|---|---|---|---|---|---|---|---|---|---|---|---|---|---|---|
| | | | 0 | 9 | 10,5 | 12 | 13,5 | 16,5 | 19,5 | 22,5 | 24 | 27 | 30 | 33 |
| | | | 0 | 150 | 175 | 200 | 225 | 275 | 325 | 375 | 400 | 450 | 500 | 550 |
| | | | 0 | 2,50 | 2,92 | 3,33 | 3,75 | 4,58 | 5,42 | 6,25 | 6,67 | 7,50 | 8,33 | 9,17 |
| | HP | kW | H (m) | | | | | | | | | | | |
| **4MSVC-3/2,2** | 3 | 2,2 | 30,2 | 30,7 | 30,5 | 30,0 | 29,4 | 27,9 | 26,2 | 24,0 | 22,8 | 20,0 | 16,7 | 12,3 |
| **4MSVC-4/3** | 4 | 3 | 40,1 | 41,0 | 40,6 | 39,9 | 39,1 | 37,3 | 35,0 | 32,0 | 30,3 | 26,9 | 23,1 | 16,4 |
| **4MSVC-5/4** | 5,5 | 4 | 50,1 | 51,3 | 50,8 | 49,9 | 48,8 | 46,6 | 43,8 | 40,0 | 37,8 | 33,0 | 27,8 | 21,0 |
| **4MSVC-6/5,5** | 7,5 | 5,5 | 60,3 | 61,7 | 61,0 | 59,9 | 58,7 | 55,9 | 52,3 | 47,7 | 45,1 | 39,6 | 33,6 | 24,6 |

| TYPE - 50 Hz | P2 | | Q (m³/h - l/min - l/s) | | | | | | | | | | | |
|---|---|---|---|---|---|---|---|---|---|---|---|---|---|---|
| | | | 0 | 13,5 | 16,5 | 19,5 | 22,5 | 24 | 27 | 30 | 33 | 39 | 45 | 48 |
| | | | 0 | 225 | 275 | 325 | 375 | 400 | 450 | 500 | 550 | 650 | 750 | 800 |
| | | | 0 | 3,75 | 4,58 | 5,42 | 6,25 | 6,67 | 7,50 | 8,33 | 9,17 | 10,83 | 12,50 | 13,33 |
| | HP | kW | H (m) | | | | | | | | | | | |
| **4MSVD-2/2,2** | 3 | 2,2 | 18,3 | 18,7 | 18,4 | 18,0 | 17,5 | 17,2 | 16,5 | 15,7 | 14,7 | 12,3 | 7,6 | |
| **4MSVD-3/3** | 4 | 3 | 27,1 | 27,7 | 27,3 | 26,7 | 26,0 | 25,6 | 24,6 | 23,5 | 22,0 | 18,4 | 14,2 | |
| **4MSVD-4/4** | 5,5 | 4 | 36,2 | 36,8 | 36,1 | 35,2 | 34,1 | 33,6 | 32,3 | 30,6 | 28,7 | 24,2 | 19,2 | |
| **4MSVD-5/5,5** | 7,5 | 5,5 | 45,2 | 46,3 | 45,4 | 44,4 | 43,2 | 42,6 | 41,0 | 39,0 | 36,6 | 30,9 | 25,3 | 22,0 |
| **4MSVD-6/7,5** | 10 | 7,5 | 54,2 | 55,5 | 54,5 | 53,2 | 51,9 | 51,1 | 49,1 | 46,8 | 43,9 | 37,0 | 30,3 | 26,0 |

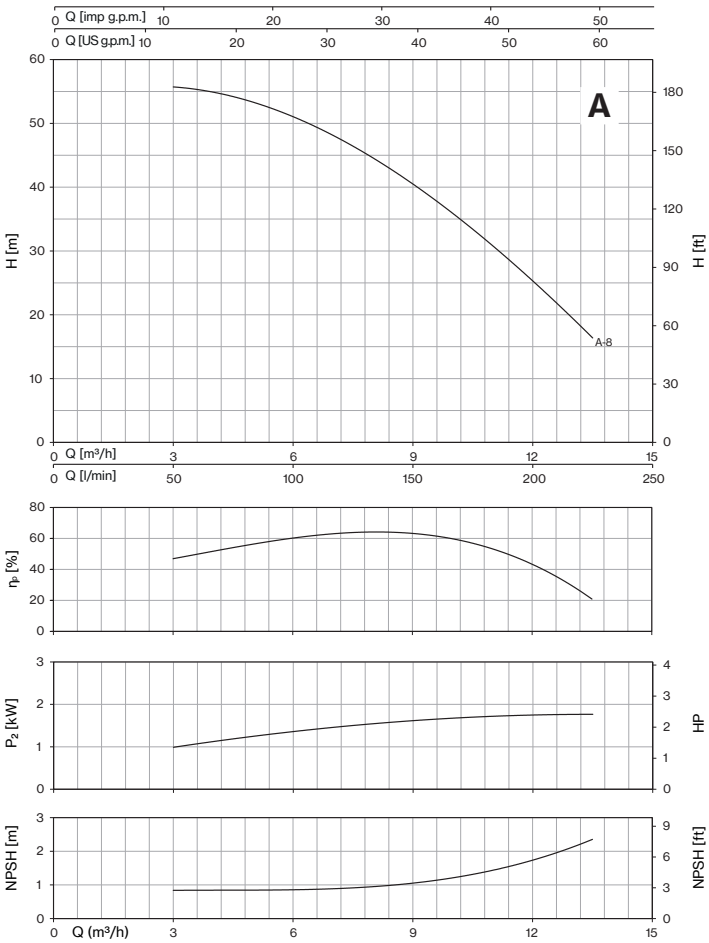
A
Q [imp g.p.m.]
Q [US g.p.m.]
H [m]
H [ft]
A-8
Q [m³/h]
Q [l/min]
ηP [%]
P2 [kW]
HP
NPSH [m]
NPSH [ft]
Q (m³/h)

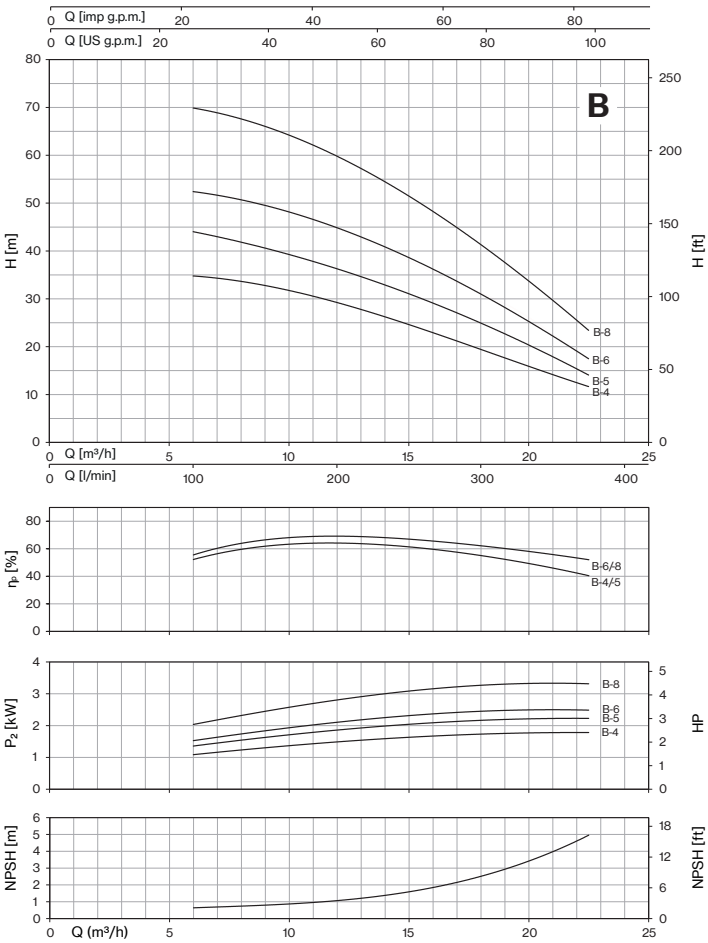
B
Q [imp g.p.m.]
Q [US g.p.m.]
H [m]
H [ft]
B-8
B-6
B-5
B-4
Q [m³/h]
Q [l/min]
ηP [%]
B-6/8
B-4/5
P2 [kW]
HP
NPSH [m]
NPSH [ft]
Q (m³/h)

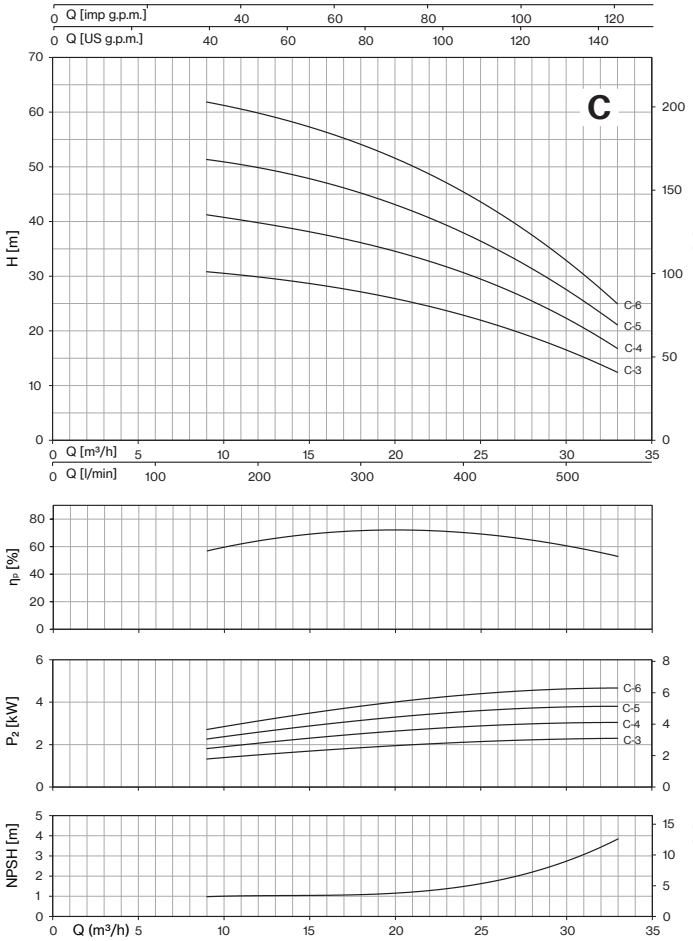
C
Q [imp g.p.m.]
Q [US g.p.m.]
H [m]
H [ft]
C-6
C-5
C-4
C-3
Q [m³/h]
Q [l/min]
ηP [%]
P2 [kW]
HP
NPSH [m]
NPSH [ft]
Q (m³/h)

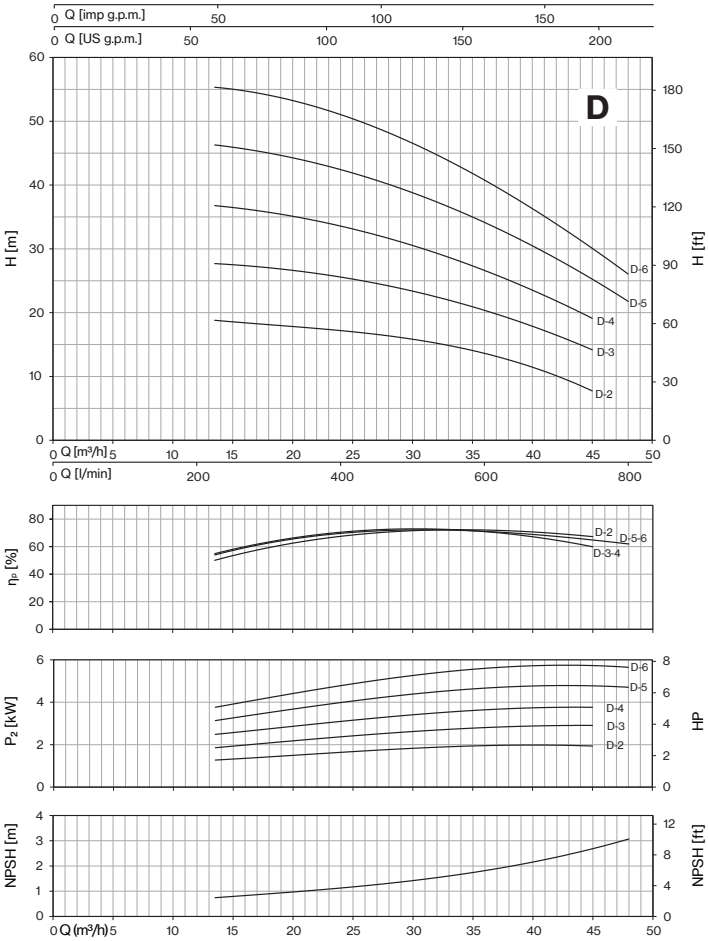
D
Q [imp g.p.m.]
Q [US g.p.m.]
H [m]
H [ft]
D-6
D-5
D-4
D-3
D-2
Q [m³/h]
Q [l/min]
ηP [%]
D-2
D-5-6
D-3-4
P2 [kW]
HP
NPSH [m]
NPSH [ft]
Q (m³/h)

# MSV-4MSV

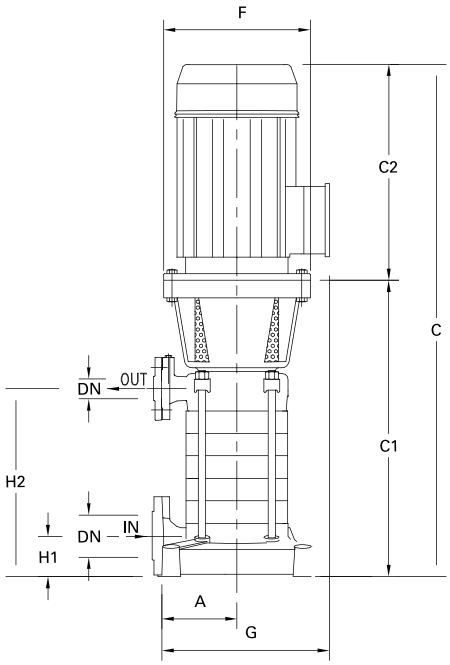


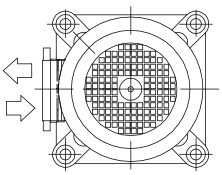

Standard pos.

STANDARD

Not available for pump type: MSVB 2/7.5, MSVC-2R1/11, MSVD-2/15, 4MSVD-2/2.2

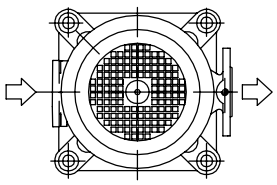

Pos. 01

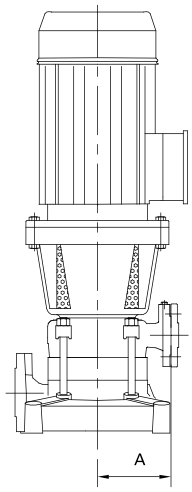


STANDARD FOR:

MSVB-2/7.5
MSVC-2R1/11
MSVD-2/15
4MSVD-2/2.2

## Direction of nozzles

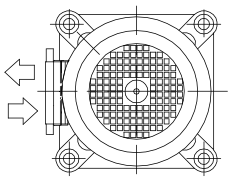

Standard pos.

Not available for pump type: MSVB 2/7.5, MSVC-2R1/11, MSVD-2/15, 4MSVD-2/2.2

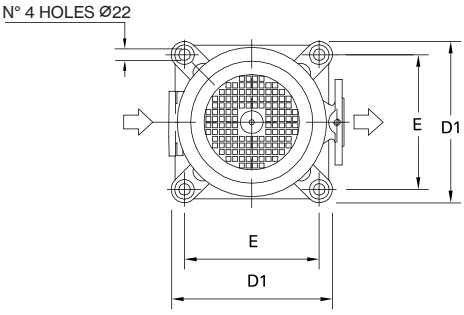


Pos. 01

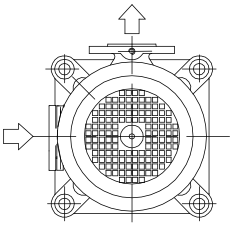

Pos. 02

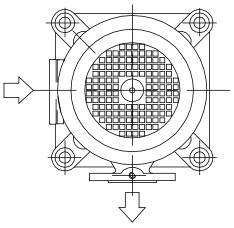

Pos. 03

| DIMENSIONS (mm) | | | | |
|---|---|---|---|---|
| DN | D | K | holes | |
| | | | n° | ø |
| 40 | 150 | 110 | 4 | 18 |
| 50 | 165 | 125 | 4 | 18 |
| 65 | 185 | 145 | 4 | 18 |
| 80 | 200 | 160 | 8 | 18 |

flanges

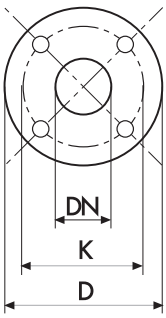

# MSV ~2900 rpm

| TYPE | DN IN | DN OUT | N. STAGE | DIMENSIONS (mm) | | | | | | | | | | | | | Kg |
|---|---|---|---|---|---|---|---|---|---|---|---|---|---|---|---|---|---|
| | | | | A | C | C1 | C2 | D1 | E | F | G | H1 | H2 | I | L | M | |
| **MSVA-3/5,5** | (UNI PN 16) 50 | (UNI PN 40) 40 | 3 | 175 | 921,5 | 544,5 | 377 | 306 | 256 | 300 | 355 | 82 | 255,5 | 1100 | 400 | 500 | 139,5 |
| **MSVA-4/7,5** | | | 4 | | 972,5 | 595,5 | 377 | | | 300 | 355 | | 306,5 | 1100 | 400 | 500 | 156 |
| **MSVA-5/9,2** | | | 5 | | 1062,5 | 646,5 | 416 | | | 300 | 355 | | 357,5 | 1100 | 400 | 500 | 173 |
| **MSVA-6/11** | | | 6 | | 1113,5 | 697,5 | 416 | | | 300 | 355 | | 408,5 | 1100 | 400 | 500 | 192 |
| **MSVA-8/15** | | | 8 | | 1297,5 | 799,5 | 498 | | | 350 | 410 | | 510,5 | 1400 | 500 | 500 | 259 |
| **MSVB-2/7,5** | (UNI PN 16) 50 | (UNI PN 40) 40 | 2 | 175 | 870,5 | 493,5 | 377 | 306 | 256 | 300 | 355 | 82 | 204,5 | 1100 | 400 | 500 | 136,5 |
| **MSVB-3R/9,2** | | | 3 | | 931 | 515 | 416 | | | 300 | 335 | | 255,5 | 1100 | 400 | 500 | 153,5 |
| **MSVB-3/11** | | | 3 | | 931 | 515 | 416 | | | 300 | 355 | | 255,5 | 1100 | 400 | 500 | 157,5 |
| **MSVB-4/15** | | | 4 | | 1013 | 515 | 498 | | | 350 | 410 | | 306,5 | 1400 | 500 | 500 | 220,5 |
| **MSVB-5/18,5** | | | 5 | | 1056 | 515 | 541 | | | 350 | 410 | | 357,5 | 1400 | 500 | 500 | 245 |
| **MSVB-6/22** | | | 6 | | 1056 | 515 | 541 | | | 350 | 410 | | 408,5 | 1400 | 500 | 500 | 265 |
| **MSVC-2R1/11** | (UNI PN 16) 65 | (UNI PN 40) 50 | 2 | 200 | 944 | 528 | 416 | 332 | 282 | 300 | 380 | 95 | 233 | 1100 | 400 | 500 | 167 |
| **MSVC-3R/15** | | | 3 | | 1086 | 588 | 498 | | | 350 | 435 | | 293 | 1100 | 400 | 500 | 234 |
| **MSVC-3/18,5** | | | 3 | | 1129 | 588 | 541 | | | 350 | 435 | | 293 | 1400 | 500 | 500 | 249 |
| **MSVC-4R1/22** | | | 4 | | 1189 | 648 | 541 | | | 350 | 435 | | 353 | 1400 | 500 | 500 | 273 |
| **MSVC-5/30** | | | 5 | | 1276 | 708 | 568 | | | 350 | 450 | | 413 | 1400 | 500 | 500 | 321,5 |
| **MSVC-6/37** | | | 6 | | 1376 | 768 | 608 | | | 350 | 450 | | 473 | 1400 | 500 | 500 | 360,5 |
| **MSVD-2/15** | (UNI PN 16) 65 | (UNI PN 40) 50 | 2 | 200 | 1026 | 528 | 498 | 332 | 282 | 350 | 435 | 95 | 233 | 1400 | 400 | 500 | 219 |
| **MSVD-3R/18,5** | | | 3 | | 1129 | 588 | 541 | | | 350 | 435 | | 293 | 1400 | 500 | 500 | 247 |
| **MSVD-3/22** | | | 3 | | 1129 | 588 | 541 | | | 350 | 435 | | 293 | 1400 | 500 | 500 | 257,5 |
| **MSVD-4/30** | | | 4 | | 1216 | 648 | 568 | | | 350 | 450 | | 353 | 1400 | 500 | 500 | 305 |
| **MSVD-5/37** | | | 5 | | 1316 | 708 | 608 | | | 350 | 450 | | 413 | 1400 | 500 | 500 | 342,5 |

# 4MSV ~1450 rpm

| TYPE | DN IN | DN OUT | N. STAGE | DIMENSIONS (mm) | | | | | | | | | | | | | Kg |
|---|---|---|---|---|---|---|---|---|---|---|---|---|---|---|---|---|---|
| | | | | A | C | C1 | C2 | D1 | E | F | G | H1 | H2 | I | L | M | |
| **4MSVA-8/2,2** | (UNI PN 16) 50 | (UNI PN 40) 40 | 8 | 175 | 1078 | 762,5 | 315 | 306 | 256 | 250 | 345 | 82 | 510,5 | 1100 | 400 | 500 | 183 |
| **4MSVB-4/2,2** | | | 4 | 175 | 874 | 558,5 | 315 | 306 | 256 | 250 | 345 | 82 | 306,5 | 1100 | 400 | 500 | 136 |
| **4MSVB-5/2,2** | | | 5 | | 925 | 609,5 | 315 | | | 250 | 345 | | 357,5 | 1400 | 500 | 500 | 140 |
| **4MSVB-6/3** | | | 6 | | 976 | 660,5 | 315 | | | 250 | 345 | | 408,5 | 1400 | 500 | 500 | 171 |
| **4MSVB-8/4** | | | 8 | | 1103 | 762,5 | 340 | | | 250 | 368 | | 511 | 1400 | 500 | 500 | 200 |
| **4MSVC-3/2,2** | (UNI PN 16) 65 | (UNI PN 40) 50 | 3 | 200 | 866 | 551 | 315 | 332 | 282 | 250 | 370 | 95 | 293 | 1100 | 400 | 500 | 192 |
| **4MSVC-4/3** | | | 4 | | 926 | 611 | 315 | | | 250 | 370 | | 353 | 1100 | 400 | 500 | 194 |
| **4MSVC-5/4** | | | 5 | | 1011 | 671 | 340 | | | 250 | 393 | | 413 | 1100 | 400 | 500 | 202 |
| **4MSVC-6/5,5** | | | 6 | | 1116 | 731 | 385 | | | 300 | 423 | | 473 | 1400 | 500 | 500 | 206 |
| **4MSVD-2/2,2** | (UNI PN 16) 65 | (UNI PN 40) 50 | 2 | 200 | 806 | 491 | 315 | 332 | 282 | 250 | 370 | 95 | 233 | 1100 | 400 | 500 | 135 |
| **4MSVD-3/3** | | | 3 | | 866 | 551 | 315 | | | 250 | 370 | | 293 | 1100 | 400 | 500 | 167 |
| **4MSVD-4/4** | | | 4 | | 951 | 611 | 340 | | | 250 | 393 | | 353 | 1100 | 400 | 500 | 189 |
| **4MSVD-5/5,5** | | | 5 | | 1056 | 671 | 385 | | | 300 | 423 | | 413 | 1100 | 400 | 500 | 194 |
| **4MSVD-6/7,5** | | | 6 | | 1156 | 731 | 425 | | | 300 | 423 | | 473 | 1400 | 500 | 500 | 218 |

# MSV-4MSV Serie-Mechanical seal and bearings

| MECHANICAL SEAL | PUMP MODEL | SHAFT Ø | | STANDARD MATERIAL | OPTIONAL |
|---|---|---|---|---|---|
| | | | | | 4 |
| | MSVA-3/5,5 \| MSVB-2/7,5 \| 4MSVA-8/2,2\| 4MSVB-4/2,2 \| 4MSVB-5/2,2 \| 4MSVB-6/3 \| 4MSVB-8/4 | 25mm | ***Rotating face***<br>***Stationary face***<br>***Elastomer*** | Ceramic<br>Graphite<br>NBR | Widia<br>Widia<br>NBR |
| | MSVC-2R1/11 \| MSVD-2/15 \| 4MSVC-3/2,2 \| 4MSVC-4/3 \| 4MSVC-5/4 \| 4MSVC-6/5,5 \| 4MSVD-2/2,2 \| 4MSVD-3/3 \| 4MSVD-4/4 \| 4MSVD-5/5,5 \| 4MSVD-6/7,5 | 35mm | ***Rotating face***<br>***Stationary face***<br>***Elastomer*** | Ceramic<br>Graphite<br>NBR | Widia<br>Widia<br>NBR |
| | MSVA-4/7,5 \| MSVA-5/9,2 \| MSVA-6/11 \| MSVA-8/15 \| MSVB-3R/9,2 \| MSVB-3/11 \| MSVB-4/15 \| MSVB-5/18,5 \| MSVB-6/22 | 25mm / Balanced seal | ***Rotating face***<br>***Stationary face***<br>***Elastomer*** | Widia<br>Graphite<br>NBR | Widia<br>Widia<br>NBR |
| | MSVC-3R/15 \| MSVC-3/18,5 \| MSVC-4R1/22 \| MSVC-5/30 \| MSVC-6/37 \| MSVD-3R/18,5 \| MSVD-3/22 \| MSVD-4/30 \| MSVD-5/37 | 35mm / Balanced seal | ***Rotating face***<br>***Stationary face***<br>***Elastomer*** | Widia<br>Graphite<br>NBR | Widia<br>Widia<br>NBR |

| BEARINGS | PUMP MODEL | TYPE | |
|---|---|---|---|
| | 4MSVA-8/2,2 \| 4MSVB-4/2,2 \| 4MSVB-5/2,2 \| 4MSVC-3/2,2 \| 4MSVD-2/2,2 | 6205-ZZ C3 | 6205-ZZ C3 |
| | 4MSVB-6/3 \| 4MSVB-8/4 \| 4MSVC-4/3 \| 4MSVC-5/4 \| 4MSVD-3/3 \| 4MSVD-4/4 | 6206-ZZ C3 | 6206-ZZ C3 |
| | MSVA-3/5,5-132S \| MSVA-4/7,5-132S \| MSVA-5/9,2-132M \| MSVA-6/11-132M \| MSVB-2/7,5-132S \| MSVB-3R/9,2-132M \| MSVB-3/11-132M \| MSVC-2R1/11-132M | 6206-ZZ C3 | 6308-ZZ C3 |
| | 4MSVC-6/5,5-132S \| 4MSVD-5/5,5-132S \| 4MSVD-6/7,5-132S | 6208-ZZ C3 | 6208-ZZ C3 |
| | MSVA-8/15-160M \| MSVB-4/15-160M \| MSVB-5/18,5-160L \| MSVB-6/22-160L \| MSVC-3R/15-160M \| MSVC-3/18,5-160L \| MSVC-4R1/22-160L \| MSVD-2/15-160M \| MSVD-3R/18,5-160L \| MSVD-3/22-160L | 6308-ZZ C3 | 6309-ZZ C3 |
| | MSVC-5/30-180M \| MSVC-6/37-180L \| MSVD-4/30-180M \| MSVD-5/37-180L | 6309-ZZ C3 | 3310-ZZ C3 |

# MSH-4MSH



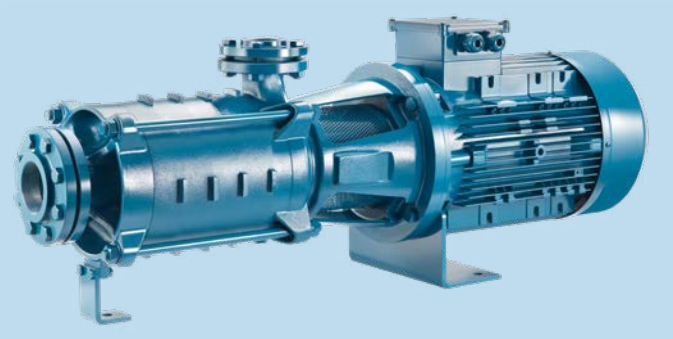

Multi-stage centrifugal pumps that guarantee high pressure. Particularly suitable for civil and industrial applications, in particular pressurisation, fire fighting and washing systems.

## Construction features

| | |
|---|---|
| **Pump body** | cast iron |
| **Motor bracket** | cast iron |
| **Impeller** | brass |
| **Mechanical seal** | ceramic-graphite-NBR |
| **Shaft** | stainless steel AISI 304 |
| **Liquid temperature** | -10 ÷ +90 °C |
| **Operating pressure** | max 30 bar |

## Motor

| | |
|---|---|
| **2 and 4 poles induction motor** | 3~ 230/400V - 50Hz P ⩽ 4kW<br>3~ 400/690V - 50Hz P > 4kW |
| **Insulation class** | F |
| **Protection degree** | IPX5 |

**MSH C - 3 / 18,5 -4 -01**

- direction of nozzles: standard; **01** **02** on request
- mech. seal: standard; **4** Widia-Widia
- nominal power (HP)
- No. of impellers
- hydraulic size
- pump version: **H** horizontal
- pump type

# MSH ~2900 rpm

| TYPE - 50 Hz | P2 | | P1 | CURRENT | Q (m³/h - l/min - l/s) | | | | | | | |
|---|---|---|---|---|---|---|---|---|---|---|---|---|
| | | | | 3~ 400V | 0 | 6 | 9 | 12 | 15 | 18 | 21 | 24 |
| | | | | | 0 | 100 | 150 | 200 | 250 | 300 | 350 | 400 |
| | | | | | 0 | 1,67 | 2,5 | 3,33 | 4,17 | 5 | 5,83 | 6,67 |
| | HP | kW | kW | A | H (m) | | | | | | | |
| **MSHA-3/5,5** | 7,5 | 5,5 | 6,0 | 10,1 | 88,2 | 86,3 | 83,7 | 78,6 | 71,2 | 62,6 | 53,4 | 43,2 |
| **MSHA-4/7,5** | 10 | 7,5 | 7,8 | 13,0 | 118,0 | 116,7 | 113,0 | 106,5 | 96,8 | 85,2 | 73,1 | 59,7 |
| **MSHA-5/9,2** | 12,5 | 9,2 | 9,8 | 16,4 | 148,2 | 145,9 | 138,8 | 130,0 | 119,8 | 105,2 | 90,7 | 73,8 |
| **MSHA-6/11** | 15 | 11 | 11,8 | 19,6 | 177,5 | 174,2 | 168,9 | 158,9 | 144,2 | 126,7 | 107,9 | 88,0 |
| **MSHA-8/15** | 20 | 15 | 15,5 | 26,3 | 237,8 | 233,4 | 227,0 | 213,8 | 194,8 | 171,4 | 146,0 | 119,5 |

| TYPE - 50 Hz | P2 | | P1 | CURRENT | Q (m³/h - l/min - l/s) | | | | | | | | | | |
|---|---|---|---|---|---|---|---|---|---|---|---|---|---|---|---|
| | | | | 3~ 400V | 0 | 12 | 15 | 18 | 21 | 24 | 27 | 30 | 33 | 36 | 39 |
| | | | | | 0 | 200 | 250 | 300 | 350 | 400 | 450 | 500 | 550 | 600 | 650 |
| | | | | | 0 | 3,33 | 4,17 | 5 | 5,83 | 6,67 | 7,5 | 8,33 | 9,17 | 10 | 10,83 |
| | HP | kW | kW | A | H (m) | | | | | | | | | | |
| **MSHB-2/7,5** | 10 | 7,5 | 8,2 | 13,4 | 74,5 | 72,7 | 71,1 | 68,7 | 66,1 | 62,4 | 58,3 | 53,8 | 49,0 | 43,9 | 38,6 |
| **MSHB-3R/9,2** | 12,5 | 9,2 | 10,0 | 16,7 | 101,8 | 98,9 | 96,2 | 91,4 | 87,4 | 81,0 | 74,3 | 66,5 | 58,8 | 50,8 | 42,4 |
| **MSHB-3/11** | 15 | 11 | 11,8 | 19,6 | 112,7 | 109,2 | 106,9 | 102,9 | 99,6 | 94,1 | 88,1 | 81,3 | 74,5 | 67,2 | 59,3 |
| **MSHB-4/15** | 20 | 15 | 15,9 | 26,5 | 149,7 | 146,5 | 143,4 | 138,2 | 133,4 | 125,4 | 117,1 | 107,4 | 97,8 | 87,7 | 76,2 |
| **MSHB-5/18,5** | 25 | 18,5 | 19,8 | 33,0 | 187,7 | 182,9 | 179,2 | 172,3 | 166,7 | 157,2 | 146,7 | 134,9 | 122,7 | 109,9 | 96,2 |
| **MSHB-6/22** | 30 | 22 | 23,6 | 38,8 | 225,9 | 220,4 | 216,3 | 207,1 | 201,1 | 189,6 | 176,6 | 162,5 | 147,5 | 131,7 | 115,1 |

| TYPE - 50 Hz | P2 | | P1 | CURRENT | Q (m³/h - l/min - l/s) | | | | | | | | |
|---|---|---|---|---|---|---|---|---|---|---|---|---|---|
| | | | | 3~ 400V | 0 | 18 | 24 | 30 | 36 | 42 | 48 | 54 | 57 |
| | | | | | 0 | 300 | 400 | 500 | 600 | 700 | 800 | 900 | 950 |
| | | | | | 0 | 5 | 6,67 | 8,33 | 10 | 11,67 | 13,33 | 15 | 15,83 |
| | HP | kW | kW | A | H (m) | | | | | | | | |
| **MSHC-2R1/11** | 15 | 11 | 13,0 | 21,4 | 78,4 | 79,5 | 76,3 | 72,3 | 67,6 | 61,8 | 55,2 | 46,9 | 41,8 |
| **MSHC-3R/15** | 20 | 15 | 17,4 | 28,9 | 110,4 | 111,9 | 107,2 | 101,5 | 94,5 | 85,8 | 75,3 | 61,5 | 53,0 |
| **MSHC-3/18,5** | 25 | 18,5 | 20,5 | 34,0 | 127,6 | 128,8 | 124,7 | 118,8 | 111,9 | 104,0 | 95,1 | 85,3 | 79,2 |
| **MSHC-4R1/22** | 30 | 22 | 25,3 | 41,5 | 159,5 | 159,0 | 153,6 | 145,7 | 136,3 | 125,0 | 112,2 | 98,1 | 88,3 |
| **MSHC-5/30** | 40 | 30 | 34,6 | 59,4 | 214,7 | 215,7 | 208,6 | 198,9 | 187,2 | 173,9 | 158,5 | 141,2 | 130,9 |
| **MSHC-6/37** | 50 | 37 | 41,2 | 72,8 | 256,5 | 257,1 | 249,2 | 238,2 | 224,6 | 209,0 | 191,3 | 170,7 | 158,9 |

| TYPE - 50 Hz | P2 | | P1 | CURRENT | Q (m³/h - l/min - l/s) | | | | | | | | | | |
|---|---|---|---|---|---|---|---|---|---|---|---|---|---|---|---|
| | | | | 3~ 400V | 0 | 30 | 36 | 42 | 48 | 54 | 60 | 66 | 72 | 78 | 84 |
| | | | | | 0 | 500 | 600 | 700 | 800 | 900 | 1000 | 1100 | 1200 | 1300 | 1400 |
| | | | | | 0 | 8,33 | 10 | 11,67 | 13,33 | 15 | 16,67 | 18,33 | 20 | 21,67 | 23,33 |
| | HP | kW | kW | A | H (m) | | | | | | | | | | |
| **MSHD-2/15** | 20 | 15 | 16,6 | 27,6 | 75,9 | 75,9 | 73,8 | 71,0 | 67,8 | 64,3 | 60,4 | 56,1 | 51,5 | 46,4 | 41,0 |
| **MSHD-3R/18,5** | 25 | 18,5 | 20,3 | 33,7 | 99,6 | 99,6 | 96,0 | 91,7 | 87,5 | 82,7 | 77,1 | 70,8 | 64,0 | 56,6 | 48,5 |
| **MSHD-3/22** | 30 | 22 | 23,7 | 39,3 | 113,1 | 113,9 | 110,8 | 106,7 | 102,0 | 96,9 | 91,4 | 85,4 | 78,8 | 71,2 | 63,0 |
| **MSHD-4/30** | 40 | 30 | 33,0 | 57,2 | 152,0 | 152,5 | 148,9 | 144,1 | 138,7 | 132,4 | 125,1 | 117,0 | 108,1 | 98,8 | 89,0 |
| **MSHD-5/37** | 50 | 37 | 40,6 | 71,9 | 189,6 | 191,4 | 186,4 | 179,9 | 173,3 | 165,7 | 157,0 | 147,0 | 136,0 | 124,5 | 112,3 |

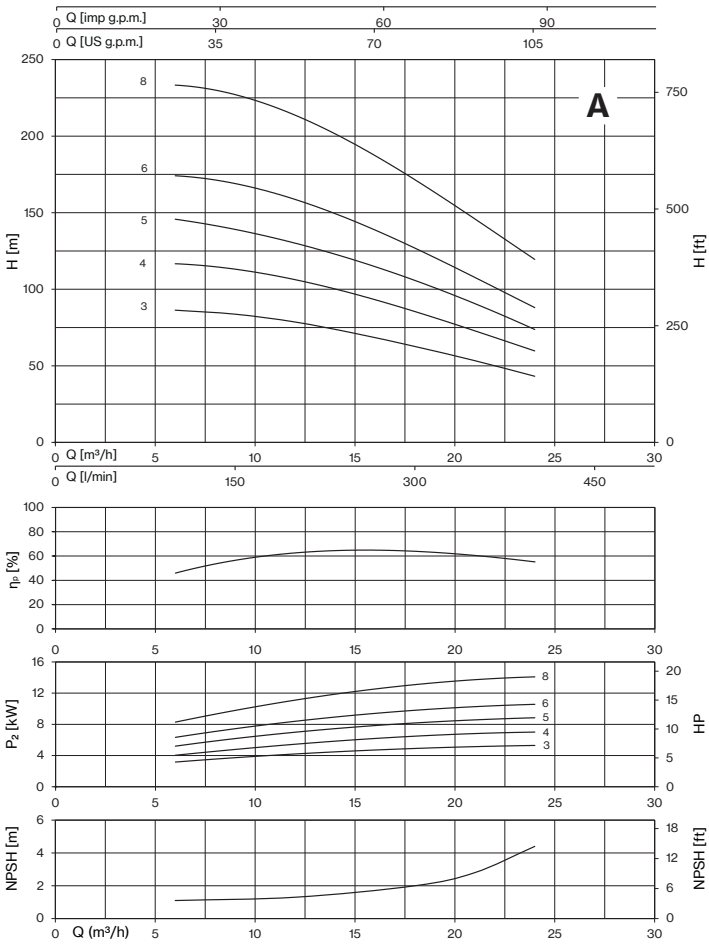
A
Q [imp g.p.m.]
Q [US g.p.m.]
Q [m³/h]
Q [l/min]
H [m]
H [ft]
ηP [%]
P2 [kW]
HP
NPSH [m]
NPSH [ft]
Q (m³/h)
8
6
5
4
3

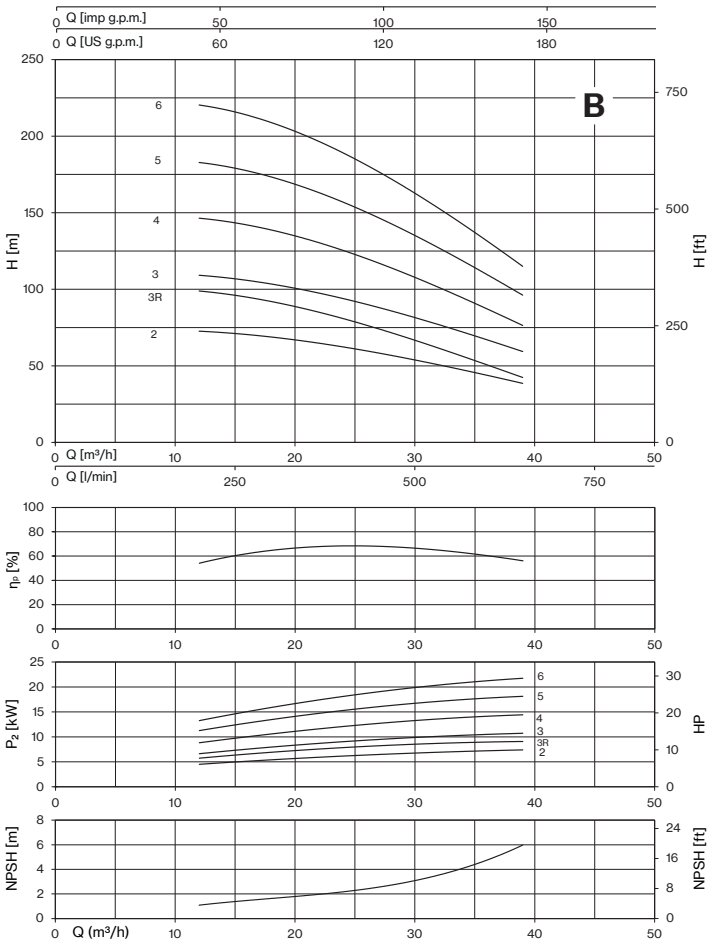
B
Q [imp g.p.m.]
Q [US g.p.m.]
Q [m³/h]
Q [l/min]
H [m]
H [ft]
ηP [%]
P2 [kW]
HP
NPSH [m]
NPSH [ft]
Q (m³/h)
6
5
4
3
3R
2

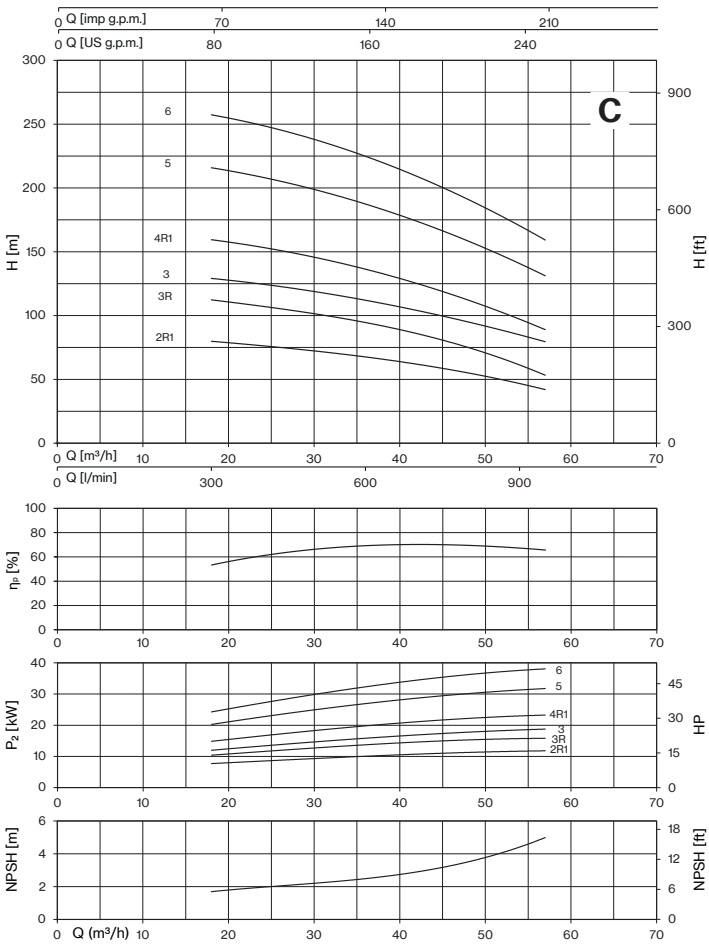
C
Q [imp g.p.m.]
Q [US g.p.m.]
Q [m³/h]
Q [l/min]
H [m]
H [ft]
ηP [%]
P2 [kW]
HP
NPSH [m]
NPSH [ft]
Q (m³/h)
6
5
4R1
3
3R
2R1

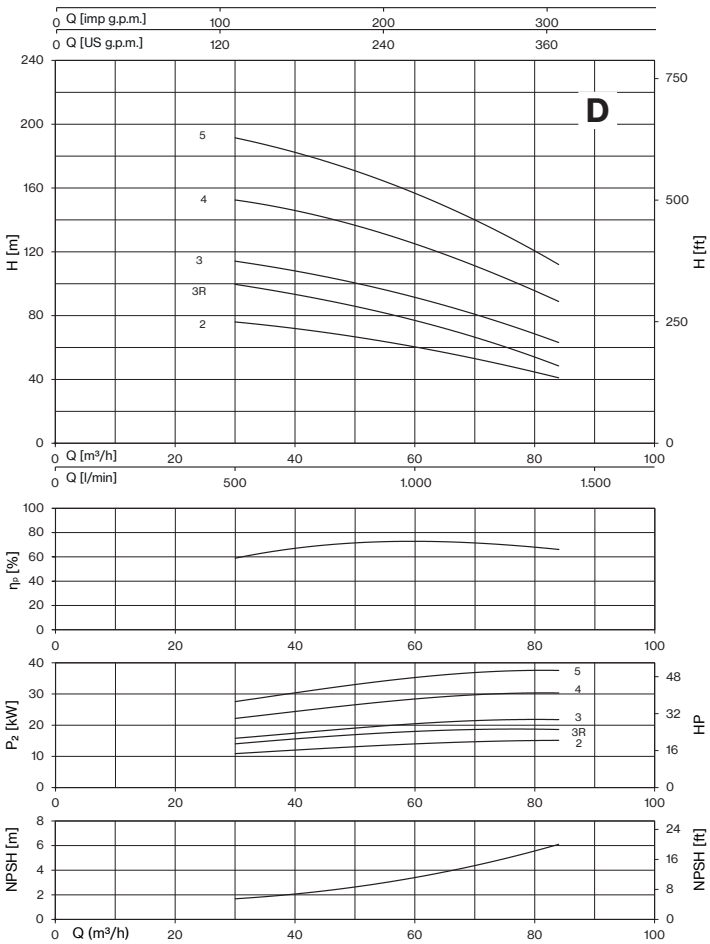
D
Q [imp g.p.m.]
Q [US g.p.m.]
Q [m³/h]
Q [l/min]
H [m]
H [ft]
ηP [%]
P2 [kW]
HP
NPSH [m]
NPSH [ft]
Q (m³/h)
5
4
3
3R
2

# 4MSH ~1450 rpm

| TYPE - 50 Hz | P2 | | Q (m³/h - l/min - l/s) | | | | | | | | |
|---|---|---|---|---|---|---|---|---|---|---|---|
| | | | 0 | 3 | 4,5 | 6 | 7,5 | 9 | 10,5 | 12 | 13,5 |
| | | | 0 | 50 | 75 | 100 | 125 | 150 | 175 | 200 | 225 |
| | | | 0 | 0,83 | 1,25 | 1,67 | 2,08 | 2,50 | 2,92 | 3,33 | 3,75 |
| | HP | kW | H (m) | | | | | | | | |
| **4MSHA-8/2,2** | 3 | 2,2 | 56,0 | 55,7 | 54,2 | 51,3 | 46,3 | 40,2 | 33,4 | 25,7 | 16,2 |

| TYPE - 50 Hz | P2 | | Q (m³/h - l/min - l/s) | | | | | | | | | |
|---|---|---|---|---|---|---|---|---|---|---|---|---|
| | | | 0 | 6 | 7,5 | 9 | 10,5 | 12 | 13,5 | 16,5 | 19,5 | 22,5 |
| | | | 0 | 100 | 125 | 150 | 175 | 200 | 225 | 275 | 325 | 375 |
| | | | 0 | 1,67 | 2,08 | 2,50 | 2,92 | 3,33 | 3,75 | 4,58 | 5,42 | 6,25 |
| | HP | kW | H (m) | | | | | | | | | |
| **4MSHB-4/2,2** | 3 | 2,2 | 35,4 | 34,8 | 34,0 | 32,8 | 31,2 | 29,3 | 27,0 | 22,0 | 16,9 | 11,6 |
| **4MSHB-5/2,2** | 3 | 2,2 | 44,3 | 43,5 | 42,5 | 41,0 | 39,0 | 36,6 | 33,8 | 27,5 | 21,1 | 14,6 |
| **4MSHB-6/3** | 4 | 3 | 53,2 | 52,2 | 51,3 | 49,9 | 47,8 | 44,7 | 41,5 | 34,4 | 27,7 | 17,2 |
| **4MSHB-8/4** | 5,5 | 4 | 70,9 | 69,6 | 68,3 | 66,5 | 63,7 | 59,7 | 55,3 | 45,9 | 36,9 | 23,0 |

| TYPE - 50 Hz | P2 | | Q (m³/h - l/min - l/s) | | | | | | | | | | | |
|---|---|---|---|---|---|---|---|---|---|---|---|---|---|---|
| | | | 0 | 9 | 10,5 | 12 | 13,5 | 16,5 | 19,5 | 22,5 | 24 | 27 | 30 | 33 |
| | | | 0 | 150 | 175 | 200 | 225 | 275 | 325 | 375 | 400 | 450 | 500 | 550 |
| | | | 0 | 2,50 | 2,92 | 3,33 | 3,75 | 4,58 | 5,42 | 6,25 | 6,67 | 7,50 | 8,33 | 9,17 |
| | HP | kW | H (m) | | | | | | | | | | | |
| **4MSHC-3/2,2** | 3 | 2,2 | 30,2 | 30,7 | 30,5 | 30,0 | 29,4 | 27,9 | 26,2 | 24,0 | 22,8 | 20,0 | 16,7 | 12,3 |
| **4MSHC-4/3** | 4 | 3 | 40,1 | 41,0 | 40,6 | 39,9 | 39,1 | 37,3 | 35,0 | 32,0 | 30,3 | 26,9 | 23,1 | 16,4 |
| **4MSHC-5/4** | 5,5 | 4 | 50,1 | 51,3 | 50,8 | 49,9 | 48,8 | 46,6 | 43,8 | 40,0 | 37,8 | 33,0 | 27,8 | 21,0 |
| **4MSHC-6/5,5** | 7,5 | 5,5 | 60,3 | 61,7 | 61,0 | 59,9 | 58,7 | 55,9 | 52,3 | 47,7 | 45,1 | 39,6 | 33,6 | 24,6 |

| TYPE - 50 Hz | P2 | | Q (m³/h - l/min - l/s) | | | | | | | | | | | |
|---|---|---|---|---|---|---|---|---|---|---|---|---|---|---|
| | | | 0 | 13,5 | 16,5 | 19,5 | 22,5 | 24 | 27 | 30 | 33 | 39 | 45 | 48 |
| | | | 0 | 225 | 275 | 325 | 375 | 400 | 450 | 500 | 550 | 650 | 750 | 800 |
| | | | 0 | 3,75 | 4,58 | 5,42 | 6,25 | 6,67 | 7,50 | 8,33 | 9,17 | 10,83 | 12,50 | 13,33 |
| | HP | kW | H (m) | | | | | | | | | | | |
| **4MSHD-2/2,2** | 3 | 2,2 | 18,3 | 18,7 | 18,4 | 18,0 | 17,5 | 17,2 | 16,5 | 15,7 | 14,7 | 12,3 | 7,6 | |
| **4MSHD-3/3** | 4 | 3 | 27,1 | 27,7 | 27,3 | 26,7 | 26,0 | 25,6 | 24,6 | 23,5 | 22,0 | 18,4 | 14,2 | |
| **4MSHD-4/4** | 5,5 | 4 | 36,2 | 36,8 | 36,1 | 35,2 | 34,1 | 33,6 | 32,3 | 30,6 | 28,7 | 24,2 | 19,2 | |
| **4MSHD-5/5,5** | 7,5 | 5,5 | 45,2 | 46,3 | 45,4 | 44,4 | 43,2 | 42,6 | 41,0 | 39,0 | 36,6 | 30,9 | 25,3 | 22,0 |
| **4MSHD-6/7,5** | 10 | 7,5 | 54,2 | 55,5 | 54,5 | 53,2 | 51,9 | 51,1 | 49,1 | 46,8 | 43,9 | 37,0 | 30,3 | 26,0 |

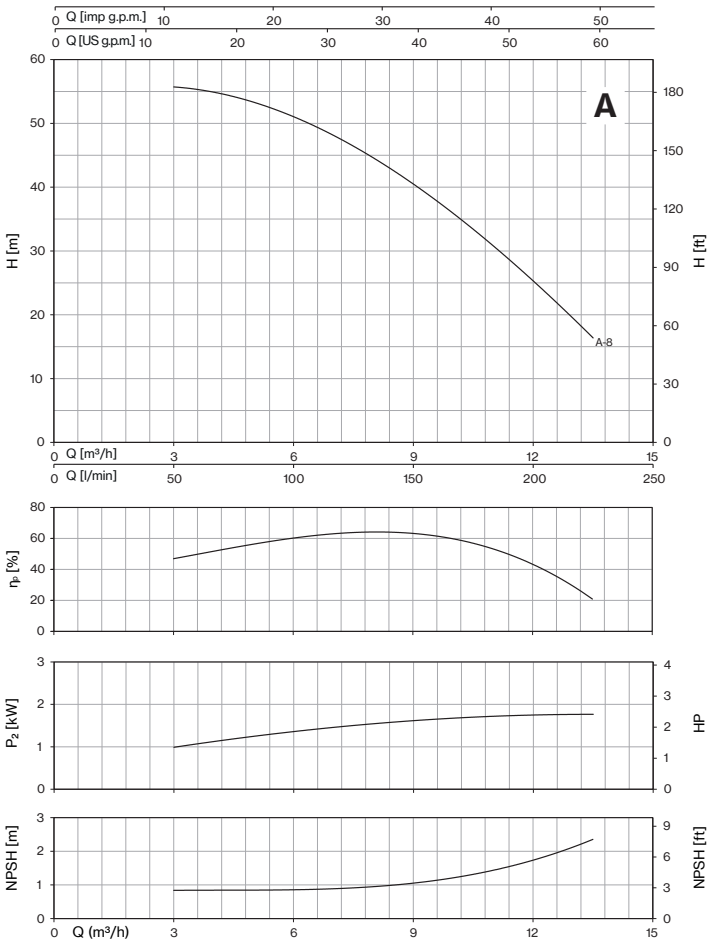
A
Q [imp g.p.m.]
Q [US g.p.m.]
H [m]
H [ft]
A-8
Q [m³/h]
Q [l/min]
ηp [%]
P2 [kW]
HP
NPSH [m]
NPSH [ft]
Q (m³/h)

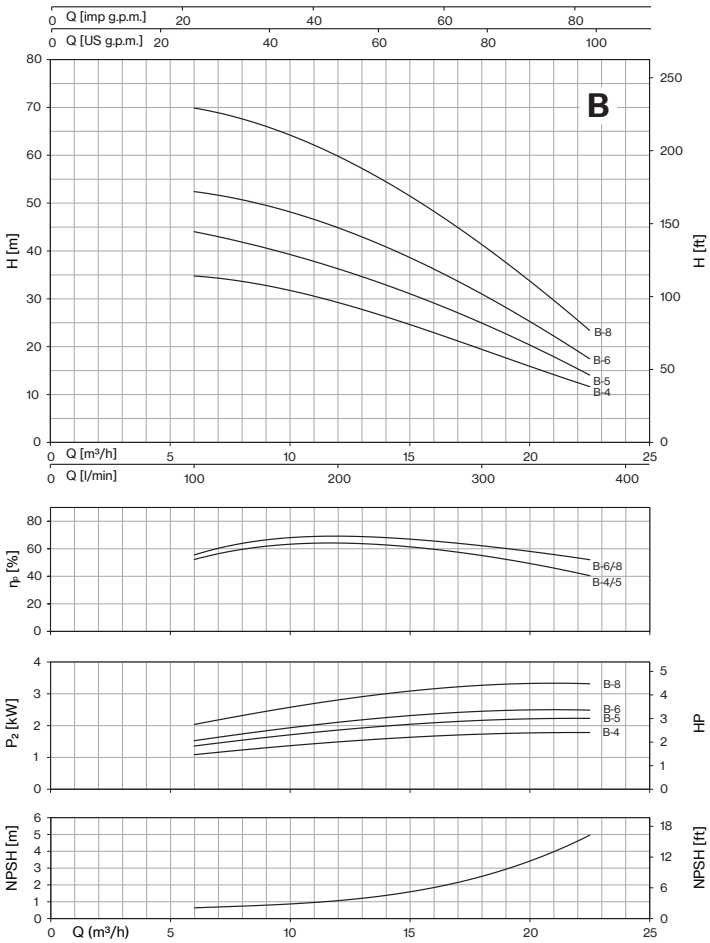
B
Q [imp g.p.m.]
Q [US g.p.m.]
H [m]
H [ft]
B-8
B-6
B-5
B-4
Q [m³/h]
Q [l/min]
ηp [%]
B-6/8
B-4/5
P2 [kW]
HP
NPSH [m]
NPSH [ft]
Q (m³/h)

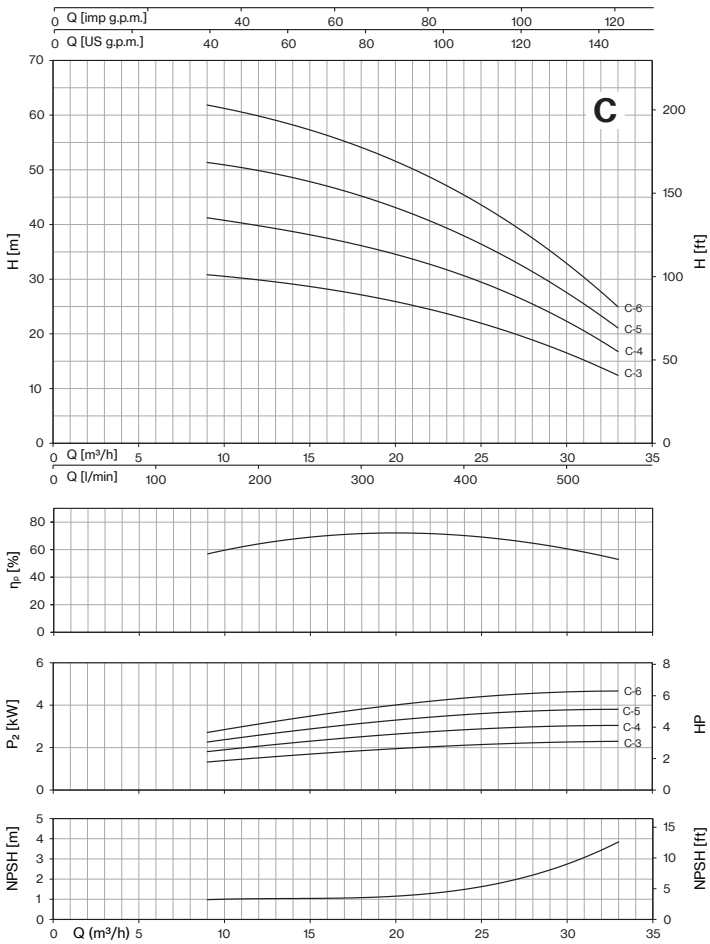
C
Q [imp g.p.m.]
Q [US g.p.m.]
H [m]
H [ft]
C-6
C-5
C-4
C-3
Q [m³/h]
Q [l/min]
ηp [%]
P2 [kW]
HP
NPSH [m]
NPSH [ft]
Q (m³/h)

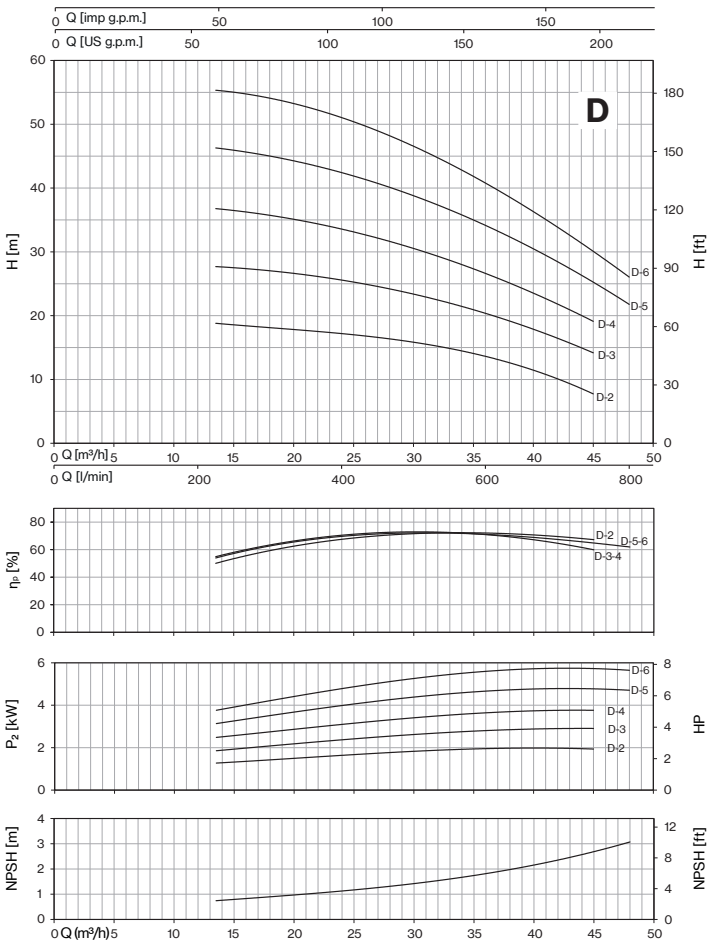
D
Q [imp g.p.m.]
Q [US g.p.m.]
H [m]
H [ft]
D-6
D-5
D-4
D-3
D-2
Q [m³/h]
Q [l/min]
ηp [%]
D-2
D-5-6
D-3-4
P2 [kW]
HP
NPSH [m]
NPSH [ft]
Q (m³/h)

# MSH-4MSH

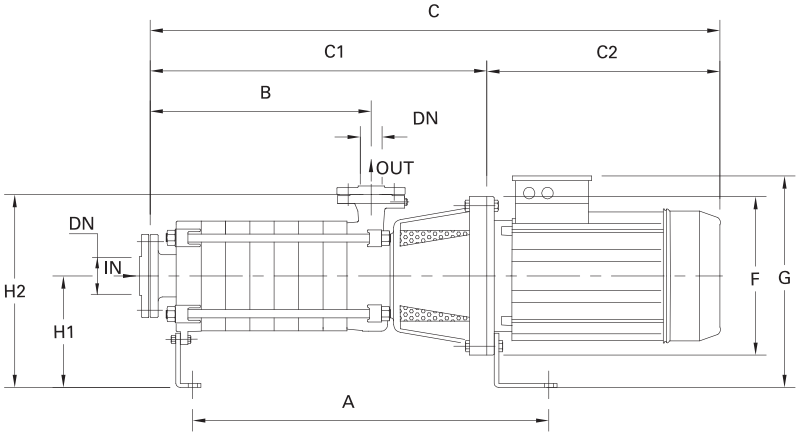


STANDARD

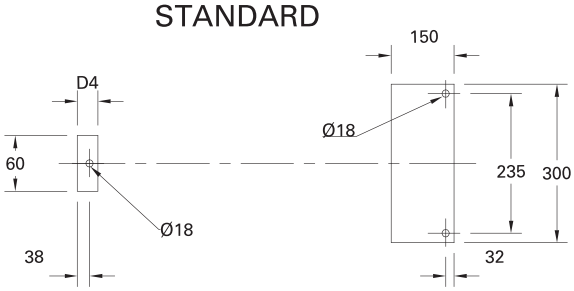


## Direction of nozzles

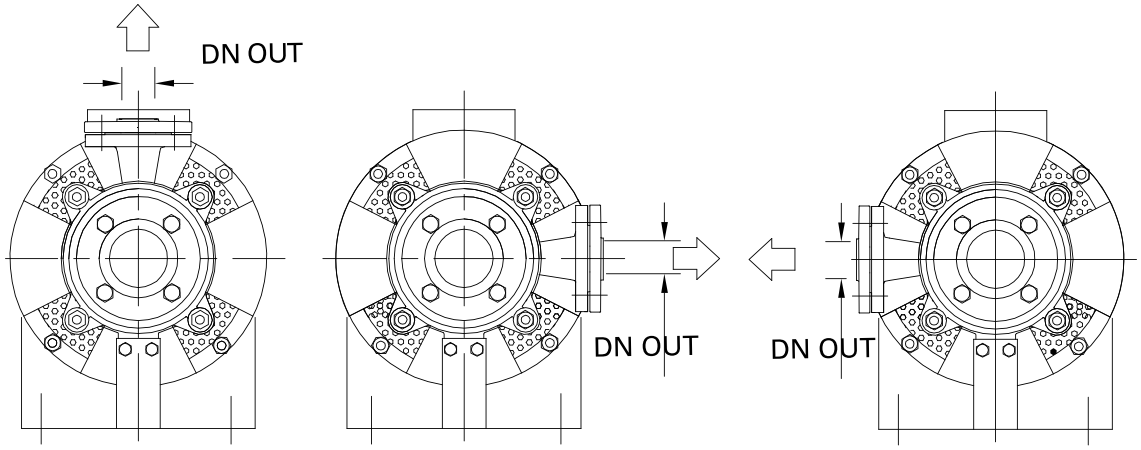


STANDARD Pos. 01 Pos. 02

| DIMENSIONS (mm) | | | | |
|---|---|---|---|---|
| DN | D | K | holes | |
| | | | n° | ø |
| 40 | 150 | 110 | 4 | 18 |
| 50 | 165 | 125 | 4 | 18 |
| 65 | 185 | 145 | 4 | 18 |
| 80 | 200 | 160 | 8 | 18 |

flanges

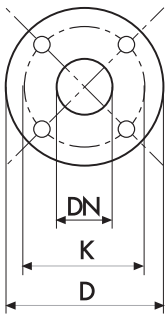

## MSH ~2900 rpm

| TYPE | DN IN | DN OUT | N. STAGE | DIMENSIONS (mm) | | | | | | | | | | | | | Kg |
|---|---|---|---|---|---|---|---|---|---|---|---|---|---|---|---|---|---|
| | | | | A | B | C | C1 | C2 | F | G | H1 | H2 | D4 | I | L | M | |
| **MSHA-3/5,5** | (UNI PN 16) 65 | (UNI PN 40) 40 | 3 | 604 | 256,5 | 922,5 | 545,5 | 377 | 300 | 425 | 245 | 420 | 70 | 1100 | 400 | 500 | 140,5 |
| **MSHA-4/7,5** | | | 4 | 655 | 307,5 | 973,5 | 596,5 | 377 | 300 | 425 | | | | 1100 | 400 | 500 | 157 |
| **MSHA-5/9,2** | | | 5 | 706 | 358,5 | 1063,5 | 647,5 | 416 | 300 | 425 | | | | 1100 | 400 | 500 | 173,5 |
| **MSHA-6/11** | | | 6 | 757 | 409,5 | 1114,5 | 698,5 | 416 | 300 | 425 | | | | 1100 | 400 | 500 | 192,5 |
| **MSHA-8/15** | | | 8 | 859 | 511,5 | 1298,5 | 800,5 | 498 | 350 | 480 | | | | 1400 | 500 | 500 | 259,5 |
| **MSHB-2/7,5** | (UNI PN 16) 65 | (UNI PN 40) 40 | 2 | 553 | 205,5 | 531,5 | 494,5 | 37 | 300 | 425 | 245 | 420 | 70 | 1100 | 400 | 500 | 137 |
| **MSHB-3R/9,2** | | | 3 | 604 | 256,5 | 961,5 | 545,5 | 416 | 300 | 425 | | | | 1100 | 400 | 500 | 154 |
| **MSHB-3/11** | | | 3 | 604 | 256,5 | 961,5 | 545,5 | 416 | 300 | 425 | | | | 1100 | 400 | 500 | 158 |
| **MSHB-4/15** | | | 4 | 655 | 307,5 | 1094,5 | 596,5 | 498 | 350 | 480 | | | | 1400 | 500 | 500 | 220,5 |
| **MSHB-5/18,5** | | | 5 | 706 | 358,5 | 1188,5 | 647,5 | 541 | 350 | 480 | | | | 1400 | 500 | 500 | 245 |
| **MSHB-6/22** | | | 6 | 757 | 409,5 | 1239,5 | 698,5 | 541 | 350 | 480 | | | | 1400 | 500 | 500 | 265 |
| **MSHC-2R1/11** | (UNI PN 16) 80 | (UNI PN 40) 50 | 2 | 596 | 243 | 954 | 538 | 416 | 300 | 425 | 245 | 445 | 60 | 1100 | 400 | 500 | 165 |
| **MSHC-3R/15** | | | 3 | 656 | 303 | 1096 | 598 | 498 | 350 | 480 | | | | 1100 | 400 | 500 | 231,5 |
| **MSHC-3/18,5** | | | 3 | 656 | 303 | 1139 | 598 | 541 | 350 | 480 | | | | 1400 | 500 | 500 | 246,5 |
| **MSHC-4R1/22** | | | 4 | 716 | 363 | 1199 | 658 | 541 | 350 | 480 | | | | 1400 | 500 | 500 | 270,5 |
| **MSHC-5/30** | | | 5 | 776 | 423 | 1286 | 718 | 568 | 350 | 495 | | | | 1400 | 500 | 500 | 319 |
| **MSHC-6/37** | | | 6 | 836 | 483 | 1386 | 778 | 608 | 350 | 495 | | | | 1400 | 500 | 500 | 358 |
| **MSHD-2/15** | (UNI PN 10) 80 | (UNI PN 40) 50 | 2 | 596 | 243 | 1036 | 538 | 498 | 350 | 480 | 245 | 445 | 60 | 1400 | 400 | 500 | 217 |
| **MSHD-3R/18,5** | | | 3 | 656 | 303 | 1139 | 598 | 541 | 350 | 480 | | | | 1400 | 500 | 500 | 245 |
| **MSHD-3/22** | | | 3 | 656 | 303 | 1139 | 598 | 541 | 350 | 480 | | | | 1400 | 500 | 500 | 255,5 |
| **MSHD-4/30** | | | 4 | 716 | 363 | 1226 | 658 | 568 | 350 | 495 | | | | 1400 | 500 | 500 | 303 |
| **MSHD-5/37** | | | 5 | 776 | 423 | 1326 | 718 | 608 | 350 | 495 | | | | 1400 | 500 | 500 | 340,5 |

## 4MSH ~1450 rpm

| TYPE | DN IN | DN OUT | N. STAGE | DIMENSIONS (mm) | | | | | | | | | | | | | Kg |
|---|---|---|---|---|---|---|---|---|---|---|---|---|---|---|---|---|---|
| | | | | A | B | C | C1 | C2 | F | G | H1 | H2 | D4 | I | L | M | |
| **4MSHA-8/2,2** | (UNI PN 16) 65 | (UNI PN 40) 40 | 8 | 822 | 511,5 | 1079 | 763,5 | 315 | 250 | 415 | 245 | 420 | 70 | 1100 | 400 | 500 | 183 |
| **4MSHB-4/2,2** | | | 4 | 618 | 511,5 | 875 | 559,5 | 315 | 250 | 415 | 245 | 420 | 70 | 1100 | 400 | 500 | 136 |
| **4MSHB-5/2,2** | | | 5 | 670 | 307,5 | 926 | 610,5 | 315 | 250 | 415 | | | | 1400 | 500 | 500 | 140 |
| **4MSHB-6/3** | | | 6 | 720 | 358,5 | 977 | 661,5 | 315 | 250 | 415 | | | | 1400 | 500 | 500 | 171 |
| **4MSHB-8/4** | | | 8 | 720 | 409,5 | 1104 | 763,5 | 340 | 250 | 438 | | | | 1400 | 500 | 500 | 200 |
| **4MSHC-3/2,2** | (UNI PN 16) 80 | (UNI PN 40) 50 | 3 | 620 | 303 | 876 | 561 | 315 | 250 | 415 | 245 | 445 | 60 | 1100 | 400 | 500 | 192 |
| **4MSHC-4/3** | | | 4 | 680 | 363 | 936 | 621 | 315 | 250 | 415 | | | | 1100 | 400 | 500 | 194 |
| **4MSHC-5/4** | | | 5 | 740 | 423 | 1021 | 681 | 340 | 250 | 438 | | | | 1100 | 400 | 500 | 202 |
| **4MSHC-6/5,5** | | | 6 | 800 | 483 | 1126 | 741 | 385 | 300 | 468 | | | | 1400 | 500 | 500 | 206 |
| **4MSHD-2/2,2** | (UNI PN 10) 80 | (UNI PN 40) 50 | 2 | 560 | 243 | 816 | 501 | 315 | 250 | 415 | 245 | 445 | 60 | 1100 | 400 | 500 | 135 |
| **4MSHD-3/3** | | | 3 | 620 | 303 | 876 | 561 | 315 | 250 | 415 | | | | 1100 | 400 | 500 | 167 |
| **4MSHD-4/4** | | | 4 | 680 | 363 | 961 | 621 | 340 | 250 | 438 | | | | 1100 | 400 | 500 | 189 |
| **4MSHD-5/5,5** | | | 5 | 740 | 423 | 1066 | 681 | 385 | 300 | 468 | | | | 1100 | 400 | 500 | 194 |
| **4MSHD-6/7,5** | | | 6 | 887 | 483 | 1166 | 741 | 425 | 300 | 468 | | | | 1400 | 500 | 500 | 218 |

# MSH-4MSH Serie-Mechanical seal and bearings

| MECHANICAL SEAL | PUMP MODEL | SHAFT Ø | | STANDARD MATERIAL | OPTIONAL |
|---|---|---|---|---|---|
| | | | | | 4 |
| | MSHA-3/5,5 \| MSHB-2/7,5 \| 4MSHA-8/2,2\| 4MSHB-4/2,2 \| 4MSHB-5/2,2 \| 4MSHB-6/3 \| 4MSHB-8/4 | 25mm | ***Rotating face***<br>***Stationary face***<br>***Elastomer*** | Ceramic<br>Graphite<br>NBR | Widia<br>Widia<br>NBR |
| | MSHC-2R1/11 \| MSHD-2/15 \| 4MSHC-3/2,2 \| 4MSHC-4/3 \| 4MSHC-5/4 \| 4MSHC-6/5,5 \| 4MSHD-2/2,2 \| 4MSHD-3/3 \| 4MSHD-4/4 \| 4MSHD-5/5,5 \| 4MSHD-6/7,5 | 35mm | ***Rotating face***<br>***Stationary face***<br>***Elastomer*** | Ceramic<br>Graphite<br>NBR | Widia<br>Widia<br>NBR |
| | MSHA-4/7,5 \| MSHA-5/9,2 \| MSHA-6/11 \| MSHA-8/15 \| MSHB-3R/9,2 \| MSHB-3/11 \| MSHB-4/15 \| MSHB-5/18,5 \| MSHB-6/22 | 25mm / Balanced seal | ***Rotating face***<br>***Stationary face***<br>***Elastomer*** | Widia<br>Graphite<br>NBR | Widia<br>Widia<br>NBR |
| | MSHC-3R/15 \| MSHC-3/18,5 \| MSHC-4R1/22 \| MSHC-5/30 \| MSHC-6/37 \| MSHD-3R/18,5 \| MSHD-3/22 \| MSHD-4/30 \| MSHD-5/37 | 35mm / Balanced seal | ***Rotating face***<br>***Stationary face***<br>***Elastomer*** | Widia<br>Graphite<br>NBR | Widia<br>Widia<br>NBR |

| BEARINGS | PUMP MODEL | TYPE | |
|---|---|---|---|
| | 4MSHA-8/2,2 \| 4MSHB-4/2,2 \| 4MSHB-5/2,2 \| 4MSHC-3/2,2 \| 4MSHD-2/2,2 | 6205-ZZ C3 | 6205-ZZ C3 |
| | 4MSHB-6/3 \| 4MSHB-8/4 \| 4MSHC-4/3 \| 4MSHC-5/4 \| 4MSHD-3/3 \| 4MSHD-4/4 | 6206-ZZ C3 | 6206-ZZ C3 |
| | MSHA-3/5,5-132S \| MSHA-4/7,5-132S \| MSHA-5/9,2-132M \| MSHA-6/11-132M \| MSHB-2/7,5-132S \| MSHB-3R/9,2-132M \| MSHB-3/11-132M \| MSHC-2R1/11-132M | 6206-ZZ C3 | 6308-ZZ C3 |
| | 4MSHC-6/5,5-132S \| 4MSHD-5/5,5-132S \| 4MSHD-6/7,5-132S | 6208-ZZ C3 | 6208-ZZ C3 |
| | MSHA-8/15-160M \| MSHB-4/15-160M \| MSHB-5/18,5-160L \| MSHB-6/22-160L \| MSHC-3R/15-160M \| MSHC-3/18,5-160L \| MSHC-4R1/22-160L \| MSHD-2/15-160M \| MSHD-3R/18,5-160L \| MSHD-3/22-160L | 6308-ZZ C3 | 6309-ZZ C3 |
| | MSHC-5/30-180M \| MSHC-6/37-180L \| MSHD-4/30-180M \| MSHD-5/37-180L | 6309-ZZ C3 | 3310-ZZ C3 |

# HP SERIES

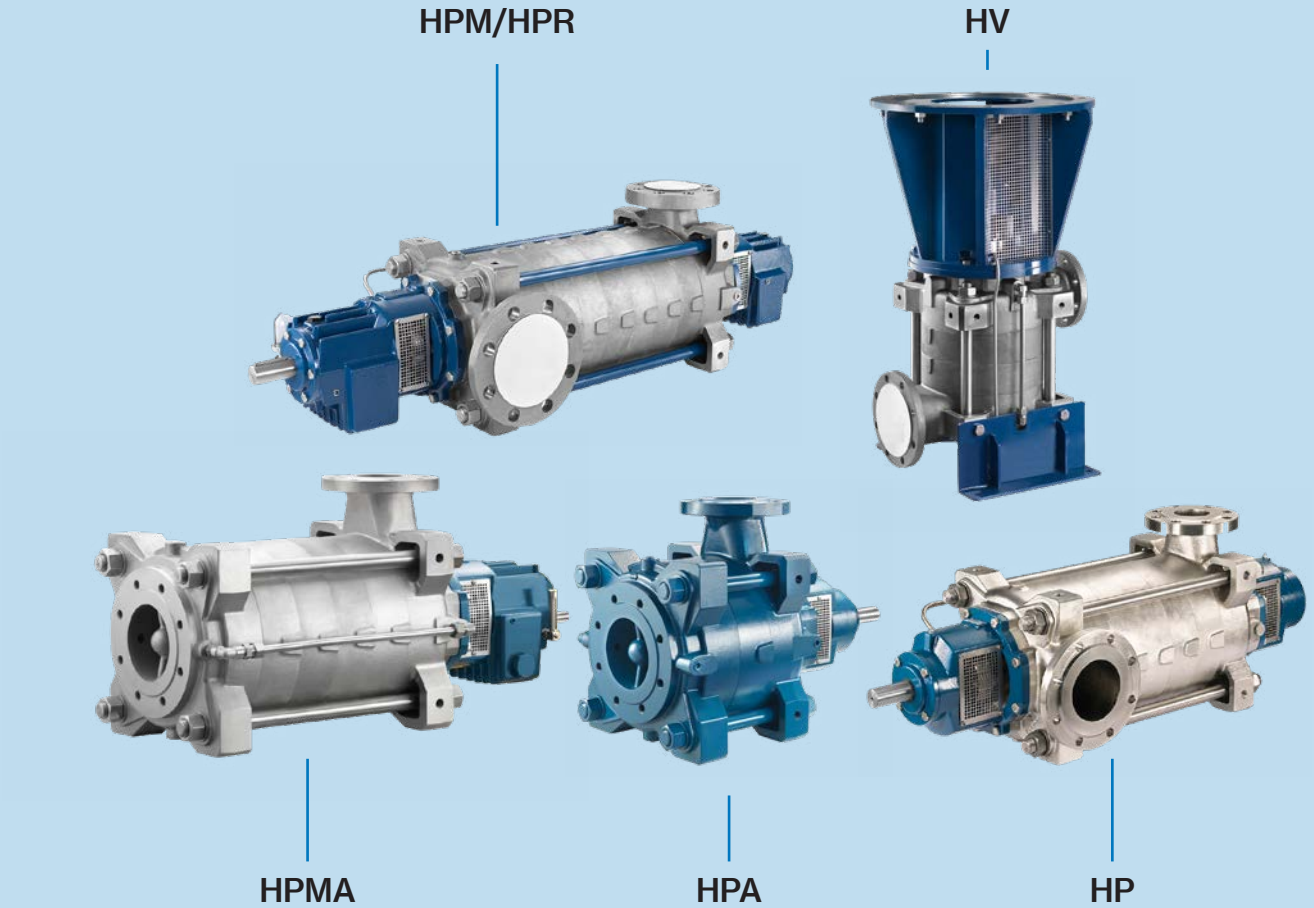


The multistage centrifugal pumps belonging to the HP series have a radial cross section, allowing an horizontal or vertical installation. The flanges of the suction and discharge ports are according to the EN or ANSI standards, these ports can operate radially and can be rotated 90°, in the HP, HPM and HPR models, or have an axial suction port for the HPA and HPMA models. This family of pumps is designed to operate in heavy duty conditions and with very high pressures (up to 100 Bar for the HPR versions) and with temperatures up to 180°C. The great choice of materials, the different kinds of sealing on the shaft and the various lubrication solutions for the pump's bearings, make this line very versatile and ideal for many uses in the industrial, energy and water processing fields.

**Applications:**

- Boiler feeding
- Water desalination by Reverse Osmosis
- Geothermal plants
- Service installations in the petrochemical sector

# PERFORMANCE RANGE

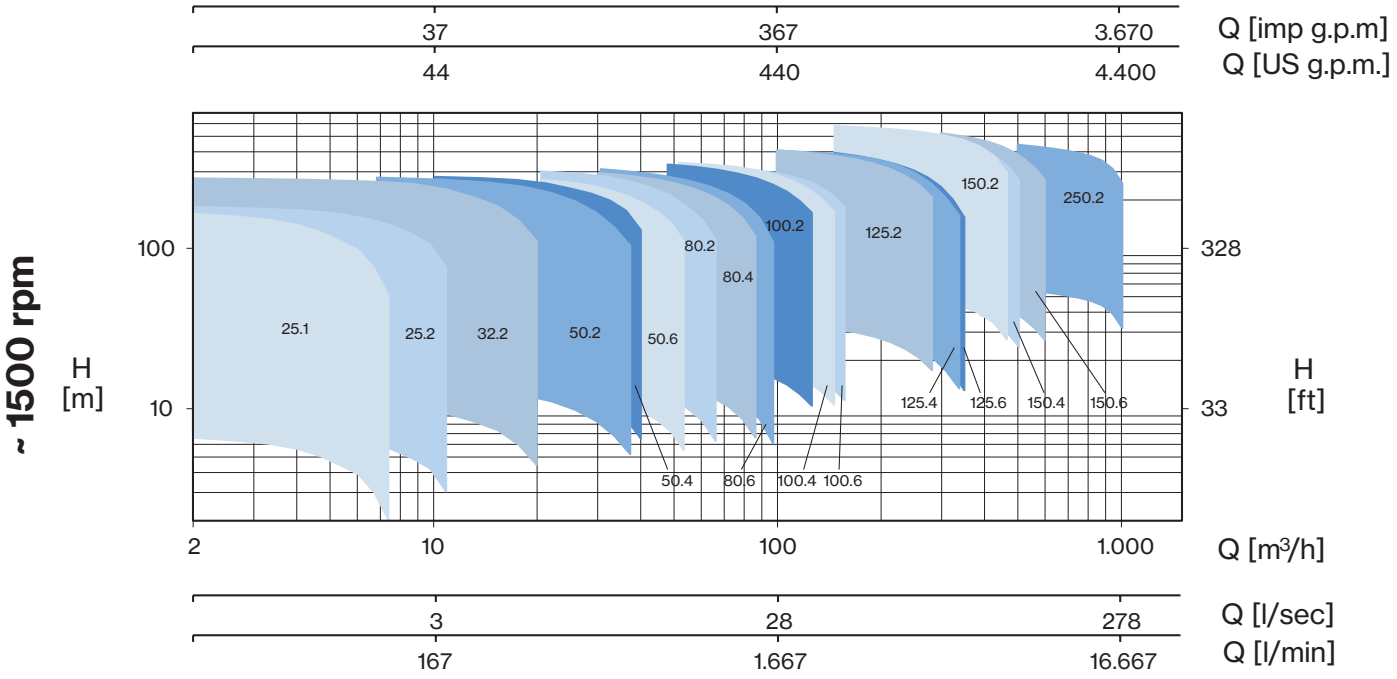


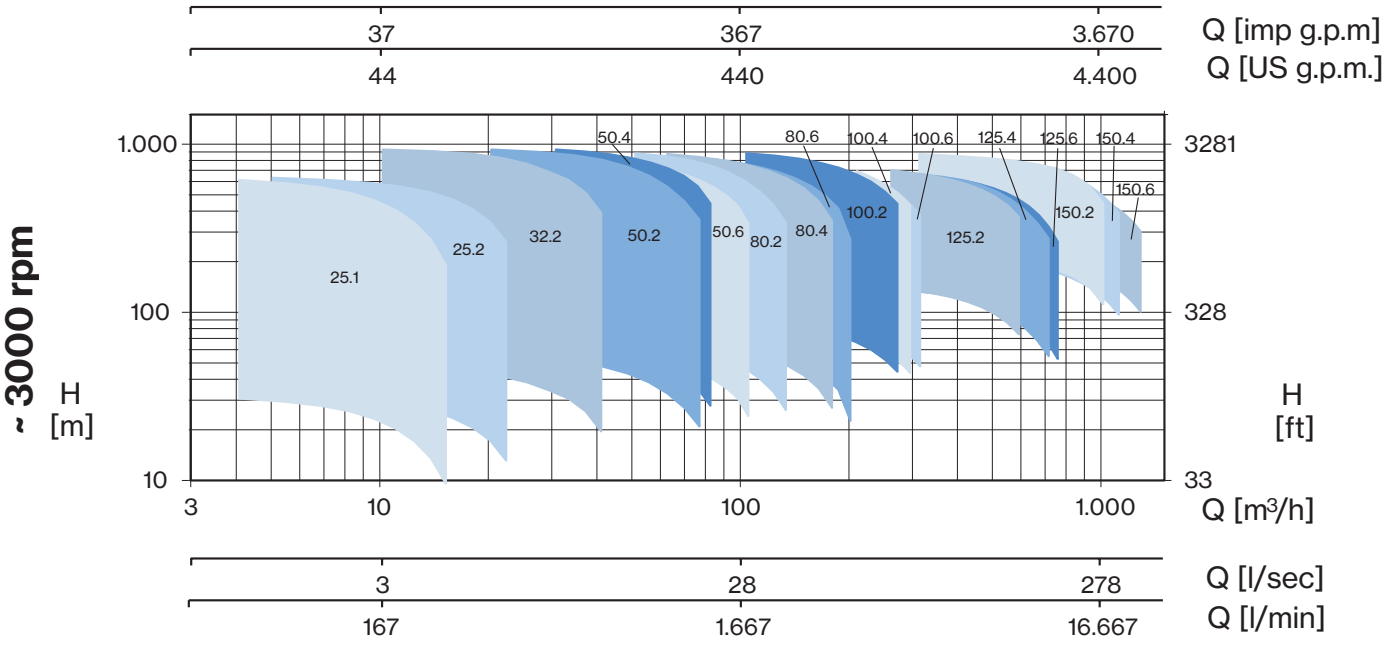

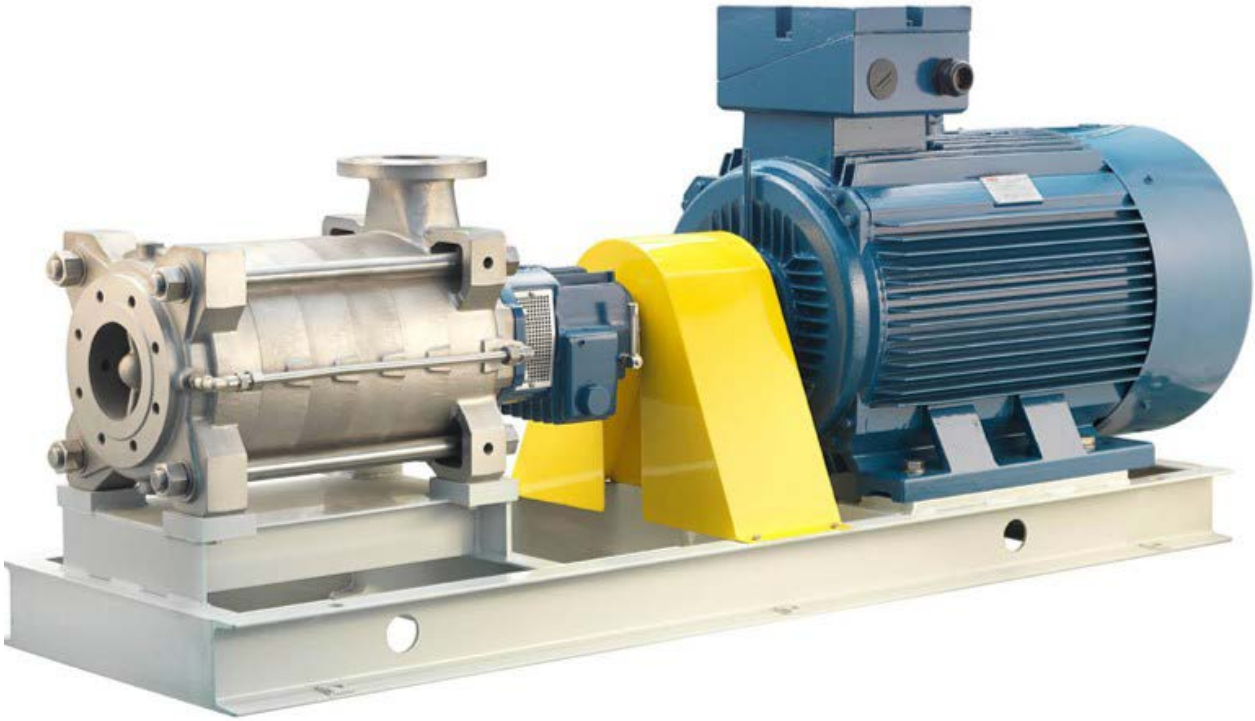

## Main characteristics

- Flow rates up to 1200 m³/h
- Pressure up to 1000 m
- High hydraulic efficiency, up to 80%
- Balancing drum, placed on the discharge casing, which effectively compensates the axial thrust produced by the impellers
- Versatile sealing system: which is available as packing, single Mechanical or Balanced Mechanical, other special types upon request
- The pumps' bearings are available with grease or oil lubrication in order to assure a long operating life
- Wear rings: they are available both fixed as well as rotating, in various materials, with hardening treatments

## General function data

- Pressure up to 100 bar
- Temperatures from -20°C to +180°C
- Rotational speed up to 3600 rpm.
- Standard flanges: UNI/EN
- Suction port: DN 40-300 - PN 16-25
- Discharge port: DN 25-250 - PN 64-100
- Performance tolerances: ISO9906-3B

# PSC

Horizontal axial split case single stage centrifugal pumps with in-line inlet and outlet. The double suction impeller design provides hydraulic balance to enhance bearing life span.

| Construction features | |
|---|---|
| **Flow rate** | up to 4000 m³/h |
| **Pressure** | up to 180 m |
| **Temperature** | from -10 °C to +110 °C |
| **Rotation** | 1450 - 2900 rpm |
| **Standard flanges** | conform to EN 1092-2/ PN 16 or PN 25 |
| **Discharge port** | DN65-350 PN 16-25 |
| **Bearing lubrification** | grease |
| **Sealing** | gland packing; also available with mechanical seal |
| **Impeller, casing and wear rings** | cast iron, also available in bronze or stainless steel |
| **Performance tolerance** | ISO 9906-3B |

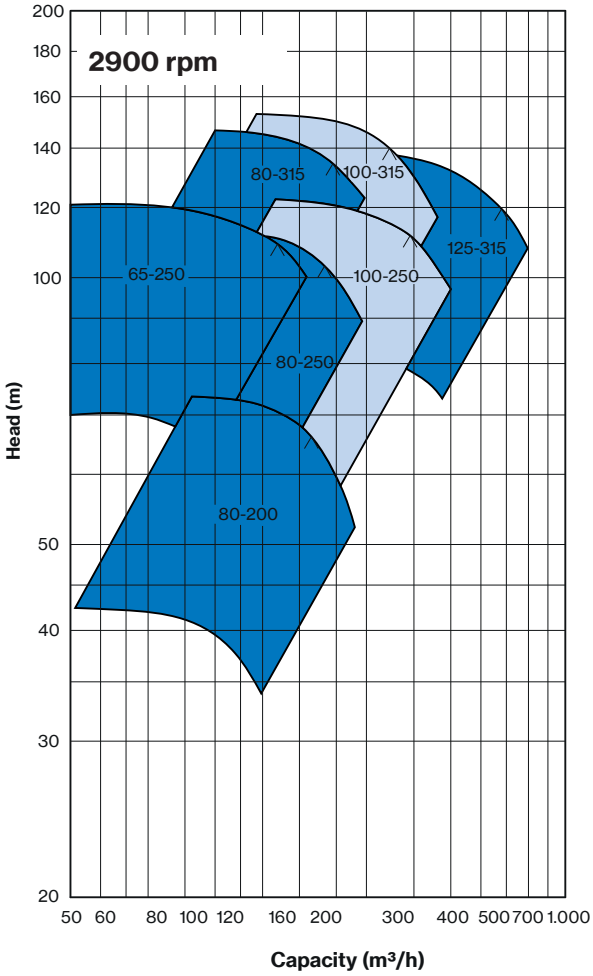
2900 rpm
Head (m)
Capacity (m³/h)
200
180
160
140
120
100
50
40
30
20
50 60 80 100 120 160 200 300 400 500 700 1.000
80-315
100-315
125-315
65-250
100-250
80-250
80-200

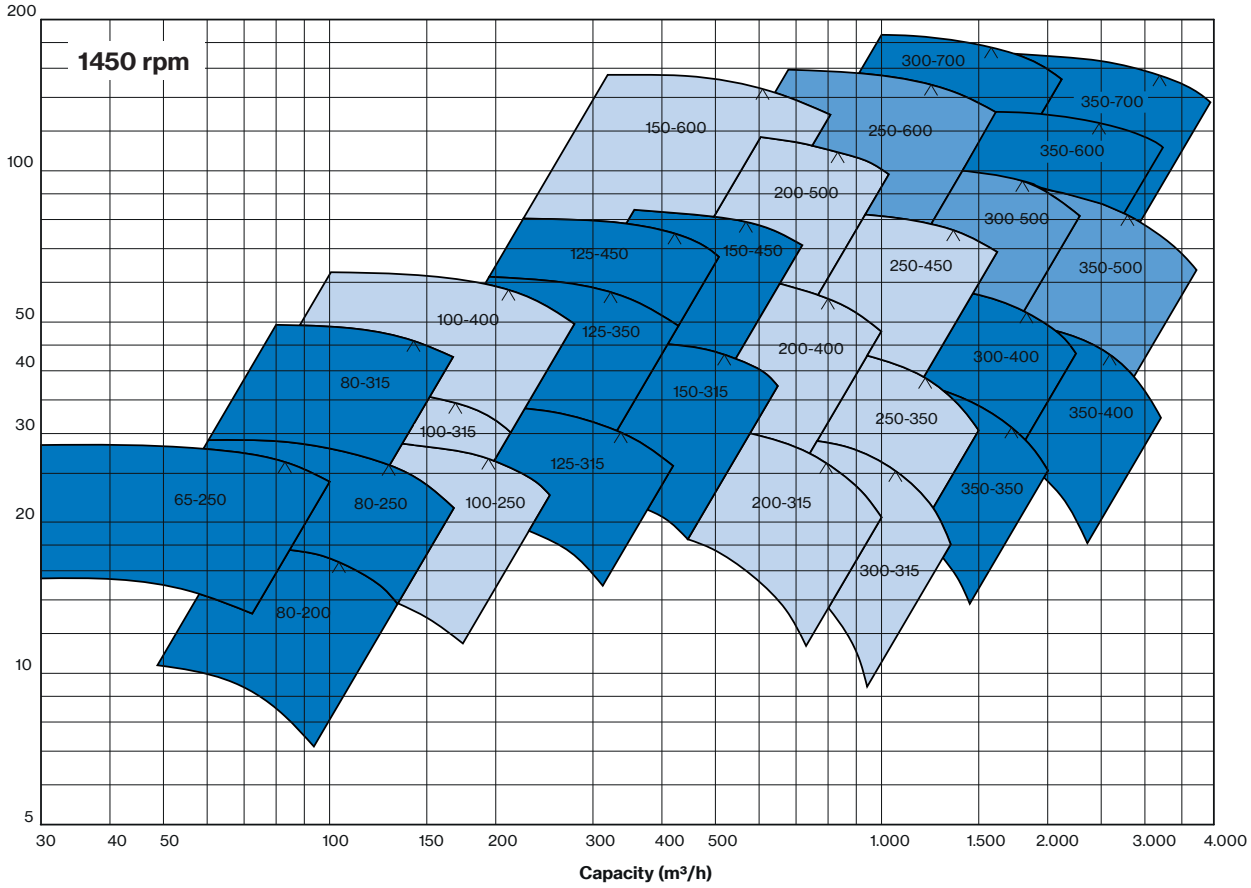
1450 rpm
Capacity (m³/h)
200
100
50
40
30
20
10
5
30 40 50 100 150 200 300 400 500 1.000 1.500 2.000 3.000 4.000
300-700
350-700
150-600
250-600
350-600
200-500
300-500
125-450
150-450
250-450
350-500
100-400
125-350
200-400
300-400
80-315
150-315
250-350
350-400
100-315
125-315
65-250
80-250
100-250
200-315
350-350
300-315
80-200

# PSC

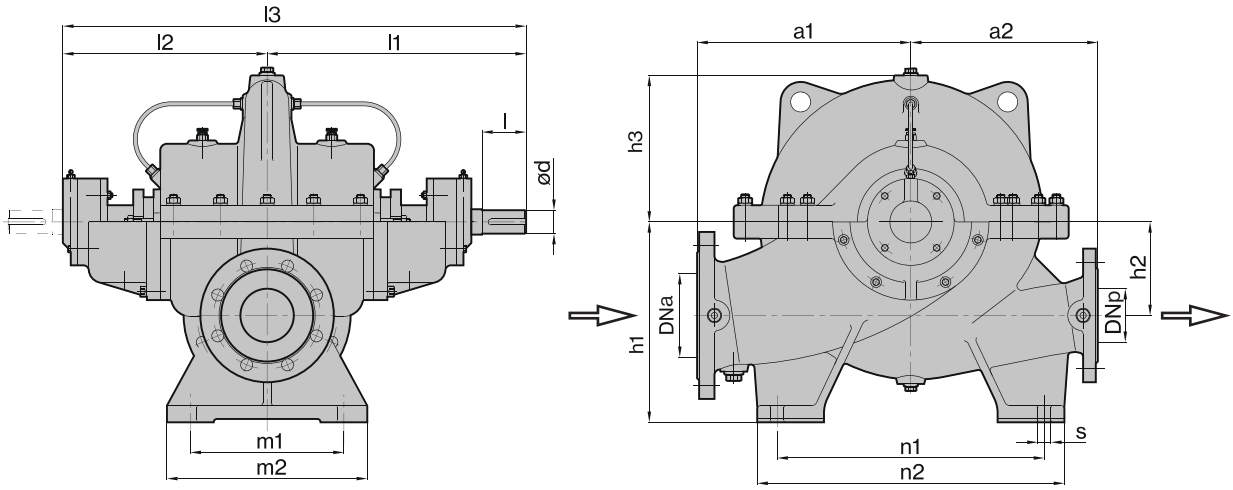


| TYPE | DIMENSIONS (mm) | | | | | | | | | | | | | | | | | | | Kg |
|---|---|---|---|---|---|---|---|---|---|---|---|---|---|---|---|---|---|---|---|---|
| | PNa | PNp | DNa | DNp | ød | l | l1 | l2 | l3 | a1 | a2 | h1 | h2 | h3 | n1 | n2 | m1 | m2 | s | |
| **65-250** | 16 | 16 | 100 | 65 | 35 | 80 | 400 | 310 | 710 | 320 | 280 | 300 | 140 | 200 | 400 | 460 | 230 | 300 | 20 | 165 |
| **80-200** | 16 | 16 | 125 | 80 | 35 | 80 | 400 | 310 | 710 | 320 | 280 | 300 | 140 | 200 | 400 | 460 | 230 | 300 | 20 | 165 |
| **80-250** | 16 | 16 | 125 | 80 | 35 | 80 | 400 | 310 | 710 | 320 | 280 | 300 | 140 | 200 | 400 | 460 | 230 | 300 | 20 | 175 |
| **80-315** | 16 | 16 | 125 | 80 | 35 | 80 | 400 | 310 | 710 | 360 | 300 | 300 | 140 | 260 | 400 | 460 | 230 | 300 | 20 | 197 |
| **100-250** | 16 | 16 | 150 | 100 | 42 | 90 | 450 | 350 | 800 | 360 | 310 | 355 | 170 | 235 | 400 | 480 | 280 | 340 | 20 | 220 |
| **100-315** | 16 | 16 | 150 | 100 | 42 | 90 | 450 | 350 | 800 | 360 | 310 | 355 | 170 | 250 | 400 | 480 | 280 | 340 | 20 | 230 |
| **100-400** | 16 | 16 | 150 | 100 | 42 | 90 | 450 | 350 | 800 | 420 | 370 | 355 | 170 | 300 | 460 | 540 | 280 | 340 | 20 | 290 |
| **125-315** | 16 | 16 | 200 | 125 | 55 | 120 | 555 | 420 | 975 | 420 | 370 | 400 | 200 | 280 | 460 | 540 | 320 | 380 | 22 | 330 |
| **125-350** | 16 | 16 | 200 | 125 | 55 | 120 | 555 | 420 | 975 | 470 | 450 | 400 | 200 | 300 | 540 | 660 | 320 | 380 | 22 | 380 |
| **125-450** | 16 | 16 | 200 | 125 | 55 | 120 | 555 | 420 | 975 | 500 | 450 | 400 | 200 | 350 | 540 | 640 | 320 | 380 | 22 | 410 |
| **150-315** | 16 | 16 | 200 | 150 | 55 | 120 | 555 | 420 | 975 | 470 | 400 | 400 | 200 | 310 | 540 | 640 | 320 | 380 | 22 | 395 |
| **150-450** | 16 | 16 | 200 | 150 | 55 | 120 | 555 | 420 | 975 | 500 | 450 | 400 | 200 | 365 | 540 | 640 | 320 | 380 | 22 | 430 |
| **150-600** | 25 | 25 | 250 | 150 | 65 | 130 | 645 | 500 | 1145 | 550 | 500 | 560 | 300 | 445 | 540 | 640 | 360 | 420 | 22 | 800 |
| **200-315** | 16 | 16 | 250 | 200 | 65 | 130 | 645 | 500 | 1145 | 500 | 450 | 500 | 240 | 315 | 540 | 640 | 360 | 420 | 22 | 570 |
| **200-400** | 16 | 16 | 250 | 200 | 65 | 130 | 645 | 500 | 1145 | 500 | 450 | 500 | 240 | 360 | 540 | 640 | 360 | 420 | 22 | 575 |
| **200-500** | 16 | 16 | 250 | 200 | 65 | 130 | 645 | 500 | 1145 | 550 | 500 | 560 | 300 | 380 | 620 | 720 | 360 | 420 | 22 | 700 |
| **250-350** | 16 | 16 | 300 | 250 | 65 | 130 | 645 | 500 | 1145 | 600 | 500 | 600 | 300 | 390 | 620 | 720 | 360 | 420 | 22 | 682 |
| **250-450** | 16 | 16 | 300 | 250 | 65 | 130 | 645 | 500 | 1145 | 600 | 500 | 600 | 300 | 415 | 620 | 720 | 360 | 420 | 22 | 780 |
| **250-600** | 25 | 25 | 300 | 250 | 80 | 170 | 720 | 540 | 1260 | 650 | 550 | 600 | 300 | 430 | 620 | 710 | 415 | 485 | 26 | 1190 |
| **300-315** | 16 | 16 | 350 | 300 | 65 | 130 | 645 | 500 | 1145 | 600 | 500 | 630 | 300 | 400 | 620 | 700 | 360 | 420 | 22 | 700 |
| **300-400** | 16 | 16 | 400 | 300 | 75 | 140 | 770 | 615 | 1385 | 700 | 550 | 710 | 350 | 450 | 720 | 800 | 420 | 520 | 26 | 1125 |
| **300-500** | 16 | 16 | 400 | 300 | 85 | 170 | 755 | 585 | 1340 | 700 | 750 | 710 | 350 | 425 | 700 | 800 | 420 | 520 | 26 | 1500 |
| **300-700** | 25 | 25 | 400 | 300 | 100 | 180 | 865 | 675 | 1540 | 750 | 800 | 710 | 350 | 470 | 720 | 880 | 420 | 520 | 26 | 1650 |
| **350-350** | 16 | 16 | 400 | 350 | 75 | 140 | 770 | 615 | 1385 | 700 | 550 | 670 | 350 | 450 | 720 | 800 | 420 | 520 | 26 | 1100 |
| **350-400** | 16 | 16 | 500 | 350 | 75 | 140 | 770 | 615 | 1385 | 800 | 600 | 800 | 380 | 500 | 800 | 960 | 500 | 600 | 26 | 1400 |
| **350-500** | 16 | 16 | 500 | 350 | 80 | 170 | 755 | 585 | 1340 | 800 | 600 | 800 | 400 | 435 | 740 | 900 | 500 | 600 | 26 | 1435 |
| **350-600** | 25 | 25 | 500 | 350 | 80 | 170 | 825 | 650 | 1475 | 800 | 600 | 800 | 400 | 510 | 800 | 900 | 500 | 600 | 26 | 1435 |
| **350-700** | 25 | 25 | 500 | 350 | 100 | 180 | 865 | 675 | 1540 | 850 | 750 | 850 | 450 | 525 | 720 | 880 | 500 | 600 | 26 | 2000 |

# VP SERIES

VP

Vertical lineshaft pumps with submerged pump bowl specifically developed for the industrial sectors, irrigation, waterworks and fire-fighting systems. Extremely versatile for the use in areas not served by electricity, as emergency or back-up units. Available in different materials and versions with drive head and electric motor or gear box for diesel engine.

**Applications:**

- Pumping units for fire-fighting systems
- Aqueducts
- Condensate extraction in power plants
- Geothermal plants
- Water treatment on Reverse Osmosis plants

# PERFORMANCE RANGE

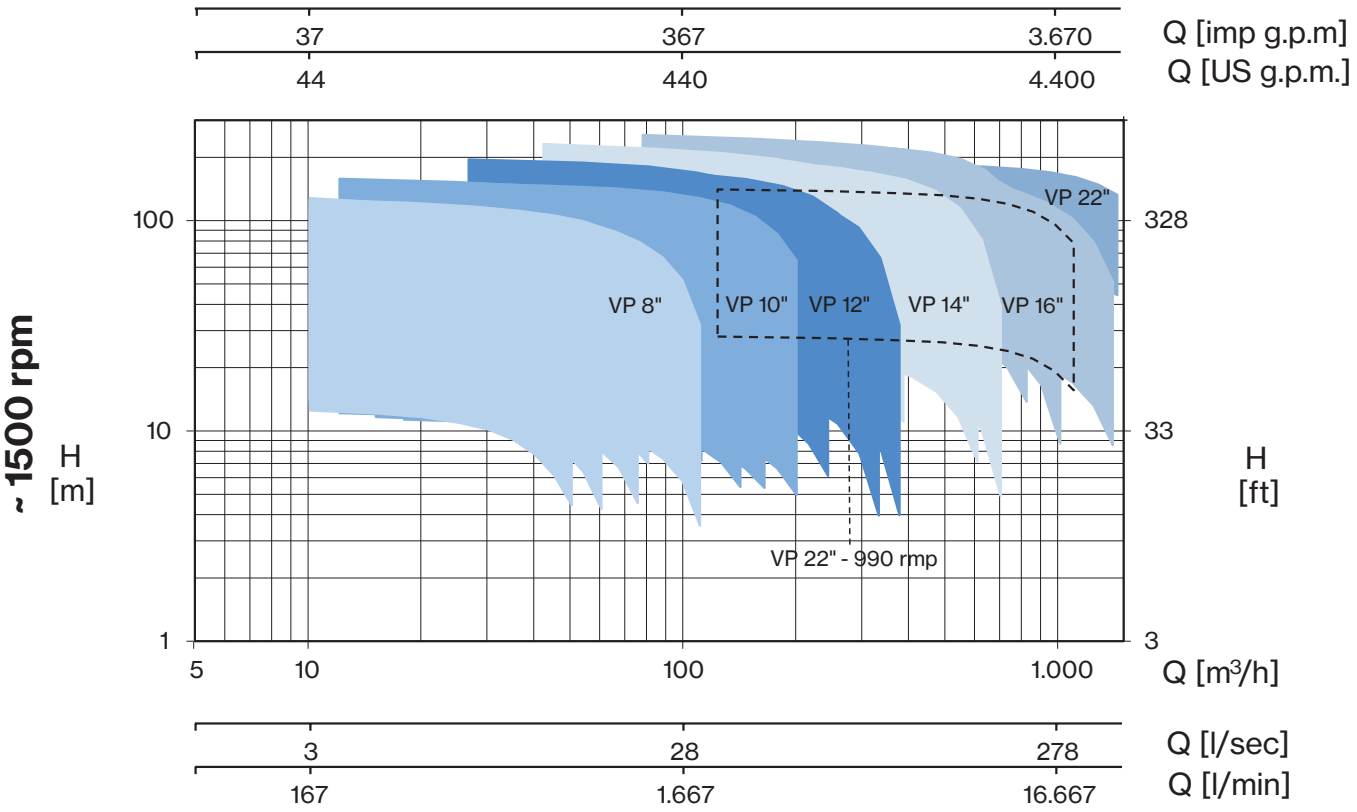


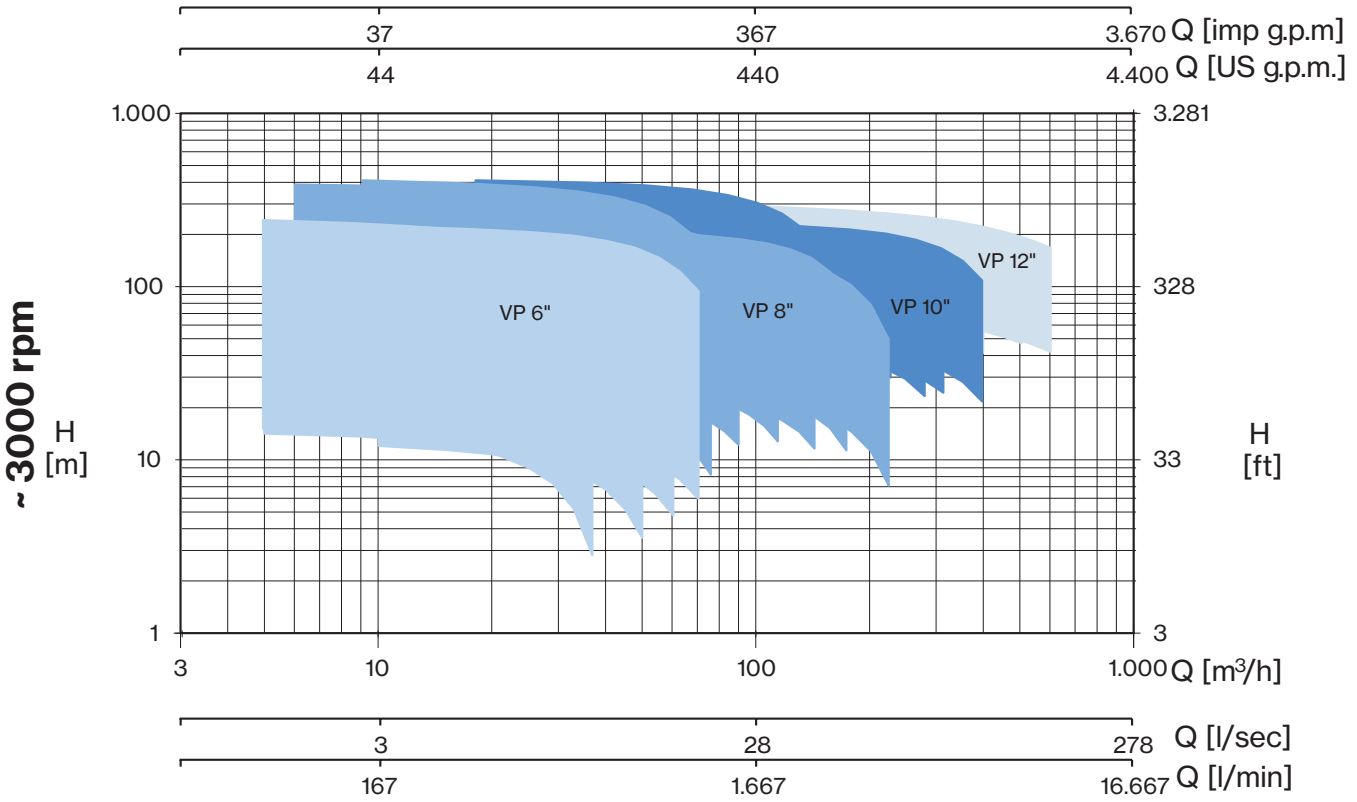

## Main characteristics

- Capacity up to 1.600 m³/h
- Pressure up to 400 m
- High hydraulic efficiency, up to 82%
- Thrust bearing (grease or oil with optional external cooling) for use of standard motors
- Axis lines with tapered joints for reliable and durable connection of the shaft
- Special bushings resistant to the wear of abrasive liquids and temperatures up to 140°C
- Control unit for electric motor, transmission angle on request
- AISI 420 stainless steel shaft for standard versions
- The pump part of VPL models is produced in the standard execution in AISI 304 stainless steel
- The pump part of VP models is produced in the standard execution in cast iron

## Technical operational specifics for standard versions

- All the hydraulic performance values below are guaranteed in accordance with standard ISO 9906-Grade 3B
- The allowable content of solids in the pumped liquid is 100 g/m3
- All the components wetted with liquid are available in various types of steel and bronze alloy

Pentax®

WATER PUMPS

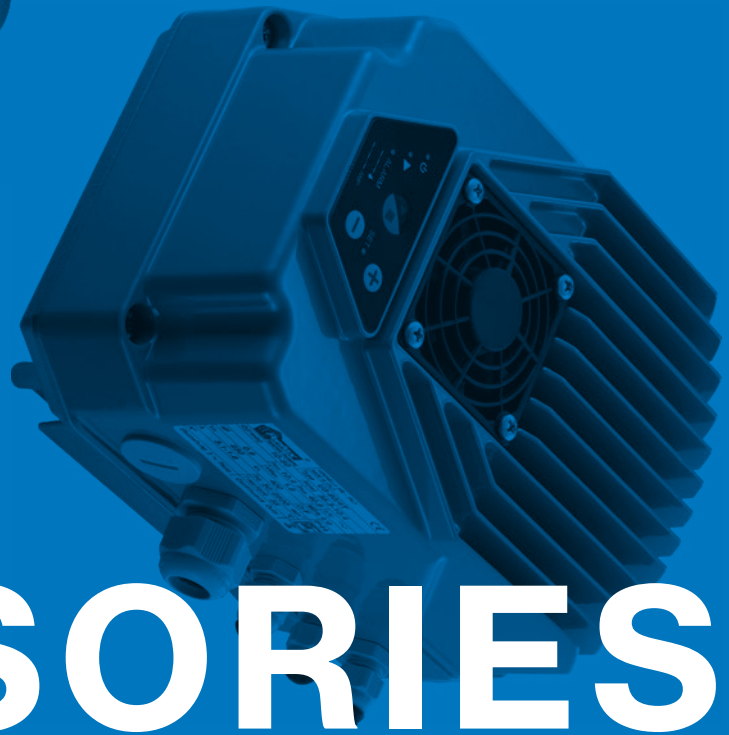

# ACCESSORIES

# ELECTRONIC FLOW CONTROL

**HIDROMATIC H2**

- Complete replacement of the traditional water system set consisting on pressure switch and pressure tank
- Control the starting of the electric pump after a pressure decrease (taps opening) and stopping when the fluid flow interrupt at the maximum pressure level of the electric pumps (taps closing)
- Protection against dry running
- Starting pressure adjustable during the installation
- Standard 1”M hydraulic connections
- Installation in any position - both vertical and horizontal according to the flow direction
- Easily replaceable electronic printed circuit board
- No need of maintenance

| TECHNICAL DATA | |
|---|---|
| **Power supply** | 110-230V ac ± 10% 50/60Hz |
| **Max rated current** | 12 A |
| **Starting pressure range** | 1 - 3,5 bar |
| **Max pressure** | 10 bar |
| **Protection degree** | IP65 |
| **Max fluid temperature** | 55 °C |
| **Max ambient temperature** | 55 °C |

**HIDROTANK H2**

- Automatic start and stop operations of single-phases electric pumps up to 2 HP
- Replacement of the traditional water system set consisting on pressure switch and pressure tank.
- Control the starting of the electric pump after a pressure decrease (taps opening) and stopping when the fluid flow interrupt at the maximum pressure level of the electric pumps (taps closing)
- Protection against dry running
- Starting pressure adjustable during the installation
- Standard 1”M hydraulic connections
- Installation in any position-both vertical and horizontal - according to the flow direction
- Easily replaceable electronic printed circuit board
- No need of maintenance
- Thanks to the 0,4 lt. tank it protects from the frequent start-stop required by small request of water and from anylosses into the system
- Protection of the electronic board thanks to the new watertight compartment
- Protection from water-hammer
- New design and new concept
- Built in 0,4 lt. tank
- Built in pressure gauge
- Watertight electronic part

| TECHNICAL DATA | |
|---|---|
| **Power supply** | 230Vac ± 15% 50/60Hz |
| **Max rated current** | 12 A (2HP) - 1500 W |
| **Starting pressure range** | 1 ÷ 3,5 bar (1,5 bar factory setting) |
| **Max pressure** | 10 bar |
| **Protection degree** | IP65 |
| **Fluid temperature** | 5°C ÷ 35 °C |
| **Ambient temperature** | 5°C ÷ 45°C |
| **Hydraulic connection** | 1” M |

# VARIABLE SPEED DRIVE

**EPIC**

EPIC is a single-phase variable speed drive for horizontal and vertical three-phase pumps, designed to maintain the set pressure and protect a pumping system against dry running, over/under voltage and overcurrent.
It is possible to realize a booster set up to 2 pumps in parallel, using 2 EPIC connected together.

- Constant pressure control
- Easy initial configuration
- Installed directly on motor terminal box of horizontal or vertical pumps
- Soft start and soft stop
- Alternance for uniform pump wearing when connected to another EPIC
- Protection against dry running (adjustable power factor cosφ), overload, overcurrent
- Automatic restart in case of stop for dry running
- Fuse for input protection of the device
- Led indicator for standby, run and alarm conditions
- Compatibility for residential environment thanks to an integrated electronic power factor corrector in compliance to EN61000-3-2
- 2 digital inputs (N.O. or N.C.) for motor run/stop
- 2 analog inputs: 4-20 mA and 0-10 VDC
- 1 digital output (N.O. or N.C.) for alarm signal

| Input rated voltage | Output rated voltage | Output rated current | Max electric pump current | Weight |
|---|---|---|---|---|
| 1 × 230 V | 3 × 230 V | 7,5 A | 6,8 A | 2,5 Kg |

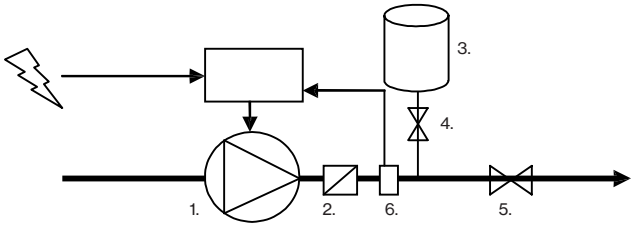


1. Pump
2. Non return valve
3. Pressure tank *(Volume suggested: 10% of the pump flow rate)*
4. Valve-Tap
5. Valve
6. Pressure sensor

| VSD | 3~ PUMP TYPE | max nominal power P2 | |
|---|---|---|---|
| | | HP | kW |
| EPIC (1~ V-in 3~ V-out) | **MPX** | 1,2 | 0,88 |
| | **INOX, CH, U 3, U 3S** | 1,5 | 1,1 |
| | **U 18S, U 18V, U 18SV, U 18L, U 18SL** | 1,8 | 1,3 |
| | **CAM, CAB, CM, MB, CB, CS 2", U 5, U 5S, U 9, U 9S, U 9V, U 9SV, U 9L, U 9SL, U 18S** | 2 | 1,5 |
| | **U 3V, U 3SV, U 3L, U 3SL, U 5V, U 5SV, U 5L, U 5SL, U7, U7 S, U 7V, U 7SV, U 7L, U 7SL** | 2,5 | 1,85 |

# VARIABLE SPEED DRIVE

EPIC-A (Advanced) is a three-phase variable speed drive for horizontal and vertical three-phase pumps designed to maintain the set pressure and protect pumping systems up to 8 pumps connected in parallel.

- Constant pressure control
- Easy initial configuration
- Simplified installation on motor terminal box of horizontal or vertical pumps
- Soft start and soft stop
- Alternance for uniform pump wearing when connected to others EPIC-A
- Built-in protections against overvoltage and undervoltage, overcurrent and no load, dry running, overtemperature
- Led indicator for standby, run and alarm conditions
- Compatibility for residential environment thanks to an integrated electronic power factor corrector in compliance to EN61000-3-2
- Integrated input filter for category C2 (EN61800-3), class A (EN55011)
- 4 digital inputs (N.O. or N.C.) for motor run/stop
- 4 analog inputs: two 4-20 mA and two 0-10 VDC
- 2 digital outputs (N.O. or N.C.) for alarm signal

| EPIC-A | 304 | 306 | 309 |
|---|---|---|---|
| **Installation** | direct on-pump | | |
| **Input rated voltage** | 3 × 400 V ± 15% | | |
| **Output rated voltage** | 3 × 400 V | | |
| **Output rated current** | 4 A | 6 A | 9 A |
| **Max electric pump current** | 3,6 A | 5,4 A | 8,1 A |

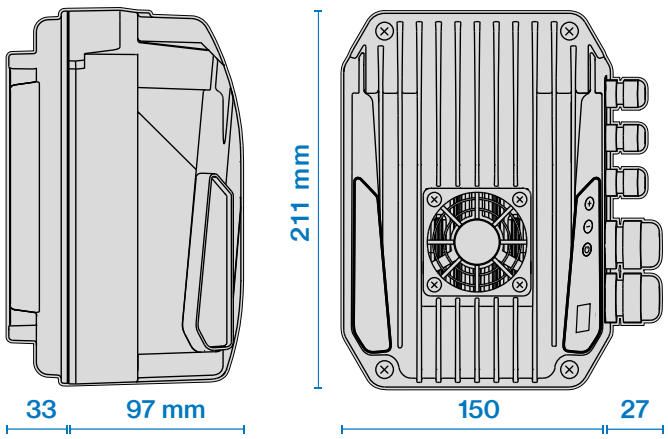


**max weight 2,5 kg**

IPFC 109-311 | IPFC 314-330 | IPFC 338-385

IPFC is a variable speed drive for vertical pumps designed to control and protect pumping systems up to 8 pumps connected in parallel.
IPFC maintains the set pressure ensuring energy savings and extended lifespan of the system.

- Constant pressure control
- Energy and cost saving
- Protection against overload and dry running
- Greater reliability and longevity of pumping system
- Installed directly on the motor fan cover of vertical pumps
- Indication of input current and supply voltage
- Soft start and soft stop
- Recording running hours and loggings errors and alarms reported by the system
- Connect to other devices to get combined operation with cascade control and pump alteration
- OLED display
- Settable digital outputs, N.O. or N.C.
- Protection and analog/digital inputs

| IPFC | 109 | 114 | 306 | 309 | 311 | 314 | 318 | 325 | 330 | 338 | 348 | 365 | 375 | 385 |
|---|---|---|---|---|---|---|---|---|---|---|---|---|---|---|
| **Input rated voltage (V)** | 1 × 230 ± 15% | | 3 x 400 ± 15% | | | | | | | | | | | |
| **Output rated voltage (V)** | 1 × 230<br>3 × 230 | | 3 x 400 | | | | | | | | | | | |
| **Output rated current (A)** | (1~) 9<br>(3~) 7 | (1~) 9<br>(3~) 11 | (3~) 6 | (3~) 9 | (3~) 11 | (3~) 14 | (3~) 18 | (3~) 25 | (3~) 30 | (3~) 38 | (3~) 48 | (3~) 65 | (3~) 75 | (3~) 85 |
| **Output rated power (kW)** | (1~) 1,1<br>(3~) 1,5 | (1~) 1,1<br>(3~) 3 | (3~) 2,2 | (3~) 4 | (3~) 4 | (3~) 5,5 | (3~) 7,5 | (3~) 11 | (3~) 15 | (3~) 18,5 | (3~) 22 | (3~) 30 | (3~) 37 | (3~) 45 |
| **Max electric pump current (A)** | (1~) 7,2<br>(3~) 6,3 | (1~) 7,2<br>(3~) 9,9 | (3~) 5,4 | (3~) 8,1 | (3~) 9,9 | (3~) 12,6 | (3~) 16,2 | (3~) 22,5 | (3~) 27 | (3~) 34,2 | (3~) 43,2 | (3~) 58,5 | (3~) 67,5 | (3~) 76,5 |
| **Input frequency (Hz)** | 50 - 60 | | | | | | | | | | | | | |
| **PWM frequency (kHz)** | 2,5 - 4 - 6 - 8 - 10 - 12 | | | | | | | | | | | | | |
| **Control panel** | backlight LCD with 2 x 16 characters and buzer / Bluetooth ® SMART 4,0 | | | | | | | | | | | | | |
| **Input analogical signals (mA)** | no.4 4-20 | | | | | | | | | | | | | |
| **Input digital signals** | no.2 | | | | | | | | | | | | | |
| **Comunication** | RS485 / Bluetooth SMART 4,0 | | | | | | | | | | | | | |
| **2 DOL auxiliary pump contacts** | clean, N.O., 230 V, Imax, 6 A | | | | | | | | | | | | | |
| **Cooling** | auxiliar built-in cooling fan /mot fan | | | | | | | | | | | | | |
| **Protection degree** | IP55 (IP54 for IPFC 338 < > IPFC 385) | | | | | | | | | | | | | |
| **Assembly** | on motor fan cover with kit / hanged on wall with kit | | | | | | | | | on motor feet / hanged on wall with kit | | | | |
| **Max ambient temperature (C)** | 40° C | | | | | | | | | | | | | |
| **Max ambient altitude** | 1000 m slm / de-rate 2% each 100 m | | | | | | | | | | | | | |
| **Input / Output feeding cable** | 2 × PG 13,5 + 3 × PG 9 | | | | | | | | | | | | | |
| **Dimension (mm)** | 205 × 205 × h180 | | | | | 260 × 260 × h180 | | | | 410 × 260 × h680 | | | | |

SPD pressure transducer

| TYPE | Output signal | Input voltage | Working pressure | Maximum pressure |
|---|---|---|---|---|
| **SPD** | 4... 20 mA | 9... 28 V | 0 - 16 bar<br>0 - 25 bar | 32 bar |

# UNYCONNECT

Dedicated APP for control and programming of Aquadomus and variable speed drives EPIC-A and IPFC

## APP FUNCTIONALITY

- **Monitor**: monitoring several operative parameters. Obtaining energy consumption statistics and check alarm history

- **Program**: create programs, save them in the archive, copy them to other devices and share them among multiple users

- **Archive**: create reports with the ability to insert notes, images and send them by e-mail or keep them in the digital archive

- **Remote**: remotely control an Aquadomus, or other pumps equipped with EPIC-A or IPFC inverters, via Wi-Fi or GSM by using a nearby smartphone as a modem

- **Manuals**: access manuals and supplementary technical documentation

- **Guide**: receive online assitance on parameters and alarms

Available on the Google Play

Download on the App Store

# PROTECTION/CONTROL PANEL

## Legend

| SERIES | ELECTRICITY SUPPLY | | N. PUMPS | | | PUMP TYPE | | | POWER P2 | SPEED | | MOTOR STARTER | | | | FEATURE | | |
|---|---|---|---|---|---|---|---|---|---|---|---|---|---|---|---|---|---|---|
| | 1~ | 3~ | 1 | 2 | 3 | Borehole | Submersible | Surface | Kw | Fixed | Variable | DOL | Y/Δ | Soft start | Impedance start | Swicth with overload protection | Electromechanical control panel | Electronic control panel |
| **PML** | ■ | - | ■ | - | - | ■ | - | ■ | 0,37 ÷ 2,2 | ■ | - | ■ | - | - | - | ■ | - | - |
| **PMLD** | ■ | - | ■ | - | - | - | ■ | - | 1,1 ÷ 1,5 | ■ | - | ■ | - | - | - | ■ | - | - |
| **PT** | | ■ | ■ | - | - | ■ | ■ | ■ | 0,37 ÷ 15 | ■ | - | ■ | - | - | - | ■ | - | - |
| **EQSM** | ■ | - | ■ | - | - | ■ | ■ | ■ | 0,37 ÷ 2,2 | ■ | - | ■ | - | - | - | - | - | ■ |
| **EQSMT** | - | ■ | ■ | - | - | ■ | ■ | ■ | 0,55 ÷ 15 | ■ | - | ■ | - | - | - | - | - | ■ |
| **QST** | - | ■ | ■ | - | - | ■ | ■ | ■ | 4,5 ÷ 220 | ■ | - | - | ■ | - | - | - | ■ | - |
| **QSS** | - | ■ | ■ | - | - | ■ | - | ■ | 7,5 ÷ 220 | ■ | - | - | - | ■ | - | - | ■ | - |
| **QRS** | - | ■ | ■ | - | - | ■ | - | - | 4,5 ÷ 220 | ■ | - | - | - | - | ■ | - | ■ | - |
| **EQ2SM** | ■ | - | - | ■ | - | ■ | ■ | ■ | 0,37 ÷ 15 | ■ | - | ■ | - | - | - | - | - | ■ |
| **EQ2SMT** | - | ■ | - | ■ | - | ■ | ■ | ■ | 0,55 ÷ 15 | ■ | - | ■ | - | - | - | - | - | ■ |
| **Q2ST** | - | ■ | - | ■ | - | ■ | ■ | ■ | 4,5 ÷ 220 | ■ | - | | ■ | - | - | - | ■ | - |
| **EQ3SM** | ■ | - | - | - | ■ | ■ | ■ | ■ | 0,37 ÷ 2,2 | ■ | - | ■ | - | - | - | - | - | ■ |
| **EQ3SMT** | - | ■ | - | - | ■ | ■ | ■ | ■ | 0,55 ÷ 15 | ■ | - | ■ | - | - | - | - | - | ■ |

## Overload protection unit for 1 single-phase pump with run capacitor

PML 5÷50 PML 70

- Power supply 1x230V-50/60Hz
- Electrical switch
- Run capacitor
- Externally resettable thermal relay
- Illuminated 0-1 main switch
- IP55 rated thermoplastic enclosure
- Outputs with cable gland

| TYPE | A | RUN CAPACITOR (μF) | POWER | |
|---|---|---|---|---|
| | | | HP | kW |
| **PML 5/20-4** | 4 | 20 | 0,5 | 0,37 |
| **PML 7/25-6** | 5,4 | 25 | 0,75 | 0,55 |
| **PML 10/35-7** | 6,5 | 35 | 1 | 0,75 |
| **PML 15/40-10** | 9 | 40 | 1,5 | 1,1 |
| **PML 20/50-13** | 12,1 | 50 | 2 | 1,5 |
| **PML 30/70-18** | 16,1 | 70 | 3 | 2,2 |

# PROTECTION/CONTROL PANEL

## Overload protection unit for 1 single-phase pump with run capacitor + start capacitor with disjunctor

PMLD

- Power supply 1x230V-50/60Hz
- ON/OFF switch
- Electrical switch
- Run + start capacitor with disjunctor
- Externally resettable thermal relay
- Green illuminated main switch
- IP55 rated thermoplastic enclosure
- Outputs with cable gland

| TYPE | A | RUN CAPACITOR (µF) | START CAPACITOR (µF) | POWER | |
|---|---|---|---|---|---|
| | | | | HP | kW |
| **PMLD 15-35-13** | 13 | 35 | 80 | 1,5 | 1,1 |
| **PMLD 20/50-15** | 15 | 50 | 80 | 2 | 1,5 |

## Overload protection unit for 1 three-phase pump

PT

- Power supply 3x400V-50/60Hz
- ON/OFF switch
- Protective device with thermal relay for motor overload or phase failure
- Thermoplastic enclosure
- IP55 protection level

| TYPE | A | POWER | |
|---|---|---|---|
| | | HP | kW |
| **PT 5/0,9-1,3** | 0,9-1,3 | 0,5 | 0,37 |
| **PT 7/1,3-2,1** | 1,3-2,1 | 0,75 | 0,55 |
| **PT 10/1,9-3** | 1,9-3 | 1 | 0,75 |
| **PT 15-20/2,9-4,5** | 2,9-4,5 | 1,5-2 | 1,1-1,5 |
| **PT 20-30-40/4,3-6,8** | 4,3-6,8 | 2-3-4 | 2,2-3 |
| **PT 40-50/5,7-9,1** | 5,7-9,1 | 4-5,5 | 3-4 |
| **PT 55-75/8,6-13,5** | 8,6-13,5 | 5,5-7,5 | 4-5,5 |
| **PT 100/12,5-16,5** | 12,5-16,5 | 10 | 7,5 |
| **PT 125-150-16-21** | 16-21 | 12,5-15 | 9,2-11 |
| **PT 200/22-29** | 22-29 | 20 | 15 |

## Electronic control panel for 1-2-3 pumps with direct start-up

**APPLICATIONS**

- √ PRESSURISATION
- √ FILLING
- √ EMPTYNG
- √ DRAINAGE

**EQSM**

| TYPE | VERSION | PUMPS N. | A | POWER | | WEIGHT (Kg) |
|---|---|---|---|---|---|---|
| | | | | HP | kW | |
| **EQSM** | 1~ | 1 | 0-18 | 0,5-3 | 0,37-2,2 | 1,5 |
| **EQSMT 10** | 3~ | 1 | 0-18 | 0,75-10 | 0,55-7,5 | 2,3 |
| **EQSMT 15** | 3~ | 1 | 16-25 | 10-15 | 7,5-11 | 2,5 |
| **EQSMT 20** | 3~ | 1 | 16-32 | 15-20 | 11-15 | 3 |
| **EQ2SM** | 1~ | 2 | 0-18 | 0,5-3 | 0,37-2,2 | 1,5 |
| **EQ2SMT 10** | 3~ | 2 | 0-16 | 0,75-10 | 0,55-7,5 | 2,5 |
| **EQ2SMT 15** | 3~ | 2 | 16-25 | 10-15 | 7,5-11 | 3 |
| **EQ2SMT 20** | 3~ | 2 | 16-32 | 15-20 | 11-15 | 3,5 |
| **EQ3SM** | 1~ | 3 | 0-18 | 0,5-3 | 0,37-2,2 | 5 |
| **EQ3SMT 10** | 3~ | 3 | 0-18 | 0,75-10 | 0,55-7,5 | 15 |
| **EQ3SMT 15** | 3~ | 3 | 16-25 | 10-15 | 7,5-11 | 15 |
| **EQ3SMT 20** | 3~ | 3 | 16-32 | 15-20 | 11-15 | 15 |

- Single-phase version 100-240Vac 50/60Hz
- Three-phase version 310-450Vac 50/60Hz
- LCD display for voltage, current, power factor, hours of operation, number of starts, motor status, alarms, analogue signal and thresholds
- AUTOMATIC - 0 - MANUAL operation buttons
- Voltage and current minimum and maximum electronic control, failure or incorrect phase sequence control on power supply input
- Programmable anti-seize autotest
- Dry running protection through level probes/ floats/ pressure switches and minimum current
- Up to 6 control inputs: floats/pressure switches
- Input for 4-20 mA or 0-10V analogue signal
- Analogue signal cm - m - bar
- Emergency start and stop inputs with analogue signal
- Clickson thermal pad inputs with automatic reset
- Inversion of inputs (from normally open to normally closed)
- Activation delay from mains return
- Manual button operation (fixed or pulse)
- Programmable alarms for voltage, levels, motor overload, minimum motor current, clicson, output contacts, starts/hour
- Automatic reset for minimum current alarm with 4 programmable times
- Auxiliary and motor protection fuses, isolator protection, duty standby protection
- ABS box IP55. Metallic box IP55 for EQ3SMT
- Duty-standby and motor changeover in the case of a fault for two-pump and three-pump control panels
- Predisposition for capacitors for single-phase versions (capacitors are available separately)

**CAPACITOR FOR EQSM**

| RUN CAPACITOR | POWER |
|---|---|
| | HP |
| 20μF | 0,5 |
| 25μF | 0,75 |
| 35μF | 1-1,5 |
| 40μF | 1,5 |
| 50μF | 2 |
| 80μF | 3 |

| RUN CAPACITOR + START CAPACITOR WITH DISJUNCTOR | POWER |
|---|---|
| | HP |
| 35μF + 80μF | 1,5 |
| 50μF + 80μF | 2 |

# PROTECTION/CONTROL PANEL

## Star/delta control panel for 1 three-phase pump

QST

- Power supply 3x400V-50/60Hz
- 24V transformer for auxiliary circuit
- Low voltage inputs and circuits
- Blue mains supply LED
- Green motor running LED
- Red motor overload alarm LED
- Star/delta line contactors in AC3
- Auxiliary and motor protective devices with fuses
- Main door interlock switch disconnector
- ABS box up to 11kW, metal box from 15kW

| TYPE | A | POWER | |
|---|---|---|---|
| | | HP | kW |
| **QST 5** | 13 | 5,5 | 4 |
| **QST 7** | 15 | 7,5 | 5,5 |
| **QST 10** | 17 | 10 | 7,5 |
| **QST 15** | 24 | 15 | 11 |
| **QST 20** | 31 | 20 | 15 |
| **QST 25** | 38 | 25 | 18,5 |
| **QST 30** | 50 | 30 | 22 |
| **QST 40** | 60 | 40 | 30 |
| **QST 50** | 75 | 50 | 37 |
| **QST 60** | 100 | 60 | 45 |
| **QST 75** | 124 | 75 | 55 |
| **QST 100** | 135 | 100 | 75 |
| **QST 125** | 155 | 125 | 92 |
| **QST 150** | 200 | 150 | 110 |
| **QST 180** | 241 | 180 | 132 |
| **QST 220** | 300 | 220 | 162 |
| **QST 300** | 410 | 300 | 220 |

## Star/delta control panel for 2 three-phase pumps

Q2ST

- Power supply 3x400V-50/60Hz
- 24V transformer for auxiliary circuit
- Low voltage inputs and circuits
- Blue mains supply LED
- Green motor running LED
- Red motor overload alarm LED
- Star/delta line contactors in AC3
- Auxiliary and motor protective devices with fuses
- Main door interlock switch disconnector
- Metal box (whole range)

| TYPE | A | POWER | |
|---|---|---|---|
| | | HP | kW |
| **Q2ST 3** | 8,5 | 3 | 2,2 |
| **Q2ST 5** | 13 | 5,5 | 4 |
| **Q2ST 7** | 15 | 7,5 | 5,5 |
| **Q2ST 10** | 17 | 10 | 7,5 |
| **Q2ST 15** | 24 | 15 | 11 |
| **Q2ST 20** | 31 | 20 | 15 |
| **Q2ST 25** | 38 | 25 | 18,5 |
| **Q2ST 30** | 50 | 30 | 22 |
| **Q2ST 40** | 60 | 40 | 30 |
| **Q2ST 50** | 75 | 50 | 37 |
| **Q2ST 60** | 100 | 60 | 45 |
| **Q2ST 75** | 124 | 75 | 55 |
| **Q2ST 100** | 135 | 100 | 75 |
| **Q2ST 125** | 155 | 125 | 92 |
| **Q2ST 150** | 200 | 150 | 110 |
| **Q2ST 180** | 241 | 180 | 132 |
| **Q2ST 220** | 300 | 220 | 162 |
| **Q2ST 300** | 410 | 300 | 220 |

## Soft start control panel for 1 three-phase pump

QSS

- Power supply 3x400V-50/60Hz
- Blue mains supply LED
- Green motor running LED
- Red motor overload alarm LED
- NA input for start control
- Auxiliary motor protective devices with fuse
- Main door interlock switch disconnector
- Forced ventilation kit
- IP54 rated metal box
- Ambient temperature -5 ÷ +40°C

| TYPE | A | POWER | |
|---|---|---|---|
| | | HP | kW |
| **QSS 10** | 18 | 10 | 7,5 |
| **QSS 15** | 25 | 15 | 11 |
| **QSS 20** | 30 | 20 | 15 |
| **QSS 25** | 37 | 25 | 18,5 |
| **QSS 30** | 45 | 30 | 22 |
| **QSS 40** | 60 | 40 | 30 |
| **QSS 50** | 72 | 50 | 37 |
| **QSS 60** | 85 | 60 | 45 |
| **QSS 75** | 105 | 75 | 55 |
| **QSS 80** | 125 | 80 | 59 |
| **QSS 100** | 142 | 100 | 75 |
| **QSS 125** | 170 | 125 | 92 |
| **QSS 150** | 210 | 150 | 110 |
| **QSS 180** | 250 | 180 | 132 |
| **QSS 220** | 300 | 220 | 162 |
| **QSS 300** | 370 | 300 | 220 |

## Control panel with impedance start for 1 three-phase pump

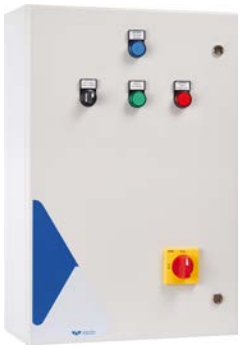

QRS

- Power supply 3x400V-50/60Hz
- Blue mains supply LED
- Green motor running LED
- Red motor overload alarm LED
- NA input for start control
- Stator reactance with 4 starts/hour, 2 of which are consecutive
- Adjustable reactance timer
- Line and impedance starter contactors in AC3
- Main door interlock switch disconnector
- Ambient temperature -5 ÷ +40°C

| TYPE | A | POWER | |
|---|---|---|---|
| | | HP | kW |
| **QRS 5** | 13 | 5,5 | 4 |
| **QRS 7** | 16 | 7,5 | 5,5 |
| **QRS 10** | 20 | 10 | 7,5 |
| **QRS 15** | 29 | 15 | 11 |
| **QRS 20** | 35 | 20 | 15 |
| **QRS 25** | 52 | 25 | 18,5 |
| **QRS 30** | 63 | 30 | 22 |
| **QRS 40** | 80 | 40 | 30 |
| **QRS 50** | 90 | 50 | 37 |
| **QRS 60** | 110 | 60 | 45 |
| **QRS 75** | 135 | 75 | 55 |
| **QRS 90** | 150 | 90 | 66 |
| **QRS 100** | 175 | 100 | 75 |
| **QRS 125** | 200 | 125 | 92 |
| **QRS 150** | 235 | 150 | 110 |
| **QRS 180** | 310 | 180 | 132 |
| **QRS 220** | 360 | 220 | 162 |
| **QRS 300** | 410 | 300 | 220 |

# TANKS

### UTILIZATION

Interchangeable membrane expansion tanks; the pre-charge pressure in the tank guarantees a water reserve but also reduces the number of startups of the connected pump; the membranes are certified for use with foodstuffs; they may be in EPDM or butyl depending on the model.

### CONSTRUCTION FEATURES

Flanges in galvanised steel or AISI 304 stainless steel.
Tanks in carbon steel coated with powder paint or in AISI 304 stainless steel.
Pre-charge valve with protective cover.

| TYPE | DESCRIPTION |
|---|---|
| **AS 24** | 24 lt. Spherical tank |
| **ACV 24** | 24 lt. Horizontal tank |
| **ACZ 24** | 24 lt. Horizontal tank |
| **ACA 24 SS** | 24 lt. Stainless steeel tank |
| **AC 50** | 50 lt. Horizontal tank |
| **AC 60** | 60 lt. Horizontal tank |
| **AC 80** | 80 lt. Horizontal tank |
| **AC 100** | 100 lt. Horizontal tank |
| **AC 200** | 200 lt. Horizontal tank |
| **AC 300** | 300 lt. Horizontal tank |
| **AV 50** | 50 lt. Vertical tank |
| **AV 60** | 60 lt. Vertical tank |
| **AV 80** | 80 lt. Vertical tank |
| **AV 100** | 100 lt. Vertical tank |
| **AV 200** | 200 lt. Vertical tank |
| **AV 300** | 300 lt. Vertical tank |
| **AV 500** | 500 lt. Vertical tank |
| **AV 750** | 750 lt. Vertical tank |
| **AV 1000** | 1000 lt. Vertical tank |

# MEMBRANES

| TYPE | DESCRIPTION |
|---|---|
| **MZ 24** | EPDM membrane for ACZ 24 lt. |
| **M 24** | membrane for AS 24 - ACV 24 |
| **M 50** | membrane for AC 50 - AV 50 |
| **M 100** | membrane for AC 100 - AV 100 |
| **M 200** | membrane for AC 200 - AV 200 |
| **M 300** | membrane for AC 300 - AV 300 |
| **M 500** | membrane for AV 500 |
| **M 750 - 2000** | membrane for AV 750 - AV 2000 |

# PRESSURE SWITCHES

| TYPE | DESCRIPTION | RANGE AT RISING PRESSURE (bar) |
|---|---|---|
| **PP5** | 1~ / 3~ | 1-5 |
| **PP12** | 1~ / 3~ | 3-12 |

# PRESSURE GAUGES

| TYPE | PHASE |
|---|---|
| **PR 6** | 0-6 bar rear connection |
| **PR 6 R** | 0-6 bar radial connection |
| **PR 12** | 0-12 bar rear connection |
| **PR 10 G** | 0-10 bar glycerine |
| **PR 12 G** | 0-12 bar glycerine |

# FLEXIBLE HOSES

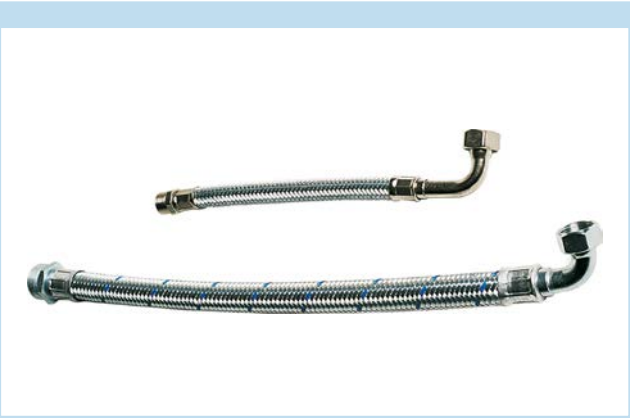

| TYPE | DESCRIPTION |
|---|---|
| **FL 530** | Flexible hose with bend 1”x530x1” |
| **FL 600** | Flexible hose with bend 1”x600x1” |
| **FL 700** | Flexible hose with bend 1”x700x1” |
| **FL 850** | Flexible hose with bend 1”x850x1” |

# CONNECTORS

| TYPE | DESCRIPTION |
|---|---|
| **R3** | 3 way 1” brass connector |
| **R5** | 5 way 1” brass connector |

| TYPE | DESCRIPTION |
|---|---|
| **R5X 1”** | 5 way 1” Aisi 304 connector with built-in no return valve |
| **R5X 1”1/4** | 5 way 1” ¼ Aisi 304 connector with built-in no return valve |
| **R5X 1”1/2** | 5 way 1” ½ Aisi 304 connector with built-in no return valve |

# VALVES

| TYPE | DESCRIPTION |
|---|---|
| **VF 1”** | foot valve 1” |
| **VF 1” ¼** | foot valve 1” ¼ |
| **VF 1”½** | foot valve 1” ½ |
| **VF 2”** | foot valve 1” ½ |
| **VR1”** | check valve 1” |
| **VR 1”¼** | check valve 1” ¼ |
| **VR 1”½** | check valve 1” ½ |
| **VR 2”** | check valve 1” |

# FLOAT SWITCHES

| TYPE | DESCRIPTION |
|---|---|
| **GK 2** | 2 mt. cable length |
| **GK 3** | 3 mt. cable length |
| **GK 5** | 5 mt. cable length |
| **GK 10** | 10 mt. cable length |
| **GAS 5** | 5 mt. cable length, for wastewater |
| **GAS 10** | 10 mt. cable length, for wastewater |
| **GAS 20** | 20 mt. cable length, for wastewater |

# CABLES JOINTS

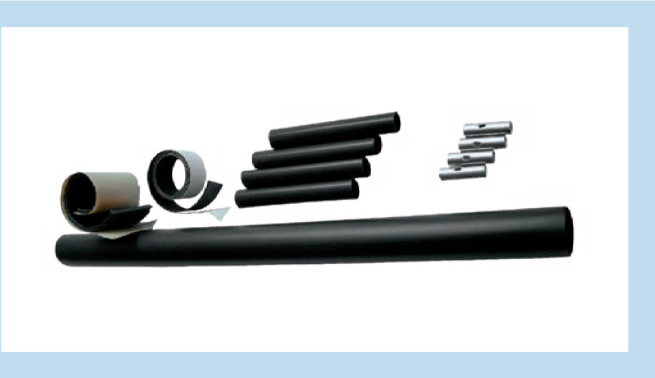

**Kit GC series**
Junction cable kit with heat - shrinkable tubing.
For a professionally made junction it is recommended to use the “Kit GC”, it has excellent requirements in terms of electric, mechanical and water resistance. This kit is composed of: crimp wire connectors in tinplated copper, thin wall heat-shrinkable tubing to cover the conductor of the cable, a strip of Scotch 2547, one of Scotchfil and medium wall heat-shrinkable tubing to cover the junction. It is recommended to seal the two end points of the sheath with a PVC textured insulating tape.

| TYPE | Cables section mm² | Cable number |
|---|---|---|
| **Kit GC 4/2,5** | 1/2,5 | 4 |
| **Kit GC 4/6** | 4/6 | 4 |
| **Kit GC 4/10** | 10 | 4 |
| **Kit GC 4/16** | 16 | 4 |
| **Kit GC 4/25** | 25 | 4 |
| **Kit GC 4/35** | 35 | 4 |
| **Kit GC 4/50** | 50 | 4 |
| **Kit GC 1/50** | 50 | 1 |
| **Kit GC 1/70** | 70 | 1 |
| **Kit GC 1/95** | 95 | 1 |
| **Kit GC 1/120** | 120 | 1 |
| **Kit GC 1/150** | 150 | 1 |

# LEVEL PROBES

**Kit K3SL series**
Level Probes Kit consist of 3 electrodes model K3SL.
Single pole probe used for level control in wells or storage tanks.
It made of an AISI 303 stainless steel electrode, a plastic (PPOX) holder and a cable gland.
A seal ring and the tightening of the cable gland PG7 prevent water from entering the cable terminal connector and causing its oxidation.
Cable connection: screw.
The external cable diameter must be 2.5 to 6mm/Ø0.1 to 0.24” to warrant perfect sealing.

Maximum connection cable section: 2.5mm2.
Maximum operating temperature: +60°C.

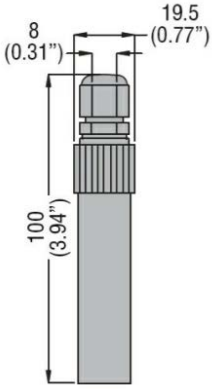

Pentax®

WATER PUMPS

# GENERAL SALES CONDITIONS

**ART. 1 - DEFINITIONS**

For the purpose of this Contract, the following expressions shall bear the respective meaning set forth below:

a) Seller/Producer: means "PENTAX INDUSTRIES SPA";
b) Purchaser: means "natural or legal person who purchases the Seller's goods in business activities";
c) Product/s or Good/s: means "standard product and products which are personalized for the Purchaser, produced and/or sold by the Seller, such as: electric pumps, pumps, and accessories;"
d) Contract and/or General Sales Conditions: means "the present contract;
e) Orders or Request of quotation means "the written request from the Purchaser to buy the Products from the Seller";
f) Order Confirmation: means "the Order acceptance document from the Seller";
g) Party/Parties: means "Seller and/or Purchaser";
h) Technical assistance for installation of Products means "The Seller's assistance through its operators who will travel to the Site, to support the Purchaser's staff by transferring technical notions about ways to install the Products. The Operators will not provide the direct installation of the Products on the Site;
i) Site or Worksite: means "the place of installation of Products";
j) Operator/s: means "the owners of the company, employees and collaborator of the Seller who can go to the Site for Technical assistance for installation of Products.
k) Business day/Business days: means the days from Monday to Friday of each week, excluding Saturdays, Sundays, and public holidays as listed in the official calendar of national holidays in Italy, as well as any company closure days notified in writing by the Seller with at least 8 (eight) days' prior notice. If a contractual deadline falls on a day that is not considered a Business Day, such deadline shall be deemed extended to the next following Business Day.
l) Days: means calendar days, as opposed to Business Days as defined under letter k) above.

**ART. 2 – CONTENT AND FORM OF THE CONTRACT**

2.1 Replacement of previous agreements and application of present Contract to future sales. The present General Sales Conditions regulate the relationship between the Parties, replace any previous agreement or document signed and apply to all the purchases which will take place between the Parties even if not expressly referred to in subsequent reports, and prevail on the general Conditions of purchase of the Purchaser.

2.2 Modification of the General Sales Conditions. Every modification of the present General Sales conditions shall be expressly confirmed in writing by the Seller.

2.3 Binding Orders. Orders shall be considered binding only when:(i) they are accepted or confirmed in writing by the Seller's legal representative or by a person expressly authorized by the Seller, through the issuance of an Order Confirmation; and (ii) the Order Confirmation is signed by the Purchaser or, alternatively, if 2 (two) Business days have passed since its transmission to the Purchaser without any objections or responses being raised by the latter. The Order becomes irrevocable the moment the Seller has knowledge of it.

2.4 Refusal of Orders. Without prejudice to its own rights, the Seller reserves the right to refuse the Orders if not completed or to block the deliveries of the Products if the Purchaser does not carry out its obligations.

2.5 Modifications and suspension of Contract. If the Purchaser modifies or suspends the Contract, the Seller has the right to terminate the Contract and ask for damage compensation, or to increase the agreed price. It is understood that the Seller shall under no circumstances be obligated to reduce the previously agreed price.

2.6 Order Procedure. The Purchaser sends the Order or the Request of quotation to the Seller in writing. The Seller may send a quotation/offer and subsequently issue the Order confirmation.

2.7 Communication of Wrong Order Confirmations. Should the Purchaser find an error and/or omission of any kind in the Order confirmation, he shall within 2 (two) Business days communicate such circumstances to the Seller, to allow him to check the Order Confirmation and to make the necessary corrections or changes.

2.8. Modifications and improvement to the Products. The Seller reserves the right to modify the Products compared to what is outlined in the related offer and/or Order Confirmation, when such modifications are necessary and/or appropriate due to technical and/or production needs or are mandatory under applicable law governing the Contract, provided that they do not reduce and/or alter the performance and/or quality characteristics of the Products agreed upon between the Parties (by way of example and not limitation: variation of materials, accessories, finishes, color shades, etc.). In the event of modifications and/or improvements, the Seller commits to notifying the Purchaser, who shall not be entitled to terminate the Contract for such reasons.

2.9 Mandatory rules of country of Site. In case the country of the Site for the supply of the Products requests the enforcement of mandatory rules, the Purchaser shall be responsible for communicating to the Seller, the relevant regulations in English, before signing the Order Confirmation. Failure to communicate the above-mentioned regulations, the Purchaser shall not be liable in any way or for any reason for the non-compliance of such regulations.

**ART. 3 – PAYMENT CONDITIONS**

3.1 Price. The price of the Products shall be indicated in the Order Confirmation.

3.2. Currency. The amounts in the Confirmation Order shall be indicated by the Seller in Euro or in US Dollars (USD).

3.3 Payment conditions. The payment conditions shall be specified in the Order Confirmation, and the Purchaser undertakes to pay by the deadlines indicated in the Order Confirmation, or as otherwise agreed by the Parties.

3.4 Late Payments. If the payments are late, default interest is applied as indicated in D.Lgs 231/2002, as well as bank charges and financing costs incurred by the Seller because of late payment.

3.5 Obligation to pay in case of postponement request of delivery and/or Site is unsuitable to receive Goods. If the Purchaser asks for the postponement of the delivery date of the Goods as indicated in art. 5.2, the Seller has the right to ask the Purchaser for the balance of the price payment and a compensation for the deposit of the Goods at its own site or at a third party's site for its whole duration, with prior written communication to the Purchaser. With the sending of the request of the payment of the price balance, the Purchaser shall be considered as having received formal notice in accordance with the law. The costs and risks of transportation of Goods for their deposit at a third subject's shall be entirely borne by the Purchaser and shall be paid when the invoice is presented. Within the end of every month or at another due date at its discretion, the Seller shall issue an invoice to the Purchaser for the payment of the deposit costs.

3.6 Revision of prices in case of Purchaser's request to modify measurements and/or the Contract. In case the Purchaser requests modification to measurements of Goods in accordance with art. 4.3, or modifications of the Contract (by way of example and not limited to: request for extra Goods, change of material type, color variations, etc..), the Seller shall have the right to a revision of an increased price. The price agreed between the Parties shall not be in any case reduced. In case of non-acceptance of modifications by the Seller, the Purchaser shall pay the entire agreed price.

3.7 Clause limiting the pro position of exceptions. The Purchaser cannot avoid payment of owed amount, as there is a clause expressly called the clause "solve et repete", indicated in article 1462 of the Italian Civil Code.

3.8 Travel allowance. The Seller shall have the right to ask the Purchaser for a travel allowance and a reimbursement of any additional costs to those indicated in the Order Confirmation, as better described in art. 5.5.

**ART. 4 – DELIVERY AND PASSING OF RISK**

4.1 Delivery date. The delivery date is indicated in the Order Confirmation, the Seller is not liable for any delays in the delivery of Products, determined by fortuitous circumstances, force majeure or in any case circumstances beyond his control. The delivery dates do not have a peremptory or essential nature but are purely meant as approximate and non-binding for the Seller. Any delays in the delivery shall not entail a penalty or indemnity or compensation for damages, or application of default interests, or even a partial termination of the Contract.

4.2 Request for postponement of delivery and/or unsuitability of Site to receive Products. In case the Purchaser requests for any reason a postponement of delivery date of Products (by way of example and not limited to: delay in work progress on Worksite, delay in carrying out of work preparations to receive Products etc), the Seller shall store the Products at its own company or at a third party's and shall have the right to a reimbursement for the deposit of the Products for the whole duration of the deposit of Goods and moreover, shall have the right to the payment of the balance of the price of the Goods as referred to in the above article 3.4.

4.3 Delay in the delivery due to Purchaser. In case the Seller is late in the delivery for reasons caused by the Purchaser, the Seller shall not be liable for the delay or any allowance or damage compensation that may be requested from him, as indicated in art. 4.1.

4.4 Delivery clause. Unless otherwise agreed, the Seller delivers the Products according to Incoterms ® 2020, indicated in the Order Confirmation.

4.5 Passing of risk. Risk of loss or deterioration of Products goes to Purchaser at time of delivery of Products to Purchaser in accordance with art. 4.4.

4.6. Storage Obligation. The Purchaser undertakes to store the Products separately from other goods in the Worksite, in a dry, under shelter and supervised area, considering the particular climactic conditions of the place of destination and the nature of the material with which the Goods are built.

4.7. Communication of any damages during transportation. Upon receiving the Products at his own establishment, the Purchaser must check that the Products are intact and have not undergone deterioration or damages, and must communicate to the Seller and to the carrier any deterioration or damage of the Products within 2 (two) Business days of the receipt of the Products.

**ART. 5 – TESTING, INSTALLATION AND TECHNICAL ASSISTANCE FOR INSTALLATION**

5.1 Testing. The Purchaser may request, under penalty of forfeiture, the testing of the products in the Order. The testing, if requested, shall be carried out exclusively at one of the Seller's locations, chosen at the Seller's discretion, within 10 (ten) Business days from the notification to the Purchaser that the Products are ready for testing. The Seller may specify a cost for the execution of the testing in the Order Confirmation, which shall be borne by the Purchaser. The Seller shall prepare the "Testing Report," which shall be signed by both Parties. Any interventions for the removal of defects and/or faults shall be quantified and agreed upon by the Parties regarding the timing and methods of intervention, taking into account the Seller's production needs. The lapse of 15 (fifteen) Days without the Purchaser's participation in the testing will result in the Purchaser's waiver of the testing, and the Seller may proceed with the testing internally without any opposition.

5.2 Installation. The Installation of the Products at the Site shall be carried out by and at the expense of the Purchaser, in accordance with the procedures set forth in the "Instruction Manual" provided by the Seller.

5.3. Technical assistance for the installation at the Site. The Purchaser may ask for Technical assistance for the installation of the Goods in the Order, should he ask for it after filling out the Order, the Seller shall accept to carry out the Technical assistance at his discretion. Should the Seller accept to carry out the Technical assistance for installation the Seller shall communicate the relative costs which shall be entirely borne by the Purchaser as indicated in art. 5.7.

5.4. Number of persons. The number of persons (Operators, as defined in art. 1 lett. K) who will be in charge of the Technical assistance for the installation of the Goods shall be decided at the Seller's discretions. All the staff dedicated to the assistance is equipped with suitable individual protection (D.P.I.), based on pinpointed risks, and communicated to the Purchaser by the Seller in writing.

5.5. Extension of stay for Technical Assistance for installation of the Goods. In case the Technical assistance for installation of Goods days agreed on between the Parties should be modified and/or extended for any reason not liable to the Seller, any increased costs shall be borne by the Purchaser (ex. higher travel costs), as well as a daily allowance for each Operator, whose sum is specified in the Order Confirmation or subsequently following the request for Technical assistance for the installation. The Purchaser undertakes to pay for the owed amounts when paying the balance of the price.

5.6. Available spaces on the Site: restrooms and kitchen. The Purchaser undertakes to equip the Site with adequate sanitary facilities and suitable spaces to allow the Operators to cook and have meals. If no hotel is available near the Worksite, the Purchaser shall also arrange for decent and clean accommodation for the Operators' overnight stay.

5.7 Expenses to be borne by the Purchaser. If the Seller carries out the Technical assistance for the installation, the following expenses shall be borne by the Purchaser:

a) travelling expenses (round-trip airfare ticket) and of prophylaxis for each of the Seller's Operators, according to what the Farnesina suggests (Ministry of Foreign Affairs) or what is considered appropriate for each Operator;

b) extra travelling expenses (ex. surcharge or new airfare ticket) for each Operator, because of early or delayed return to Italy for whatever reason which is not attributable to Seller;

c) travel insurance expenses, accident, death, medical assistance in general extra, for each Operator beyond the duration of the stay for reasons not attributable to the Seller;

d) transfers in private car or in public means of transportation from the airport to the accommodation, from the accommodation to the Site and vice versa, of the Operators;

e) room and board expenses for each Operator: each Operator shall have a single room with private restroom at his disposal as well as a laundry service, a bar/restaurant service, a cleaning service and the room shall be in a secure, supervised area. The board shall include: breakfast, quick lunch (also on Worksite), dinner;

f) expenses for interpreting services in English and in the local language at the Site.

**ART. 6 - RETENTION TITLE**

The Products remain the property of the Seller until full payment of the price as per Article 3.1. Any formalities (e.g., contract registration) required in the Purchaser's country for the validity of this article shall be borne by the Purchaser. The Purchaser undertakes, in the event of resale of the Products to third parties before full payment to the Seller, to inform third parties that the Products belong to the Seller until full payment is made. In the event of termination of the Contract due to the Purchaser's breach, the price installments paid shall be retained by the Seller as compensation within the limits set by law, without prejudice to the right to claim further damages arising from such termination.

**ART. 7 - GUARANTEE**

7.1 Seller's liability. The Seller is liable for the defects of the Products, only if the defects are not due to the Purchaser's fraud or fault, and the Seller is able to verify the existence of the defects contested by the Purchaser.

7.2 Duration of the guarantee and of the deadline for reporting defects. The defects of the Goods shall be reported in writing to the Seller within 30 (thirty) Days of the discovery or from the time the Purchaser should have known about them. The guarantee shall expire within 2 (two) years of the delivery of the Goods.

7.3 Consequences in case of defects. The Seller may, at its discretion, repair, replace, or issue a credit note in the case of a Product defect, after receiving from the Purchaser photos of the defective Products via email, according to the procedures to be agreed upon by the Parties. If the Seller requests the Purchaser to send the Product to its premises or to those of its supplier for repair, the Purchaser shall bear the cost and risk of transporting the Product, including the cost and risk of returning the Product to the Site.

7.4 Prohibition for the Purchaser to repair the defective Product. The Purchaser is not authorized, in the case of defective Products, to proceed without the written consent of the Seller: a) to repair or replace the defective Product directly or indirectly through third parties; b) to send the Products to the Seller.

7.5. Exclusion of Warranty. The warranty is excluded in the following cases:

(a) failure, delayed, or partial payment of the price by the Purchaser; (b) alterations and/or modifications of the Products not authorized in writing by the Seller; (c) improper use of the Products; (d) storage and/or deposition of the Products in a manner not suitable for the nature and type of the Products; (e) electrical or hydraulic connection errors, or inadequate or absent protection of the Product; (f) improper installation of the Product; (g) the Product has been subjected to overloads beyond the rated limits; (h) contact of the Products with abrasive or corrosive liquids, or any other substances incompatible with the materials used in the construction of the Products; (i) normal wear and tear of the Products and/or their materials; (j) inadequate transportation methods if the transportation is managed by the Purchaser.

7.6 Exclusion of Liability. Without prejudice to the application of the laws regarding liability for damage caused by defective products, the Purchaser hereby waives any claim for damages and any right to cancel the Order, in whole or in part, and/or suspend payment for the Products, even if limited to the disputed batch, pursuant to Article 3.7 of this Contract.

**ART. 8 - PACKAGING**

8.1 Standard packaging. The standard packaging provided by the Seller for the Products and accessories is in pallets, cartons, or wooden crates.

8.2. Non-standard packaging. If the Purchaser requires a different type of packaging from the standard, it shall be communicated in the Order under penalty of forfeiture.

**ART. 9- HARDSHIP CLAUSE**

9.1 Bound to perform contractual duties. Each Party of this Contract is bound to perform its contractual duties even if the events have rendered performance more onerous than could reasonably have been anticipated at the time of the formation of the Contract.

9.2 Negotiation of new contractual terms. Notwithstanding art. 9.1, where a Party proves that:

a) the continued performance of its contractual duties has become excessively onerous due to an event beyond its reasonable control which it could not reasonably have been expected to have taken into account at the time of the formation of the Contract; and that

b) it could not reasonably have avoided or overcome the event or its consequences,

the Parties are bound, within a reasonable time of the invocation of this article, to negotiate new contractual terms which reasonably allow for the cons quences of the event.

9.3 Termination of the Contract because of lack of agreement between the Parties. Where art. 9.2 applies, but where new contractual terms which reasonably allow for the consequences of the event are not agreed by the other Party to the Contract as provided in that article, the Party invoking this article is entitled to termination of the Contract.

9.4 Consequences in case of termination of the Contract. If the Seller enforces the present article, and the Purchaser does not agree with the new contractual conditions, the Purchaser shall have the right to terminate the present Contract but shall not be entitled to a refund of what was already paid to the Seller

**ART. 10 - EARLY TERMINATION OF THE CONTRACT**

10.1 Early termination of the Contract. The Seller may terminate this Contract with immediate effect, by means of an email notification followed by a written notice sent by means of communication ensuring evidence and date of receipt, in case of a breach of contractual obligations by the Purchaser, amounting

to a justifiable reason for immediate contract termination or in case of occurrence of exceptional circumstances which justify the earlier termination, as set forth below.

10.2 Breach of Contractual obligation. The Parties jointly agree that the breach of the provisions under articles 2.5, 3.4, 3.6, 9.3, 11.2, 13.2, 15.2 is to be considered in any case, whatever the importance of the violation, as a justifiable reason for immediate Contract termination. Furthermore, the breach of any other contractual obligation, which is not remedied by the breaching party within 30 (Thirty) days after having been invited in writing to do so by the order Party, shall be considered as a justifiable reason for the immediate Contract termination.

10.3 Exceptional circumstances. Shall be considered as exceptional circumstances justifying the immediate Contract termination: bankruptcy, any kind of composition between the bankrupt and the creditors, death or Purchaser's failure, civil or criminal penalties and any other circumstance that could compromise the Purchaser's reputation, any important changes in the juridical structure or in the management of the Purchaser, as well as any circumstances which may affect the punctual carrying out of the obligations set forth in the Agreement.

10.4 Consequences in case of early termination. In the event of early termination of the contract, the Purchaser recognizes the Seller's right to retain the amounts received by him as an adjustment for the price of the Goods and to request any amount still owing until the complete attainment of the total price indicated in the Order Confirmation in accordance art. 3.1, except for any further damage.

**ART.11 - VALIDITY OF THE CONTRACT**

1.1 Invalid or unenforceable clause. Should any clause be considered invalid or unenforceable by the judgement of a Court of competent jurisdiction or award of an Arbitral Tribunal, all other provisions shall remain in full force and effect.

11.2 Replacement of any invalid prevision. The Parties agree, however, to replace, when possible, any provision declared invalid by a provision which shall reflect their initial intent, as objectively and consistently as possible and in accordance with the basic relationship existing between the Parties.

**ART. 12- NO WAIVER**

The non-enforcement of any provision contained in this Contract shall not be construed by the Seller as a waiver of the right to enforce the provision at another time under different circumstances and/or enforce other provisions of this Contract.

**ART. 13 - FORCE MAJEURE**

13.1 Force majeure events. In the event of an Act of God (including but not limited to a flood, earthquake, typhoon, epidemic or other natural calamity), war, civil war, or armed conflict or the serious threat of the same (including but not limited to a hostile attack, blockade, embargo, riot or insurrection), governmental order or regulation (including but not limited to prohibition or restriction of importation or exportation or the regulation or allocation of energy resources), labour disputes (including but not limited to a strike, slowdown, lockout or sabotage), or any other causes beyond the reasonable control of the parties hereto (including a fire, power failure, delay in the delivery of component and/or raw materials), neither Party shall be liable for any failure to perform any of its obligations hereunder.

13.2 Termination of the Contract due to force majeure. Any Party hereto shall have the right to terminate this Agreement upon prior written notice if either party is unable to fulfil its obligations under this Agreement due to any of the above-mentioned causes and such inability continues for a period of 6 (six) months

**ART. 14 - COMMUNICATION**

14.1 Form of the communication. All correspondence, communications and documents between the Parties shall be in writing in English, Spanish or French (by e-mail, courier) and shall be sent to the last known address of the other Party.

14.2 Receiving of the communication. The communications sent by mail shall be deemed to be received after 7 (seven) days from the sending. The communications sent by e-mail shall be deemed to be received the same day of the sending.

**ART.15 - INTELLECTUAL PROPERTY**

15.1 Ownership of Intellectual Property. The Purchaser expressly recognizes the Seller's ownership of intellectual property rights relating to present Contract, by way of example and not limited to (brands, technical and commercial documentation related to samples, catalogues, schedules, ideas, photographic and audiovisual images etc.). Any use, reproduction, dissemination or representation of such document can occur exclusively following a written authorization written by the Seller and within the limits indicated in the same authorization. Such rights are protected by the Italian law and by International regulations.

15.2 Prohibition of anti-competitive behaviour. The Purchaser is prohibited from displaying anti-competitive behaviour of the intellectual property rights, which go against the aforementioned regulations and/or agreements between the Parties.

**ART. 16 – MEDIATION AND JURISDICTION**

16.1 Dispute resolution with Purchaser residing or having his registered office in the European Union (Mediation and Jurisdiction).

16.1.1 Mediation. Any dispute arising from the relationship between the Parties concerning the interpretation, execution, validity, and termination of this Contract shall be submitted to a mediation procedure conducted by a sole mediator, appointed, and proceeding in accordance with the Mediation Rules of the Mediation Centre for Europe, the Mediterranean and the Middle East having its seat in Strasbourg, which Rules are in force at the date of filing of the application for mediation.

16.1.2 Exclusive jurisdiction. In the event of a negative outcome of the conciliation attempt within forty-five (45) days from the filing of the conciliation request, or within any other term agreed upon by the Parties, the dispute will be exclusively referred to the Court of Verona (Italy).

16.1.3 Venue for mediation procedure. The venue for the mediation procedure is in Padua (Italy). The language of the procedure is English.

16.2 Dispute resolution with Purchaser residing or having its registered office in a Non-EU country (Mediation and Arbitration).

16.2.1 Mediation. Any dispute arising from the relationship between the Parties concerning the interpretation, execution, validity, and termination of this Contract shall be submitted to a mediation procedure conducted by a sole mediator, appointed, and proceeding in accordance with the Mediation Rules of the Mediation Centre for Europe, the Mediterranean and the Middle East having its seat in Strasbourg, which Rules are in force at the date of filing of the application for mediation.

16.2.2 Arbitration. In the event that the mediation is not successful, the arbitration proceedings shall be conducted in accordance with the Arbitration and Internal Rules of the European Court of Arbitration being part of the European Centre of Arbitration, having its seat in Strasbourg and of which adoption of this clause constitutes acceptance, by a sole arbitrator, who will be appointed, by the Central Registrar Strasburg.

16.2.3 Seat of mediation and arbitration, language and substantive law. The seat of the mediation and arbitration proceedings shall be Padua (Italy). The language of the proceedings shall be English. The applicable rules of substantive law shall be Italian law.

16.2.4 Emergency measures. In any case, the Parties reserve the right to seek the competent judicial authority in the event of the need to obtain emergency measures to protect their rights

**ART 17 - APPLICABLE LAW**

The present Contract is governed by the United Nations Convention on the International Sales of Goods and, with respect to questions not covered by such Convention by the law of Italy.

**ART. 18 - PRIVACY POLICY**

In compliance with the Italian Personal Data Protection Code Legislative Decree No. 196/2003), and the General Data Protection Regulation (EU Regulation 2016/679) we inform you that your personal information will be recorded and handled for legal, fiscal and commercial purposes. The processing of your personal data may be performed also to send advertising materials or to carry out commercial communication activities related to PENTAX INDUSTRIES SPA. You are not obliged to give us your personal information. If you do not provide your personal information, it may be impossible for us to refer, respond to, or investigate your complaint or request. This provision does not apply to the processing of personal data performed to send advertising materials to carry out commercial communication activities. We may share your information with our employees, contractors acting on our behalf, consultants, any public or private authority that must access your data, who are subject to confidentiality agreements, only for the abovementioned purposes. Your data may be disseminated through our web site or our publications for commercial reasons. The abovementioned collection and handling of information, which may be automatically processed, will be made using those tools as are appropriate to guarantee its security and confidentiality. The collection and handling of your personal information will run for a period of ten (10) years after the termination of the contractual relationship. After that period, the information will be erased. You are entitled to the rights as per articles 15-22 of EU Regulation 2016/679 and you may access your personal information to correct, update, rectify, make anonymous, integrate, cancel and/or block it. The Data Controller is PENTAX INDUSTRIES SPA.

# NOTES

# NOTES

# NOTES

COMPANY WITH QUALITY, ENVIRONMENT, HEALTH AND SAFETY MANAGEMENT CERTIFIED SYSTEMS
UNI EN ISO 9001: Certificate No. 50 100 3634
UNI EN ISO 14001: Certificate No. 50 100 12552
UNI ISO 45001: Certificate No. 50 100 14960

50Hz

# Where there's water there's Pentax

**PENTAX s.p.a.**
Viale dell'Industria, 1
37040 Veronella (VR) - Italia
Tel. +39 0442 489500 - Fax +39 0442 489510
*www.pentax-pumps.it*
*com@pentax-pumps.it*

*rev. 40c_07/2026*