MARLY
SPECIALISTS IN RISING LIQUIDS

HP-HV

Technical Catalogue **50Hz**

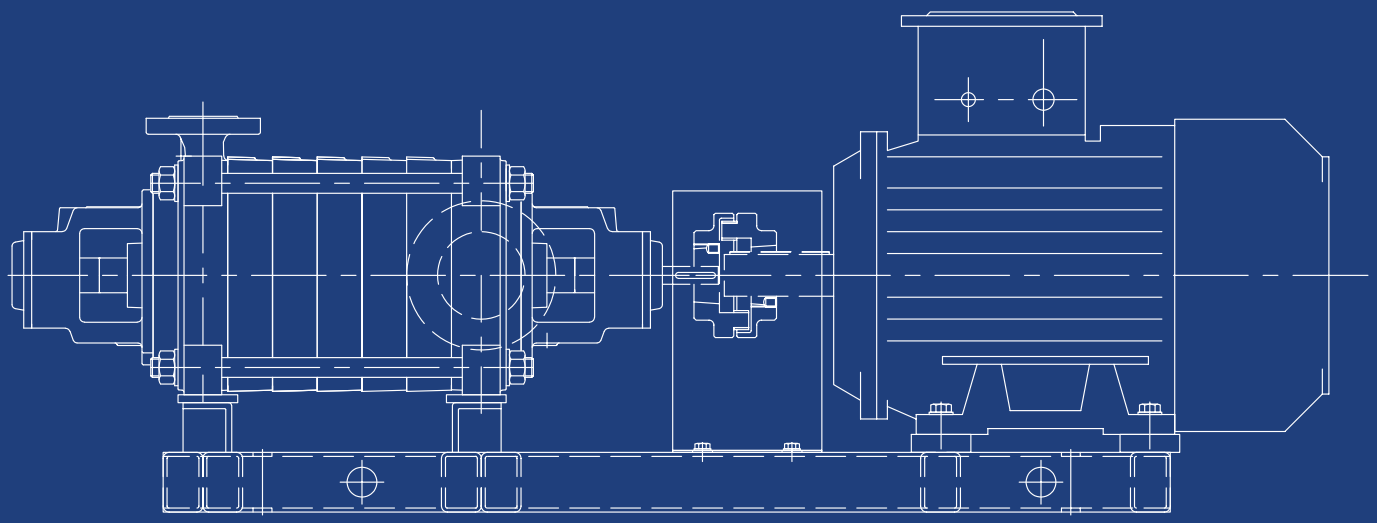

www.marly-pumps.it

Research. Development.
Excellence.
REGISTERED OFFICE
Viale dell'industria, 1
37040 Veronella (VR) Italy
Tel. +39 0442 489 500
OPERATIONAL SITE
Via Salvo D'Acquisto, 4B
42020 Albinea (RE) - Italy
Tel. +39 0522 597 112
VERONA BUSINESS REGISTER
02807990235
VAT No. and Tax Code: 02807990235
www.marly-pumps.it
sales@marly-pumps.it
MARLY
SPECIALISTS IN RISING LIQUIDS
manufacturer:
PENTAX s.p.a.

THE COMPANY

The Company: Marly is a company specialized in centrifugal pumps and with many years of experience in the industrial sector.

The current managerial staff began an activity of producing pumps with special materials and executions also on commissioning. For over 28 different application sectors success in the pump sector since the 70s. Today Marly is a standard-setting player in the industrial pumps sector, with in-house design, production and testing.

QUALITY

Pentax Industries is UNI EN ISO 9001, UNI EN ISO 14001 and UNI ISO 45001 certified.

Pentax is equipped with a control structure and a continuous improvement production process plan that provide, for each product, compliance with the most stringent quality standards in the industry.

OFFICIAL JOURNAL OF THE EUROPEAN UNION

Regulation UE 547/2012
ANNEX II

«The benchmark for most efficient water pumps is MEI ≥ 0,70».

«The efficiency of a pump with a trimmed impeller is usually lower than that of a pump with the full impeller diameter. The trimming of the impeller will adapt the pump to a fixed duty point, leading to reduced energy consumption. The minimum efficiency index (MEI) is based on the full impeller diameter».

«The operation of this water pump with variable duty points may be more efficient and economic when controlled, for example, by the use of a variable speed drive that matches the pump duty to the system».

Information on benchmark efficiency is available at:
www.europump.org/efficiencycharts.

CERTIFICATO
Nr. 50 100 3634 Rev.008
SI ATTESTA CHE / THIS IS TO CERTIFY THAT
IL SISTEMA DI GESTIONE PER LA QUALITÀ DI
THE QUALITY MANAGEMENT SYSTEM OF
PENTAX S.p.A.
SEDE LEGALE E OPERATIVA:
REGISTERED OFFICE AND OPERATIONAL SITE:
VIALE DELL'INDUSTRIA 1
IT - 37040 VERONELLA (VR)
SEDI OPERATIVE: VEDI ALLEGATO 1 / OPERATIONAL SITES: SEE ANNEX 1
È CONFORME AI REQUISITI DELLA NORMA
HAS BEEN FOUND TO COMPLY WITH THE REQUIREMENTS OF
UNI EN ISO 9001:2015
QUESTO CERTIFICATO È VALIDO PER IL SEGUENTE CAMPO DI APPLICAZIONE
THIS CERTIFICATE IS VALID FOR THE FOLLOWING SCOPE OF APPLICATION
Progettazione e fabbricazione di elettropompe e sistemi di pressurizzazione per acque. Commercializzazione di pompe sommerse e accessori per pompe (IAF 18, 29)
Design and manufacture of electric pumps and pressure systems for water. Trade of submersed pumps and accessories for pumps (IAF 18, 29)
ACCREDIA
Per l'Organismo di Certificazione
For the Certification Body
TÜV Italia S.r.l.
Validità / Validity
Dal / From: 2021-11-01
Al / To: 2024-10-31
Francesco Scarlata
Direttore Divisione Business Assurance
Business Assurance Division Manager
Data emissione / Issuing Date
2021-10-25
PRIMA CERTIFICAZIONE / FIRST CERTIFICATION: 2003-12-22
"LA VALIDITÀ DEL PRESENTE CERTIFICATO È SUBORDINATA A SORVEGLIANZA PERIODICA A 12 MESI E AL RIESAME COMPLETO DEL SISTEMA DI GESTIONE AZIENDALE CON PERIODICITÀ TRIENNALE"
"THE VALIDITY OF THE PRESENT CERTIFICATE DEPENDS ON THE ANNUAL SURVEILLANCE EVERY 12 MONTHS AND ON THE COMPLETE REVIEW OF COMPANY'S MANAGEMENT SYSTEM AFTER THREE YEARS"

CERTIFICATO
Nr. 50 100 12552 - Rev.002
Si attesta che / This is to certify that
IL SISTEMA DI GESTIONE AMBIENTALE DI
THE ENVIRONMENTAL MANAGEMENT SYSTEM OF
PENTAX S.p.A.
SEDE LEGALE E OPERATIVA: / REGISTERED OFFICE AND OPERATIONAL SITE:
VIALE DELL'INDUSTRIA 1 I-37040 VERONELLA (VR)
SEDE OPERATIVA: / OPERATIONAL SITE:
VIA SALVO D'ACQUISTO 4/B I-42020 ALBINEA (RE)
MAGAZZINO: / WAREHOUSE:
VIALE DELL'INDUSTRIA 19 I-37040 VERONELLA (VR)
È CONFORME AI REQUISITI DELLA NORMA
HAS BEEN FOUND TO COMPLY WITH THE REQUIREMENTS OF
UNI EN ISO 14001:2015
QUESTO CERTIFICATO È VALIDO PER IL SEGUENTE CAMPO DI APPLICAZIONE
THIS CERTIFICATE IS VALID FOR THE FOLLOWING SCOPE
Progettazione e fabbricazione di elettropompe e sistemi di pressurizzazione per acque mediante processi di lavaggio e impregnazione dei getti di ghisa, lavorazioni meccaniche, bilanciatura rotanti, assemblaggio, verniciatura, imballo e spedizione. Commercializzazione di pompe sommerse e accessori per pompe (IAF 18, 29)
Design and manufacture of electric pumps and pressure system for water by processes of: impregnation and cleaning of cast iron items, mechanical machining, impellers and motor shafts balancing, assembling, painting, packing and shipment. Trade of submersed pumps and accessories for pumps (IAF 18, 29)
CERTIFICAZIONE RILASCIATA IN CONFORMITÀ AL REGOLAMENTO TECNICO ACCREDIA RT-09
CERTIFICATION ISSUED IN ACCORDANCE TO ACCREDIA TECHNICAL REGULATION RT-09
ACCREDIA
SGA N° 016D
Per l'Organismo di Certificazione
For the Certification Body
TÜV Italia S.r.l.
Validità / Validity
Dal / From: 2020-07-12
Al / To: 2023-06-15
Andrea Coscia
Direttore Divisione Business Assurance
Data emissione / Issuing Date:
2020-07-12
PRIMA CERTIFICAZIONE / FIRST CERTIFICATION: 2014-05-16
DATA DI SCADENZA DELL'ULTIMO CICLO DI CERTIFICAZIONE: 2020-06-15
EXPIRATION DATE OF THE LAST CERTIFICATION CYCLE: 2020-06-15
"LA VALIDITÀ DEL PRESENTE CERTIFICATO È SUBORDINATA A SORVEGLIANZA PERIODICA A 12 MESI E AL RIESAME COMPLETO DEL SISTEMA DI GESTIONE AZIENDALE CON PERIODICITÀ TRIENNALE"
"THE VALIDITY OF THE PRESENT CERTIFICATE DEPENDS ON THE ANNUAL SURVEILLANCE EVERY 12 MONTHS AND ON THE COMPLETE REVIEW OF COMPANY'S MANAGEMENT SYSTEM AFTER THREE YEARS"

CERTIFICATO
Nr. 50 100 14960 - Rev.002
Si attesta che / This is to certify that
IL SISTEMA DI GESTIONE SICUREZZA E SALUTE DEI LAVORATORI DI
THE OCCUPATIONAL HEALTH AND SAFETY MANAGEMENT SYSTEM OF
PENTAX S.p.A.
SEDE LEGALE:
REGISTERED OFFICE:
VIALE DELL'INDUSTRIA 1
IT - 37040 VERONELLA (VR)
SEDI OPERATIVE: VEDI ALLEGATO 1
OPERATIONAL SITES: SEE ANNEX 1
È CONFORME AI REQUISITI DELLA NORMA
HAS BEEN FOUND TO COMPLY WITH THE REQUIREMENTS OF
UNI ISO 45001:2018
QUESTO CERTIFICATO È VALIDO PER IL SEGUENTE CAMPO DI APPLICAZIONE
THIS CERTIFICATE IS VALID FOR THE FOLLOWING SCOPE
Progettazione e fabbricazione di elettropompe e sistemi di pressurizzazione per acque mediante processi di lavaggio e impregnazione dei getti di ghisa, lavorazioni meccaniche, bilanciatura rotanti, assemblaggio, verniciatura, imballo e spedizione. Commercializzazione di pompe sommerse e accessori per pompe. Magazzino (IAF 18, 29)
Design and manufacture of electric pumps and pressure system for water by processes of: impregnation and cleaning of cast iron items, mechanical machining, impellers and motor shafts balancing, assembling, painting, packing and shipment. Trade of submersed pumps and accessories for pumps. Warehouse (IAF 18, 29)
ACCREDIA
SCR N° 009F
Per l'Organismo di Certificazione
For the Certification Body
TÜV Italia S.r.l.
Validità / Validity
Dal / From: 2021-02-27
Al / To: 2024-02-26
Andrea Coscia
Direttore Divisione Business Assurance
Data emissione / Issuing Date
2020-12-23
PRIMA CERTIFICAZIONE / FIRST CERTIFICATION: 2018-02-27 (EMESSO DA ALTRO OdC / ISSUED BY OTHER CB)
"LA VALIDITÀ DEL PRESENTE CERTIFICATO È SUBORDINATA A SORVEGLIANZA PERIODICA A 12 MESI E AL RIESAME COMPLETO DEL SISTEMA DI GESTIONE AZIENDALE CON PERIODICITÀ TRIENNALE"
"THE VALIDITY OF THE PRESENT CERTIFICATE DEPENDS ON THE ANNUAL SURVEILLANCE EVERY 12 MONTHS AND ON THE COMPLETE REVIEW OF COMPANY'S MANAGEMENT SYSTEM AFTER THREE YEARS"

PRODUCTION

Maximum Expertise applied to the industry

Marly's Production is situated in the industrial district of Reggio Emilia

Our products: with its manufacturing department, Marly can ensure maximum care and accuracy in all manufacturing stages, from processing cast parts, assembling them and lastly performing hydraulic testing on the pump before shipping. All pumps are end-of-line tested to ensure the correct operation of the installation. **The hydraulic performance are controlled and guaranteed according to ISO 9906 grade 3B.**

Marly is situateted in the industrial district of Reggio Emilia where an extensive network of suppliers with cutting edge technologies and specific and long-standing experience in the centrifugal pump sector make it possible for the company to procure unfinished parts locally, manufactured with quality steel that the market and industrial customers demand with increasing frequency.

CUSTOMER SERVICE

FULLY COMPREHENSIVE BEFORE AND AFTER SALES ASSISTANCE WITH THE ASSISTANCE OF HIGHLY SPECIALISED TECHNICIANS

Marly offers a number of tools for both pre- and post-sale customer support.

Today, thanks to many years of experience in industrial sectors and the most advanced programming and data processing instruments in the mechanical and chemical fields, Marly is able to provide customers with a set of competencies and analysis tools with high added value.

PRE-SALES

During the inital assessment of the various products, Marly technical personnel are availale to draft technical reports that allow customers to compare our solutions with those described in the technical specifications.

Should there be no specifications, the technical department develops a proposal based on the plant or the final user data, with a description of the results the Marly solution would achieve.

Marly also has nation-wide support programs as part of its pre-sales and promotional activity.

To this end, technical seminars and held regularly at design studios or consulting departments in order to highlight the technical advantages of Marly solutions and to help consultants fill out technical specifications.

POST-SALES

Upon request, once the job order has been purchased, Marly and its staff of engineers can accompany the customer through the delicate plant installation and commissioning phase. Supervision during this first operating phase ensures proper operation and the performance determined during the the design phase.

Marly technical personnel can hold training sessions even at this phase, dedicated to the customer's installation team or the local Marly distributor in order to ensure technical support at the workplace even after the plant has begun normal operation.

INDEX

HP LINE	**9**
INTRODUCTION TO THE HP LINE	10
MAIN CHARACTERISTICS	11
MAIN TECHNICAL AND CONSTRUCTIONAL FEATURES	13
AVAILABLE MATERIALS AND EXECUTIONS	14
CONSTRUCTIVE FEATURE AND OPERATIVE DATA	19
NAME KEY	24
PERFORMANCE	**25**
CURVES	**25**
4 POLES	26
2 POLES	49
PUMP DIMENSIONS	**71**
HPA	72
HP	73
HPMA	74
HPM	75
HPR	76
PUMP + MOTOR DIMENSIONS	**77**
HPA	78

HP 91

HPMA 107

HPM/HPR 120

HV 136

SPARE PARTS AND REFERENCE CODES 137

AVAILABLE PUMP FLANGE POSITIONS 161

DIRECTION OF FLANGES HORIZONTAL PUMPS 162

DIRECTION OF NOZZLES VERTICAL PUMPS 165

FORCES AND TORQUES 166

MOTOR DATA AND OVERALL DIMENSIONS 167

HEAD LOSSES 177

TECHNICAL APPENDIX 177

POWER ABSORBED BY THE GLAND 180

MEASUREMENT COMPARISON IN UNIT 181

TECHNICAL APPENDIX 182

CASE STORY 187

GENERAL SALES CONDITIONS 198

MARLY

HP LINE

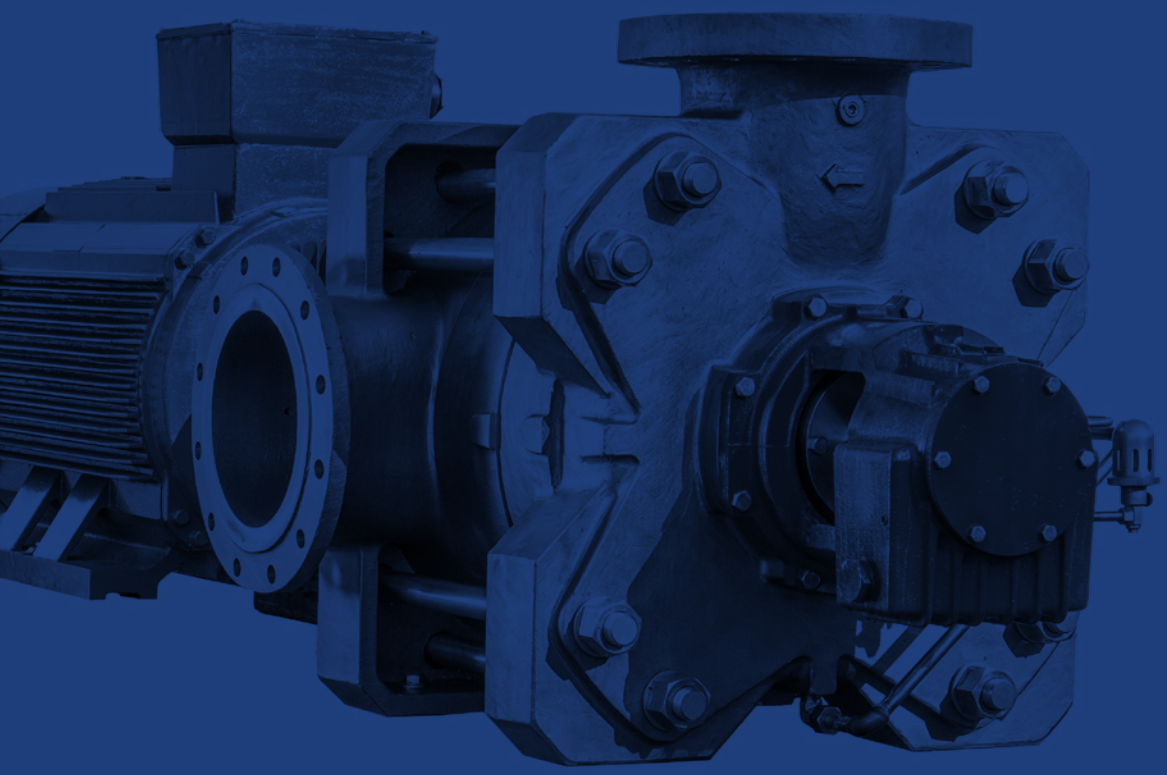

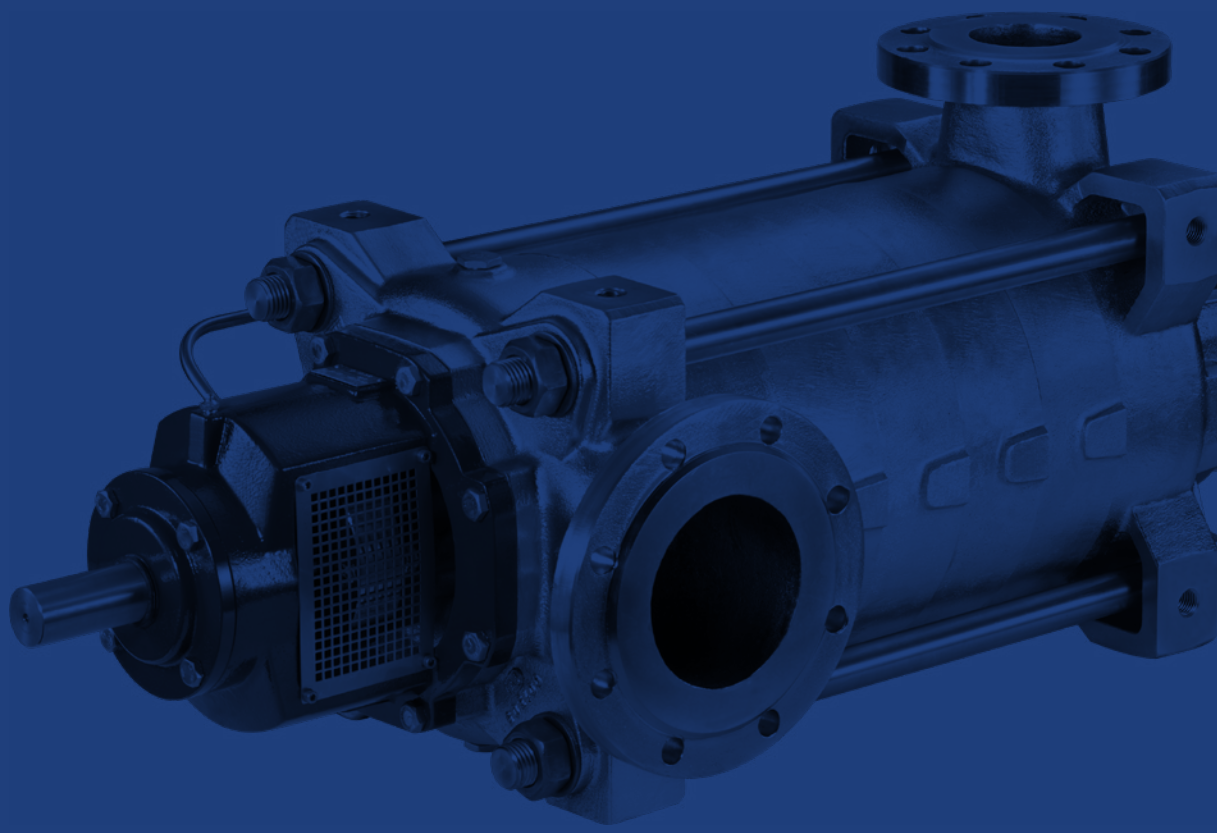

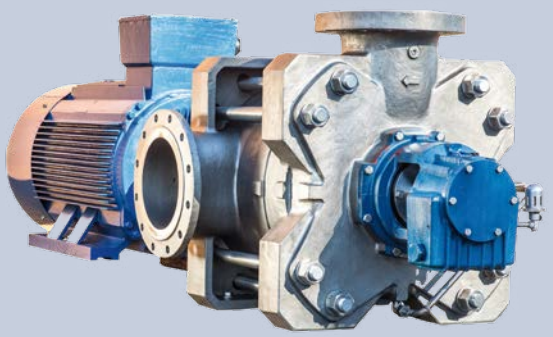

Introduction to the HP line

The multistage centrifugal pumps belonging to the HP series have a radial cross section, allowing an horizontal or vertical installation.

The flanges of the suction and discharge ports are according to the EN or ANSI standards, these ports can operate radially and can be rotated 90°, in the HP, HPM and HPR models, or have an axial suction port for the HPA and HPMA models.

This family of pumps is designed to operate in heavy duty conditions and with very high pressures (up to 100 Bar for the HPR versions) and with temperatures up to 180°C.

The great choice of materials, the different kinds of sealing on the shaft and the various lubrication solutions for the pump's bearings, make this line very versatile and ideal for many uses in the industrial, energy and water processing fields.

General operating data

- Pressure up to 100 bar
- Temperatures from -20 °C to +180 °C
- Rotational speed up to 3600 rpm.
- Standard flanges: UNI/EN
- Suction port: DN 40-300 - PN 16-25
- Discharge port: DN 25-250 - PN 63-100
- Performance tolerances: ISO9906-3B

Main characteristics

- **Flow rates** up to 1.200 m³/h
- **Pressure** up to 400 m
- **Thrust bearing** (grease or oil with optional external cooling) for use of standard engines
- **Pressure** up to 1.000 m
- High **hydraulic efficiency**, up to 80%
- **Balancing drum**, placed on the discharge casing, which effectively compensates the axial thrust produced by the impellers
- Versatile **sealing system**: which is available as packing, single
- **Mechanical** or **Balanced Mechanical**, other special types upon request
- The pumps' **bearings** are available with grease or oil lubrication in order to assure a long operating life
- **Wear rings**: they are available both fixed as well as rotating, in various materials, with hardening treatments

On request the full HP range is available with Atex Certification

ATEX

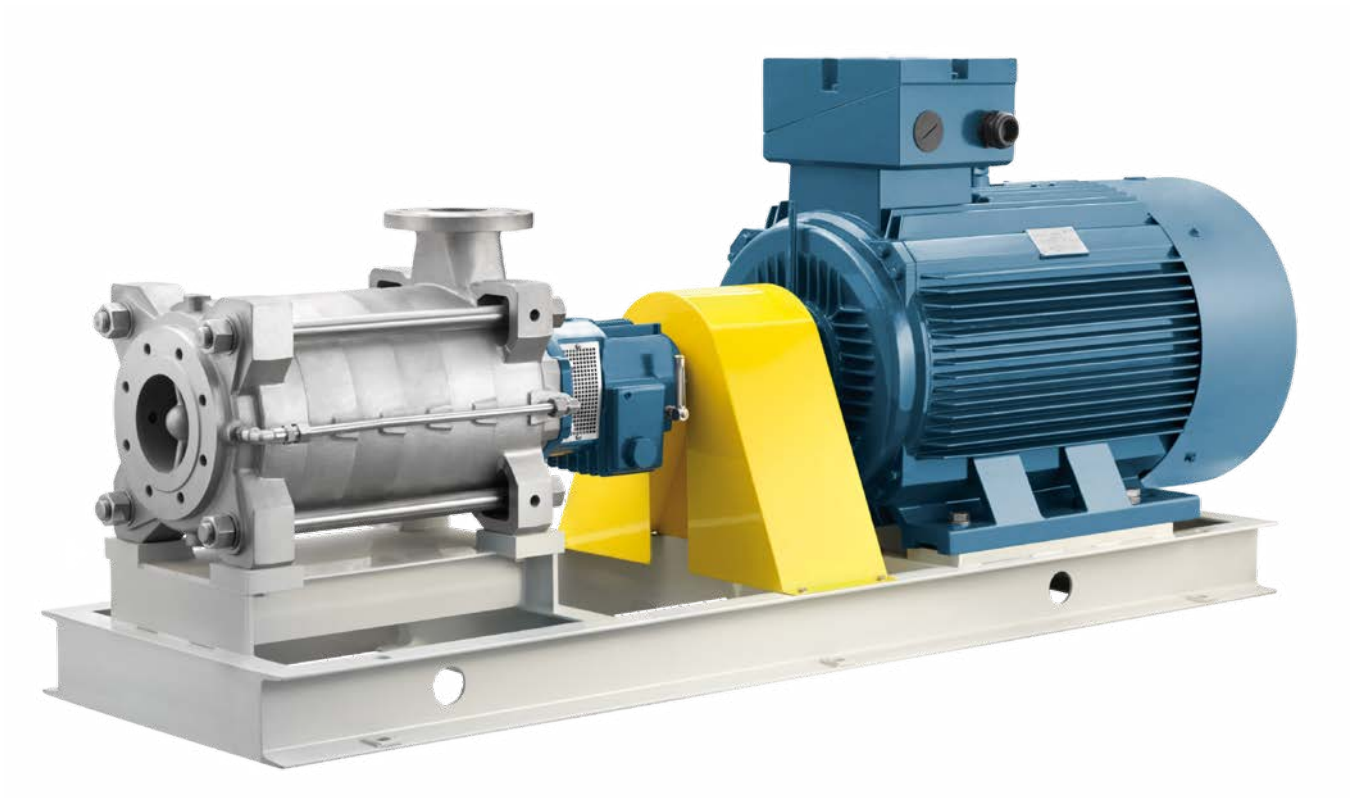

Main fields of application

- Pressure raising groups in the building and construction sector
- Firefighting and applications with diesel engines
- Mining and ATEX applications
- Water desalination by reverse Osmosis
- Water treatment plants
- Geothermal plants
- Service facilities in the petrochemical sectors, Energy
- Boiler feed
- Filtration and ultrafiltration plants

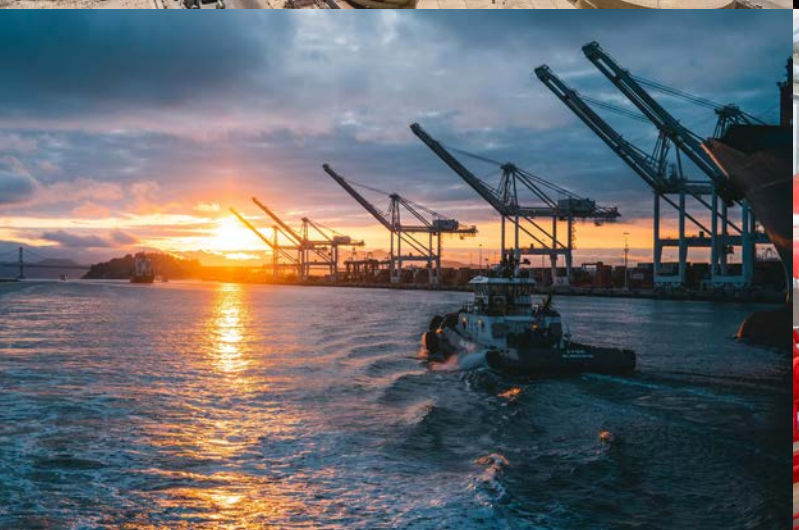

Main technical and constructional features

The **impellers** which are casted and available in various metals, are radial, closed and blocked to the shaft by keys. The suction impeller is designed to achieve very low NPSHr values.

To improve the hydraulic efficiency, limit the mechanical wear and optimise the routine maintenance, all the impellers are equipped with shims. Available upon request rotating shims and on the hub.

Radial impeller

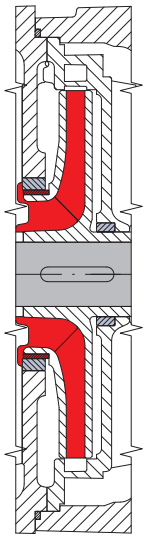

To assure a long operational life for the thrust bearings, a **balancing drum** is housed in the discharge casing, it is designed to reduce the impellers' axial thrust. The drum, which is fed by a balancing tubing, is made of AISI 420 steel, superficially hardened and provided with a wear sleeve which is available in different materials.

Balacing drum

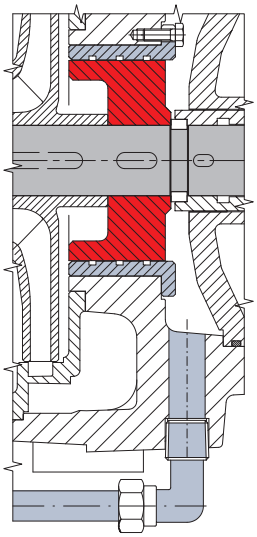

The **seal chamber** is suitable to house both a packing seal as well as a mechanical one. The shaft near the seal is protected by specific special steel shaft sleeves that facilitate the maintenance. The mechanical seals are standardised according to standard EN 12756; and can be of the following kinds:

- Balanced or simple mechanical seal, cooled by the pumped liquid or externally flushed through a specific orifice
- Double mechanical or cartridge seal to be used with liquids which are particularly aggressive and/or hot

Seal housing

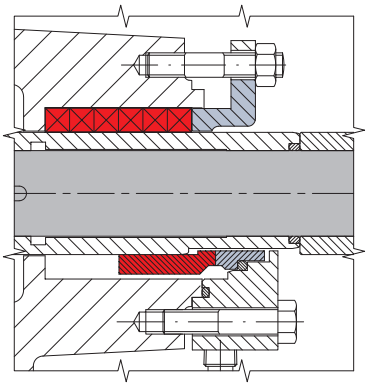

The pump is equipped with a (single if the version is HPA and HPMA) ball or roller bearing double support, designed to support the residual axial thrust produced by the impellers. The bearings can be grease lubricated or with oil with a specific lubrication chamber. On the "NDE" side there are 3 oblique ball bearings to compensate the impeller's natural thrust and any counterthrust. On the "DE" side a roller bearing is housed that allows any axial expansion of the shaft.

Bearings housing

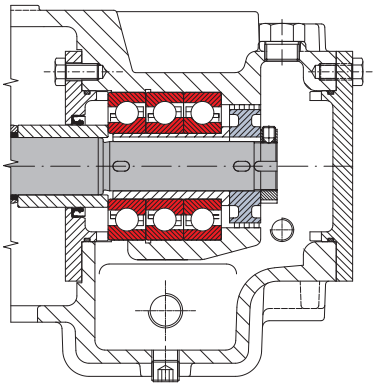

Available materials and executions

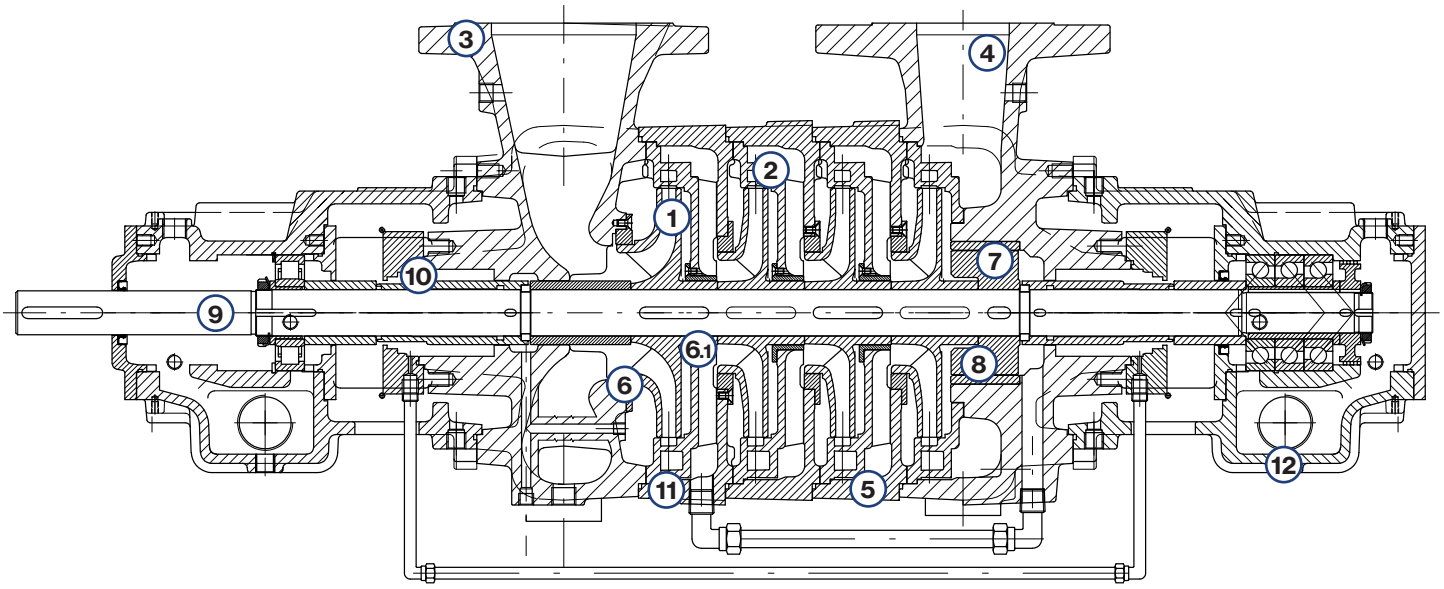

Ref.	Part description	Material Executions (**)		
		Cast Iron	S.S. AISI316	S.S. DUPLEX
1	**Impeller**	(*) EN (G G25) ASTM (A48 : Nr.35)	EN (X2CrNiMo1712) 1.4404 ASTM (316L)	EN (X2CrNiMoN22.5.3) 1.4462 ASTM (S1803)
2	**Diffuser**	(*) EN (G G25) ASTM (A48 : Nr.35)	EN (X2CrNiMo1712) 1.4404 ASTM (316L)	EN (X2CrNiMoN22.5.3) 1.4462 ASTM (S1803)
3	**Suction casing**	EN (G GG42) ASTM (A536 : Gr.65-A5-12)	EN (X2CrNiMo1712) 1.4404 ASTM (316L)	EN (X2CrNiMoN22.5.3) 1.4462 ASTM (S1803)
4	**Discarge casing**	EN (G GG42) ASTM (A536 : Gr.65-A5-12)	EN (X2CrNiMo1712) 1.4404 ASTM (316L)	EN (X2CrNiMoN22.5.3) 1.4462 ASTM (S1803)
5	**Stage casing**	EN (G GG42) ASTM (A536 : Gr.65-A5-12)	EN (X2CrNiMo1712) 1.4404 ASTM (316L)	EN (X2CrNiMoN22.5.3) 1.4462 ASTM (S1803)
6	**Impeller Wear ring**	EN (G Cu Sn 12) ASTM (B427 : C90800)	Stabil Peek ST530	
6.1	**Shaft Bushing**	On Request	Stabil Peek ST530	
7	**Balance drum**	EN (X 30 Cr13) ASTM (420)	EN (X2CrNiMo1712) 1.4404 ASTM (316L)	EN (X2CrNiMoN22.5.3) 1.4462 ASTM (S1803)
8	**Drum Wear Sleeve**	Absent	Stabil Peek ST530	
9	**Shaft**	EN (X 30 Cr13) ASTM (420)		EN (X2CrNiMoN22.5.3) 1.4462 ASTM (S1803)
10	**Seal System**	Gland Packing	**Mechanical Seal** Carb./SIC/EPDM	
11	**Pump O-Rings**	EPDM		
12	**Bearings housing**	EN (G G25) ASTM (A48 : Nr.35)		

(*) For these items Bronze and Stainless Steel AISI 316 materials are available on request.

(**) Special Materials and executions are available on request.

MARLY

Seal materials and types

The **mechanical seals** are standardized according to EN 12756 and available on “balanced” and “un-balanced” types, with model codes MG12 e H7N.

Model MG12 un-balanced and bi-directional
Materials and diam. “d1” for H75N are as per MG12

Burgmann mechanical seal
type MG12 un-balanced

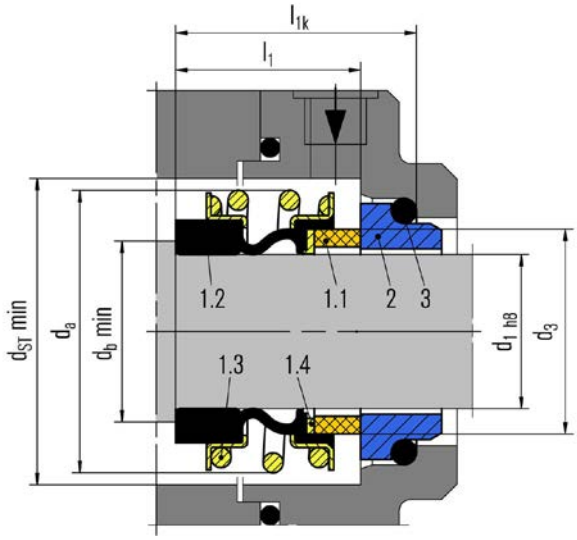

eMG12

Item Description

1.1 Seal face
1.2 Bellows
1.3 Set of springs
1.4 PEEK-PTFE disk
2 Seat (G6)
3 O-Ring or cup rubber

Mechanical seals materials

	POSITION 1.1 - 2	POSITION 1.2 - 3	POSITION 1.3
A	Antimony impregnated Carbon	E : EPDM	G : AISI 316
Q1	Silicon Carbide	V : FPM	

Available Materials Combinations : MG12 – H7N

TYPE	POSITION					TEMPERATURE (°C)
	1.1	2	1.2 - 3	1.3	1.4	
	Rotating Part	Stationary Part	Elastomers	Spring	Other Parts	
STANDARD MECHANICAL SEAL						
AQ1EGG	A	Q1	E	G	G	-30 +120
ON DEMAND MECHANICAL SEALS						
AQ1VGG	A	Q1	V	G	G	-10 +120
Q1Q1EGG	Q1	Q1	E	G	G	-30 +120
Q1Q1VGG	Q1	Q1	V	G	G	-10 +120

Dimensions mm.

Pump size	d_1	d_3	d_a	d_b	d_m	d_s	d_{st}	l	l_1	l_{1k}
HP 25	32	40.2	53.5	46.0	41	41	55	27.5	35.0	42.5
HP 32	40	48.8	62.0	55.0	55	49	64	30.0	36.0	45.0
HP 50	45	53.8	68.0	60.0	55	55	70	30.0	36.0	45.0
HP 80	50	58.8	74.0	65.0	60	60	77	30.5	38.0	47.5
HP 100	55	64.2	81.0	72.0	65	65	83	35.0	36.5	47.5
HP 125	70	80.0	99.5	90.0	82	82	103	40.0	48.7	60.0
HP 150 - 250	85	96.0	120.0	107.0	97	97	124	41.0	46.0	60.0

SEAL MATERIALS AND TYPES

Model H7N balanced and bi-directional
Materials and diamensions

Burgmann mechanical seal
type H7N balanced

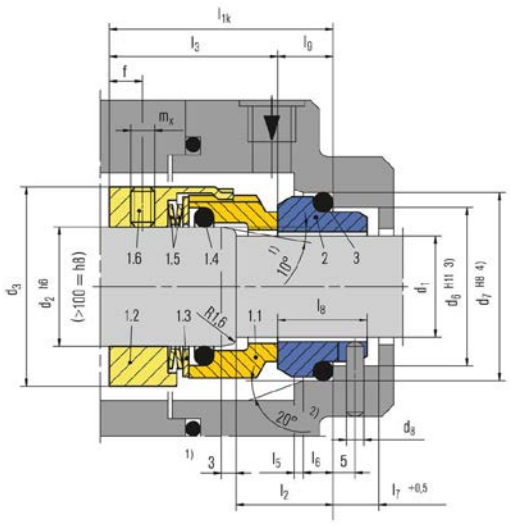

Item part no.to DIN 24250		Description
1.1	472	Seal face
1.2	485	Drive collar
1.3	474	Thrust ring
1.4	412,1	O-Ring
1.5	477	Spring
1.6	904	Set screw
2	475	Seat (G9)
3	212.2	O-Ring

Mechanical seals materials

	POSITION 1.1 - 2	POSITION 1.4 - 3	POSITION 1.2 - 1.3 - 1.5 - 1.6
A	Antimony impregnated Carbon	E : EPDM	G : AISI 316
Q1	Silicon Carbide	V : FPM	

Available Materials Combinations : MG12 – H7N

TYPE	POSITION					TEMPERATURE (°C)
	1.1	2	1.4 - 3	1.5	1.2 - 1.3 - 1.5 - 1.6	
	Rotating Part	Stationary Part	Elastomers	Spring	Other Parts	
STANDARD MECHANICAL SEAL						
AQ1EGG	A	Q1	E	G	G	-30 +120
ON DEMAND MECHANICAL SEALS						
AQ1VGG	A	Q1	V	G	G	-10 +120
Q1Q1EGG	Q1	Q1	E	G	G	-30 +120
Q1Q1VGG	Q1	Q1	V	G	G	-10 +120

Dimensions mm.

Pump size	d_1	d_2	d_3	d_6	d_7	d_8	d_s	l_{1k}	l1N	l_2	l_3	l_5	l_6	l_7	l_8	l_9	l_{39}	l_{40}	A	b	e	f	h_1	h_2	k	m_x
HP 25	32	38	55	42	48	3	59	50,0	65	20	38,5	2,0	5	9,0	19,5	11,5	24,5	9,0	24,0	6	8,0	8,0	6,6	22,6	9	M6
HP 32	40	45	62	51	58	4	66	52,5	75	23	38,5	2,0	6	9,0	22,0	14,0	26,0	11,0	24,0	6	8,0	8,0	6,6	22,6	9	M6
HP 50	45	50	67	56	63	4	71	52,5	75	23	38,5	2,0	6	9,0	22,0	14,0	26,0	11,0	24,0	6	8,0	8,0	6,6	22,6	9	M6
HP 80	50	55	72	62	70	4	76	57,5	85	25	42,5	2,5	6	9,0	23,0	15,0	26,5	12,5	24,0	6	8,0	8,0	6,6	22,6	9	M6
HP 100	55	60	81	67	75	4	85	57,5	85	25	42,5	2,5	6	9,0	23,0	15,0	28,5	12,5	26,0	8	8,0	9,0	6,6	24,6	11	M8
HP 125	70	75	99	83	92	4	105	70,0	95	28	52,0	2,5	7	9,0	26,0	18,0	30,5	14,5	26,0	8	8,0	10,0	6,6	24,6	11	M8
HP 150-250	85	90	114	100	110	4	119	75,0	105	28	56,8	3,0	7	9,0	26,2	18,2	30,2	14,0	26,0	10	8,0	10,0	6,6	24,6	11	M8

Flexible Coupling GTB type

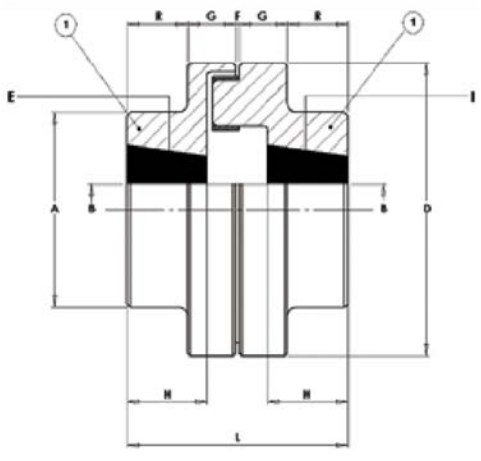

Type 18-114-120
Balancing on request

Type 127÷260
Standard balancing

E
External bush clamp

I
Internal bush clamp

TYPE	Coupling code	Tk_n	Tk_{max}	Max rpm	A	B min	B max	D	F	G	H	L	R	1 Half coupling code	Flexible element		Standard bore	Bush type		Kg
		Nm	Nm		mm										n°	Cod.	mm		Nm	
18	1018B01 I+I 1018B02 E+E 1018B03 I+E	132	396	6000	56	12	26	85	2	20	20	72	15	I - 3018B01 E - 3018B02	3	4080003	12-14-15-16-18-19-20-22-24-25-26	B2820 11.08	6	1,4
114	1114B01 I+I 1114B02 E+E 1114B03 I+E	166	498	5000	70	12	32	100	3	20	25	83	20	I - 3114B01 E - 3114B02	4	4080003	12-14-15-16-18-19-20-22-24-25-26-28-30-32	B3025 12.10	20	2,3
114	1114B13	166	498	5000	70	12	32	100	3	20	25	83	20	I - 3114B01	4	4080003	12-14-15-16-18-19-20-22-24-25-26-28-30-32	B3025 12.10	20	2,5
					88		42							E - 3114B03			12-14-15-16-18-19-20-22-24-25-26-28-30-32-35-38-40-42	B4025 16.10		
120	1120B01 I+I 1120B02 E+E 1120B03 I+E	323	969	4800	82	12	42	125	3	20	25	83	20	I - 3120B01 E - 3120B02	5	4080003	12-14-15-16-18-19-20-22-24-25-26-28-30-32-35-38-40-42	B4025 16.10	20	2,8
120	1120B18	323	969	4800	82	12	42	125	3	20	25	88	20	I - 3120B01	5	4080003	12-14-15-16-18-19-20-22-24-25-26-28-30-32-35-38-40-42	B4025 16.10	20	3,5
					105	15	50				30		25	E - 3120B03			16-18-19-20-22-24-25-26-28-30-32-35-38-40-42-45-48-50	B5030 20.12		
127	1127B01 I+I 1127B02 E+E 1127B03 I+E	402	1206	4000	102	16	50	145	3	27	30	95	19	I - 3127B01 E - 3127B02	5	4080004	16-18-19-20-22-24-25-26-28-30-32-35-38-40-42-45-48-50	B5030 20.12	30	5,4
140	1140B01 I+I 1140B02 E+E 1140B03 I+E	546	1638	3000	112	18	65	165	3	27	45	125	34	I - 3140B01 E - 3140B02	6	4080004	18-19-20-22-24-25-26-28-30-32-35-38-40-42-45-48-50-55-60-65	B6545 25.17	50	7,6
170	1170B01 I+I 1170B02 E+E 1170B03 I+E	855	2565	2900	142	25	75	204	3	29	50	135	37	I - 3170B01 E - 3170B02	8	4080004	25-26-28-30-32-35-38-40-42-45-48-50-55 60-65-70-75	B7550 30.20	90	13
210	1210B01 I+I 1210B02 E+E 1210B03 I+E	1396	4188	2900	142	25	75	245	3	32	50	135	34	I - 3210B01 E - 3210B02	10	4080004				17,5
260	1260B01 I+I 1260B02 E+E 1260B03 I+E	2100	6300	2200	172	45	90	284	3	34	90	215	72	I - 3260B01 E - 3260B02	12	4080004	45-48-50-55-60-65-70-75-80-85-90	B9090 35.35	110	34,5

In placing an order, please specify the coupling code, the diameter “B”, the clamp “I” or “E”.

Spacer Coupling GTBD type

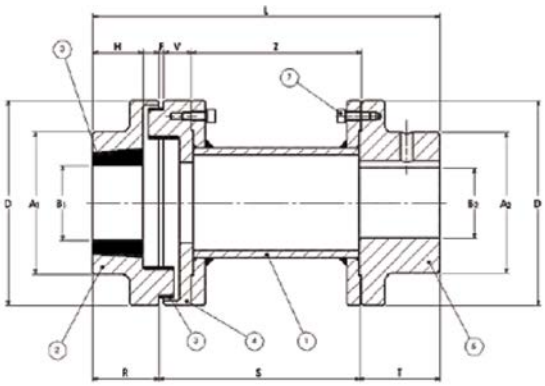

Pump side Motor side

Overall code	Type	Tk_n	Tk_{max}	Max rpm	DIMENSIONS													1	2	3	4	5	6	7	Tightening torque
					D	A1	A2	B1 max	B2 max	F	V	H	R	S	T	L	Z	Spacer	Hub	Bush	Flange	Insert	Motor side hub	Screws	
		Nm			mm																				Nm
1018B04	18	132	396	6000	85	56	55	26	32	5	18,5	20	35	100	45	180	78	0000001	I-3018B01	B2820	0018001	4080003	3018003	N° 6 M8×22	26
1018B05					85	56	55	26	32	5	18,5	20	35	100	45	180	78	0000001	E-3018B02						
1018B06					85	56	55	26	32	5	18,5	20	35	140	45	220	118	0000002	I-3018B01						
1018B07					85	56	55	26	32	5	18,5	20	35	140	45	220	118	0000002	E-3018B02						
1114B04	114	166	498	5000	100	70	70	32	42	5	18,5	25	40	100	45	185	78	0000003/1	I-3114B01	B3025	0114003	4080003	3114003	N° 8 M8×22	26
1114B05					100	70	70	32	42	5	18,5	25	40	100	45	185	78	0000003/1	E-3114B02						
1114B06					100	70	70	32	42	5	18,5	25	40	140	45	255	118	0000004/1	I-3114B01						
1114B07					100	70	70	32	42	5	18,5	25	40	140	45	255	118	0000004/1	E-3114B02						
1120B04	120	323	969	4800	125	82	90	42	55	5	18,5	25	40	100	50	190	78	0000005/1	I-3120B01	B4025	0120004	4080003	3120004	N° 10 M8×22	26
1120B05					125	82	90	42	55	5	18,5	25	40	100	50	190	78	0000005/1	E-3120B02						
1120B06					125	82	90	42	55	5	18,5	25	40	140	50	230	118	0000006/1	I-3120B01						
1120B07					125	82	90	42	55	5	18,5	25	40	140	50	230	118	0000006/1	E-3120B02						
1120B08					125	82	90	42	55	5	18,5	25	40	180	50	270	158	0000007/1	I-3120B01						
1127B12	127	402	1206	4000	145	102	100	50	65	5	25,5	30	46	100	70	216	71	0000017	I-3127B01	B5030	0127006	4080004	3127002	N° 610 M8×25	N° 610 M8x25
1127B13					145	102	100	50	65	5	25,5	30	46	100	70	216	71	0000017	E-3127B02						
1127B14					145	102	100	50	65	5	25,5	30	46	100	70	256	111	0000018	I-3127B01						
1127B15					145	102	100	50	65	5	25,5	30	46	100	70	256	111	0000018	E-3127B02						
1127B16					145	102	100	50	65	5	25,5	30	46	100	70	296	151	0000019	I-3127B01						
1127B17					145	102	100	50	65	5	25,5	30	46	100	70	296	151	0000019	E-3127B02						
1127B18					145	102	100	50	65	5	25,5	30	46	100	70	316	171	0000022	I-3127B01						
1140B14	140	546	1638	3000	165	112	110	65	65	5	25,5	45	61	100	65	226	71	0000009	I-3140B01	B6545	0140007	4080004	3140005	N° 12 M8×25	26
1140B15					165	112	110	65	65	5	25,5	45	61	100	65	226	71	0000009	E-3140B02						
1140B16					165	112	110	65	65	5	25,5	45	61	140	65	266	111	0000010	I-3140B01						
1140B17					165	112	110	65	65	5	25,5	45	61	140	65	266	111	0000010	E-3140B02						
1170B12	170	855	2565	2900	204	142	140	75	85	5	27,5	50	66	140	80	286	109	0000013	I-3170B01	B7550	0170006	4080004	3170005	N° 16 M8×25	26
1170B13					204	142	140	75	85	5	27,5	50	66	140	80	286	109	0000013	E-3170B02						
1170B14					204	142	140	75	85	5	27,5	50	66	200	80	346	169	0000014	I-3170B01						
1170B15					204	142	140	75	85	5	27,5	50	66	200	80	346	169	0000014	E-3170B02						
1170B16					204	142	140	75	85	5	27,5	50	66	250	80	396	219	0000015	I-3170B01						
1210B08	210	1396	4188	2900	245	142	165	75	100	5	30,5	50	66	250	110	426	216	0000016	I-3210B01	B9090	0210004	4080004	3210006	N° 20 M8×30	26
1210B09					245	142	165	75	100	5	30,5	50	66	250	110	426	216	0000016	E-3210B02						

Constructive feature and operative data

HP-HPA																							
PUMP SIZE	25.1 INOX	25.2	25.2 INOX	32.2	32.2 INOX	50.2	50.4	50.6	80.2	80.4	80.6	100.2	100.4	100.6	125.2	125.4	125.6	150.2	150.4	150.6	250.2	250.4
Max suction pressure	16 bar																					
Max delivery pressure	63 bar																					
Max liquid temperature	120°C (90°C with gland paking)																					
Ball bearing lubrication	grease																					
Shaft projection diameter	18			28		32			38			42			55			70			70	
P/n (KW/1') - shaft AISI 420	0,0100			0,0475		0,0745			0,135			0,186			0,373			0,745			0,745	
P/n (KW/1') - shaft AISI 316	0,0077			0,0365		0,0575			0,104			0,143			0,287			0,573			0,573	
Ball bearing side drive	NU 306			NU 307		NU 308			NU 309			NU 310			NU 314			NU 317			NU 317	
Ball bearing side end drive	3306 × 2			7307 × 2		7308 × 2			7309 × 2			7310 × 2			7314 × 2			7317 × 2			7317 × 2	
				6306		6307			6308			6309			6312			6315			6315	
Gland packing diameter (mm)	35			45		50			55			61			75			90			90	
Gland packing section	8 × 8			10 × 10		10 × 10			10 × 10			12 × 12			14 × 14			16 × 16			16 × 16	
No. Gland packing rings	4			5		6			6			5			5			5			5	
Type Gland packing max 25 bar	cotton graphite impregnated braide																					
Type Gland packing > 25 bar	teflon graphite impregnated braide																					
Mechanical seal diameter	32			40		45			50			55			70			85			85	
Max number stage 3000 rpm	20	20	19	13	13	11	10	10	8	8	8	6	6	6	4	4	4	2	2	2	-	-
Max number stage 1500 rpm	25	25	25	25	25	20	20	20	18	18	18	16	16	16	12	12	12	10	10	9	8	5

CONSTRUCTIVE FEATURE AND OPERATIVE DATA

HPM-HPMA																						
PUMP SIZE	25.1 INOX	25.2	25.2 INOX	32.2	32.2 INOX	50.2	50.4	50.6	80.2	80.4	80.6	100.2	100.4	100.6	125.2	125.4	125.6	150.2	150.4	150.6	250.2	250.4
Max suction pressure	16 bar																					
Max delivery pressure	63 bar																					
Max liquid temperature	140°C (90°C with gland paking)																					
Ball bearing lubrication	oil																					
Ball bearing cooling	> 100°C																					
Shaft projection diameter	20			28		32			38			42			55			70			70	
P/n (KW/1') - shaft AISI 420	0,0155			0,0475		0,0745			0,135			0,186			0,373			0,745			0,745	
P/n (KW/1') - shaft AISI 316	0,0120			0,0365		0,0575			0,104			0,143			0,287			0,573			0,573	
Ball bearing side drive	NU 306			NU 307		NU 308			NU 309			NU 310			NU 314			NU 317			NU 317	
Ball bearing side end drive	7306 × 2			7307 × 2		7308 × 2			7309 × 2			7310 × 2			7314 × 2			7317 × 2			7317 × 2	
Gland packing diameter	35			45		50			55			61			75			90			90	
Gland packing section	8 × 8			10 × 10		10 × 10			10 × 10			12 × 12			14 × 14			16 × 16			16 × 16	
No. Gland packing rings	4			5		6			6			5			5			5			5	
Type Gland packing	teflon graphite impregnated braide																					
Mechanical seal diameter	32			40		45			50			55			70			85			85	
Max number stage 3000 rpm	20	20	19	13	13	11	10	10	8	8	8	6	6	6	4	4	4	2	2	2	-	-
Max number stage 1500 rpm	25	25	25	25	25	20	20	20	18	18	18	16	16	16	12	12	12	10	10	9	8	5

HPR																	
TYPE	32.2	32.2 INOX	50.2	50.4	50.6	80.2	80.4	80.6	100.2	100.4	100.6	125.2	125.4	125.6	150.2	150.4	150.6
Max suction pressure	25 bar																
Max delivery pressure	100 bar																
Max liquid temperature	180°C																
Ball bearing lubrication	oil																
Ball bearing cooling	> 100°C																
Cooling casing	> 140°C																
Shaft projection diameter	28		32			38			42			55			70		
P/n (KW/1') - shaft AISI 420	0,0475		0,0745			0,135			0,186			0,373			0,745		
P/n (KW/1') - shaft AISI 316	0,0365		0,0575			0,104			0,143			0,287			0,573		
Ball bearing side drive	NU 307		NU 308			NU 309			NU 310			NU 314			NU 317		
Ball bearing side end drive	7307 × 3		7308 × 3			7309 × 3			7310 × 3			7314 × 3			7317 × 2		
Mechanical seal diameter	40		45			50			55			70			85		
Max number stage 3000 rpm	20	20	17	16	14	13	13	12	10	10	8	5	5	5	4	4	3
Max number stage 1500 rpm	25	25	20	20	20	18	18	18	16	16	16	12	12	12	11	11	10

CONSTRUCTIVE FEATURE AND OPERATIVE DATA

HV																							
TYPE	25.1 INOX	25.2	25.2 INOX	32.2	32.2 INOX	50.2	50.4	50.6	80.2	80.4	80.6	100.2	100.4	100.6	125.2	125.4	125.6	150.2	150.4	150.6	250.2	250.4
Max suction pressure	16 bar																					
Max delivery pressure	63 bar																					
Max liquid temperature	100°C																					
Ball bearing lubrication	grease																					
Shaft projection diameter	18			22		28			32			38			52			65			65	
P/n (KW/1') - shaft AISI 420	0,0100			0,0220		0,0475			0,0745			0,135			0,305			0,542			0,542	
P/n (KW/1') - shaft AISI 316	0,0077			0,0169		0,0365			0,0575			0,104			0,235			0,417			0,417	
Ball bearing side drive	3306 × 2			7307 × 2		7308 × 2			7309 × 2			7310 × 2			7314 × 2			7317 × 2			7317 × 2	
Ball bearing side end drive	bronze drive bush																					
Gland packing diameter	35			45		50			55			61			75			90			90	
Gland packing section	8 × 8			10 × 10		10 × 10			10 × 10			12 × 12			14 × 14			16 × 16			16 × 16	
Gland packing section	4			5		6			6			5			5			5			5	
Mechanical seal diameter	32			40		45			50			55			70			85			85	
Max number stage 3000 rpm	14	14	14	11	11	9	9	9	7	7	7	6	6	6	4	4	4	2	2	2	-	-
Max number stage 1500 rpm	14	14	14	11	11	10	10	10	8	8	8	6	6	6	5	5	5	4	4	4	2	2

HP-HPM-HPR design variations

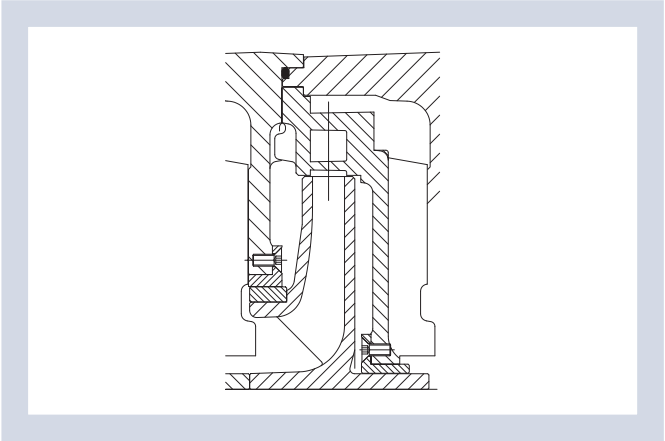

Possible wear rings:
single or double on casings, impellers and diffusers

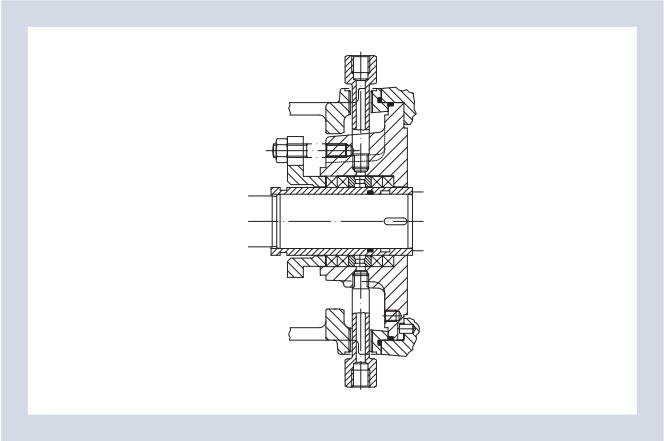

Gland packing cooling

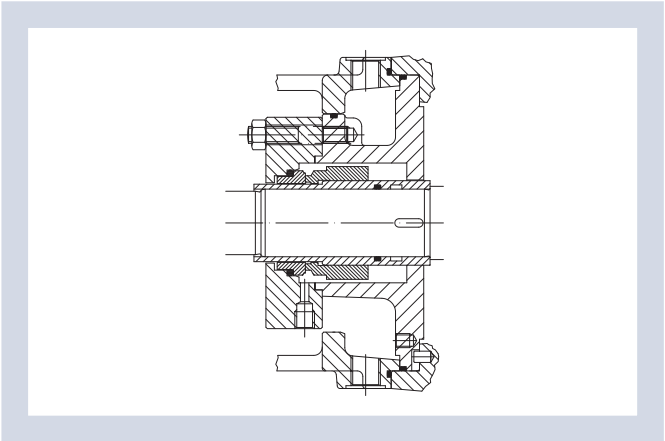

Mechanical seal with coal chamber

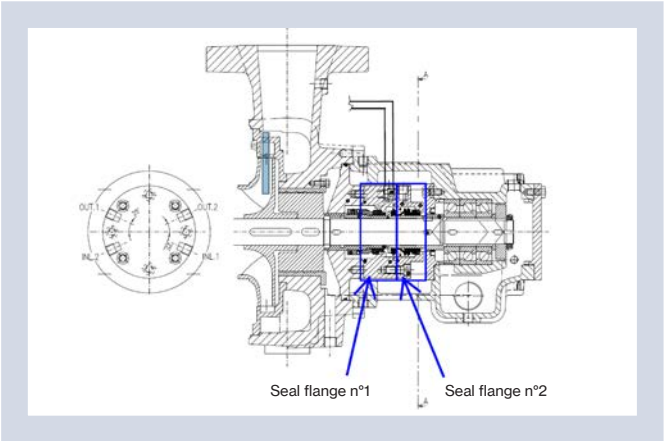

Double seal system as per Plan 55

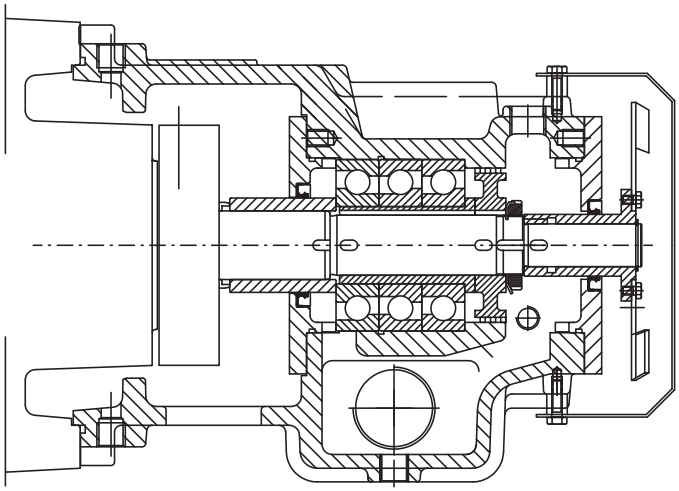

Oil bearing fan cooling

Name key

HPMA 80.6 / 8 R - X - ___ - 30 - 4 - 6

- Frequency
  - 50Hz
  - **6** 60Hz
- N° poles of motor
  - 2 poles
  - **4** 4 poles
- Version
  - without motor
  - **30** with 30kW motor (decimals are not shown)
  - **E** with diesel engine
- Seal O-rings material
  - standard (EPDM)
  - **V** Viton
  - **K** Kalrez
- Seal faces material
  - standard (graphite-SiC)
  - **2** SiC-SiC
  - **4** widia-widia
- Seal type
  - gland packing
  - **T** mechanical seal
  - **TB** balanced mechanical seal
- Main pump wet parts:
  - cast iron
  - **X** AISI 316
  - **D** Duplex
  - **SD** super Duplex
  - **GB** cast iron with bronze impeller and/or diffuser
  - **GX** cast iron with AISI316 impeller and/or diffuser
- Impeller size
  - nominal
  - **R** reduced
  - **M** greater than nominal
- Number of stages
- Hydraulic size
- Nominal delivery pump flange size
- Suction pump body
  - radial flange
  - **A** axial flange type
- Pump features
  - standard construction - grease lubrication
  - **M** standard construction - oil lubrication
  - **R** high pressure construction - oil lubrication
- **HP** horizontal
- **HV** vertical

PERFORMANCE CURVES

4 POLES

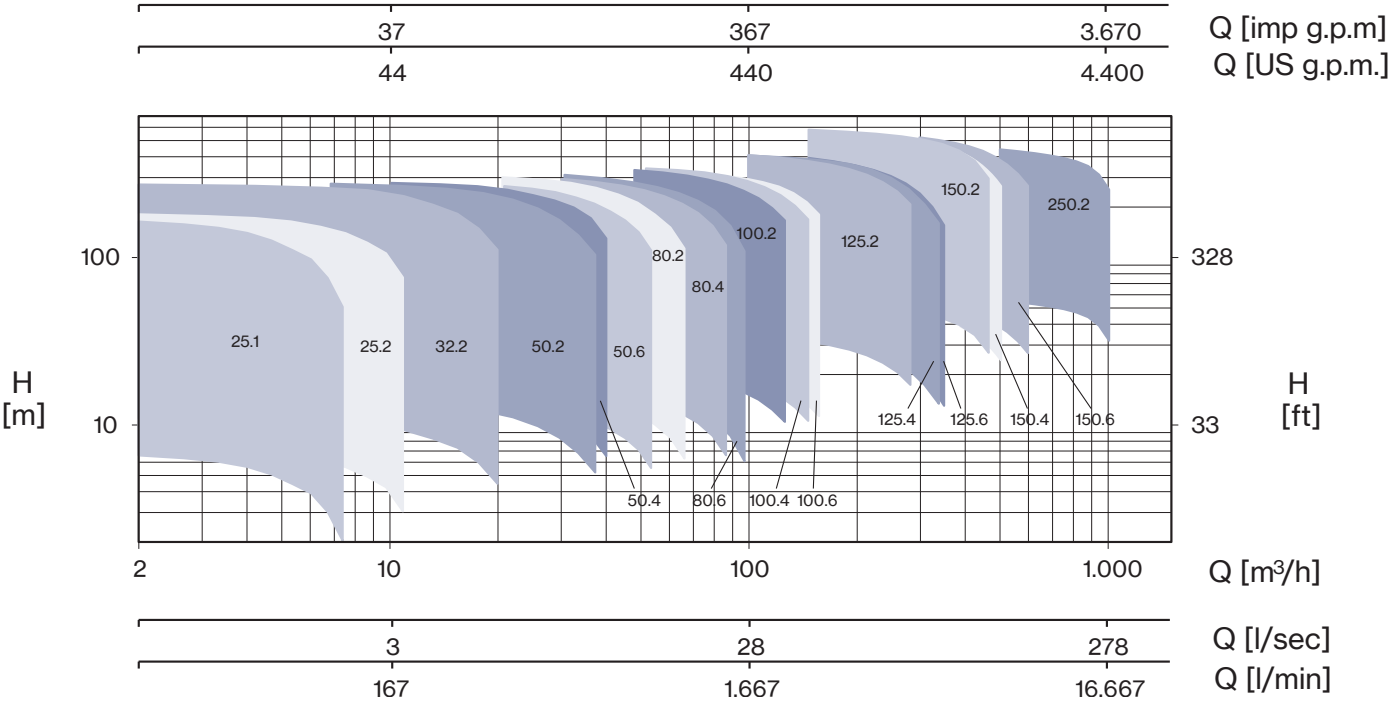
37
367
3.670
Q [imp g.p.m]
44
440
4.400
Q [US g.p.m.]
100
10
H
[m]
328
33
H
[ft]
25.1
25.2
32.2
50.2
50.6
80.2
80.4
100.2
125.2
150.2
250.2
50.4
80.6
100.4
100.6
125.4
125.6
150.4
150.6
2
10
100
1.000
Q [m³/h]
3
28
278
Q [l/sec]
167
1.667
16.667
Q [l/min]

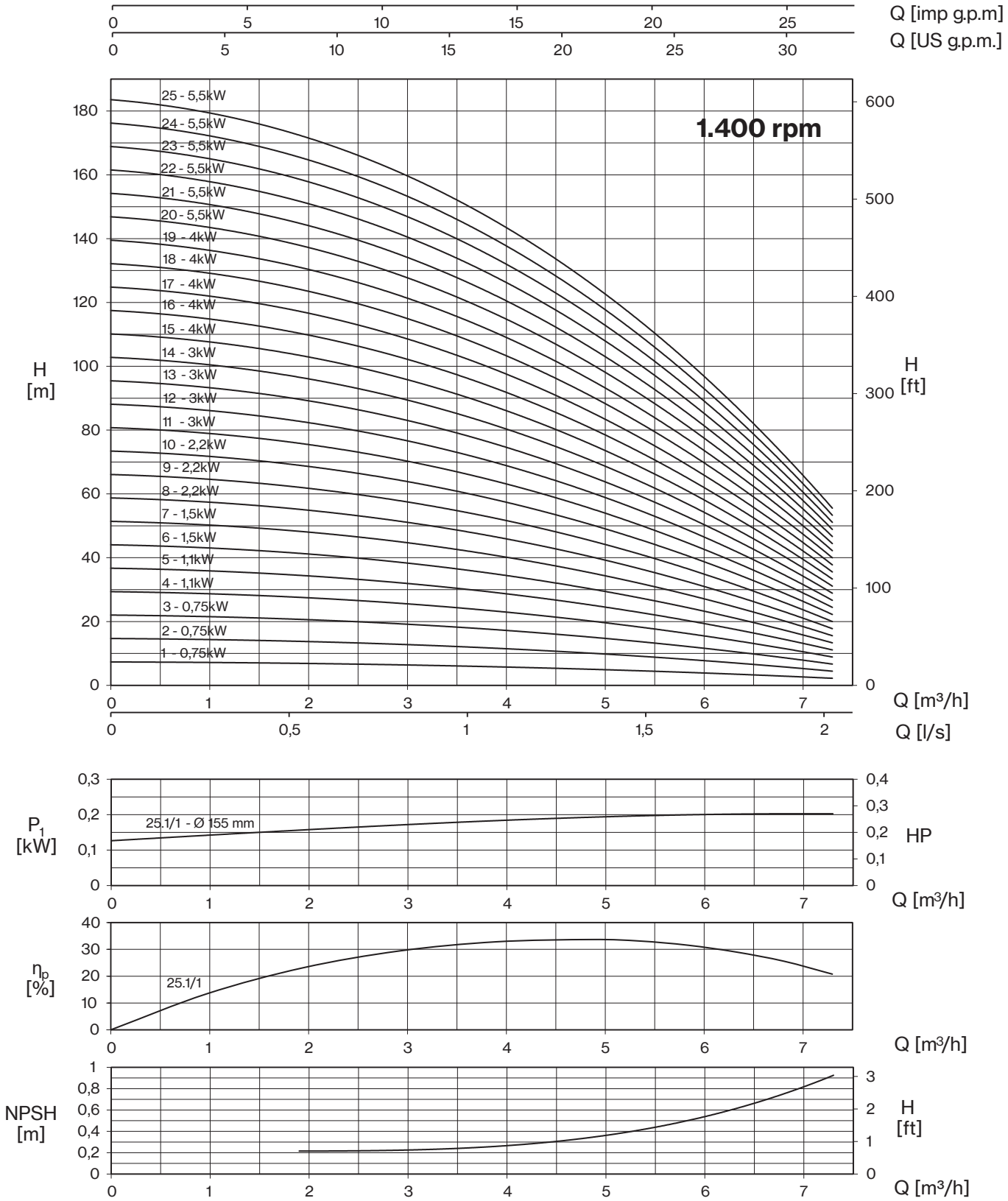
Q [imp g.p.m]
Q [US g.p.m.]
1.400 rpm
25 - 5,5kW
24 - 5,5kW
23 - 5,5kW
22 - 5,5kW
21 - 5,5kW
20 - 5,5kW
19 - 4kW
18 - 4kW
17 - 4kW
16 - 4kW
15 - 4kW
14 - 3kW
13 - 3kW
12 - 3kW
11 - 3kW
10 - 2,2kW
9 - 2,2kW
8 - 2,2kW
7 - 1,5kW
6 - 1,5kW
5 - 1,1kW
4 - 1,1kW
3 - 0,75kW
2 - 0,75kW
1 - 0,75kW
H [m]
H [ft]
Q [m³/h]
Q [l/s]
P1 [kW]
HP
25.1/1 - Ø 155 mm
ηp [%]
25.1/1
NPSH [m]

25.2
Performance curves

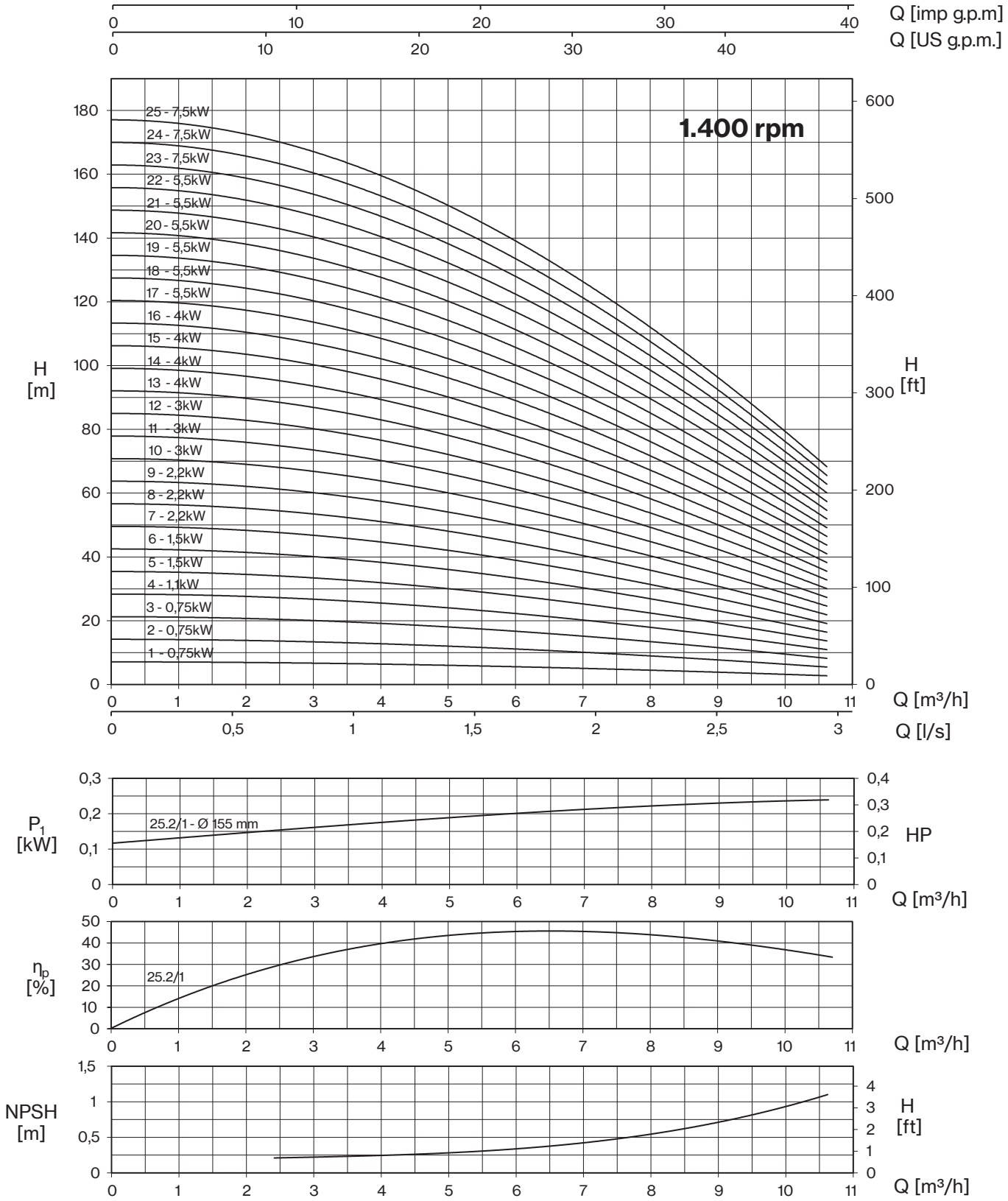

Valid for: p=1 (kg/dm³), viscosity ≤ 20 mm²/sec) - Guarantee values according to ISO 9906, Grade 3B - Head based on SG = 1,000

MARLY

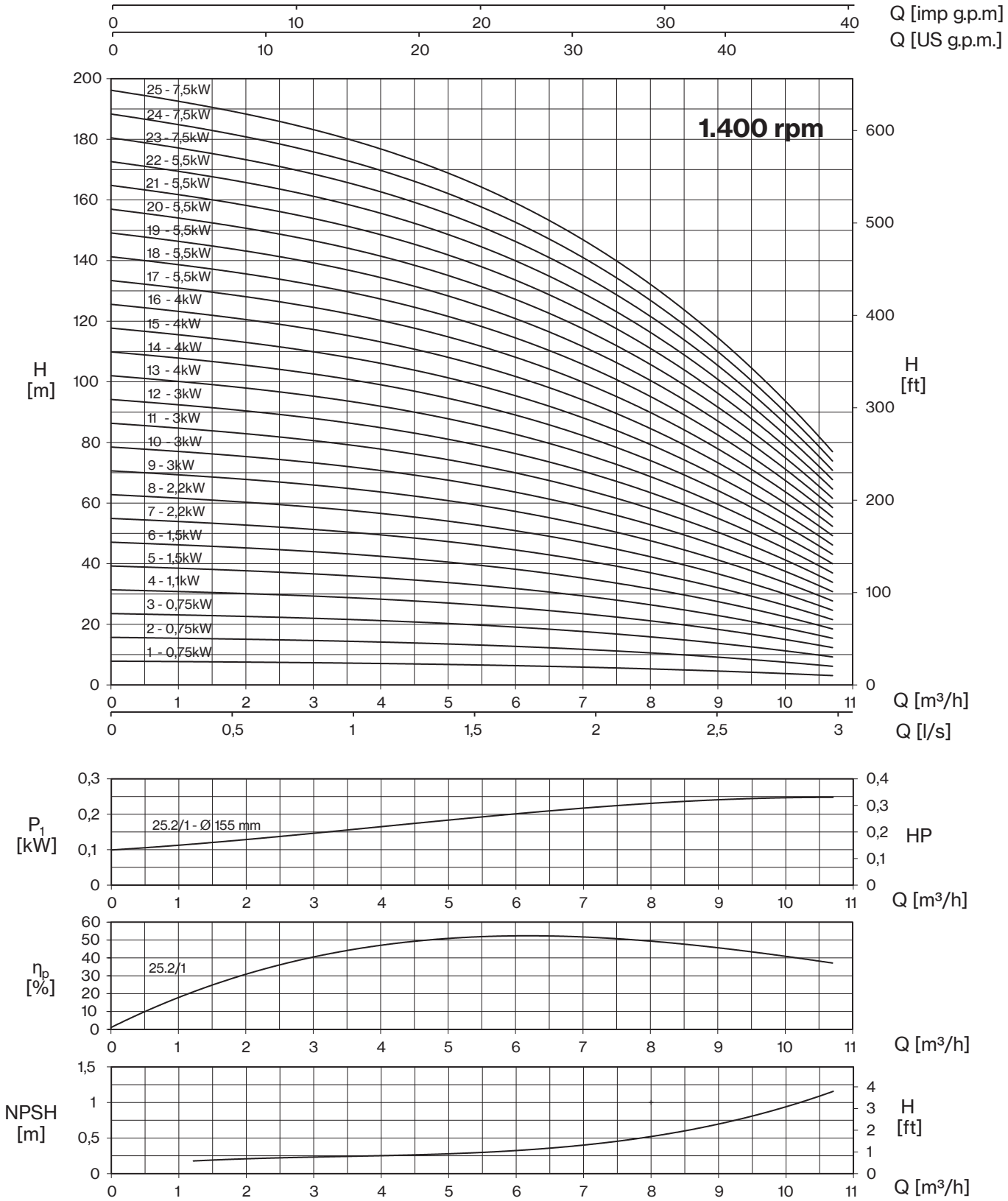
Q [imp g.p.m]
Q [US g.p.m.]
1.400 rpm
25 - 7,5kW
24 - 7,5kW
23 - 7,5kW
22 - 5,5kW
21 - 5,5kW
20 - 5,5kW
19 - 5,5kW
18 - 5,5kW
17 - 5,5kW
16 - 4kW
15 - 4kW
14 - 4kW
13 - 4kW
12 - 3kW
11 - 3kW
10 - 3kW
9 - 3kW
8 - 2,2kW
7 - 2,2kW
6 - 1,5kW
5 - 1,5kW
4 - 1,1kW
3 - 0,75kW
2 - 0,75kW
1 - 0,75kW
H [m]
H [ft]
Q [m³/h]
Q [l/s]
P1 [kW]
HP
25.2/1 - Ø 155 mm
ηp [%]
25.2/1
NPSH [m]

32.2
Performance curves

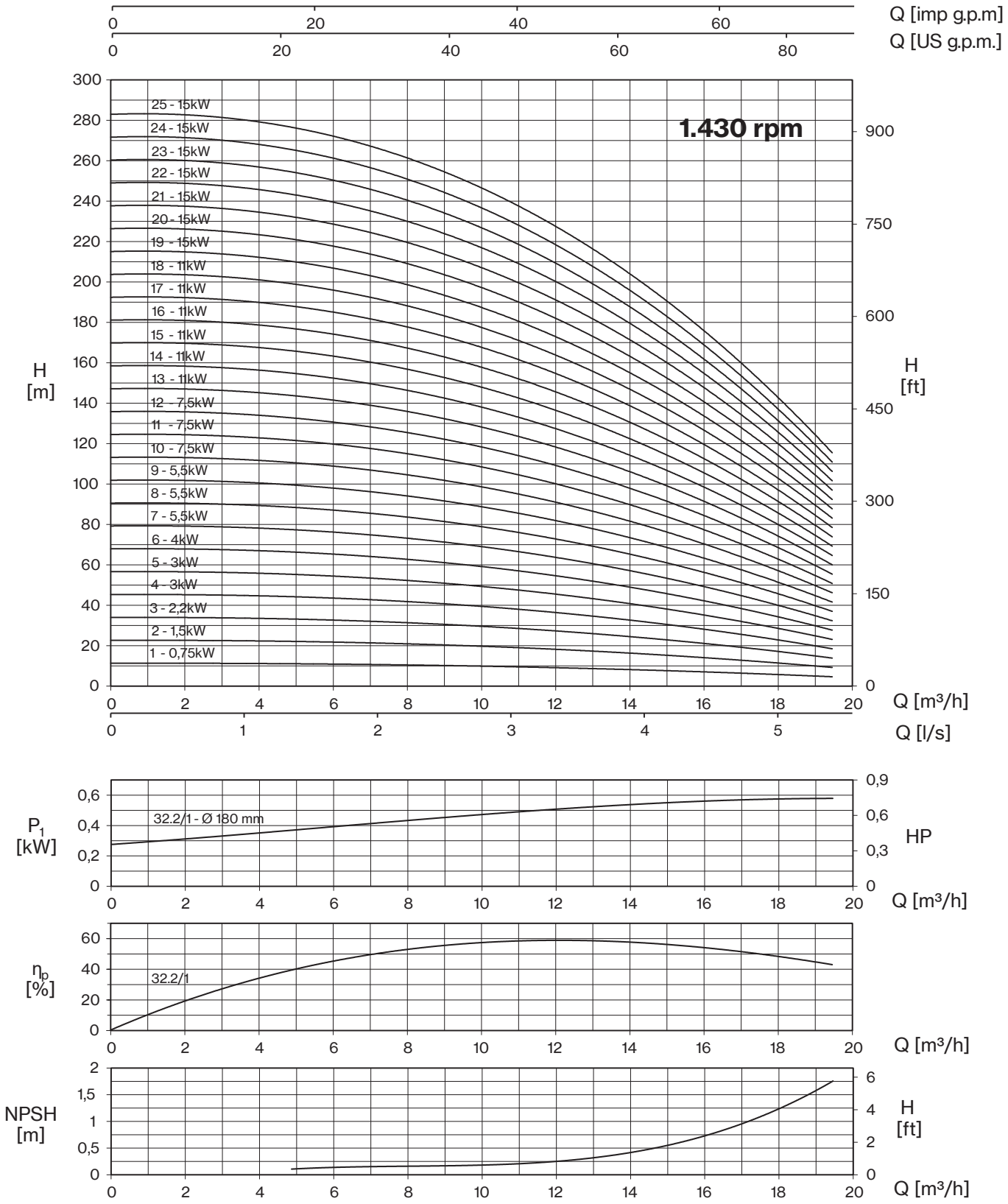

Valid for: p=1 (kg/dm³), viscosity ≤ 20 mm²/sec) - Guarantee values according to ISO 9906, Grade 3B - Head based on SG = 1,000

MARLY

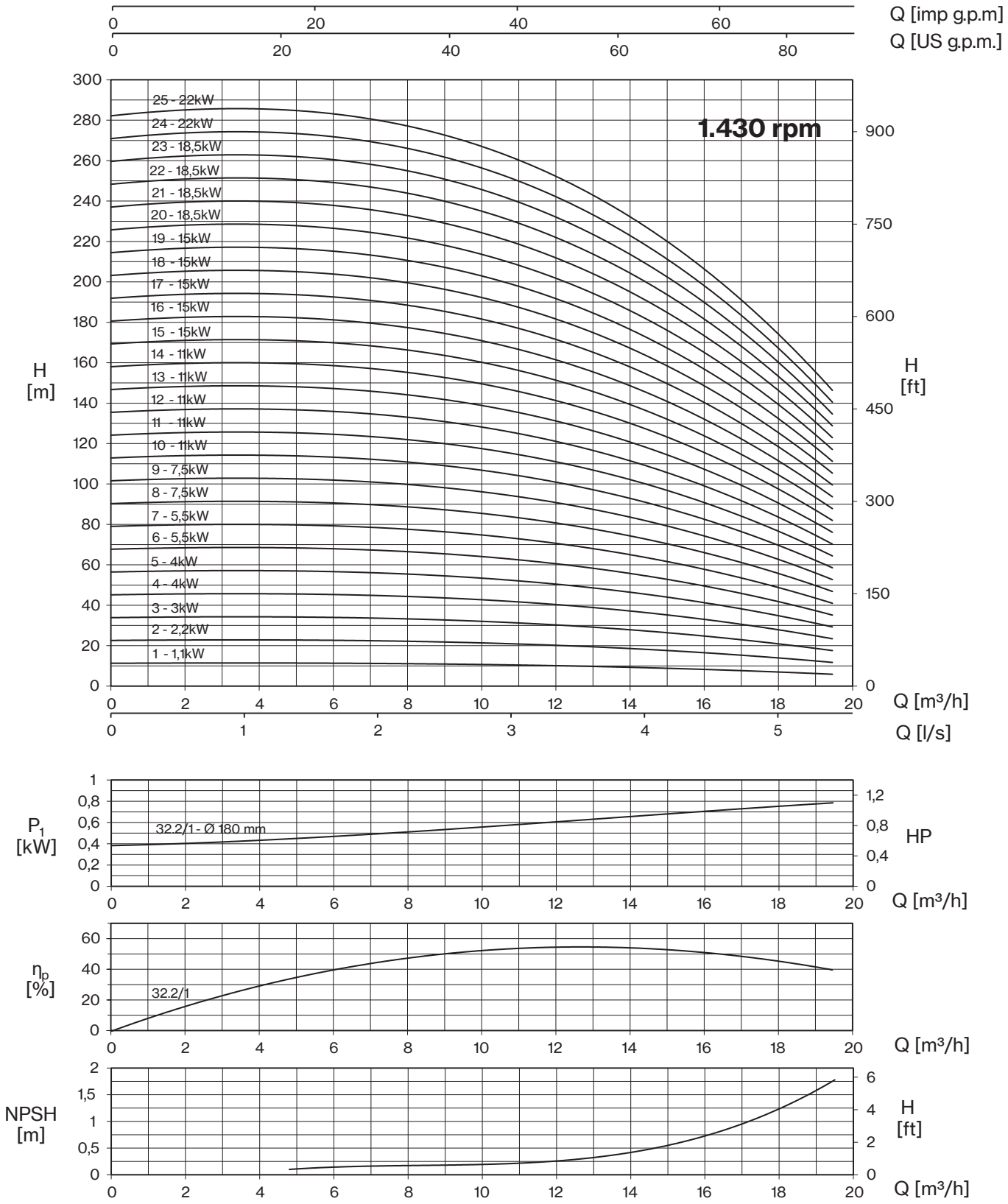
Q [imp g.p.m]
Q [US g.p.m.]
H [m]
H [ft]
1.430 rpm
25 - 22kW
24 - 22kW
23 - 18,5kW
22 - 18,5kW
21 - 18,5kW
20 - 18,5kW
19 - 15kW
18 - 15kW
17 - 15kW
16 - 15kW
15 - 15kW
14 - 11kW
13 - 11kW
12 - 11kW
11 - 11kW
10 - 11kW
9 - 7,5kW
8 - 7,5kW
7 - 5,5kW
6 - 5,5kW
5 - 4kW
4 - 4kW
3 - 3kW
2 - 2,2kW
1 - 1,1kW
Q [m³/h]
Q [l/s]
P1 [kW]
HP
32.2/1 - Ø 180 mm
ηp [%]
32.2/1
NPSH [m]

50.2
Performance curves

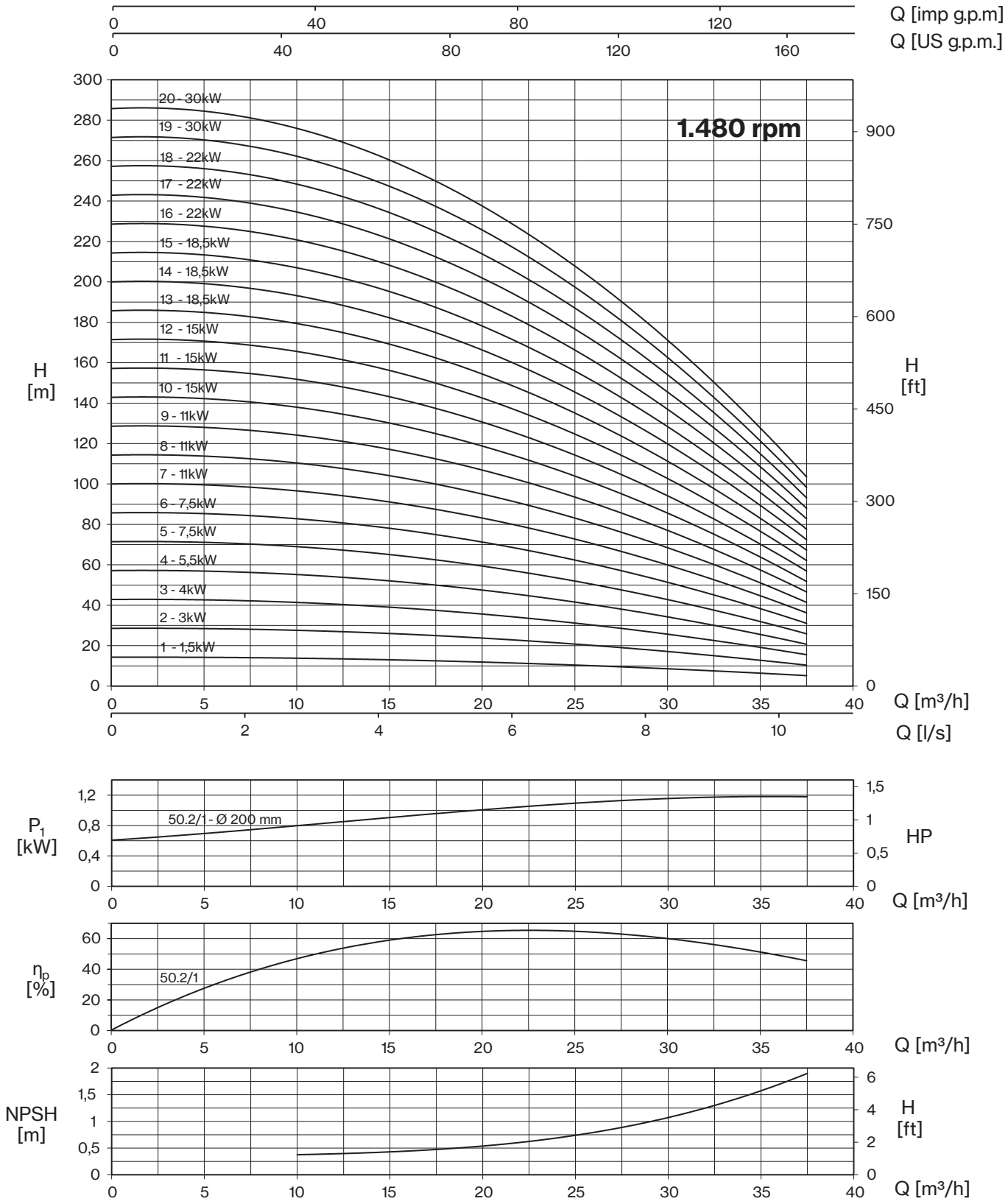

Valid for: p=1 (kg/dm³), viscosity ≤ 20 mm²/sec) - Guarantee values according to ISO 9906, Grade 3B - Head based on SG = 1,000

MARLY

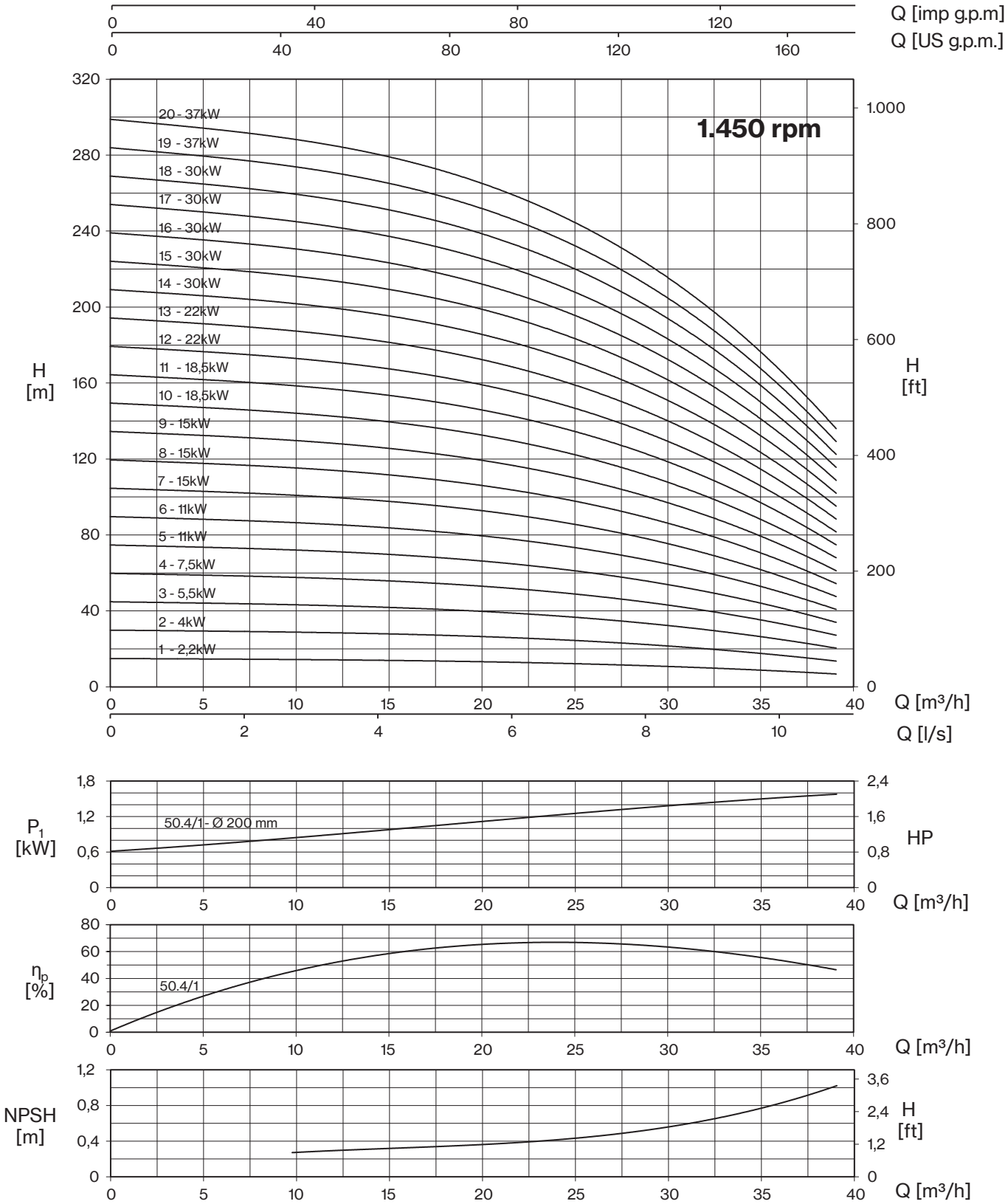
Q [imp g.p.m]
Q [US g.p.m.]
1.450 rpm
20 - 37kW
19 - 37kW
18 - 30kW
17 - 30kW
16 - 30kW
15 - 30kW
14 - 30kW
13 - 22kW
12 - 22kW
11 - 18,5kW
10 - 18,5kW
9 - 15kW
8 - 15kW
7 - 15kW
6 - 11kW
5 - 11kW
4 - 7,5kW
3 - 5,5kW
2 - 4kW
1 - 2,2kW
H [m]
H [ft]
Q [m³/h]
Q [l/s]
P1 [kW]
HP
50.4/1- Ø 200 mm
ηp [%]
50.4/1
NPSH [m]

50.6
Performance curves

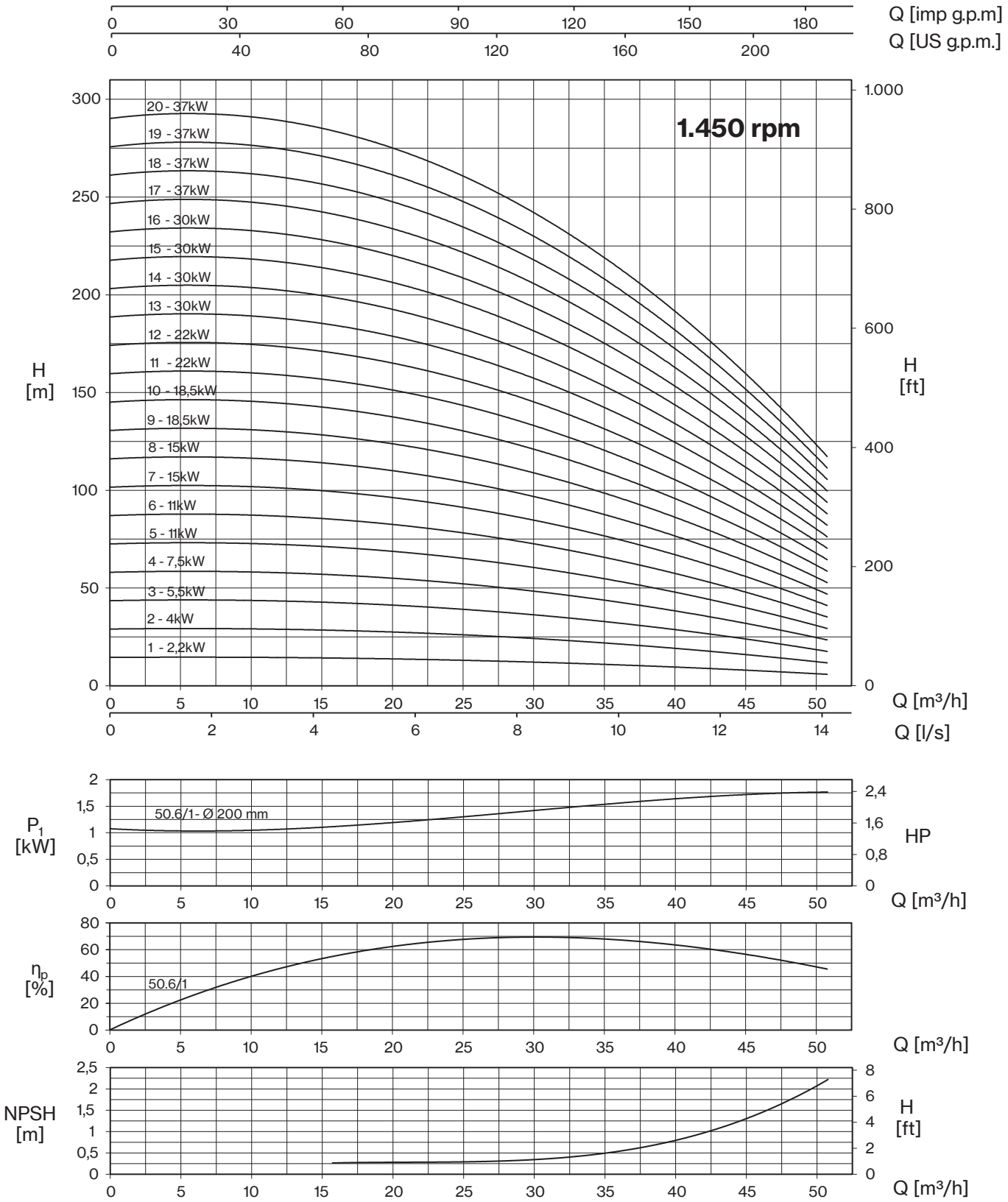

Valid for: p=1 (kg/dm³), viscosity ≤ 20 mm²/sec) - Guarantee values according to ISO 9906, Grade 3B - Head based on SG = 1,000

MARLY

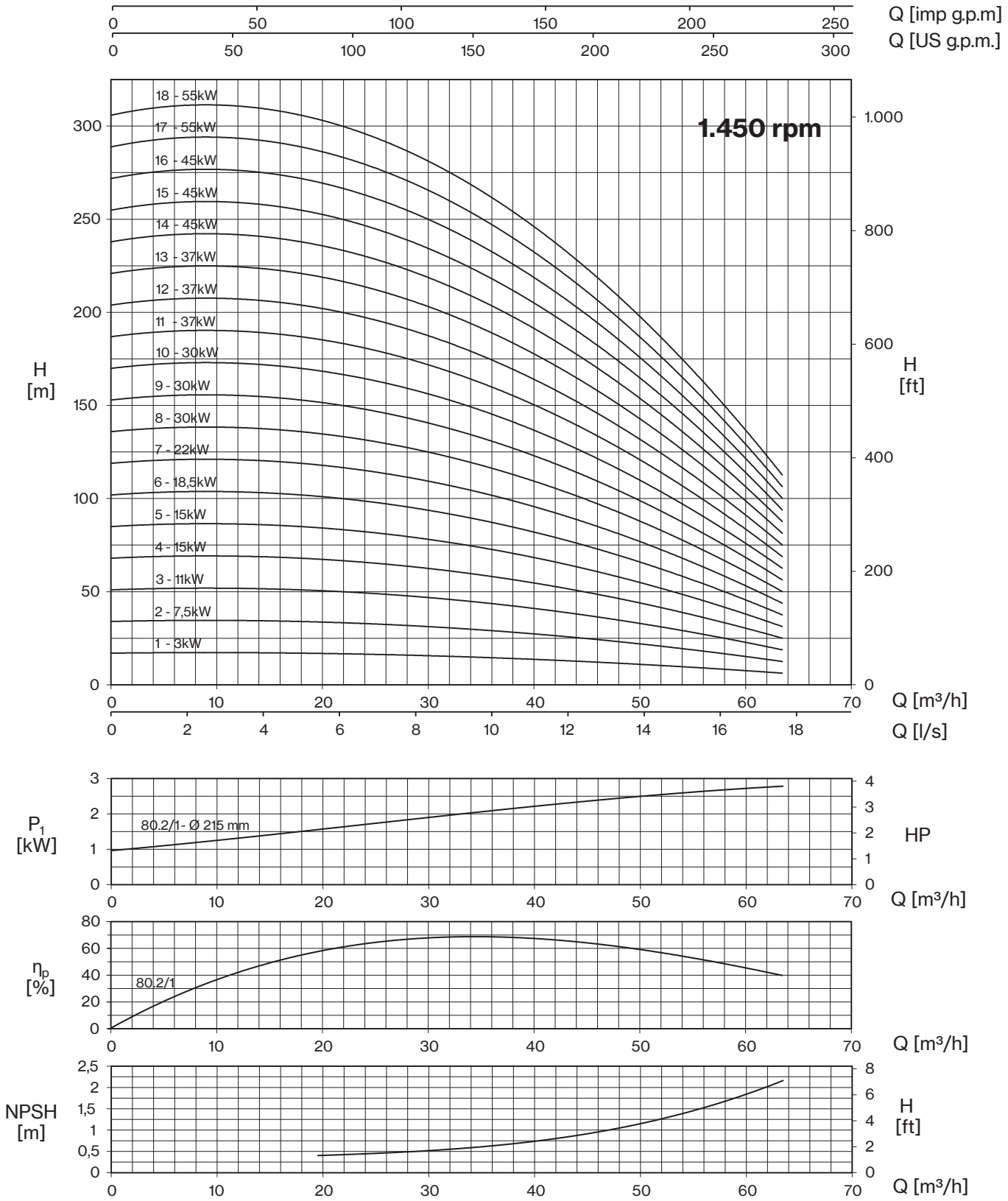
Q [imp g.p.m]
Q [US g.p.m.]
1.450 rpm
18 - 55kW
17 - 55kW
16 - 45kW
15 - 45kW
14 - 45kW
13 - 37kW
12 - 37kW
11 - 37kW
10 - 30kW
9 - 30kW
8 - 30kW
7 - 22kW
6 - 18,5kW
5 - 15kW
4 - 15kW
3 - 11kW
2 - 7,5kW
1 - 3kW
H [m]
H [ft]
Q [m³/h]
Q [l/s]
P1 [kW]
HP
80.2/1- Ø 215 mm
ηp [%]
80.2/1
NPSH [m]

80.4
Performance curves

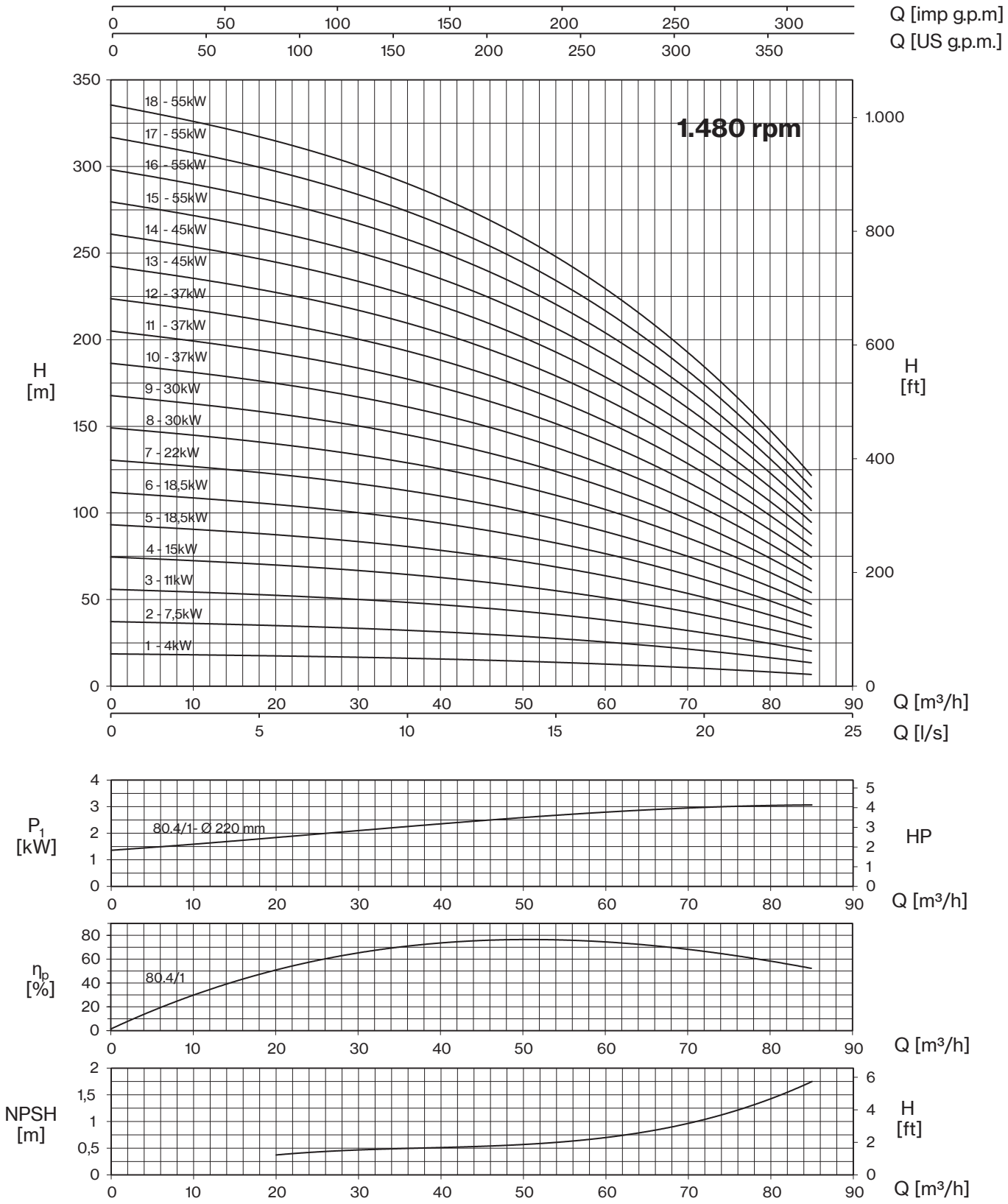

Valid for: p=1 (kg/dm³), viscosity ≤ 20 mm²/sec) - Guarantee values according to ISO 9906, Grade 3B - Head based on SG = 1,000

MARLY

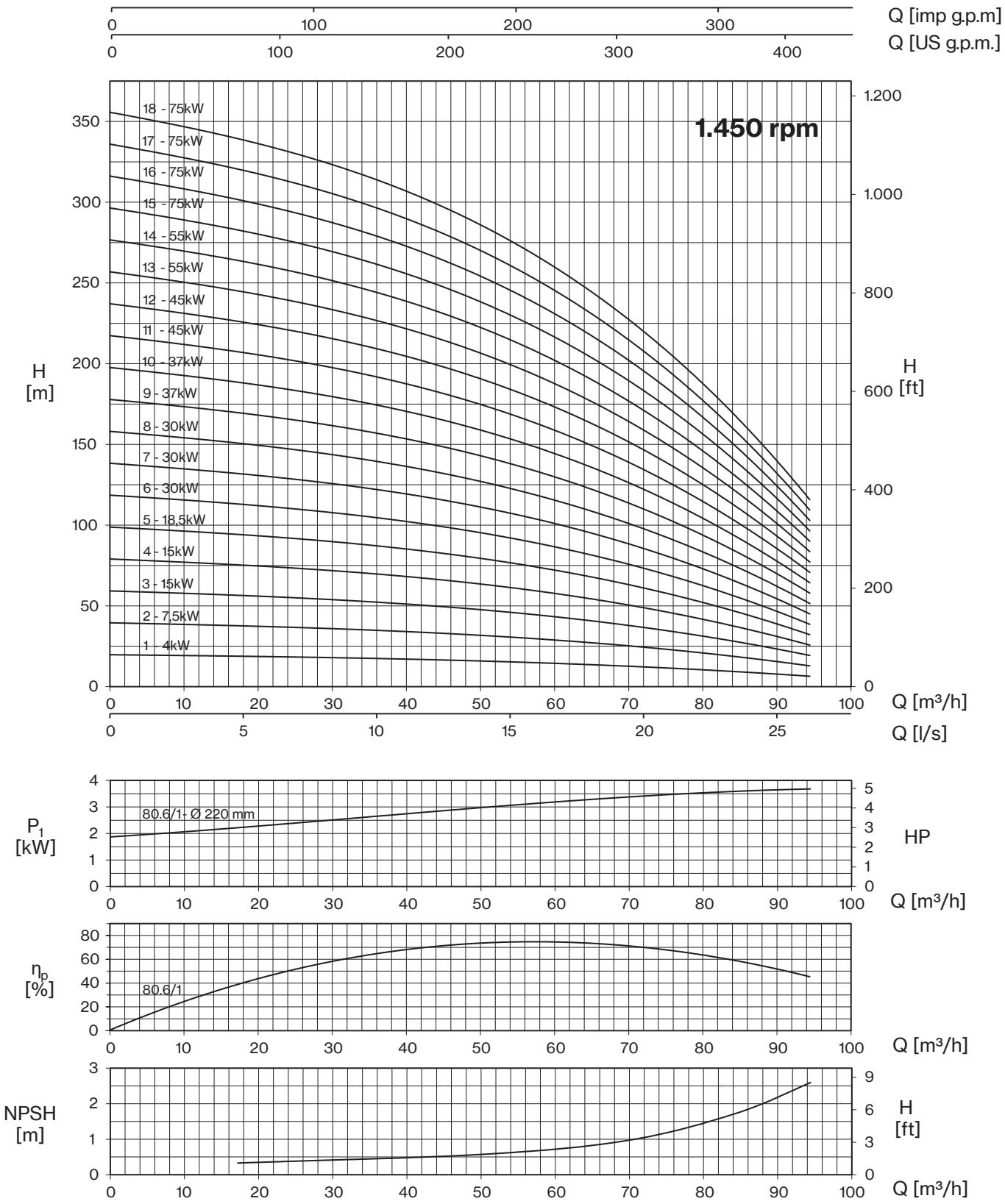
Q [imp g.p.m]
Q [US g.p.m.]
1.450 rpm
18 - 75kW
17 - 75kW
16 - 75kW
15 - 75kW
14 - 55kW
13 - 55kW
12 - 45kW
11 - 45kW
10 - 37kW
9 - 37kW
8 - 30kW
7 - 30kW
6 - 30kW
5 - 18,5kW
4 - 15kW
3 - 15kW
2 - 7,5kW
1 - 4kW
H [m]
H [ft]
Q [m³/h]
Q [l/s]
80.6/1- Ø 220 mm
P1 [kW]
HP
80.6/1
ηp [%]
NPSH [m]

100.2
Performance curves

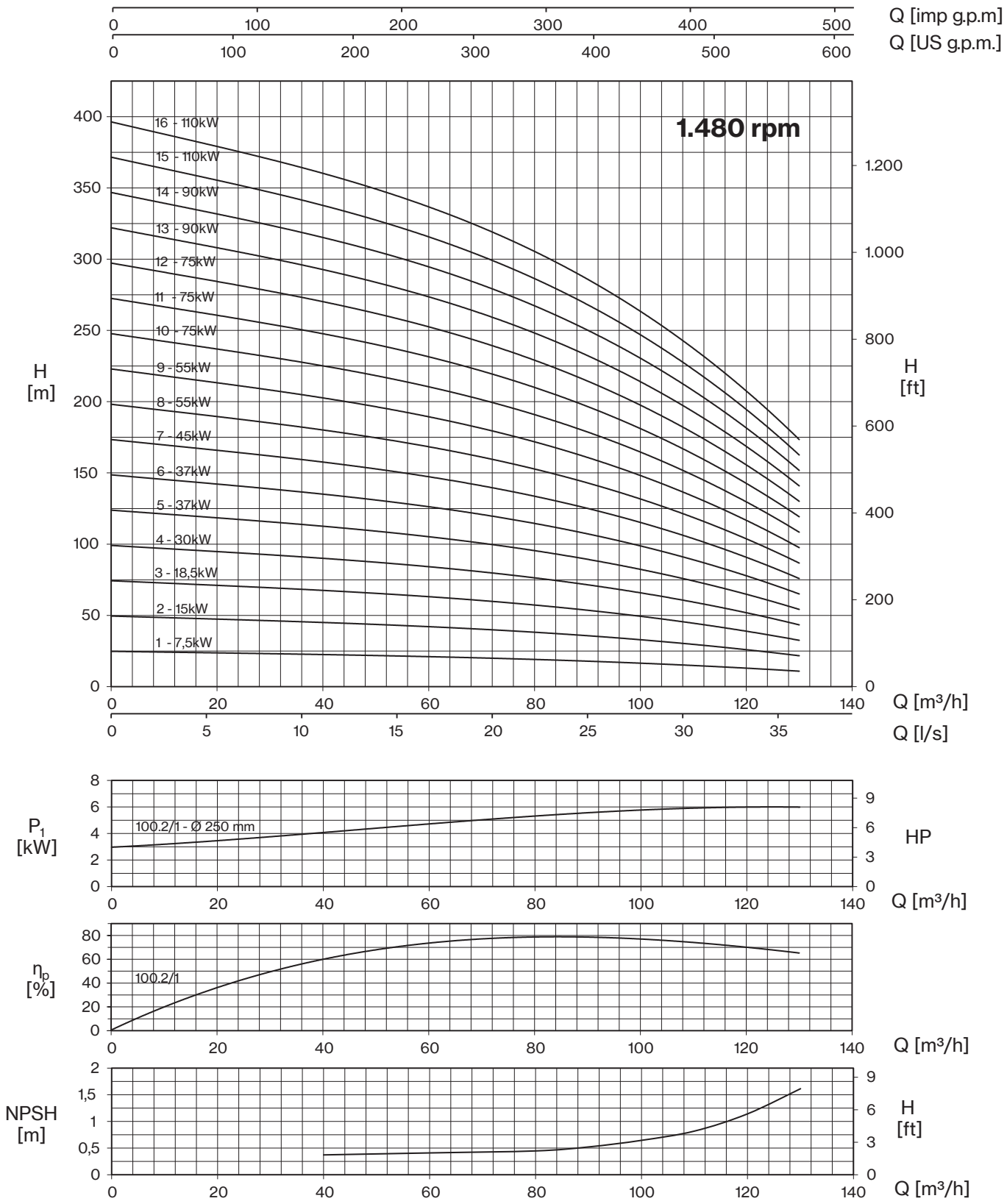

Valid for: p=1 (kg/dm³), viscosity ≤ 20 mm²/sec) - Guarantee values according to ISO 9906, Grade 3B - Head based on SG = 1,000

MARLY

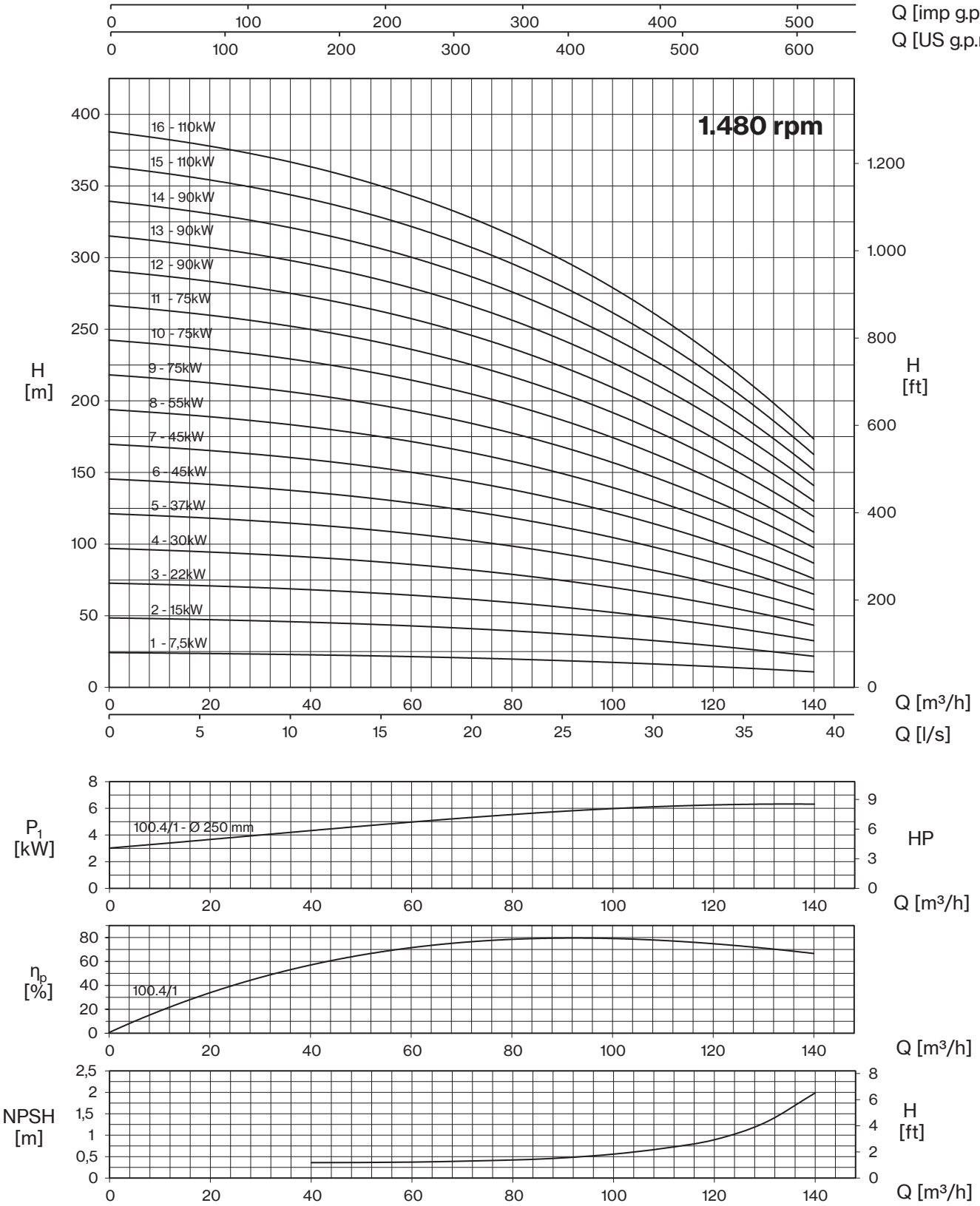
Q [imp g.p.m]
Q [US g.p.m.]
1.480 rpm
16 - 110kW
15 - 110kW
14 - 90kW
13 - 90kW
12 - 90kW
11 - 75kW
10 - 75kW
9 - 75kW
8 - 55kW
7 - 45kW
6 - 45kW
5 - 37kW
4 - 30kW
3 - 22kW
2 - 15kW
1 - 7,5kW
H [m]
H [ft]
Q [m³/h]
Q [l/s]
P1 [kW]
HP
100.4/1 - Ø 250 mm
ηp [%]
100.4/1
NPSH [m]

100.6
Performance curves

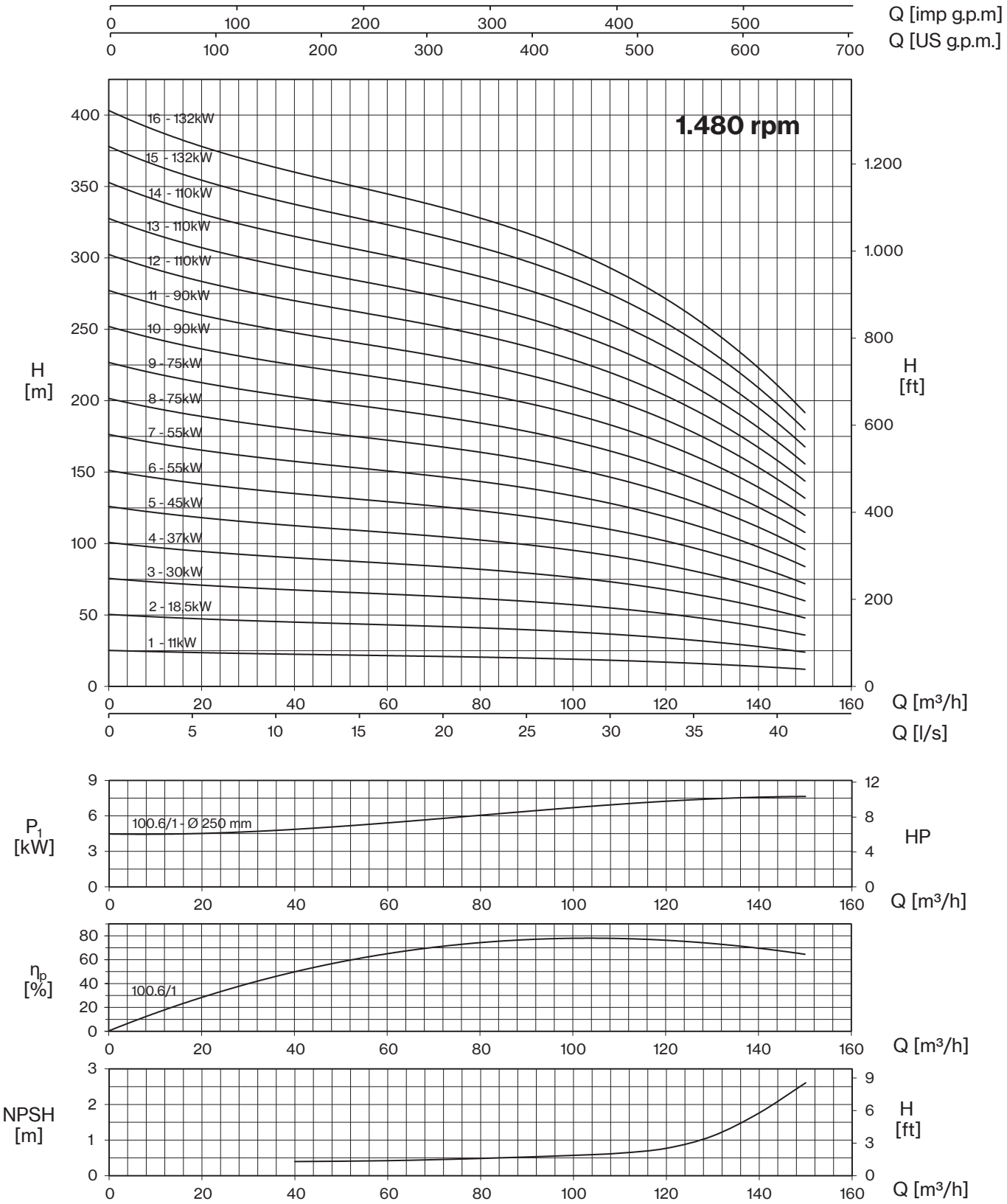

Valid for: p=1 (kg/dm³), viscosity ≤ 20 mm²/sec) - Guarantee values according to ISO 9906, Grade 3B - Head based on SG = 1,000

MARLY

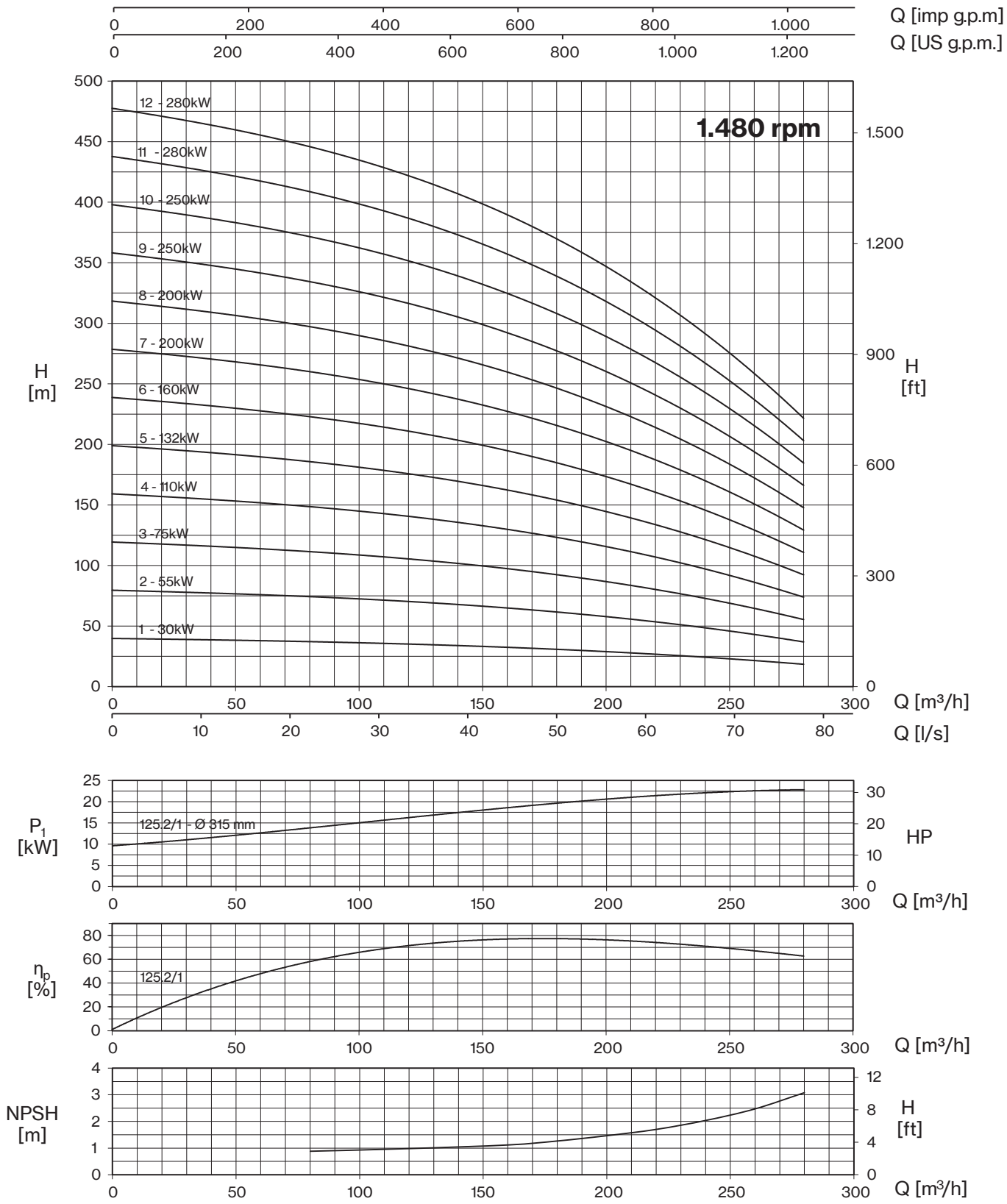
Q [imp g.p.m]
0 200 400 600 800 1.000
Q [US g.p.m.]
0 200 400 600 800 1.000 1.200
1.480 rpm
12 - 280kW
11 - 280kW
10 - 250kW
9 - 250kW
8 - 200kW
7 - 200kW
6 - 160kW
5 - 132kW
4 - 110kW
3 -75kW
2 - 55kW
1 - 30kW
H [m]
0 50 100 150 200 250 300 350 400 450 500
H [ft]
0 300 600 900 1.200 1.500
Q [m³/h]
0 50 100 150 200 250 300
Q [l/s]
0 10 20 30 40 50 60 70 80
P1 [kW]
0 5 10 15 20 25
125.2/1 - Ø 315 mm
HP
0 10 20 30
Q [m³/h]
0 50 100 150 200 250 300
ηp [%]
0 20 40 60 80
125.2/1
Q [m³/h]
0 50 100 150 200 250 300
NPSH [m]
0 1 2 3 4
H [ft]
0 4 8 12
Q [m³/h]
0 50 100 150 200 250 300

125.4
Performance curves

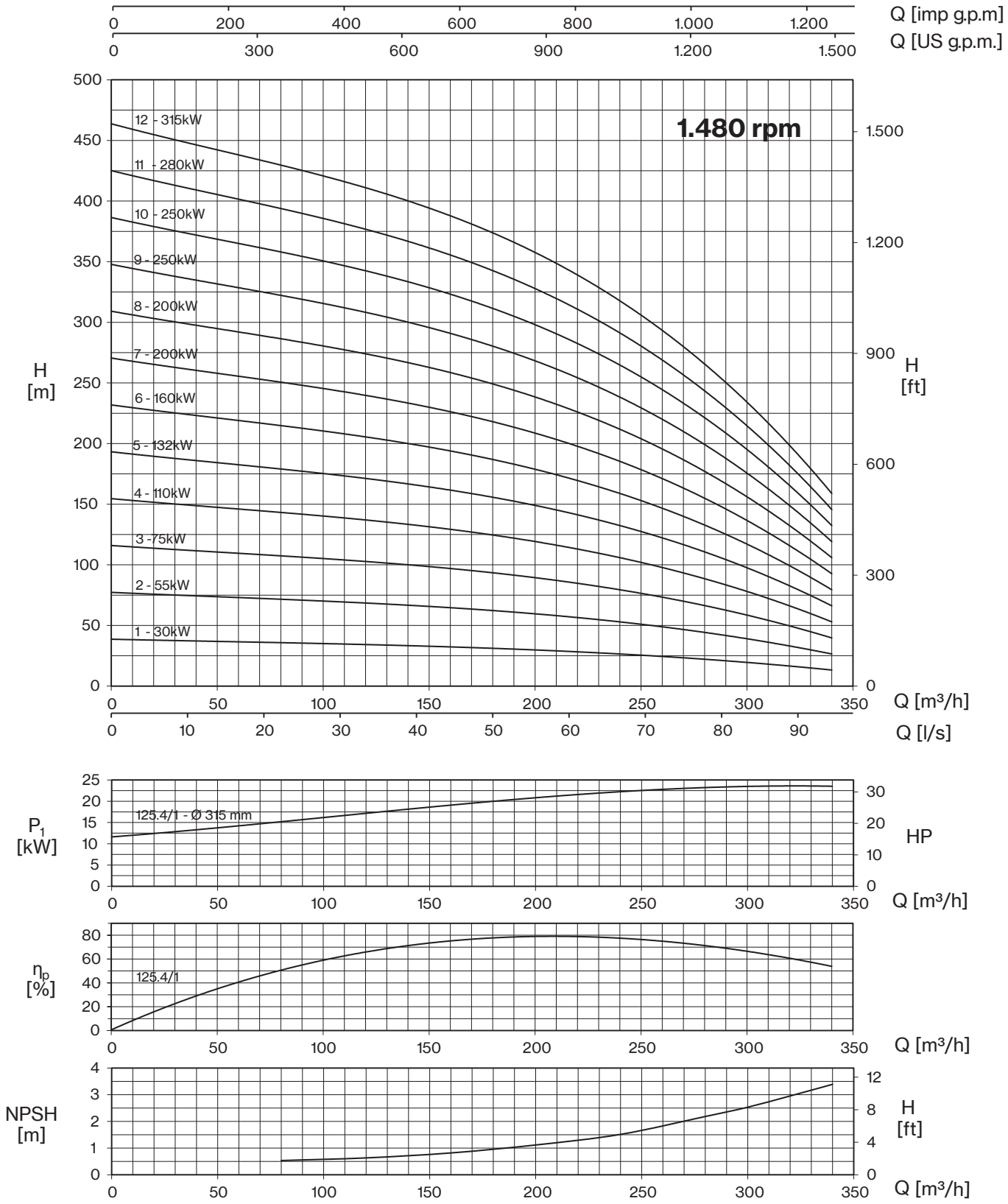

Valid for: p=1 (kg/dm³), viscosity ≤ 20 mm²/sec) - Guarantee values according to ISO 9906, Grade 3B - Head based on SG = 1,000

MARLY

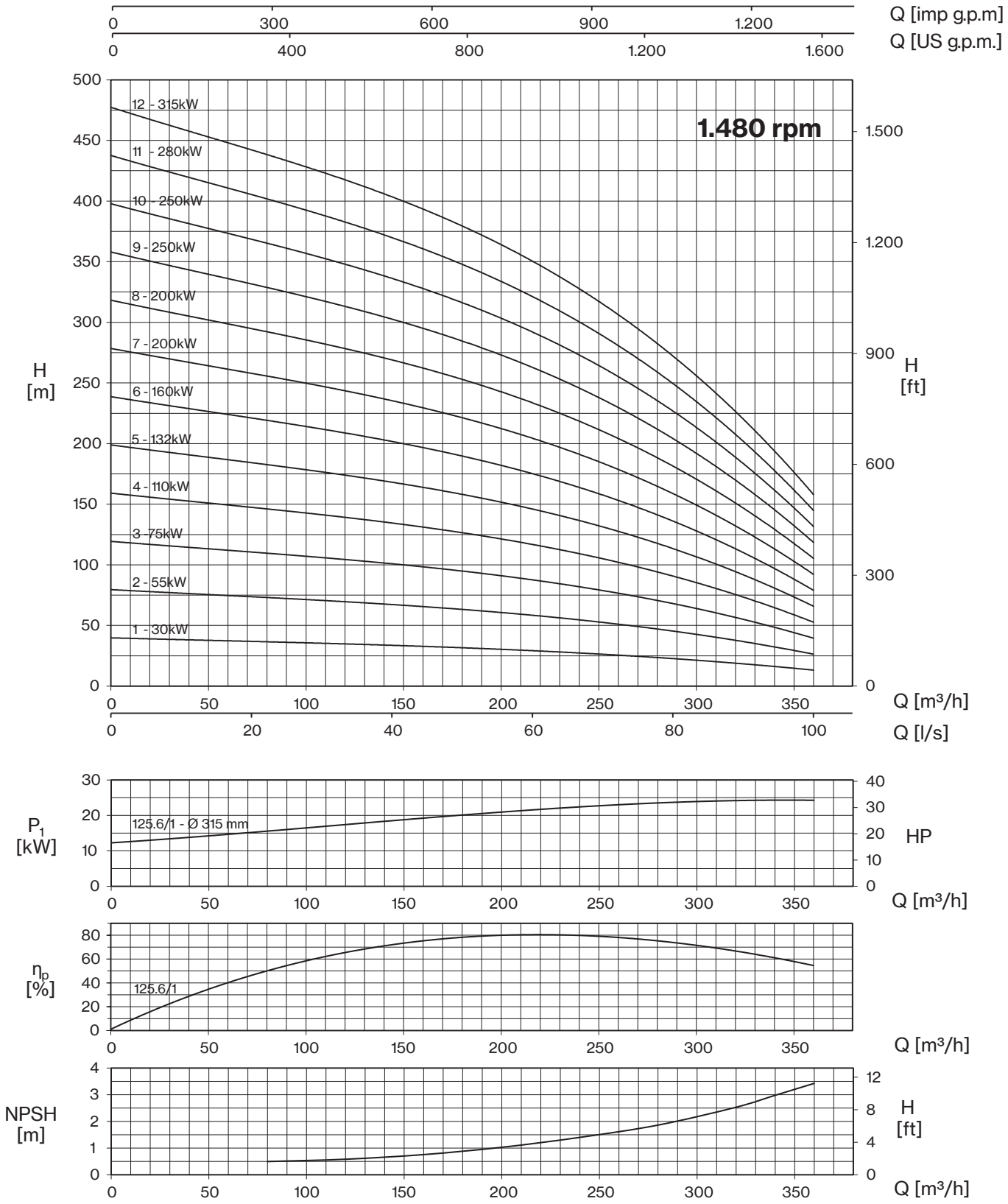
Q [imp g.p.m]
0 300 600 900 1.200
Q [US g.p.m.]
0 400 800 1.200 1.600
1.480 rpm
12 - 315kW
11 - 280kW
10 - 250kW
9 - 250kW
8 - 200kW
7 - 200kW
6 - 160kW
5 - 132kW
4 - 110kW
3 - 75kW
2 - 55kW
1 - 30kW
H [m]
H [ft]
Q [m³/h]
Q [l/s]
125.6/1 - Ø 315 mm
P1 [kW]
HP
ηp [%]
125.6/1
NPSH [m]

150.2
Performance curves

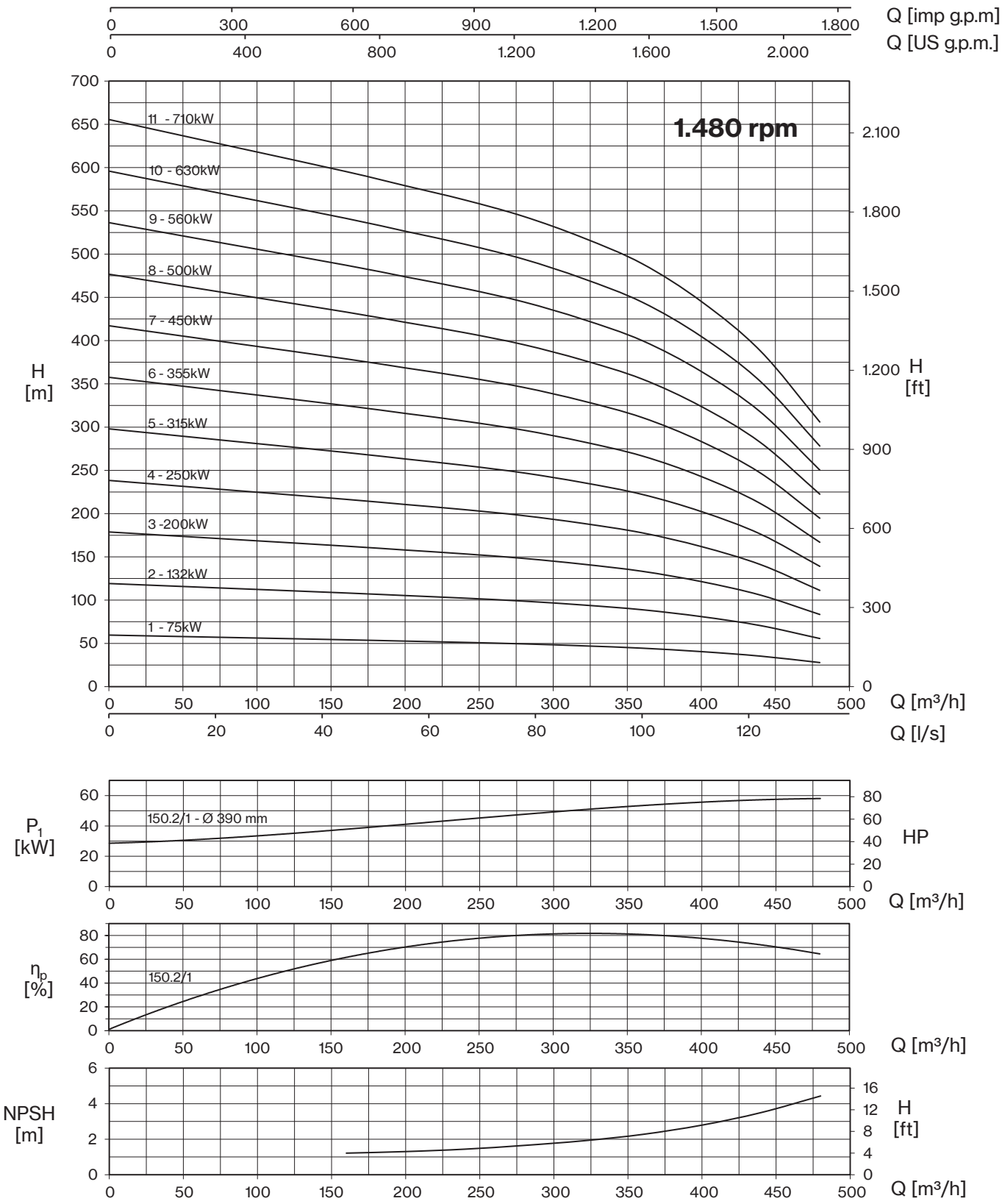

Valid for: p=1 (kg/dm³), viscosity ≤ 20 mm²/sec) - Guarantee values according to ISO 9906, Grade 3B - Head based on SG = 1,000

MARLY

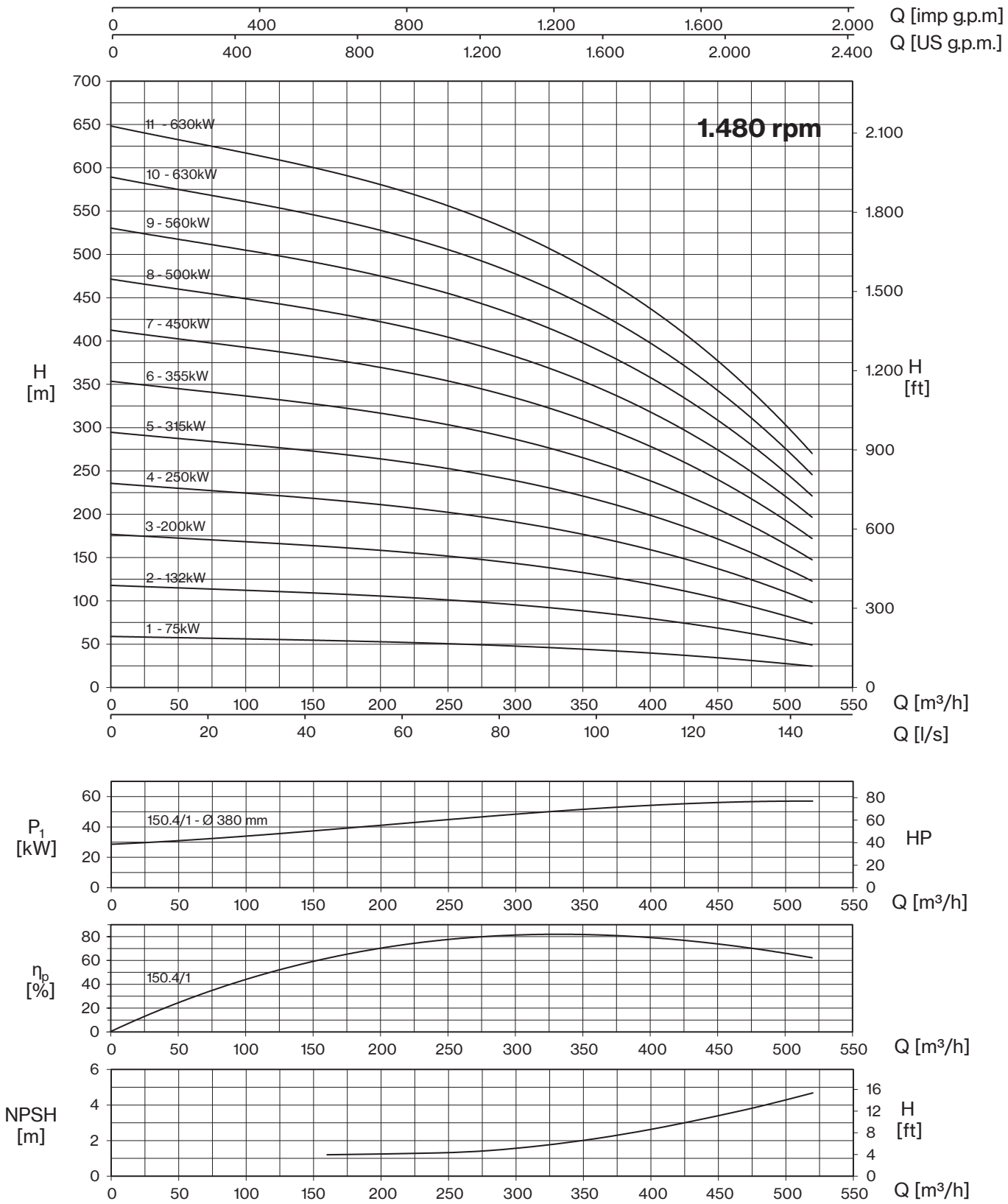
Q [imp g.p.m]
0 400 800 1.200 1.600 2.000
Q [US g.p.m.]
0 400 800 1.200 1.600 2.000 2.400
1.480 rpm
11 - 630kW
10 - 630kW
9 - 560kW
8 - 500kW
7 - 450kW
6 - 355kW
5 - 315kW
4 - 250kW
3 -200kW
2 - 132kW
1 - 75kW
H [m]
H [ft]
Q [m³/h]
Q [l/s]
P1 [kW]
HP
150.4/1 - Ø 380 mm
ηp [%]
150.4/1
NPSH [m]

150.6
Performance curves

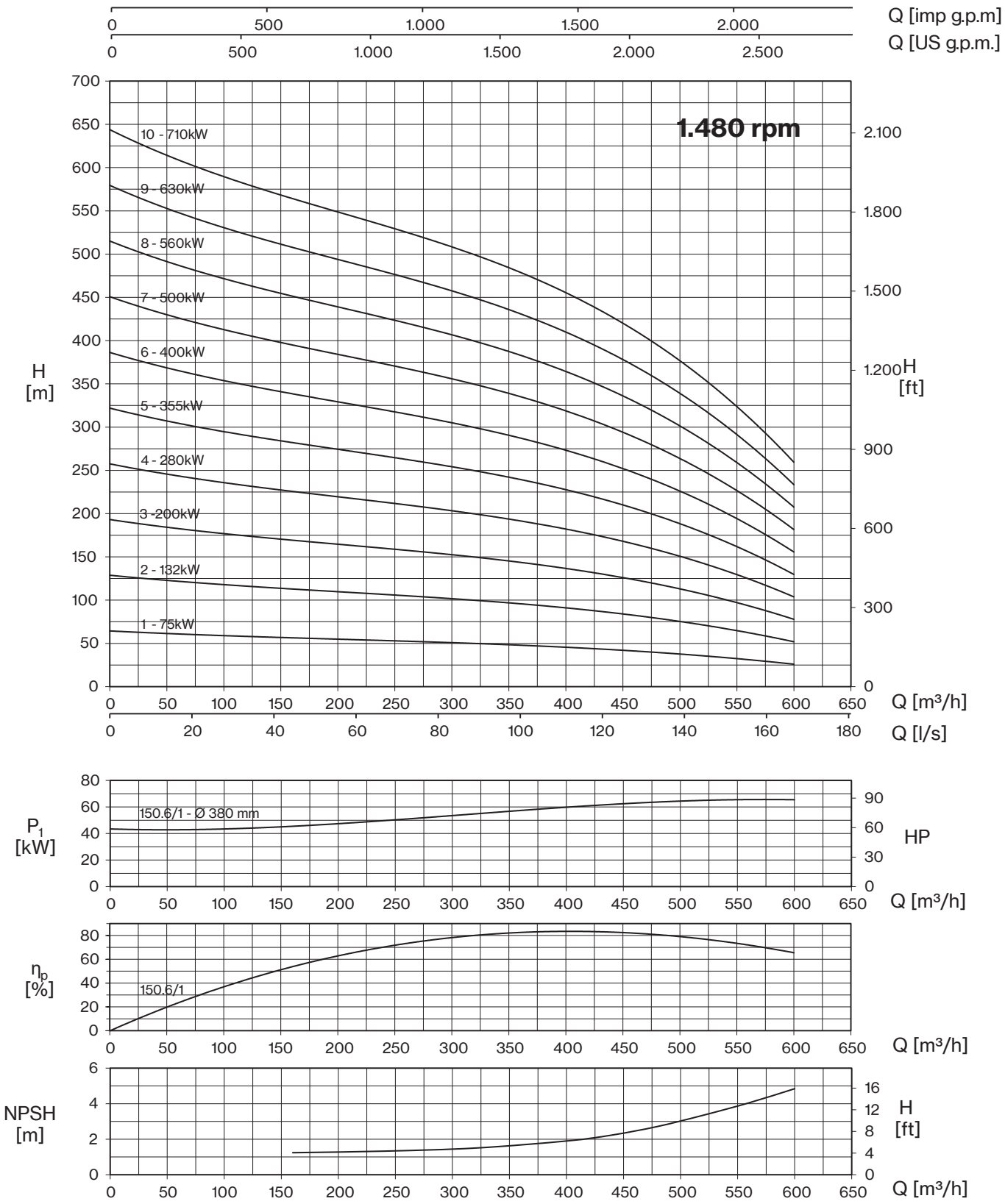

Valid for: p=1 (kg/dm³), viscosity ≤ 20 mm²/sec) - Guarantee values according to ISO 9906, Grade 3B - Head based on SG = 1,000

MARLY

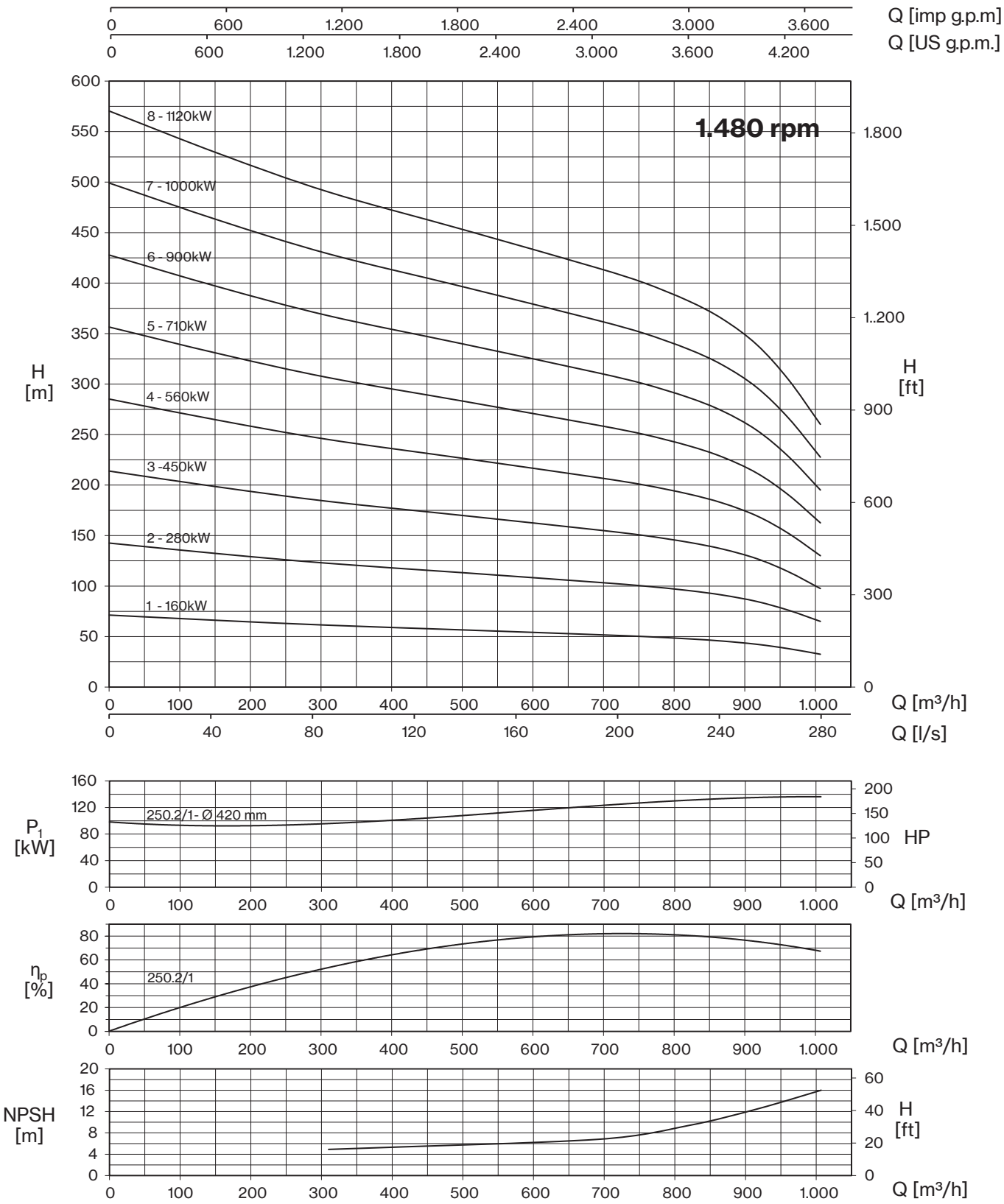
Q [imp g.p.m]
0 600 1.200 1.800 2.400 3.000 3.600
Q [US g.p.m.]
0 600 1.200 1.800 2.400 3.000 3.600 4.200
1.480 rpm
8 - 1120kW
7 - 1000kW
6 - 900kW
5 - 710kW
4 - 560kW
3 -450kW
2 - 280kW
1 - 160kW
H [m]
H [ft]
Q [m³/h]
Q [l/s]
P1 [kW]
HP
250.2/1- Ø 420 mm
ηp [%]
250.2/1
NPSH [m]

250.4
Performance curves

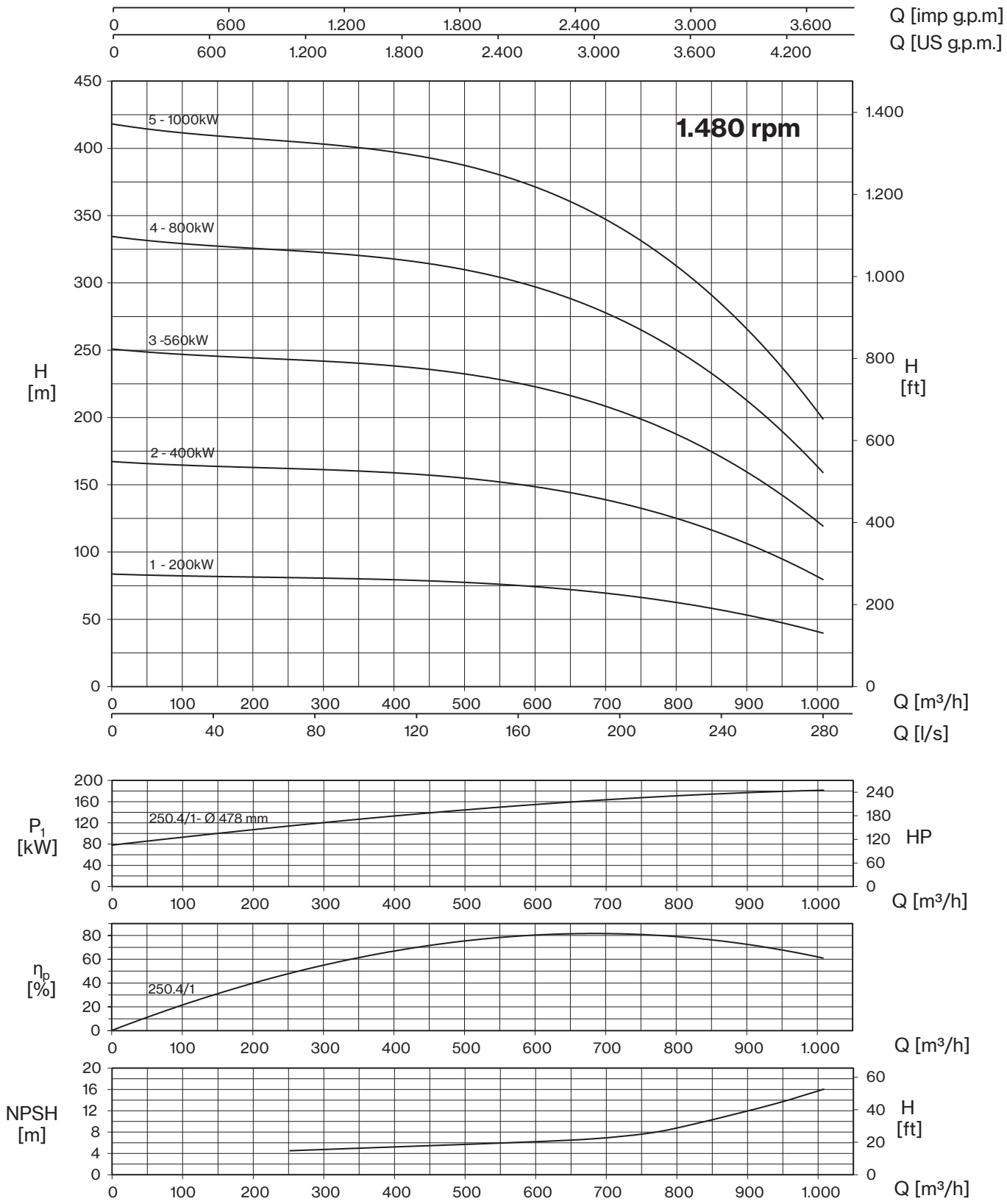

Valid for: p=1 (kg/dm³), viscosity ≤ 20 mm²/sec) - Guarantee values according to ISO 9906, Grade 3B - Head based on SG = 1,000

MARLY

2 POLES

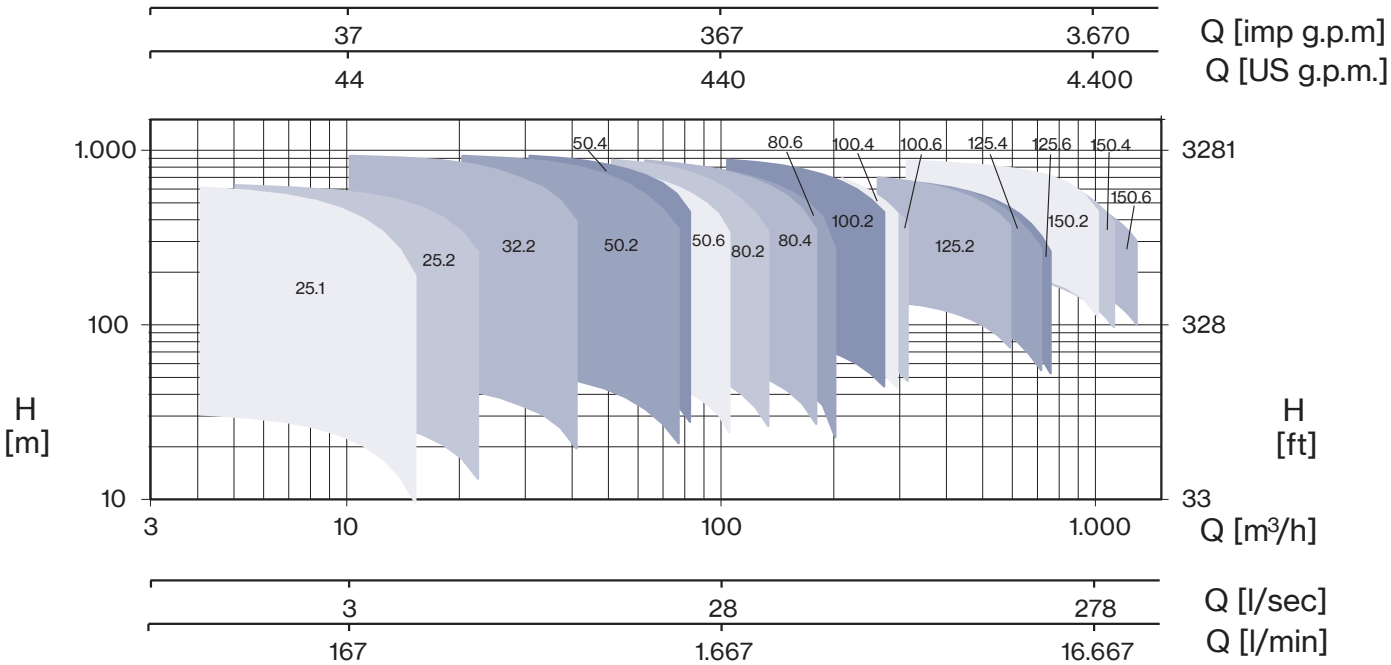
37
367
3.670
Q [imp g.p.m]
44
440
4.400
Q [US g.p.m.]
1.000
100
10
H
[m]
3281
328
33
H
[ft]
25.1
25.2
32.2
50.2
50.4
50.6
80.2
80.4
80.6
100.2
100.4
100.6
125.2
125.4
125.6
150.2
150.4
150.6
3
10
100
1.000
Q [m³/h]
3
28
278
Q [l/sec]
167
1.667
16.667
Q [l/min]

25.1 INOX

Performance curves

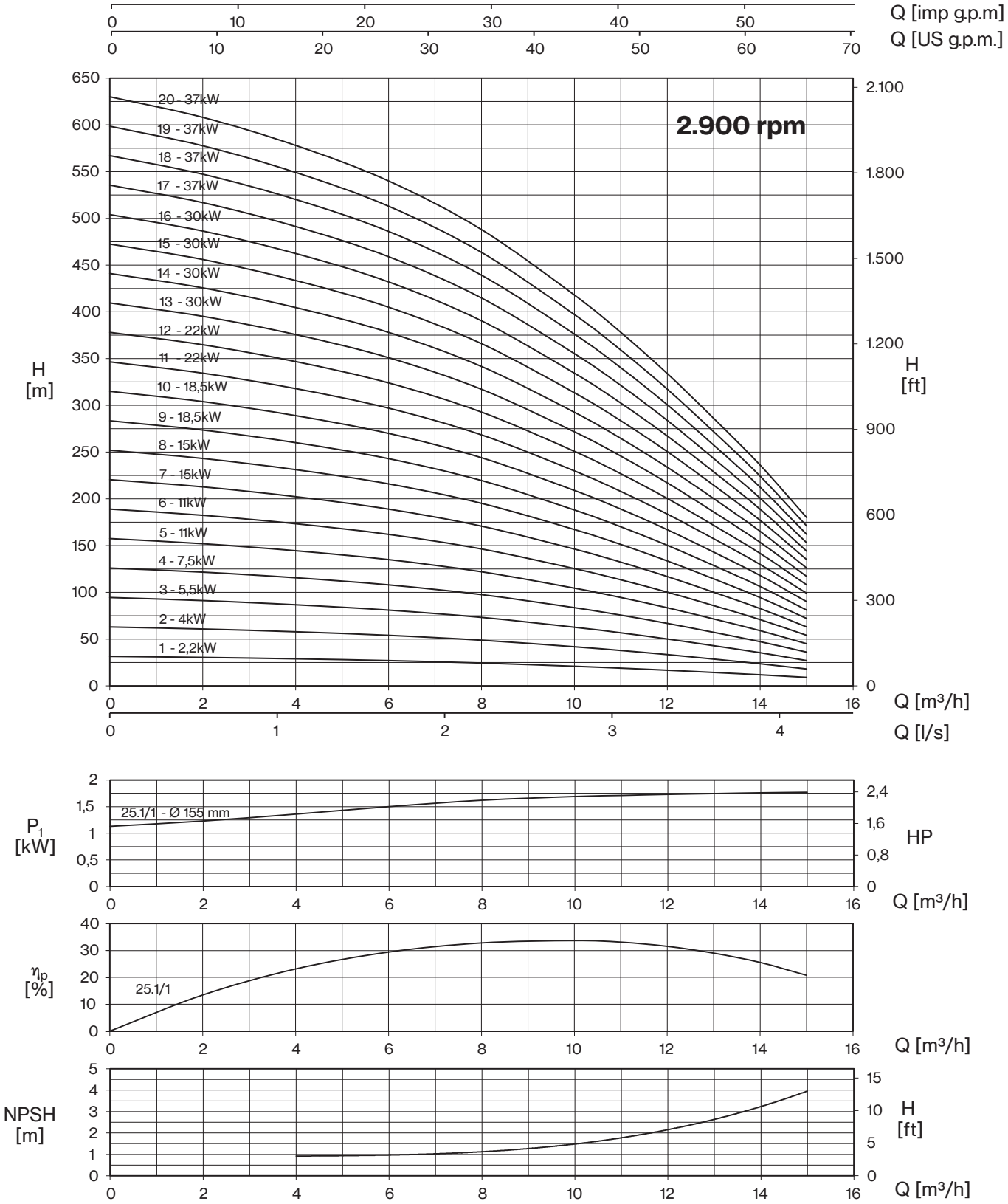

Valid for: p=1 (kg/dm³), viscosity ≤ 20 mm²/sec) - Guarantee values according to ISO 9906, Grade 3B - Head based on SG = 1,000

MARLY

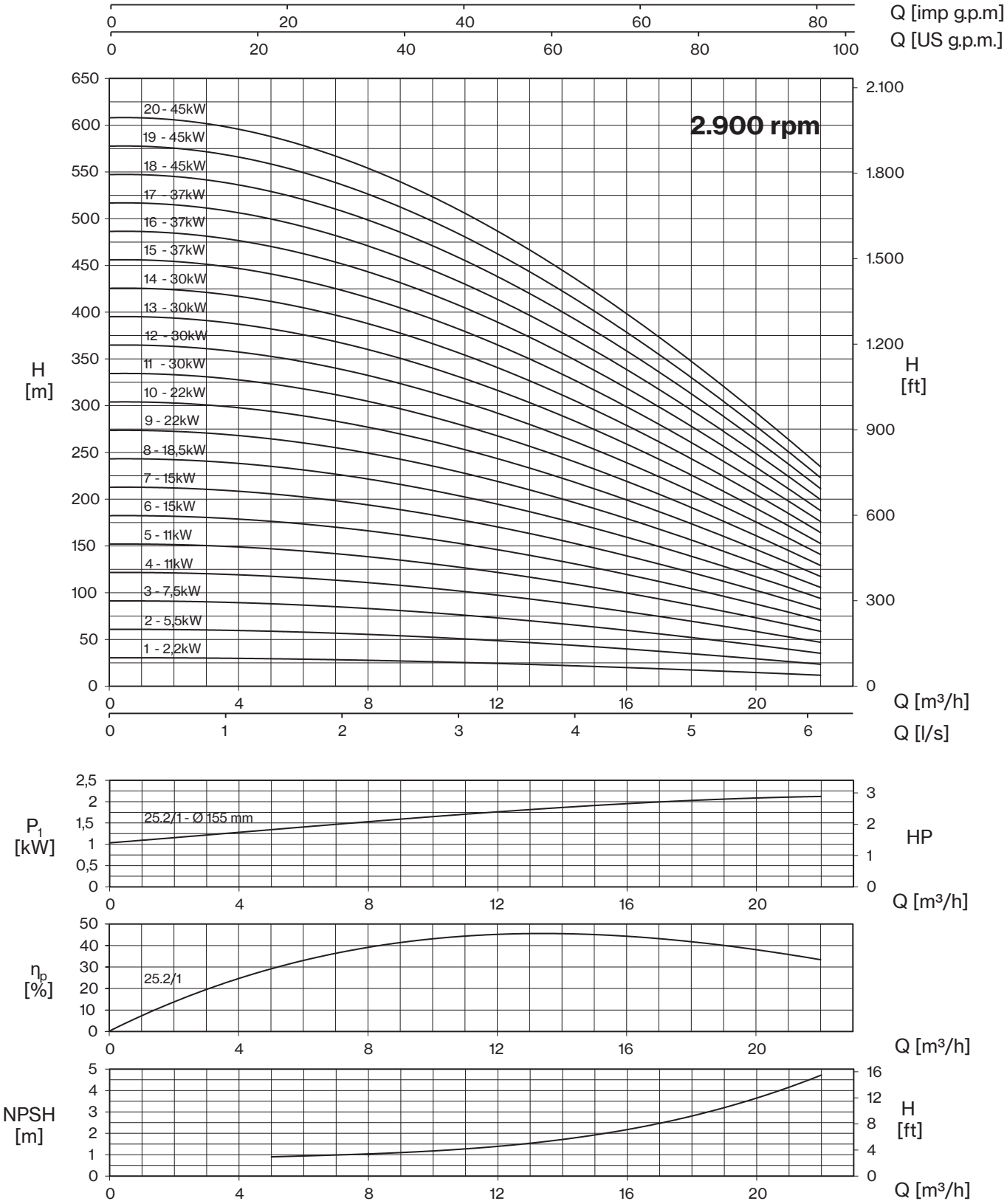
Q [imp g.p.m]
Q [US g.p.m.]
H [m]
H [ft]
2.900 rpm
20 - 45kW
19 - 45kW
18 - 45kW
17 - 37kW
16 - 37kW
15 - 37kW
14 - 30kW
13 - 30kW
12 - 30kW
11 - 30kW
10 - 22kW
9 - 22kW
8 - 18,5kW
7 - 15kW
6 - 15kW
5 - 11kW
4 - 11kW
3 - 7,5kW
2 - 5,5kW
1 - 2,2kW
Q [m³/h]
Q [l/s]
P1 [kW]
HP
25.2/1 - Ø 155 mm
ηp [%]
25.2/1
NPSH [m]

25.2 INOX

Performance curves

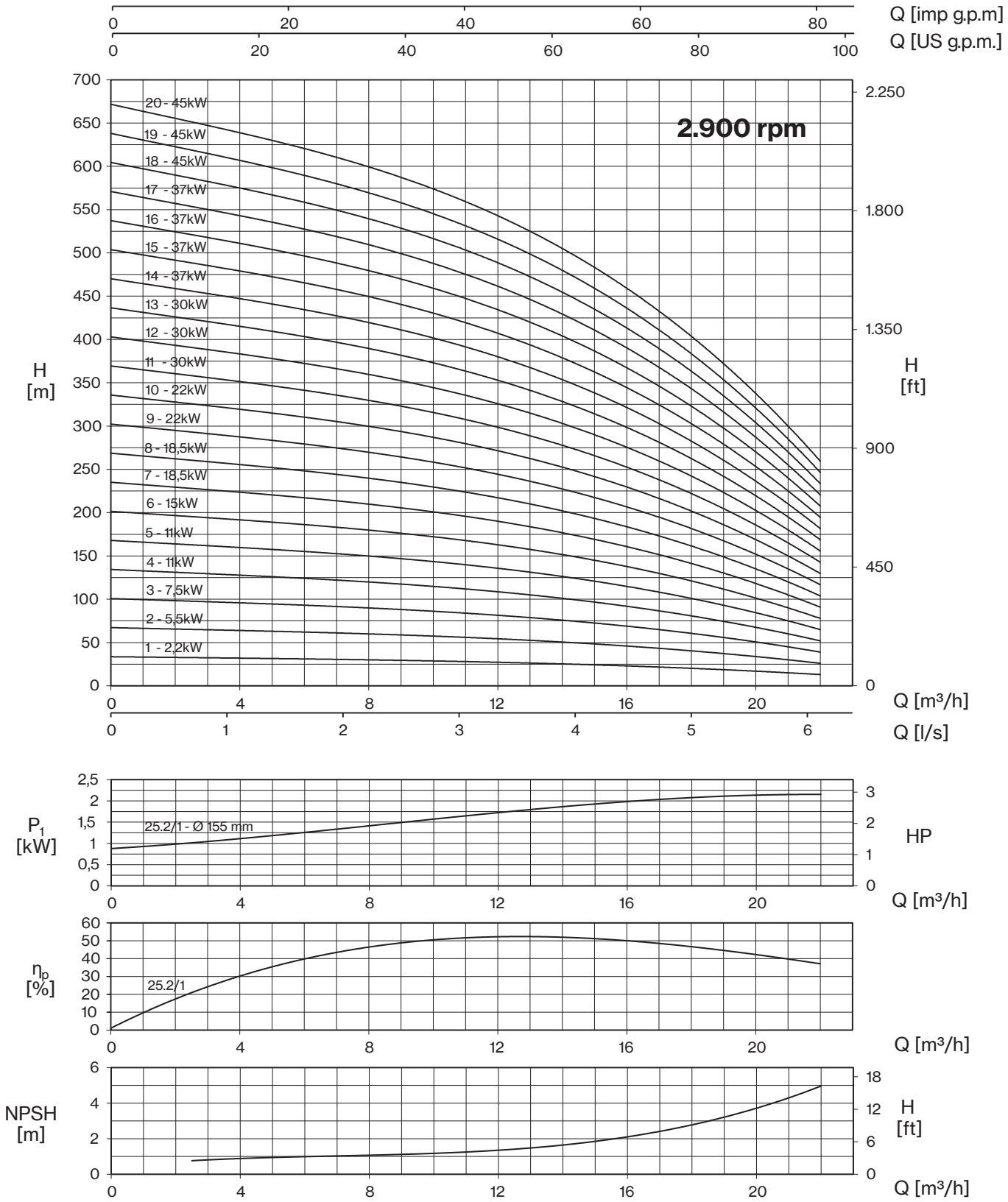

Valid for: p=1 (kg/dm³), viscosity ≤ 20 mm²/sec) - Guarantee values according to ISO 9906, Grade 3B - Head based on SG = 1,000

MARLY

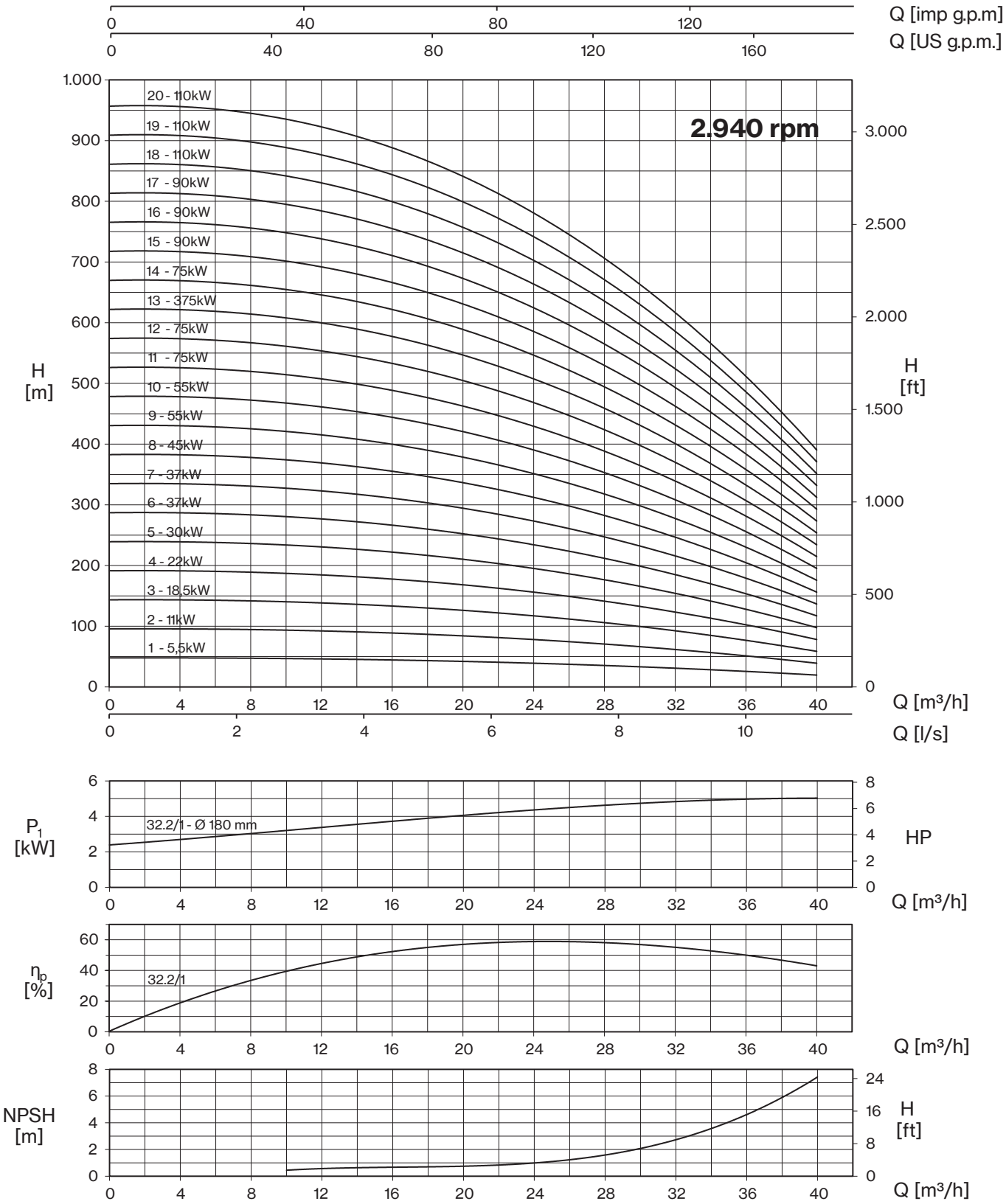
Q [imp g.p.m]
Q [US g.p.m.]
2.940 rpm
20 - 110kW
19 - 110kW
18 - 110kW
17 - 90kW
16 - 90kW
15 - 90kW
14 - 75kW
13 - 375kW
12 - 75kW
11 - 75kW
10 - 55kW
9 - 55kW
8 - 45kW
7 - 37kW
6 - 37kW
5 - 30kW
4 - 22kW
3 - 18,5kW
2 - 11kW
1 - 5,5kW
H [m]
H [ft]
Q [m³/h]
Q [l/s]
P1 [kW]
HP
32.2/1 - Ø 180 mm
ηp [%]
32.2/1
NPSH [m]

32.2 INOX

Performance curves

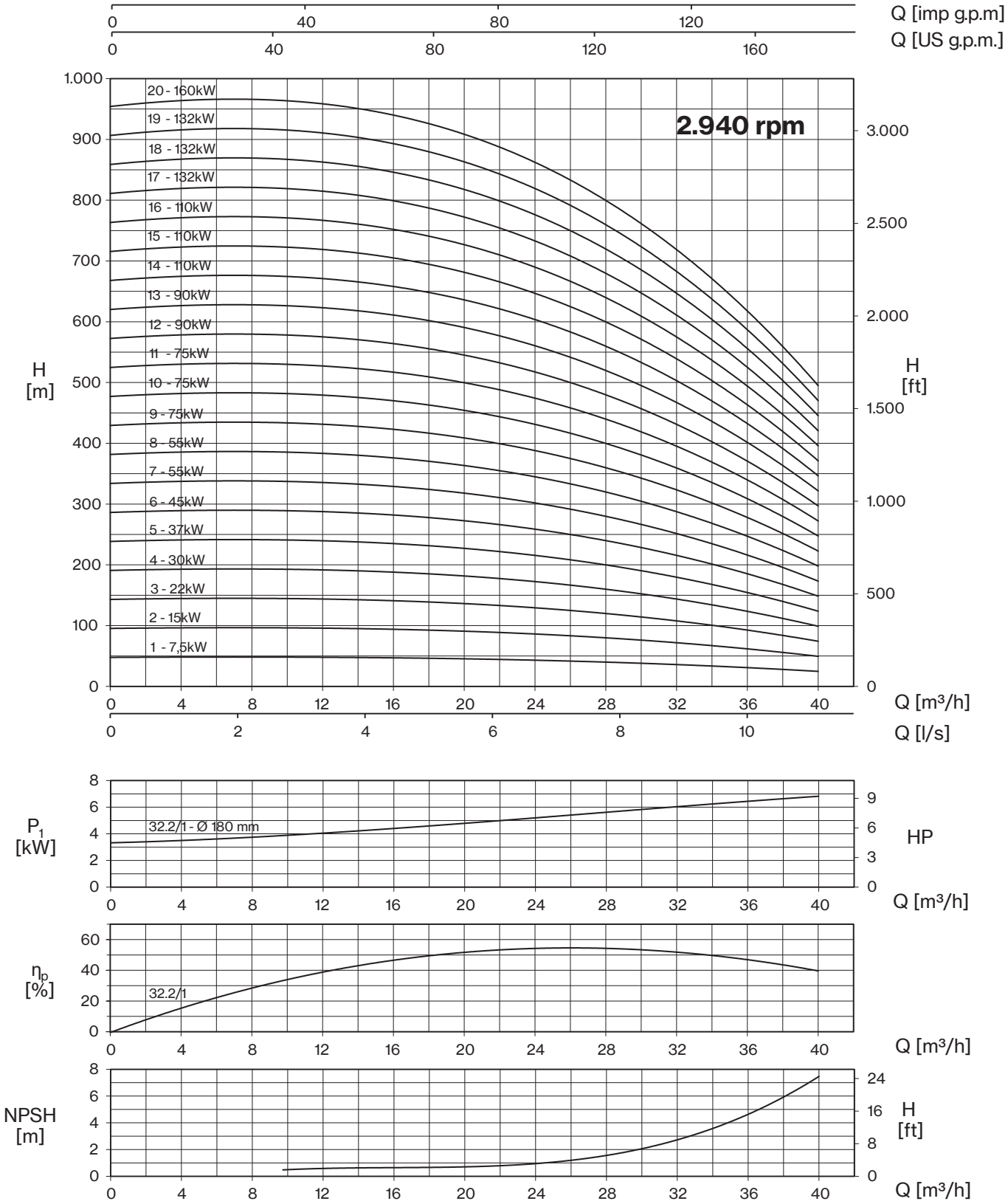

Valid for: p=1 (kg/dm³), viscosity ≤ 20 mm²/sec) - Guarantee values according to ISO 9906, Grade 3B - Head based on SG = 1,000

MARLY

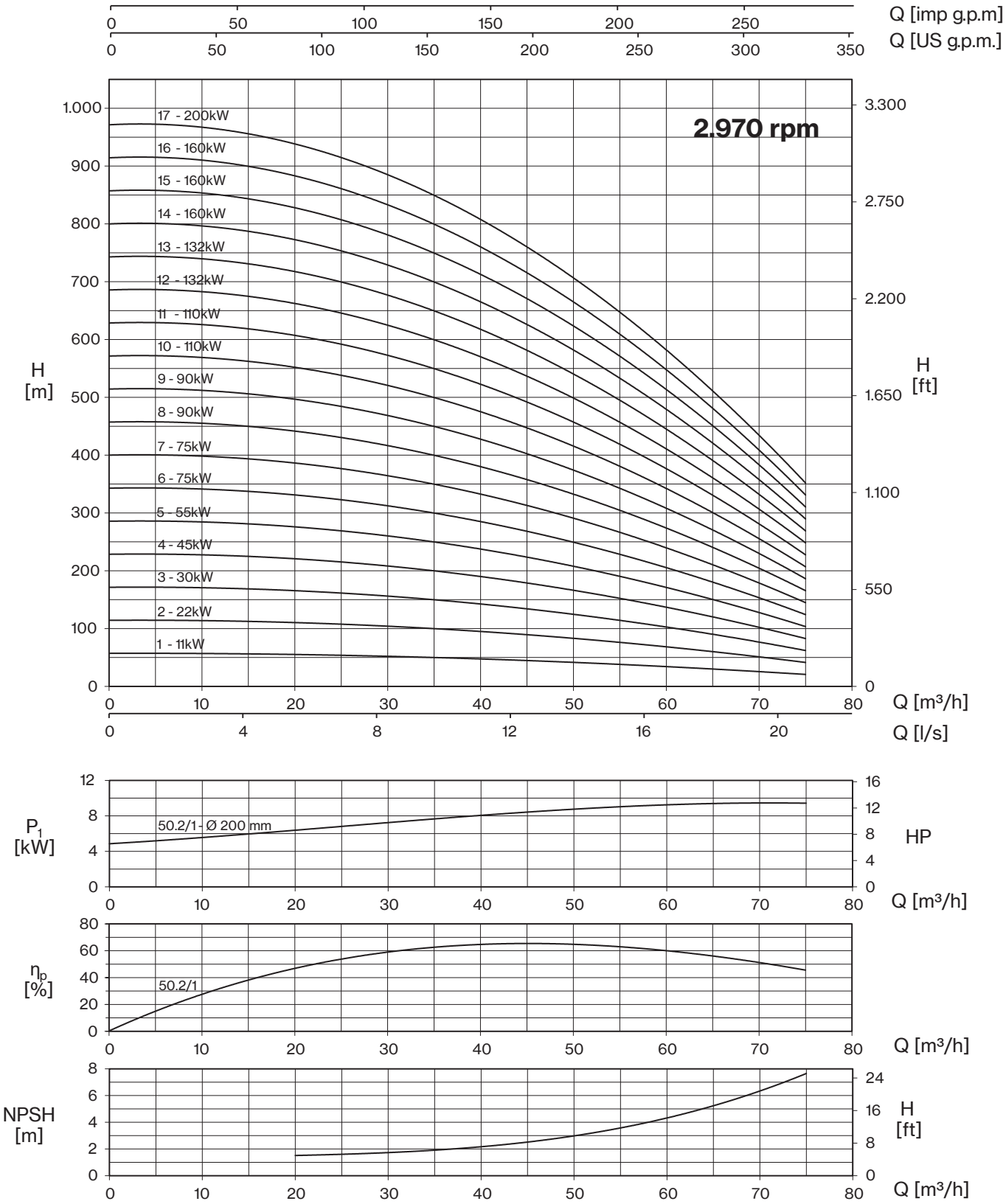
Q [imp g.p.m]
Q [US g.p.m.]
2.970 rpm
17 - 200kW
16 - 160kW
15 - 160kW
14 - 160kW
13 - 132kW
12 - 132kW
11 - 110kW
10 - 110kW
9 - 90kW
8 - 90kW
7 - 75kW
6 - 75kW
5 - 55kW
4 - 45kW
3 - 30kW
2 - 22kW
1 - 11kW
H [m]
H [ft]
Q [m³/h]
Q [l/s]
50.2/1 - Ø 200 mm
P1 [kW]
HP
50.2/1
ηp [%]
NPSH [m]

50.4
Performance curves

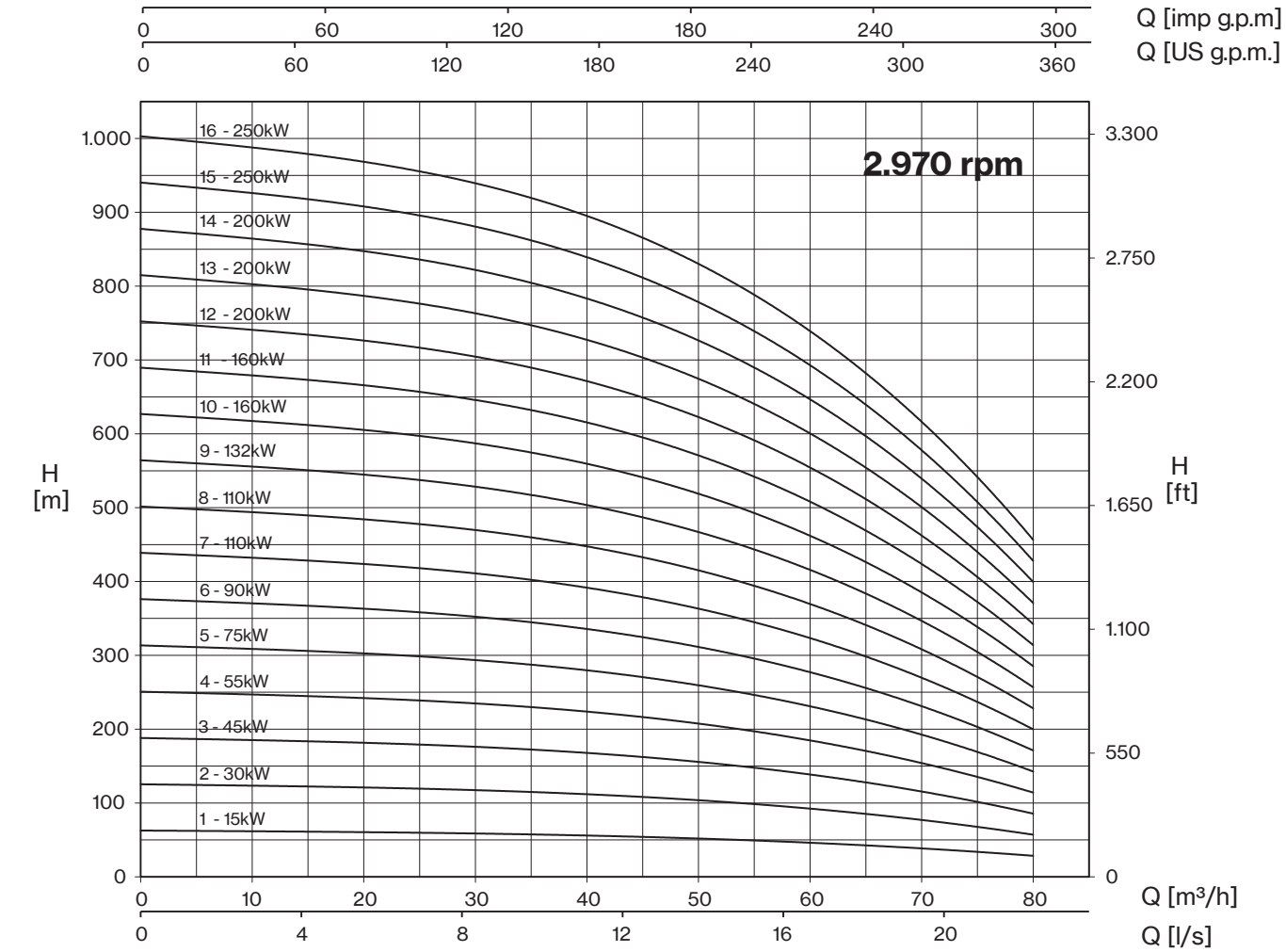

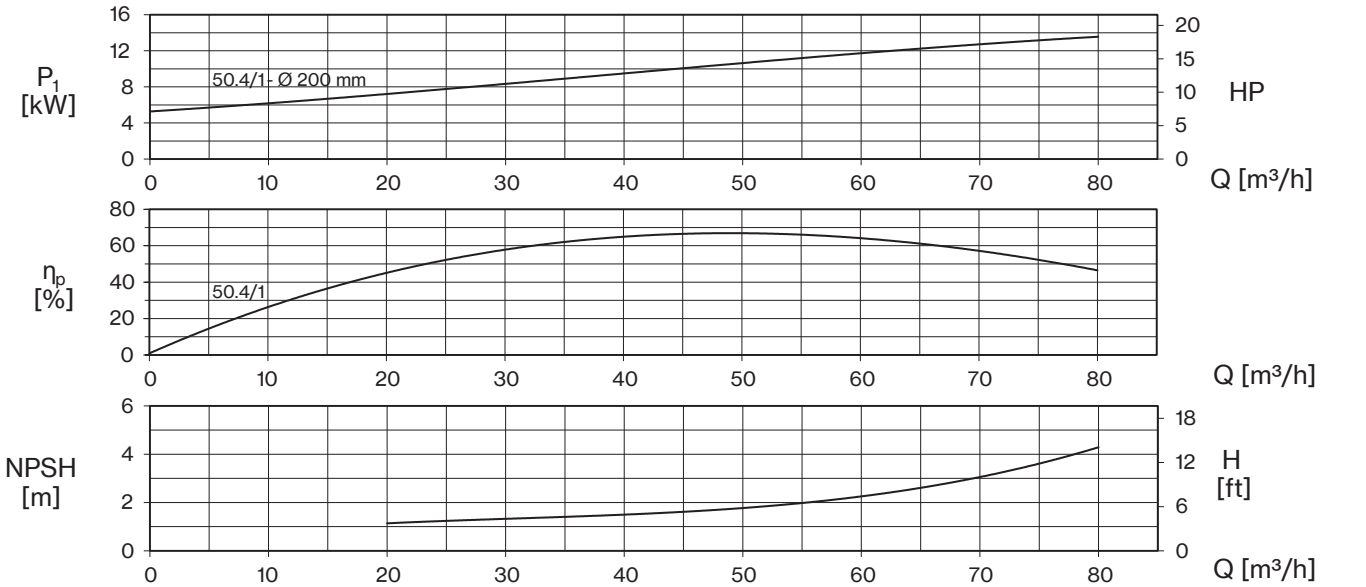

Valid for: p=1 (kg/dm³), viscosity ≤ 20 mm²/sec) - Guarantee values according to ISO 9906, Grade 3B - Head based on SG = 1,000

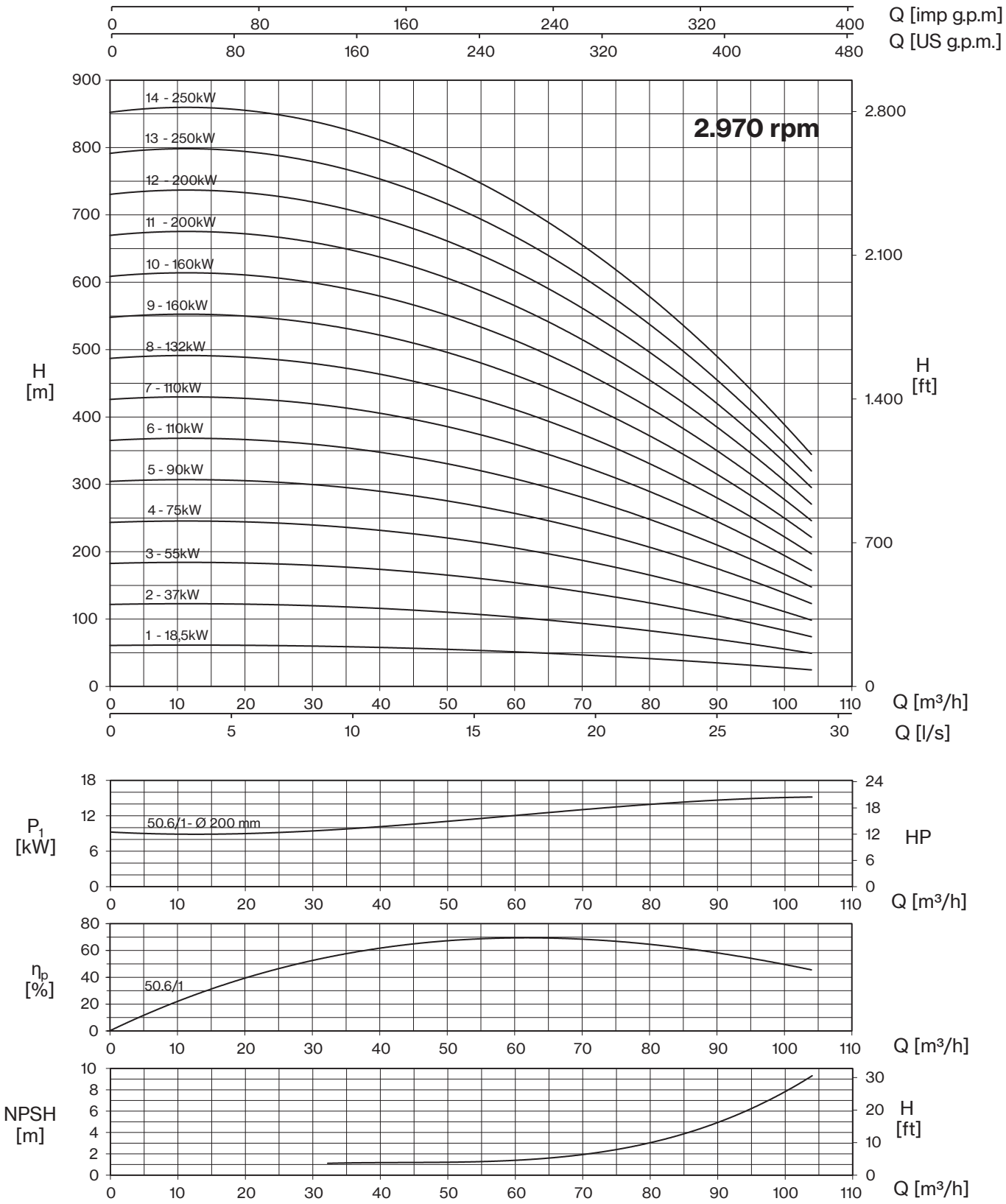
Q [imp g.p.m]
0 80 160 240 320 400
Q [US g.p.m.]
0 80 160 240 320 400 480
2.970 rpm
14 - 250kW
13 - 250kW
12 - 200kW
11 - 200kW
10 - 160kW
9 - 160kW
8 - 132kW
7 - 110kW
6 - 110kW
5 - 90kW
4 - 75kW
3 - 55kW
2 - 37kW
1 - 18,5kW
H [m]
0 100 200 300 400 500 600 700 800 900
H [ft]
0 700 1.400 2.100 2.800
Q [m³/h]
0 10 20 30 40 50 60 70 80 90 100 110
Q [l/s]
0 5 10 15 20 25 30
P1 [kW]
0 6 12 18
50.6/1- Ø 200 mm
HP
0 6 12 18 24
Q [m³/h]
0 10 20 30 40 50 60 70 80 90 100 110
ηp [%]
0 20 40 60 80
50.6/1
Q [m³/h]
0 10 20 30 40 50 60 70 80 90 100 110
NPSH [m]
0 2 4 6 8 10
H [ft]
0 10 20 30
Q [m³/h]
0 10 20 30 40 50 60 70 80 90 100 110

80.2
Performance curves

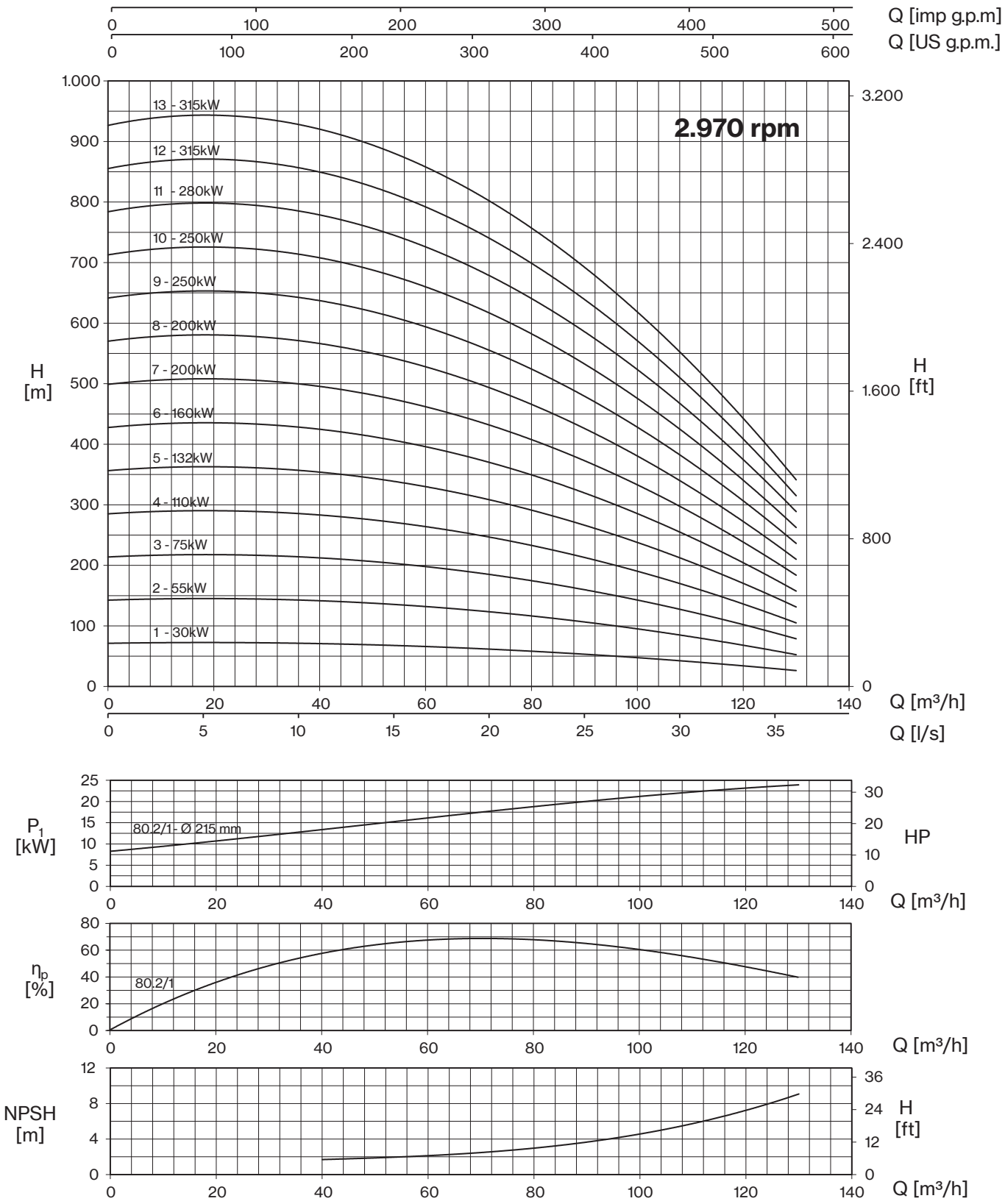

Valid for: p=1 (kg/dm³), viscosity ≤ 20 mm²/sec) - Guarantee values according to ISO 9906, Grade 3B - Head based on SG = 1,000

MARLY

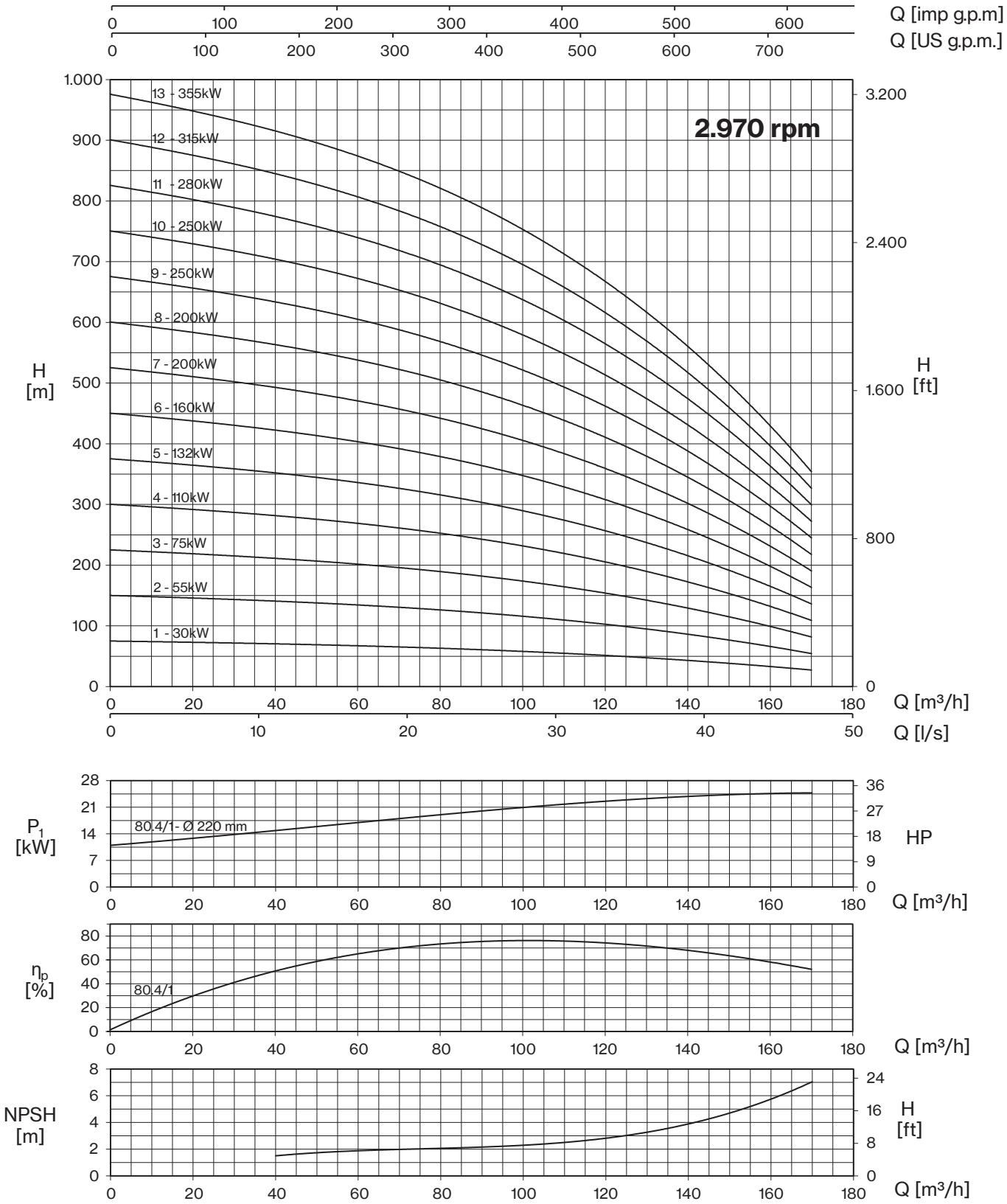
Q [imp g.p.m]
0 100 200 300 400 500 600
Q [US g.p.m.]
0 100 200 300 400 500 600 700
2.970 rpm
13 - 355kW
12 - 315kW
11 - 280kW
10 - 250kW
9 - 250kW
8 - 200kW
7 - 200kW
6 - 160kW
5 - 132kW
4 - 110kW
3 - 75kW
2 - 55kW
1 - 30kW
H [m]
1.000 900 800 700 600 500 400 300 200 100 0
H [ft]
3.200 2.400 1.600 800 0
0 20 40 60 80 100 120 140 160 180
Q [m³/h]
0 10 20 30 40 50
Q [l/s]
P1 [kW]
28 21 14 7 0
80.4/1- Ø 220 mm
HP
36 27 18 9 0
Q [m³/h]
ηp [%]
80 60 40 20 0
80.4/1
Q [m³/h]
NPSH [m]
8 6 4 2 0
H [ft]
24 16 8 0
Q [m³/h]

80.6
Performance curves

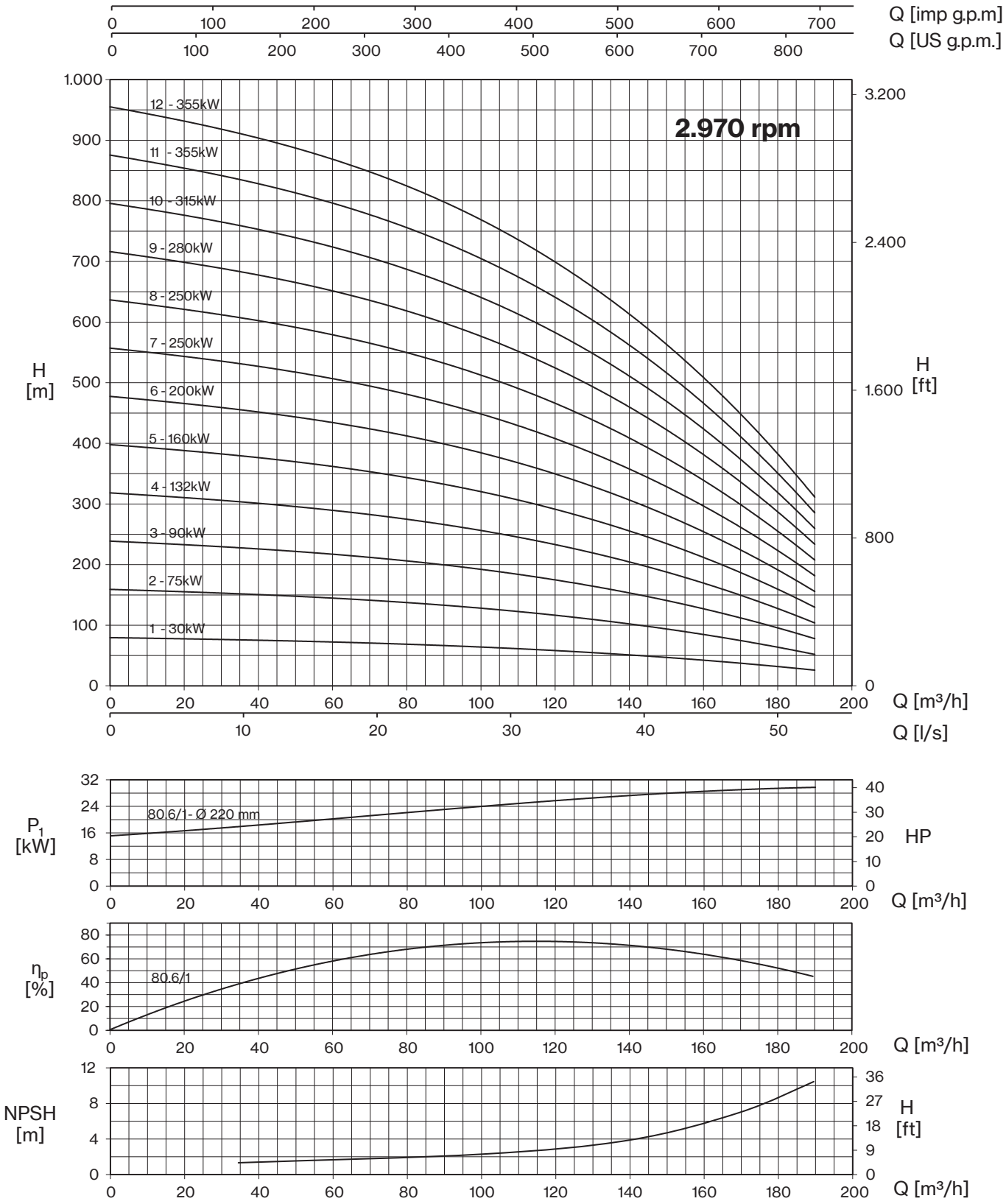

Valid for: p=1 (kg/dm³), viscosity ≤ 20 mm²/sec) - Guarantee values according to ISO 9906, Grade 3B - Head based on SG = 1,000

MARLY

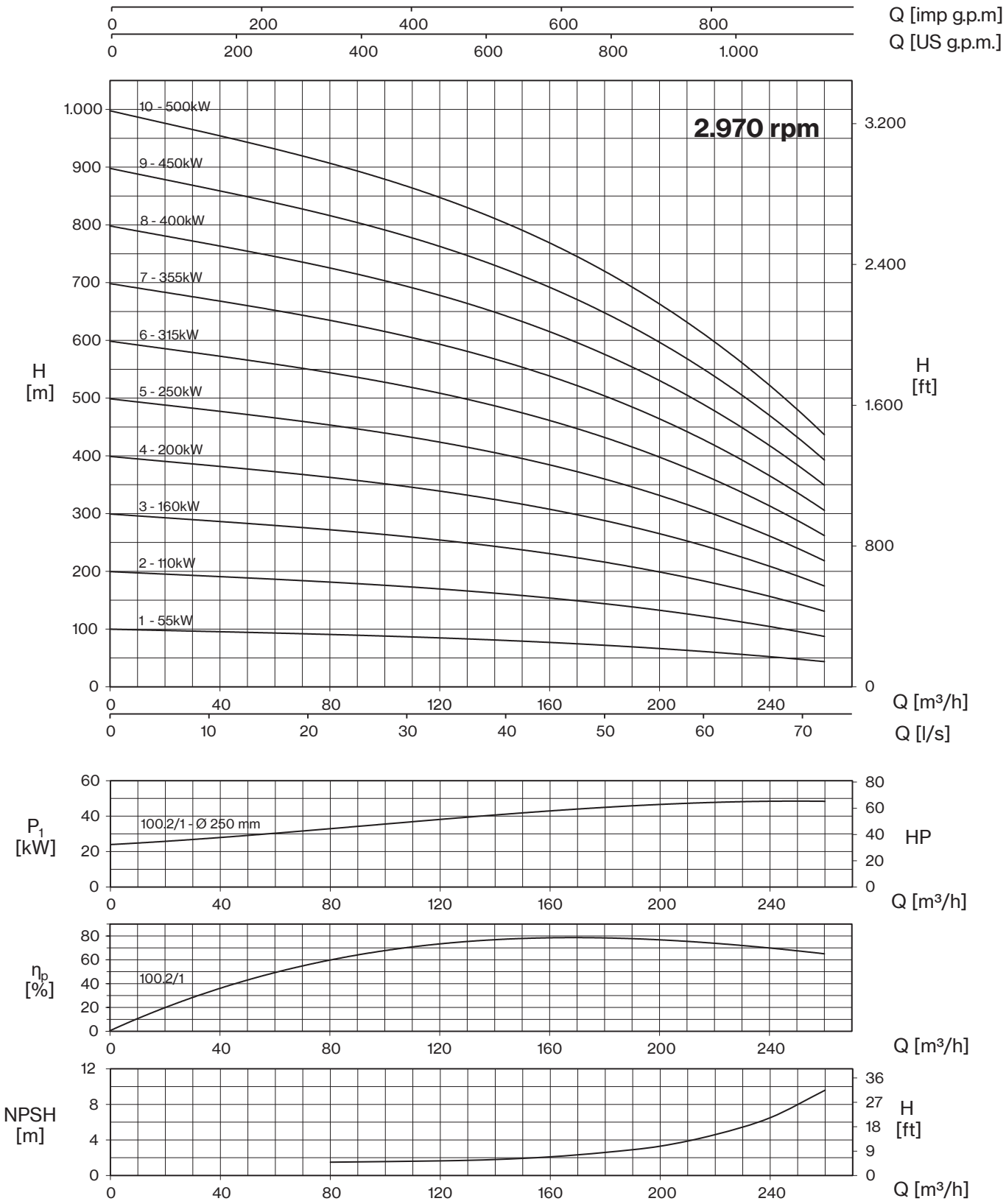
Q [imp g.p.m]
Q [US g.p.m.]
2.970 rpm
10 - 500kW
9 - 450kW
8 - 400kW
7 - 355kW
6 - 315kW
5 - 250kW
4 - 200kW
3 - 160kW
2 - 110kW
1 - 55kW
H [m]
H [ft]
Q [m³/h]
Q [l/s]
P1 [kW]
HP
100.2/1 - Ø 250 mm
ηp [%]
100.2/1
NPSH [m]

100.4
Performance curves

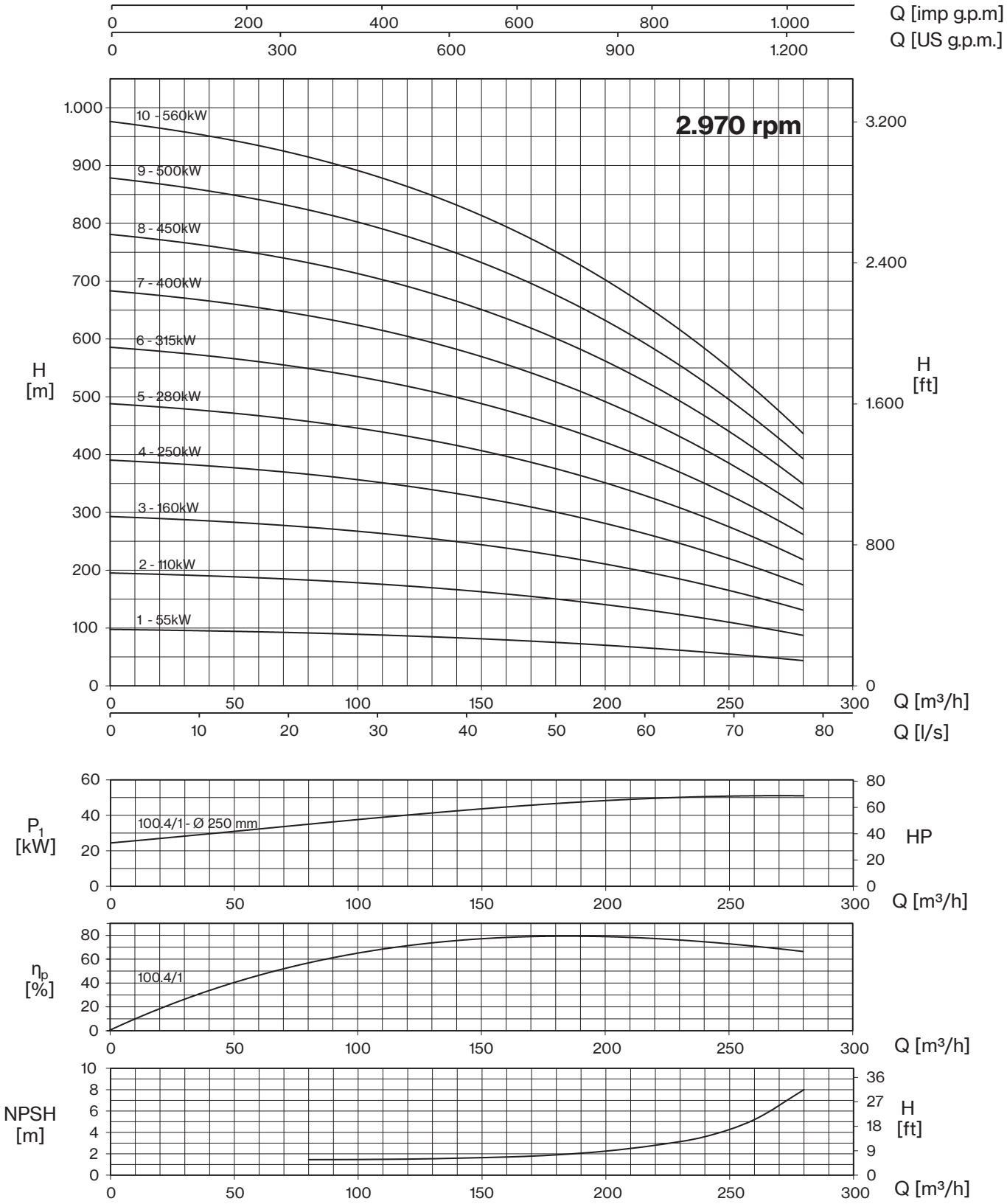

Valid for: p=1 (kg/dm³), viscosity ≤ 20 mm²/sec) - Guarantee values according to ISO 9906, Grade 3B - Head based on SG = 1,000

MARLY

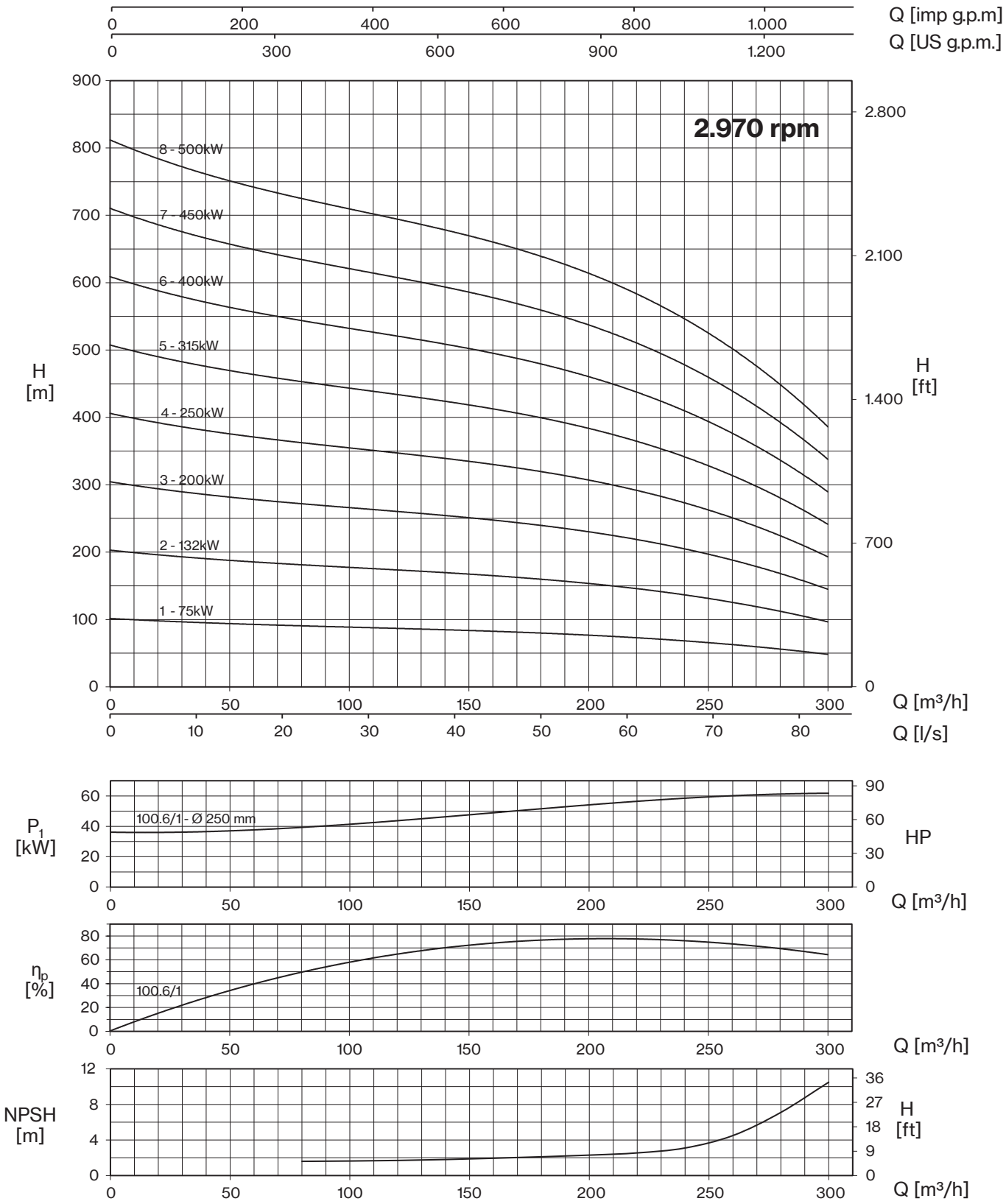
Q [imp g.p.m]
0 200 400 600 800 1.000
Q [US g.p.m.]
0 300 600 900 1.200
2.970 rpm
8 - 500kW
7 - 450kW
6 - 400kW
5 - 315kW
4 - 250kW
3 - 200kW
2 - 132kW
1 - 75kW
H [m]
900 800 700 600 500 400 300 200 100 0
H [ft]
2.800 2.100 1.400 700 0
0 50 100 150 200 250 300
Q [m³/h]
0 10 20 30 40 50 60 70 80
Q [l/s]
P1 [kW]
60 40 20 0
100.6/1 - Ø 250 mm
HP
90 60 30 0
Q [m³/h]
ηp [%]
80 60 40 20 0
100.6/1
Q [m³/h]
NPSH [m]
12 8 4 0
H [ft]
36 27 18 9 0
Q [m³/h]

125.2
Performance curves

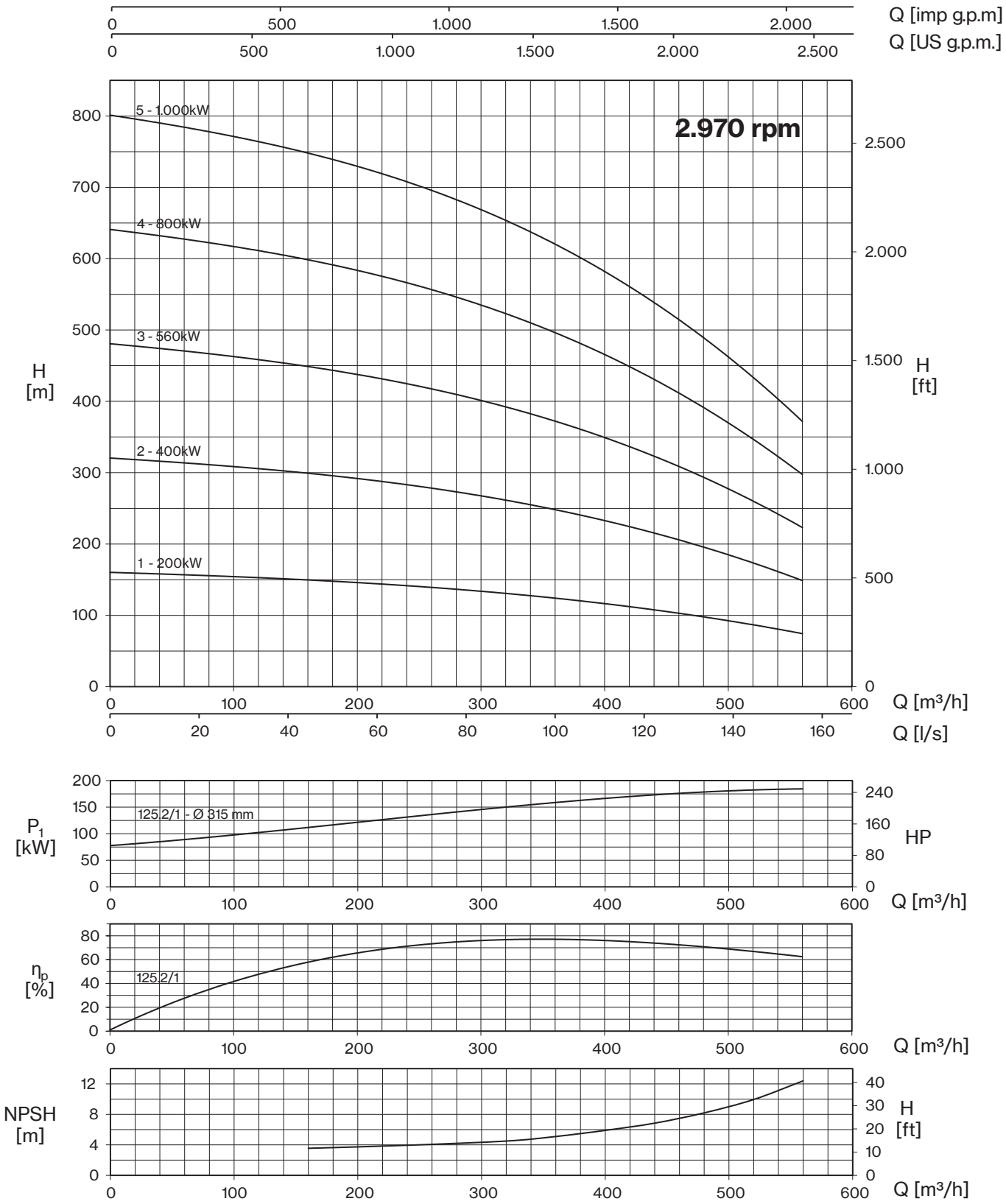

Valid for: p=1 (kg/dm³), viscosity ≤ 20 mm²/sec) - Guarantee values according to ISO 9906, Grade 3B - Head based on SG = 1,000

MARLY

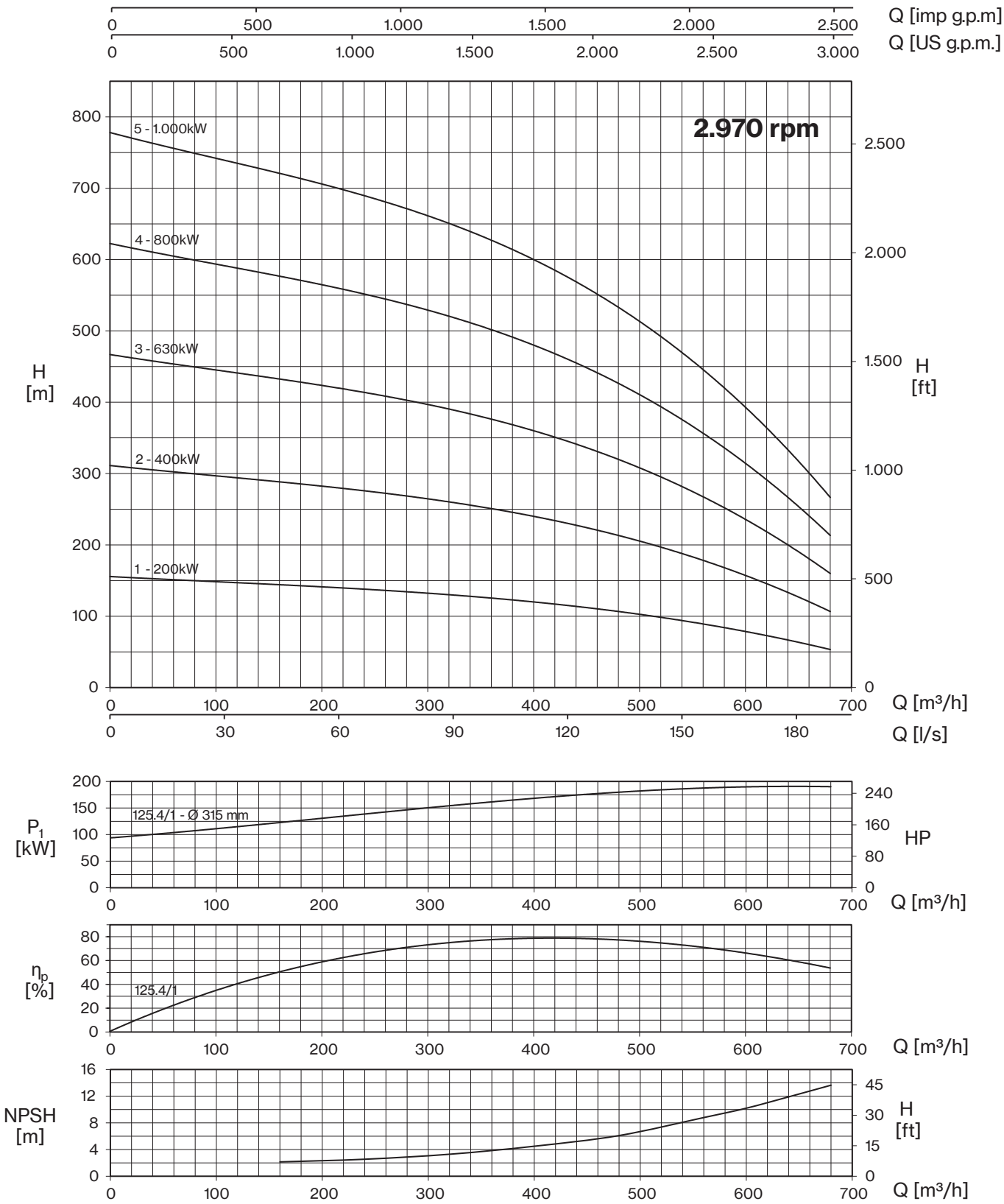
Q [imp g.p.m]
0 500 1.000 1.500 2.000 2.500
Q [US g.p.m.]
0 500 1.000 1.500 2.000 2.500 3.000
2.970 rpm
5 - 1.000kW
4 - 800kW
3 - 630kW
2 - 400kW
1 - 200kW
H [m]
0 100 200 300 400 500 600 700 800
H [ft]
0 500 1.000 1.500 2.000 2.500
Q [m³/h]
0 100 200 300 400 500 600 700
Q [l/s]
0 30 60 90 120 150 180
P1 [kW]
0 50 100 150 200
125.4/1 - Ø 315 mm
HP
0 80 160 240
Q [m³/h]
0 100 200 300 400 500 600 700
ηp [%]
0 20 40 60 80
125.4/1
Q [m³/h]
0 100 200 300 400 500 600 700
NPSH [m]
0 4 8 12 16
H [ft]
0 15 30 45
Q [m³/h]
0 100 200 300 400 500 600 700

125.6
Performance curves

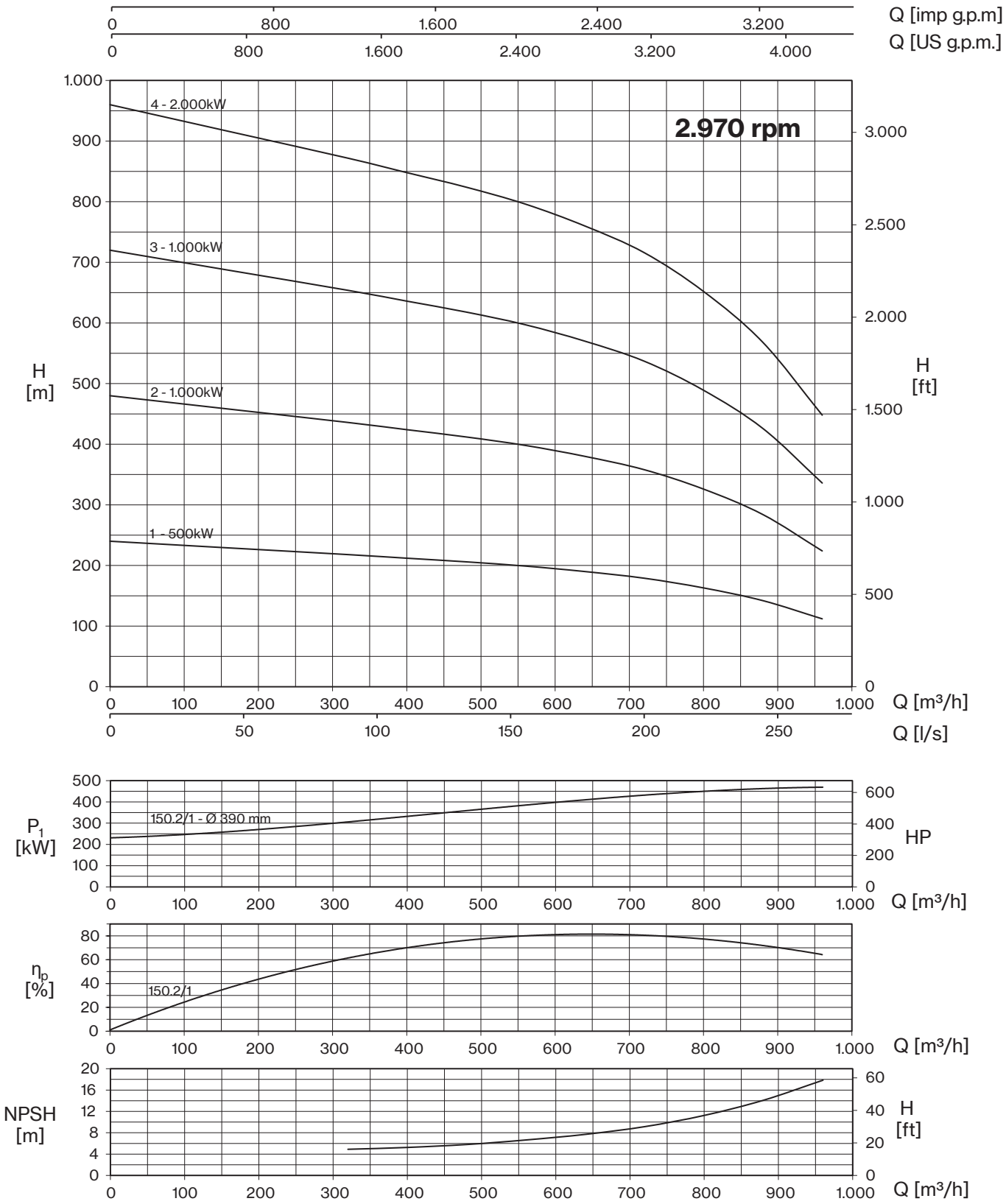

Valid for: p=1 (kg/dm³), viscosity ≤ 20 mm²/sec) - Guarantee values according to ISO 9906, Grade 3B - Head based on SG = 1,000

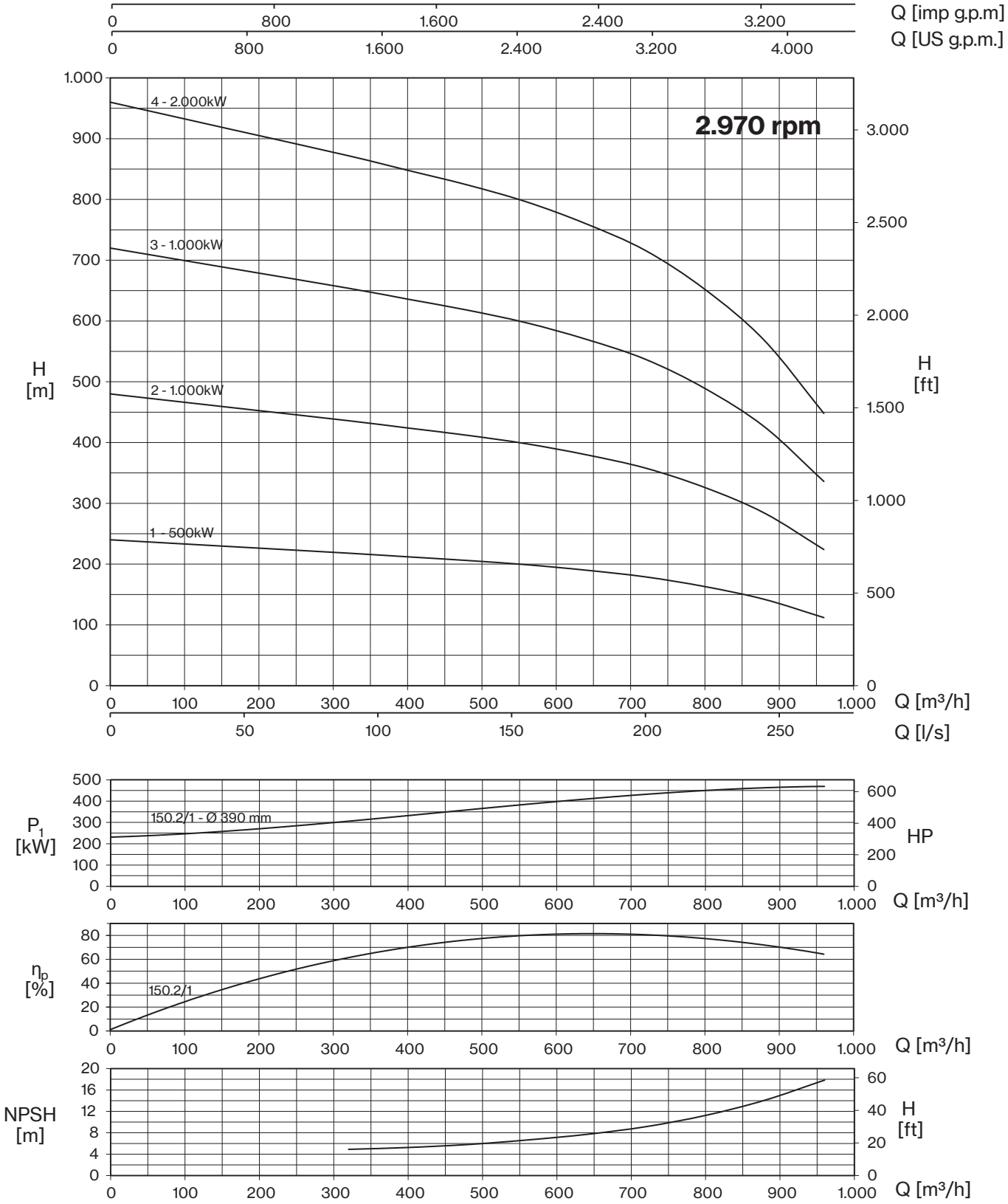
Q [imp g.p.m]
0 800 1.600 2.400 3.200
Q [US g.p.m.]
0 800 1.600 2.400 3.200 4.000
H [m]
H [ft]
4 - 2.000kW
3 - 1.000kW
2 - 1.000kW
1 - 500kW
2.970 rpm
Q [m³/h]
Q [l/s]
P1 [kW]
HP
150.2/1 - Ø 390 mm
ηp [%]
150.2/1
NPSH [m]

150.4
Performance curves

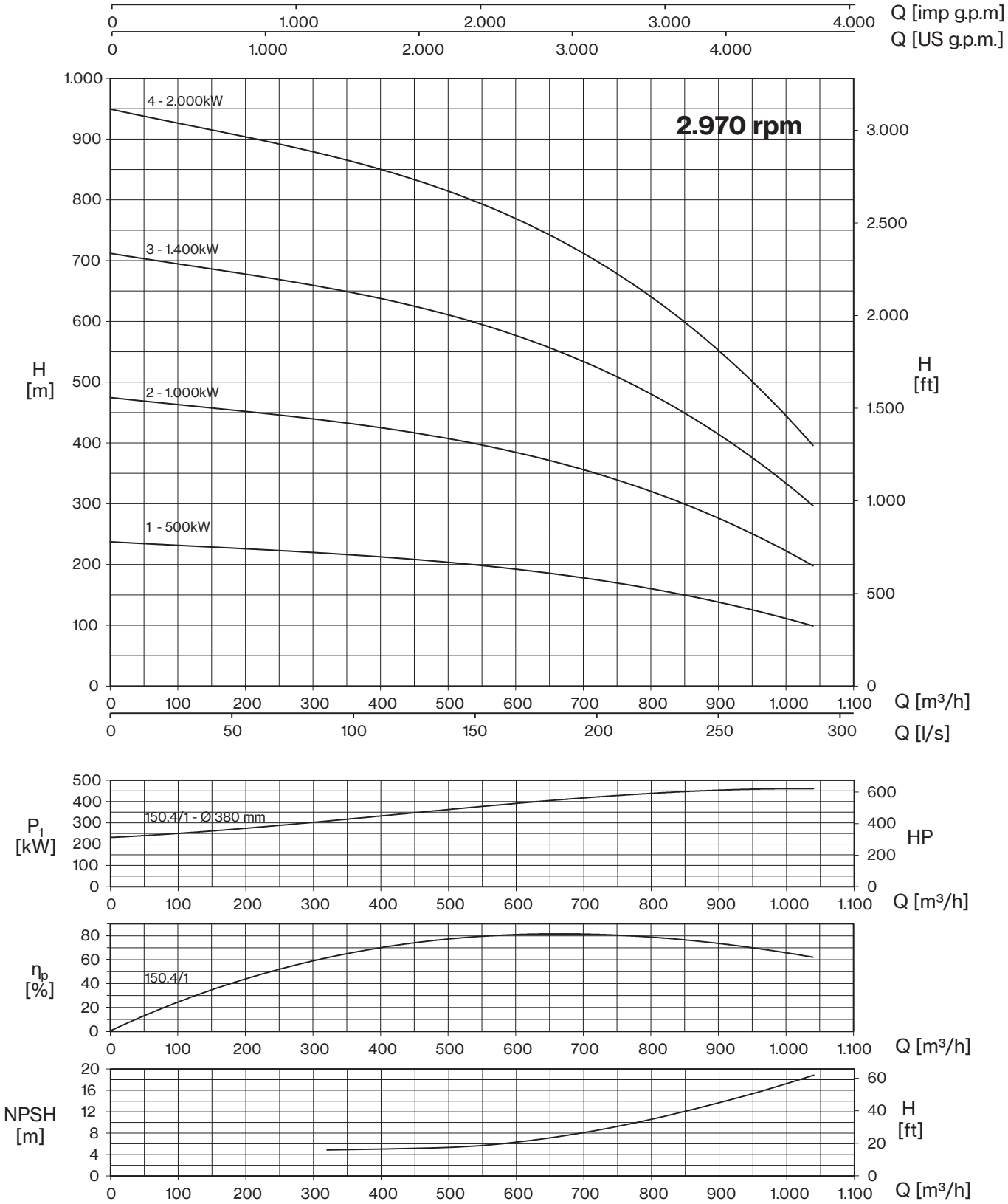

Valid for: p=1 (kg/dm³), viscosity ≤ 20 mm²/sec) - Guarantee values according to ISO 9906, Grade 3B - Head based on SG = 1,000

MARLY

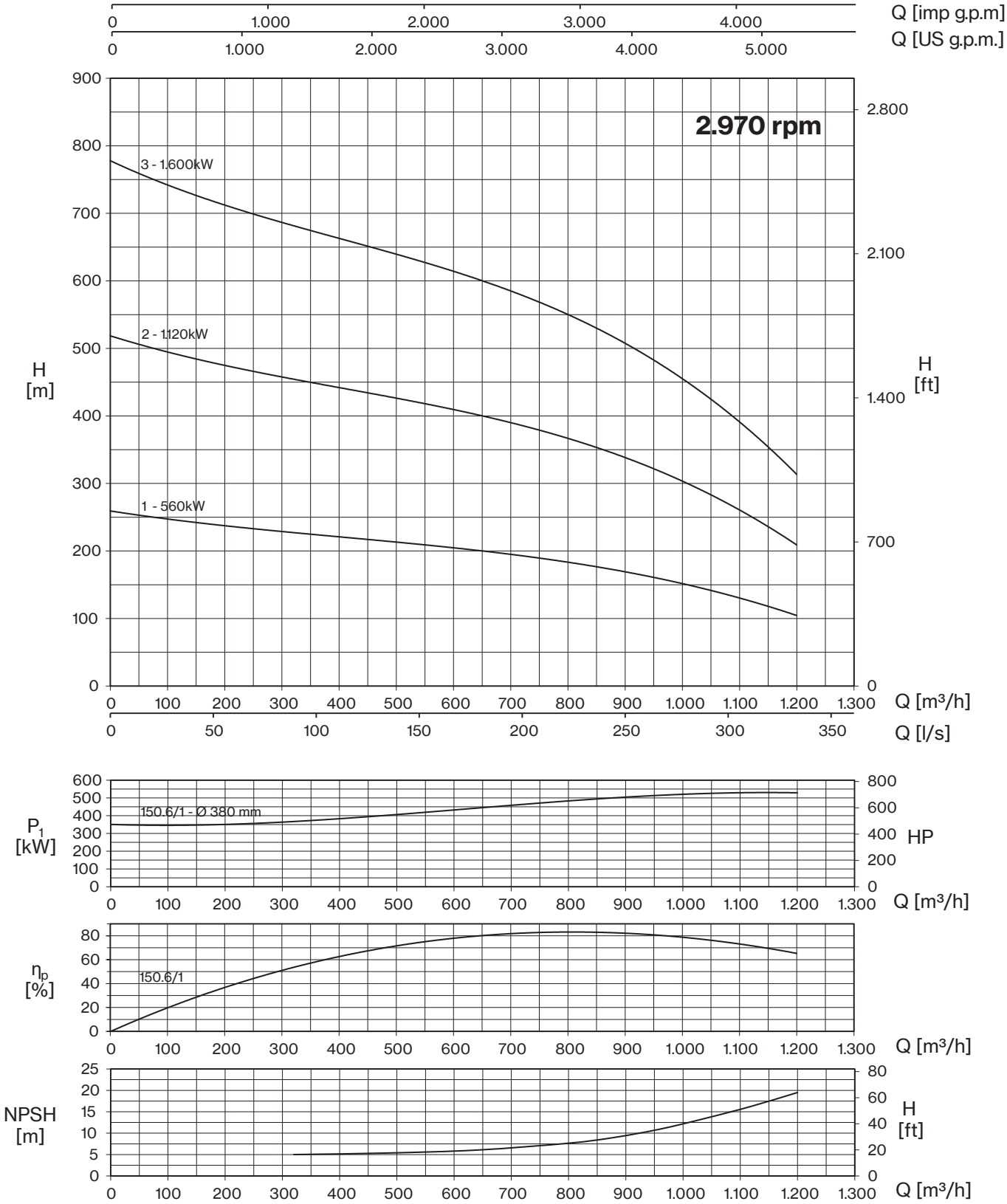
Q [imp g.p.m]
0 1.000 2.000 3.000 4.000
Q [US g.p.m.]
0 1.000 2.000 3.000 4.000 5.000
2.970 rpm
3 - 1.600kW
2 - 1.120kW
1 - 560kW
H [m]
900 800 700 600 500 400 300 200 100 0
H [ft]
2.800 2.100 1.400 700 0
0 100 200 300 400 500 600 700 800 900 1.000 1.100 1.200 1.300
Q [m³/h]
0 50 100 150 200 250 300 350
Q [l/s]
P1 [kW]
600 500 400 300 200 100 0
150.6/1 - Ø 380 mm
HP
800 600 400 200 0
Q [m³/h]
ηp [%]
80 60 40 20 0
150.6/1
Q [m³/h]
NPSH [m]
25 20 15 10 5 0
H [ft]
80 60 40 20 0
Q [m³/h]

MARLY

PUMP DIMENSIONS

HPA

Grease lubrication

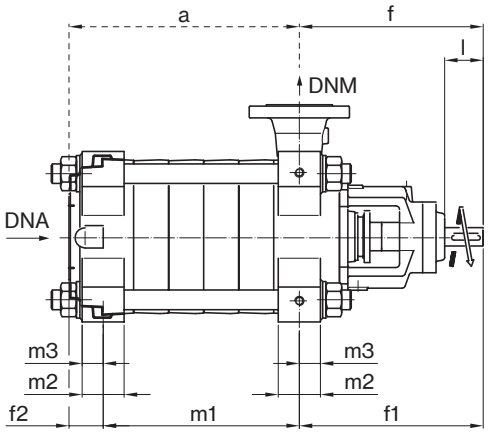

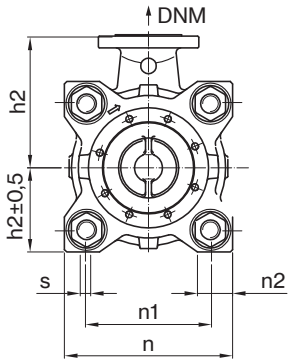

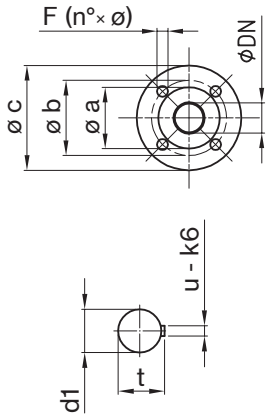

TYPE	a / m1 - pump dimensions (mm)																			
	n. of stages																			
	1	2	3	4	5	6	7	8	9	10	11	12	13	14	15	16	17	18	19	20
HPA 25	115	160	205	250	295	340	385	430	475	520	565	610	655	700	745	790	835	880	925	970
	55	100	145	190	235	280	325	370	415	460	505	550	595	640	685	730	775	820	865	910
HPA 32	140	195	250	305	360	405	470	525	580	635	690	745	800	855	910	965	1020	1075	1130	1185
	70	125	180	235	290	345	400	455	510	565	620	675	730	785	840	895	950	1005	1060	1115
HPA 50	158	220	282	344	406	468	530	592	654	716	778	840	902	964	1026	1088	1150	1212		
	90	152	214	276	338	400	462	524	586	648	710	772	834	896	958	1020	1082	1144		
HPA 80	185	260	335	410	485	560	635	710	785	860	935	1010	1085	1160	1235	1310				
	120	195	270	345	420	495	570	645	720	795	870	945	1020	1095	1170	1245				
HPA 100	220	310	400	490	580	670	760	850	940	1030	1120	1210	1300	1390						
	145	235	325	415	505	595	685	775	865	955	1045	1135	1225	1315						
HPA 125	240	350	460	570	680	790	900	1010	1120	1230	1340	1450								
	155	265	375	485	595	710	815	925	1035	1145	1255	1365								
HPA 150	285	420	555	690	825	960	1095	1230	1365	1500										
	175	310	445	580	715	850	985	1120	1255	1390										

TYPE	pump dimensions (mm)					feet dimensions (mm)						shaft end dimensions (mm)			
	f	f1	f2	h1	h2	m2	m3	n	n1	n2	s	d1	l	t	u
HPA 25	250	250	41	120	165	38	19	240	186	50	M12	18	52	20,5	6
HPA 32	360	360	70	140	200	50	25	280	210	65	M16	22	55	24,5	6
HPA 50	410	410	67	155	225	55	27,5	310	240	65	M16	28	80	31	8
HPA 80	430	430	65	175	250	65	32,5	350	270	75	M20	32	80	35	10
HPA 100	480	480	75	205	315	75	37,5	410	300	90	M20	38	100	41	10
HPA 125	590	590	85	255	350	95	47,5	510	400	110	M24	50	130	53,5	14
HPA 150	660	660	110	305	420	120	60	610	460	140	M27	65	140	69	18

TYPE	suction flange UNI - DIN PN16 (mm)					discharge flange UNI - DIN PN63 (mm)				
	DNA	a	b	c	F	DNM	a	b	c	F
HPA 25	50	102	125	165	4×M16	25	68	100	140	4×18
HPA 32	65	102	125	165	8×M16	32	78	110	155	4×22
HPA 50	100	158	180	220	8×M16	50	102	135	180	4×22
HPA 80	125	188	210	250	8×M16	80	138	170	215	8×22
HPA 100	150	212	240	285	8×M20	100	162	200	250	8×26
HPA 125	200	268	295	340	12×M20	125	188	240	295	8×30
HPA 150	250	320	355	405	12×M24	150	218	280	345	8×33

TYPE	pump weight (Kg)																			
	n. of stages																			
	1	2	3	4	5	6	7	8	9	10	11	12	13	14	15	16	17	18	19	20
HPA 25	28	37	46	55	64	73	82	91	100	109	118	127	136	145	154	163	172	181	190	199
HPA 32	50	65	74	83	92	101	110	119	128	137	146	155	164	173	182	191	200	209	218	227
HPA 50	62	81	100	119	138	157	176	195	214	233	252	271	290	309	328	347	366	385		
HPA 80	87	116	145	174	203	232	261	290	319	348	377	406	435	464	493	522				
HPA 100	174	219	264	309	354	399	444	489	534	579	624	669	714	759						
HPA 125	283	364	445	526	607	688	769	850	931	1012	1093	1174								
HPA 150	509	645	781	917	1053	1189	1325	1461	1597	1733										

HP

Grease lubrication

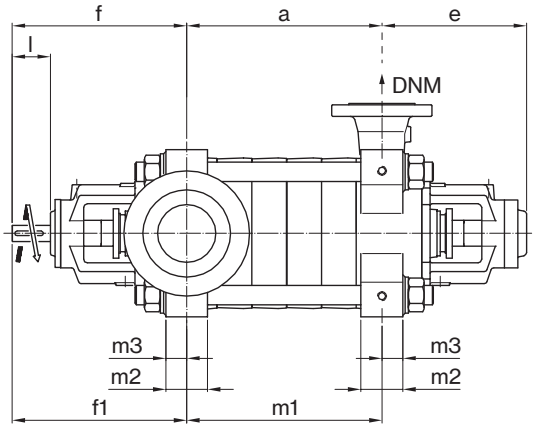

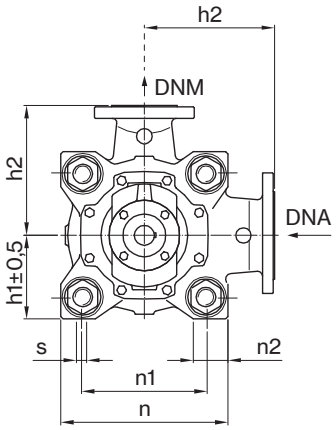

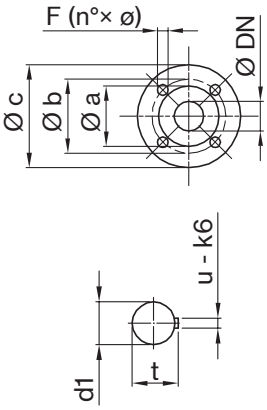

TYPE	a / m1 - pump dimensions (mm)																								
	n. of stages																								
	1	2	3	4	5	6	7	8	9	10	11	12	13	14	15	16	17	18	19	20	21	22	23	24	25
HP 25	55	100	145	190	235	280	325	370	415	460	505	550	595	640	685	730	775	820	865	910	955	1000	1045	1090	1135
HP 32	70	125	180	235	290	345	400	455	510	565	620	675	730	785	840	895	950	1005	1060	1115	1170	1225	1280	1335	1390
HP 50	90	152	214	276	338	400	462	524	586	648	710	772	834	896	958	1020	1082	1144	1206	1268					
HP 80	120	195	270	345	420	495	570	645	720	795	870	945	1020	1095	1170	1245	1320	1395							
HP 100	145	235	325	415	505	595	685	775	865	955	1045	1135	1225	1315	1405	1495									
HP 125	185	295	405	515	625	735	845	955	1065	1175	1285	1395													
HP 150	235	370	505	640	775	910	1045	1180	1315	1450															
HP 250	310	505	700	895	1090	1285	1480	1675																	

TYPE	pump dimensions (mm)					feet dimensions (mm)						shaft end dimensions (mm)			
	e	f	f1	h1	h2	m2	m3	n	n1	n2	s	d1	l	t	u
HP 25	198	239,5	239,5	120	165	38	19	240	186	50	M12	18	52	20,5	6
HP 32	301	300	300	140	200	50	25	280	210	65	M16	28	60	31	8
HP 50	328	340	340	155	225	55	27,5	310	240	65	M16	32	80	35	10
HP 80	344	360	360	175	250	65	32,5	350	270	75	M20	38	80	41	10
HP 100	373	410	410	205	315	75	37,5	410	300	90	M20	42	110	45	12
HP 125	451	514,5	514,5	255	350	95	47,5	510	400	110	M24	55	130	59	16
HP 150	515	552,5	552,5	305	420	120	60	610	460	140	M27	70	140	74,5	20
HP 250	535	580	580	415	550	135	73/90	830	590	265	M42	70	155	74,5	20

TYPE	suction flange UNI - DIN PN16 (mm)					discharge flange UNI - DIN PN63 (mm)				
	DNA	a	b	c	F	DNM	a	b	c	F
HP 25	40	88	110	150	4×18	25	68	100	140	4×18
HP 32	50	102	125	165	4×18	32	78	110	155	4×22
HP 50	80	138	160	200	8×18	50	102	135	180	4×22
HP 80	125	188	210	250	8×18	80	138	170	215	8×22
HP 100	150	212	240	285	8×22	100	162	200	250	8×26
HP 125	200	268	295	340	12×22	125	188	240	295	8×30
HP 150	250	320	355	405	12×26	150	218	280	345	8×33
HP 250	300	378	410	460	12×26	250	345	400	470	12×36

TYPE	pump weight (Kg)																								
	n. of stages																								
	1	2	3	4	5	6	7	8	9	10	11	12	13	14	15	16	17	18	19	20	21	22	23	24	25
HP 25	39	48	57	66	75	84	93	102	111	120	129	138	147	156	165	174	183	192	201	210	219	228	237	246	255
HP 32	72	87	102	117	132	147	162	177	192	207	222	237	252	267	282	297	312	327	342	357	372	387	402	417	432
HP 50	99	118	137	156	175	194	213	232	251	270	289	308	327	346	365	384	403	422	441	460					
HP 80	137	196	225	252	281	310	339	369	398	427	456	485	515	544	573	602	631	660							
HP 100	241	286	331	376	421	466	511	556	601	646	691	736	781	826	871	916									
HP 125	401	482	563	644	725	806	887	968	1049	1130	1211	1292													
HP 150	720	856	992	1128	1264	1400	1536	1672	1808	1944															
HP 250	1247	1563	1879	2195	2511	2827	3143	3459	3775	4091	4407	4723													

HPMA

Oil lubrication

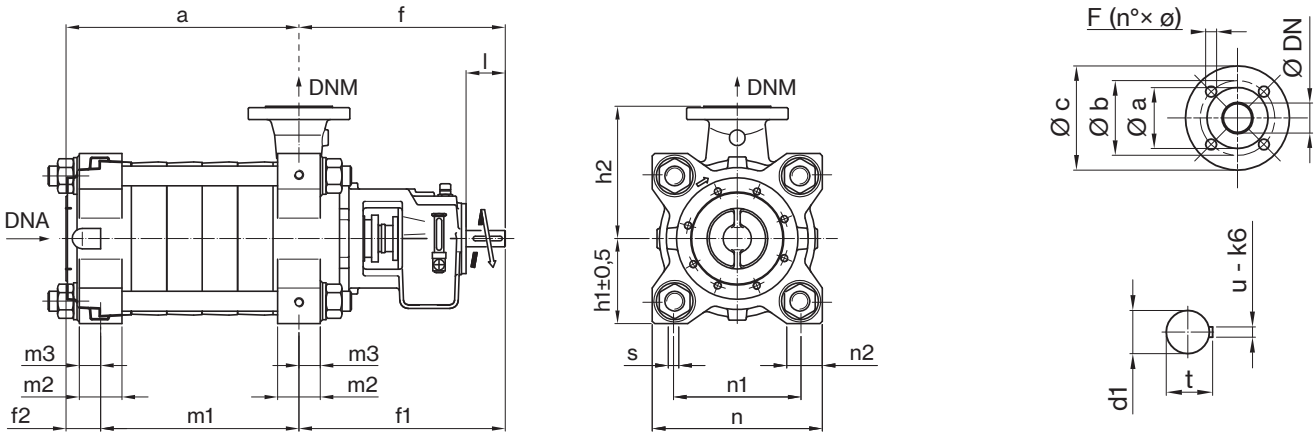

TYPE	a / m1 - pump dimensions (mm)																			
	n. of stages																			
	1	2	3	4	5	6	7	8	9	10	11	12	13	14	15	16	17	18	19	20
HPMA 25	115	160	205	250	295	340	385	430	475	520	565	610	655	700	745	790	835	880	925	970
	55	100	145	190	235	280	325	370	415	460	505	550	595	640	685	730	775	820	865	910
HPMA 32	140	195	250	305	360	405	470	525	580	635	690	745	800	855	910	965	1020	1075	1130	1185
	70	125	180	235	290	345	400	455	510	565	620	675	730	785	840	895	950	1005	1060	1115
HPMA 50	158	220	282	344	406	468	530	592	654	716	778	840	902	964	1026	1088	1150	1212		
	90	152	214	276	338	400	462	524	586	648	710	772	834	896	958	1020	1082	1144		
HPMA 80	185	260	335	410	485	560	635	710	785	860	935	1010	1085	1160	1235	1310				
	120	195	270	345	420	495	570	645	720	795	870	945	1020	1095	1170	1245				
HPMA 100	220	310	400	490	580	670	760	850	940	1030	1120	1210	1300	1390						
	145	235	325	415	505	595	685	775	865	955	1045	1135	1225	1315						
HPMA 125	240	350	460	570	680	790	900	1010	1120	1230	1340	1450								
	155	265	375	485	595	710	815	925	1035	1145	1255	1365								
HPMA 150	285	420	555	690	825	960	1095	1230	1365	1500										
	175	310	445	580	715	850	985	1120	1255	1390										

TYPE	pump dimensions					feet dimensions (mm)						shaft end dimensions (mm)			
	f	f1	f2	h1	h2	m2	m3	n	n1	n2	s	d1	l	t	u
HPMA 25	280	280	41	120	165	38	19	240	186	50	M12	18	52	20,5	6
HPMA 32	395	395	70	140	200	50	25	280	210	65	M16	22	55	24,5	6
HPMA 50	465	465	67	155	225	55	27,5	310	240	65	M16	28	80	31	8
HPMA 80	493	493	65	175	250	65	32,5	350	270	75	M20	32	80	35	10
HPMA 100	545	545	75	205	315	75	37,5	410	300	90	M20	38	110	41	10
HPMA 125	650	650	85	255	350	95	47,5	510	400	110	M24	50	130	53,5	14
HPMA 150	660	660	110	305	420	120	60	610	460	140	M27	65	140	69	18

TYPE	suction flange UNI - DIN PN16 (mm)					discharge flange UNI - DIN PN63 (mm)				
	DNA	a	b	c	F	DNM	a	b	c	F
HPMA 25	50	102	125	165	4×M16	25	68	100	140	4×18
HPMA 32	65	102	125	165	8×M16	32	78	110	155	4×22
HPMA 50	100	158	180	220	8×M16	50	102	135	180	4×22
HPMA 80	125	188	210	250	8×M16	80	138	170	215	8×22
HPMA 100	150	212	240	285	8×M20	100	162	200	250	8×26
HPMA 125	200	268	295	340	12×M20	125	188	240	295	8×30
HPMA 150	250	320	355	405	12×M24	150	218	280	345	8×33

TYPE	pump weight (Kg)																			
	n. of stages																			
	1	2	3	4	5	6	7	8	9	10	11	12	13	14	15	16	17	18	19	20
HPMA 25	33	42	51	60	69	78	87	96	105	114	123	132	141	150	159	168	177	186	195	204
HPMA 32	61	76	91	106	121	136	151	166	181	196	211	226	241	256	271	286	301	316	331	346
HPMA 50	76	95	114	133	152	171	190	209	228	247	266	285	304	323	342	361	380	399		
HPMA 80	120	149	178	207	236	265	294	323	352	381	410	439	468	497	526	555				
HPMA 100	197	242	287	332	377	422	467	512	557	602	647	692	737	782						
HPMA 125	343	424	505	586	667	748	829	910	991	1072	1153	1234								
HPMA 150	727	863	999	1135	1271	1407	1543	1679	1815	1951										

MARLY

HPM

Oil lubrication

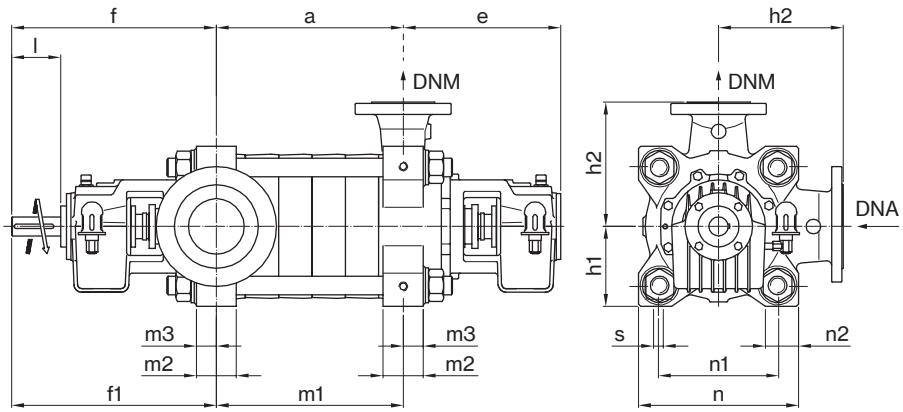

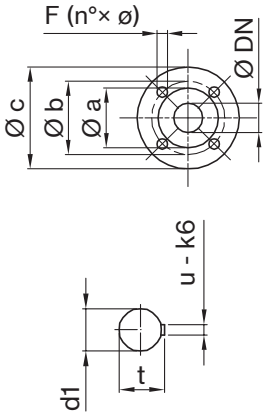

TYPE	a / m1 - pump dimensions (mm)																								
	n. of stages																								
	1	2	3	4	5	6	7	8	9	10	11	12	13	14	15	16	17	18	19	20	21	22	23	24	25
HPM 25	55	100	145	190	235	280	325	370	415	460	505	550	595	640	685	730	775	820	865	910	955	1000	1045	1090	1135
HPM 32	70	125	180	235	290	345	400	455	510	565	620	675	730	785	840	895	950	1005	1060	1115	1170	1225	1280	1335	1390
HPM 50	90	152	214	276	338	400	462	524	586	648	710	772	834	896	958	1020	1082	1144	1206	1268					
HPM 80	120	195	270	345	420	495	570	645	720	795	870	945	1020	1095	1170	1245	1320	1395							
HPM 100	145	235	325	415	505	595	685	775	865	955	1045	1135	1225	1315	1405	1495									
HPM 125	185	295	405	515	625	735	845	955	1065	1175	1285	1395													
HPM 150	235	370	505	640	775	910	1045	1180	1315	1450															
HPM 250	310	505	700	895	1090	1285	1480	1675																	

TYPE	pump dimensions (mm)					feet dimensions (mm)						shaft end dimensions (mm)			
	e	f	f1	h1	h2	m2	m3	n	n1	n2	s	d1	l	t	u
HPM 25	223	270,5	270,5	120	165	38	19	240	186	50	M12	20	58	22,5	6
HPM 32	360	404	404	140	200	50	25	280	210	65	M16	28	60	31	8
HPM 50	387	449	449	155	225	55	27,5	310	240	65	M16	32	80	35	10
HPM 80	406	473	473	175	250	65	32,5	350	270	75	M20	38	80	41	10
HPM 100	435	528	528	205	315	75	37,5	410	300	90	M20	42	110	45	12
HPM 125	521	644	644	255	350	95	47,5	510	400	110	M24	55	130	59	16
HPM 150	517	629,5	629,5	305	420	120	60	610	460	140	M27	70	140	74,5	20
HPM 250	536	649,5	649,5	415	550	135	73/90	830	590	265	M42	70	151,5	74,5	20

TYPE	suction flange UNI - DIN PN16 (mm)					discharge flange UNI - DIN PN63 (mm)				
	DNA	a	b	c	F	DNM	a	b	c	F
HPM 25	40	88	110	150	4×18	25	68	100	140	4×18
HPM 32	50	102	125	165	4×18	32	78	110	155	4×22
HPM 50	80	138	160	200	8×18	50	102	135	180	4×22
HPM 80	125	188	210	250	8×18	80	138	170	215	8×22
HPM 100	150	212	240	285	8×22	100	162	200	250	8×25
HPM 125	200	268	295	340	12×22	125	188	240	295	8×30
HPM 150	250	320	355	405	12×25	150	218	280	345	8×33
HPM 250	300	370	410	460	12×28	250	345	400	470	12×36

TYPE	pump weight (Kg)																								
	n. of stages																								
	1	2	3	4	5	6	7	8	9	10	11	12	13	14	15	16	17	18	19	20	21	22	23	24	25
HPM 25	44	53	62	71	80	89	98	107	116	125	134	143	152	161	170	179	188	197	206	215	224	233	242	251	260
HPM 32	93	108	123	138	153	168	183	198	213	228	243	258	273	288	303	318	333	348	363	378	393	408	423	438	453
HPM 50	129	148	167	186	205	224	243	262	281	300	319	338	357	376	395	414	433	452	471	490					
HPM 80	191	220	249	278	307	336	365	394	423	452	481	510	539	568	597	626	655	684							
HPM 100	281	326	371	416	461	506	551	596	641	686	731	776	821	866	911	956									
HPM 125	486	567	648	729	810	891	972	1053	1134	1215	1296	1377													
HPM 150	969	1105	1241	1377	1513	1649	1785	1921	2057	2193	2329														
HPM 250	1249	1565	1881	2197	2513	2829	3145	3461	3777	4093	4409	4725													

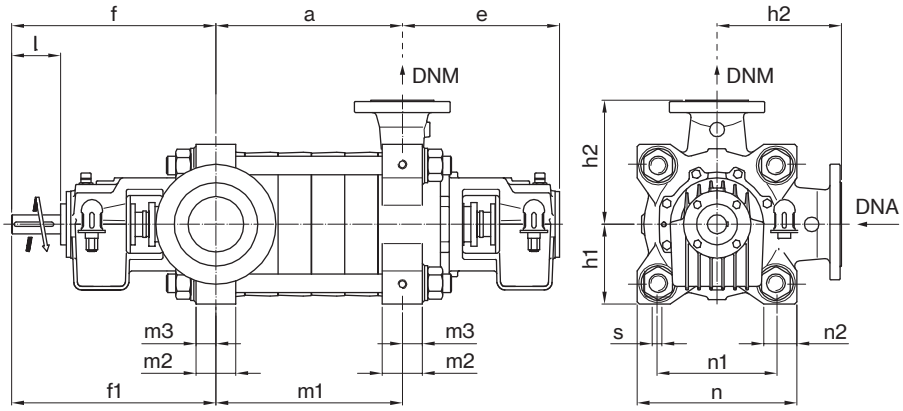

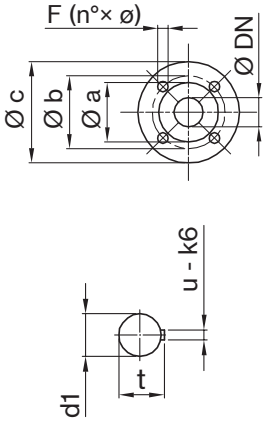

TYPE	a / m1 - pump dimensions (mm)																								
	n. of stages																								
	1	2	3	4	5	6	7	8	9	10	11	12	13	14	15	16	17	18	19	20	21	22	23	24	25
HPR 32	70	125	180	235	290	345	400	455	510	565	620	675	730	785	840	895	950	1005	1060	1115	1170	1225	1280	1335	1390
HPR 50	90	152	214	276	338	400	462	524	586	648	710	772	834	896	958	1020	1082	1144	1206	1268					
HPR 80	120	195	270	345	420	495	570	645	720	795	870	945	1020	1095	1170	1245	1320	1395							
HPR 100	145	235	325	415	505	595	685	775	865	955	1045	1135	1225	1315	1405	1495									
HPR 125	185	295	405	515	625	735	845	955	1065	1175	1285	1395													
HPR 150	235	370	505	640	775	910	1045	1180	1315	1450	1585														

TYPE	pump dimensions (mm)					feet dimensions (mm)						shaft end dimensions (mm)			
	e	f	f1	h1	h2	m2	m3	n	n1	n2	s	d1	l	t	u
HPR 32	360	404	404	140	200	50	25	280	210	65	M16	28	60	31	8
HPR 50	387	449	449	155	225	55	27,5	310	240	65	M16	32	80	35	10
HPR 80	406	473	473	175	250	65	32,5	350	270	75	M20	38	80	41	10
HPR 100	435	528	528	205	315	75	37,5	410	300	90	M20	42	110	45	12
HPR 125	521	644	644	255	350	95	47,5	510	400	110	M24	55	130	59	16
HPR 150	517	629,5	629,5	305	420	120	60	610	460	140	M27	70	140	74,5	20

TYPE	suction flange UNI - DIN PN25 (mm)					discharge flange UNI - DIN PN100 (mm)				
	DNA	a	b	c	F	DNM	a	b	c	F
HPR 32	50	102	125	165	4×18	32	78	110	155	4×22
HPR 50	80	138	160	200	8×18	50	102	145	195	4×26
HPR 80	125	188	220	270	8×26	80	138	180	230	8×26
HPR 100	150	218	250	300	8×26	100	162	210	265	8×30
HPR 125	200	278	310	360	12×26	125	188	250	315	8×33
HPR 150	250	355	370	425	12×30	150	218	290	355	12×33

TYPE	pump weight (Kg)																								
	n. of stages																								
	1	2	3	4	5	6	7	8	9	10	11	12	13	14	15	16	17	18	19	20	21	22	23	24	25
HPR 25	44	53	62	71	80	89	98	107	116	125	134	143	152	161	170	179	188	197	206	215	224	233	242	251	260
HPR 32	93	108	123	138	153	168	183	198	213	228	243	258	273	288	303	318	333	348	363	378	393	408	423	438	453
HPR 50	129	148	167	186	205	224	243	262	281	300	319	338	357	376	395	414	433	452	471	490					
HPR 80	191	220	249	278	307	336	365	394	423	452	481	510	539	568	597	626	655	684							
HPR 100	281	326	371	416	461	506	551	596	641	686	731	776	821	866	911	956									
HPR 125	486	567	648	729	810	891	972	1053	1134	1215	1296	1377													
HPR 150	969	1105	1241	1377	1513	1649	1785	1921	2057	2193	2329														

PUMP + MOTOR DIMENSIONS

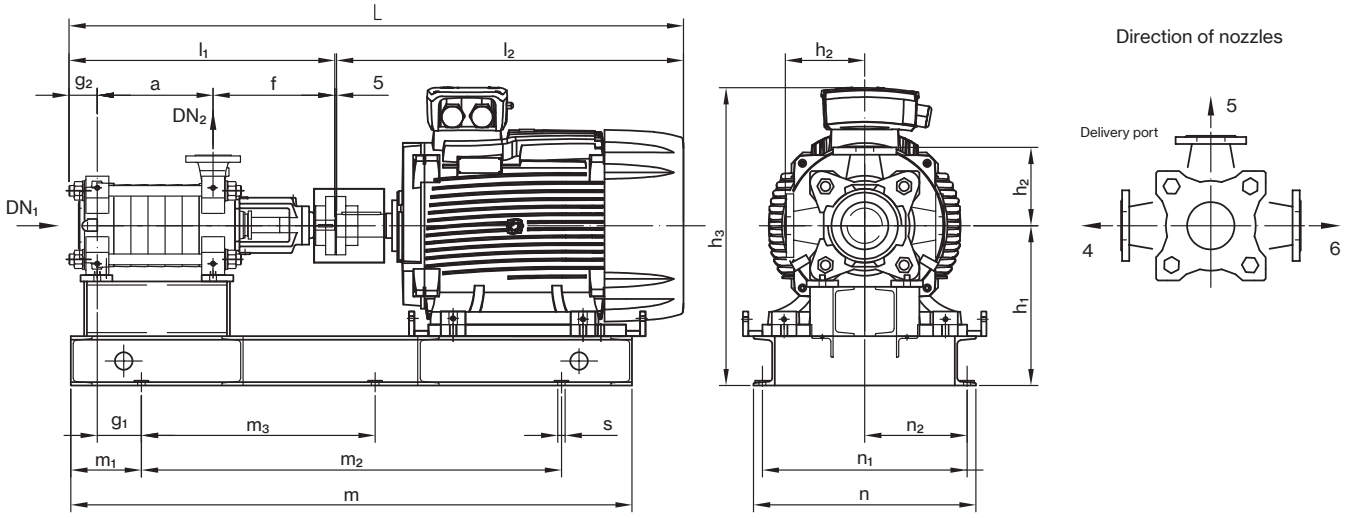

HPA 25

1.450 rpm - Grease lubrication

HPA model	DIMENSIONS (mm)																							
	kW	kg P.	kg M.	kg Tot.	Dn_1	Dn_2	a	f	h_2	L	g_1	g_2	h_1	h_3	l_1	l_2	m	m_1	m_2	m_3	n	n_1	n_2	s
25/1	0,75	28	12	80	50	25	55	250	165	634	100	41	263	393	346	283	600	150	300	-	310	275	137,5	4×17
25/2	0,75	37	12	90	50	25	100	250	165	679	100	41	263	393	391	283	640	150	340	-	310	275	137,5	4×17
25/3	0,75	46	12	100	50	25	145	250	165	724	100	41	263	393	436	283	700	150	400	-	310	275	137,5	4×17
25/4	1,1	55	25	122,1	50	25	190	250	165	769	100	41	263	413	481	283	740	150	440	-	310	275	137,5	4×17
25/5	1,1	64	25	137,1	50	25	235	250	165	814	100	41	283	413	526	283	780	150	480	-	320	280	140	4×19
	1,5	64	30	130	50	25	235	250	165	869	100	41	283	428	526	338	820	150	520	-	320	280	140	4×19
25/6	1,5	73	30	141	50	25	280	250	165	914	100	41	283	428	571	338	860	150	560	-	320	280	140	4×19
25/7	1,5	82	30	152	50	25	325	250	165	959	100	41	283	428	616	338	900	150	600	-	320	280	140	4×19
	2,2	82	36	160	50	25	325	250	165	994	100	41	283	440	616	373	940	150	640	-	320	280	140	4×19
25/8	2,2	91	36	171	50	25	370	250	165	1039	100	41	283	440	661	373	980	150	680	-	320	280	140	4×19
25/9	2,2	100	36	190	50	25	415	250	165	1084	100	41	303	460	706	373	1020	150	720	-	330	290	145	4×19
	3	100	40	192	50	25	415	250	165	1084	100	41	303	460	706	373	1020	150	720	-	330	290	145	4×19
25/10	2,2	109	36	202	50	25	460	250	165	1129	100	41	303	460	751	373	1080	150	780	-	330	290	145	4×19
	3	109	40	204	50	25	460	250	165	1129	100	41	303	460	751	373	1080	150	780	-	330	290	145	4×19
25/11	3	118	40	215	50	25	505	250	165	1174	100	41	303	460	796	373	1120	150	820	-	330	290	145	4×19
25/12	3	127	40	226	50	25	550	250	165	1219	100	41	303	460	841	373	1160	150	860	-	330	290	145	4×19
25/13	3	136	40	236	50	25	595	250	165	1264	100	41	303	460	886	373	1200	150	900	-	330	290	145	4×19
	4	136	46	239	50	25	595	250	165	1281	100	41	303	480	886	390	1220	150	920	-	360	320	160	4×19
25/14	3	145	40	248	50	25	640	250	165	1309	100	41	303	460	931	373	1260	150	960	-	330	290	145	4×19
	4	145	46	251	50	25	640	250	165	1326	100	41	303	480	931	390	1260	150	960	-	360	320	160	4×19
25/15	4	154	46	261	50	25	685	250	165	1371	100	41	303	480	976	390	1300	150	1000	-	360	320	160	4×19
25/16	4	163	46	272	50	25	730	250	165	1416	100	41	303	480	1021	390	1340	150	1040	-	360	320	160	4×19
25/17	4	172	46	284	50	25	775	250	165	1461	100	41	303	480	1066	390	1400	150	1100	-	360	320	160	4×19
	5,5	172	70	301	50	25	775	250	165	1531	100	41	303	500	1066	460	1480	150	1180	-	360	320	160	4×19
25/18	4	181	46	295	50	25	820	250	165	1506	100	41	303	480	1111	390	1440	150	1140	-	360	320	160	4×19
	5,5	181	70	312	50	25	820	250	165	1576	100	41	323	520	1111	460	1520	150	1220	610	360	320	160	6×21
25/19	4	190	46	305	50	25	865	250	165	1551	100	41	303	480	1156	390	1480	150	1180	-	360	320	160	4×19
	5,5	190	70	335	50	25	865	250	165	1621	100	41	323	520	1156	460	1560	150	1260	630	360	320	160	6×21
25/20	5,5	199	70	346	50	25	910	250	165	1666	100	41	323	520	1201	460	1600	150	1300	650	360	320	160	6×21

HPA 32

1.450 rpm - Grease lubrication

HPA model	DIMENSIONS (mm)																							
	kW	kg P.	kg M.	kg Tot.	Dn_1	Dn_2	a	f	h_2	L	g_1	g_2	h_1	h_3	l_1	l_2	m	m_1	m_2	m_3	n	n_1	n_2	s
32/1	0,75	50	12	105	65	32	70	360	200	788	90	70	283	433	500	283	740	150	440	-	310	275	137,5	4×17
	1,1	50	25	113	65	32	70	360	200	843	90	70	303	448	500	338	780	150	480	-	320	280	140	4×19
32/2	1,1	65	25	130	65	32	125	360	200	898	90	70	303	448	555	338	820	150	520	-	320	280	140	4×19
	1,5	65	30	132	65	32	125	360	200	898	90	70	303	448	555	338	820	150	520	-	320	280	140	4×19
	2,2	65	36	134	65	32	125	360	200	933	90	70	303	460	555	373	860	150	560	-	320	280	140	4×19
32/3	1,5	74	30	150	65	32	180	360	200	973	90	70	303	448	610	358	920	150	620	-	320	280	140	4×19
	2,2	74	36	156	65	32	180	360	200	1008	90	70	303	460	610	393	920	150	620	-	320	280	140	4×19
	3	74	40	160	65	32	180	360	200	1008	90	70	303	460	610	393	920	150	620	-	320	280	140	4×19
32/4	2,2	83	36	170	65	32	235	360	200	1063	90	70	303	460	665	393	960	150	660	-	320	280	140	4×19
	3	83	40	174	65	32	235	360	200	1063	90	70	303	460	665	393	960	150	660	-	320	280	140	4×19
	4	83	46	180	65	32	235	360	200	1080	90	70	303	480	665	410	980	150	680	-	320	280	140	4×19
32/5	2,2	92	36	195	65	32	290	360	200	1118	90	70	323	460	720	393	1020	150	720	-	320	280	140	4×19
	3	92	40	199	65	32	290	360	200	1118	90	70	323	460	720	393	1020	150	720	-	320	280	140	4×19
	4	92	46	205	65	32	290	360	200	1135	90	70	323	480	720	410	1040	150	740	-	320	280	140	4×19
32/6	3	101	40	211	65	32	345	360	200	1173	90	70	323	460	775	393	1080	150	780	-	320	280	140	4×19
	4	101	46	217	65	32	345	360	200	1190	90	70	323	480	775	410	1080	150	780	-	320	280	140	4×19
	5,5	101	70	241	65	32	345	360	200	1260	90	70	323	520	775	480	1160	150	860	-	320	280	140	4×19
32/7	4	110	46	235	65	32	400	360	200	1245	90	70	323	480	830	410	1220	150	920	-	320	280	140	4×19
	5,5	110	70	259	65	32	400	360	200	1315	90	70	323	520	830	480	1220	150	920	-	320	280	140	4×19
32/8	4	119	46	267	65	32	455	360	200	1300	90	70	323	480	885	410	1280	150	980	-	320	280	140	4×19
	5,5	119	70	291	65	32	455	360	200	1370	90	70	323	520	885	480	1280	150	980	-	320	280	140	4×19
	7,5	119	57	278	65	32	455	360	200	1406	90	70	323	520	885	516	1280	150	980	-	320	280	140	4×19
32/9	5,5	128	70	282	65	32	510	360	200	1425	90	70	323	520	940	480	1320	150	1020	-	320	280	140	4×19
	7,5	128	57	294	65	32	510	360	200	1461	90	70	323	520	940	516	1320	150	1020	-	320	280	140	4×19
32/10	5,5	137	70	310	65	32	565	360	200	1480	90	70	323	520	995	480	1380	150	1080	-	320	280	140	4×19
	7,5	137	57	322	65	32	565	360	200	1516	90	70	323	520	995	516	1380	150	1080	-	320	280	140	4×19
	11	137	125	390	65	32	565	360	200	1615	90	70	323	578	995	615	1500	150	1200	-	360	320	160	4×19
32/11	5,5	146	70	338	65	32	620	360	200	1535	90	70	323	520	1050	480	1440	150	1140	-	320	320	160	4×19
	7,5	146	57	350	65	32	620	360	200	1571	90	70	323	520	1050	516	1440	150	1140	-	320	320	160	4×19
	11	146	125	418	65	32	620	360	200	1670	90	70	343	578	1050	615	1540	150	1240	620	360	380	160	6×21
32/12	5,5	155	70	355	65	32	675	360	200	1590	90	70	323	520	1105	480	1500	150	2000	-	320	280	140	4×19
	7,5	155	57	367	65	32	675	360	200	1626	90	70	323	520	1105	516	1500	150	2000	-	320	280	140	4×19
	11	155	125	435	65	32	675	360	200	1725	90	70	343	578	1105	615	1620	150	1320	630	360	310	155	6×21
32/13	7,5	164	57	386	65	32	730	360	200	1681	90	70	343	520	1160	516	1680	150	1380	690	360	310	155	6×21
	11	164	125	454	65	32	730	360	200	1780	90	70	343	578	1160	615	1680	150	1380	690	360	310	155	6×21
32/14	7,5	173	57	403	65	32	785	360	200	1736	90	70	343	520	1215	516	1720	150	1420	710	360	310	155	6×21
	11	173	125	471	65	32	785	360	200	1835	90	70	343	578	1215	615	1720	150	1420	710	360	310	155	6×21
32/15	7,5	287	57	410	65	32	840	360	200	1791	90	70	343	520	1270	516	1780	150	1480	740	360	310	155	6×21
	11	182	125	478	65	32	840	360	200	1890	90	70	343	578	1270	615	1780	150	1480	740	360	310	155	6×21
	15	182	150	503	65	32	840	360	200	1985	90	70	343	595	1270	710	1780	150	1480	740	360	310	155	6×21
32/16	11	191	125	506	65	32	895	360	200	1945	90	70	343	578	1325	615	1840	150	1540	770	360	310	155	6×21
	15	191	150	520	65	32	895	360	200	2040	90	70	343	595	1325	710	1840	150	1540	770	360	310	155	6×21
32/17	11	200	125	524	65	32	950	360	200	2000	90	70	343	578	1380	615	1900	150	1600	800	360	310	155	6×21
	15	200	150	538	65	32	950	360	200	2095	90	70	343	595	1380	710	1900	150	1600	800	360	310	155	6×21
32/18	11	209	125	541	65	32	1005	360	200	2055	90	70	343	578	1435	615	1940	150	1640	790	360	310	155	6×21
	15	209	150	555	65	32	1005	360	200	2150	90	70	343	595	1435	710	1940	150	1640	790	360	310	155	6×21
32/19	11	218	125	558	65	32	1060	360	200	2110	90	70	343	578	1490	615	2000	150	1700	850	360	310	155	6×21
	15	218	150	572	65	32	1060	360	200	2205	90	70	343	595	1490	710	2000	150	1700	850	360	310	155	6×21
32/20	11	227	125	598	65	32	1115	360	200	2165	90	70	363	578	1545	615	2060	150	1760	880	360	310	155	6×21
	15	227	150	612	65	32	1115	360	200	2260	90	70	363	595	1545	710	2060	150	1760	880	360	310	155	6×21
	18,5	227	171	651	65	32	1115	360	200	2280	90	70	363	633	1545	730	2140	150	1840	920	450	400	200	6×21

HPA 50

1.450 rpm - Grease lubrication

HPA model	DIMENSIONS (mm)																							
	kW	kg P.	kg M.	kg Tot.	Dn_1	Dn_2	a	f	h_2	L	g_1	g_2	h_1	h_3	l_1	l_2	m	m_1	m_2	m_3	n	n_1	n_2	s
50/1	1,1	62	25	378	100	50	90	410	225	970	90	67	318	463	635	330	860	150	560	-	360	320	160	4×19
	1,5	62	30	383	100	50	90	410	225	998	90	67	318	463	635	358	860	150	560	-	360	320	160	4×19
	2,2	62	36	389	100	50	90	410	225	1033	90	67	318	475	635	393	880	150	580	-	360	320	160	4×19
50/2	2,2	81	36	389	100	50	220	410	225	1095	90	67	318	475	697	393	1000	150	640	-	360	320	160	4×19
	3	81	40	393	100	50	220	410	225	1095	90	67	318	475	697	393	1000	150	640	-	360	320	160	4×19
	4	81	46	399	100	50	220	410	225	1112	90	67	318	495	697	410	1000	150	640	-	360	320	160	4×19
50/3	3	100	40	393	100	50	282	410	225	1157	90	67	338	475	759	393	1060	150	700	-	360	320	160	4×19
	4	100	46	399	100	50	282	410	225	1174	90	67	338	495	759	410	1060	150	700	-	360	320	160	4×19
	5,5	100	70	423	100	50	282	410	225	1244	90	67	338	535	759	480	1140	150	780	-	380	340	170	4×19
50/4	4	119	46	399	100	50	344	410	225	1236	90	67	338	515	821	410	1200	150	840	-	380	340	170	4×19
	5,5	119	70	423	100	50	344	410	225	1306	90	67	338	535	821	480	1200	150	840	-	380	340	170	4×19
	7,5	119	57	410	100	50	344	410	225	1342	90	67	338	535	821	516	1200	150	840	-	380	340	170	4×19
50/5	5,5	138	70	423	100	50	406	410	225	1368	90	67	338	535	883	480	1280	150	900	-	380	340	170	4×19
	7,5	138	57	410	100	50	406	410	225	1404	90	67	338	535	883	516	1280	150	900	-	380	340	170	4×19
	11	138	125	478	100	50	406	410	225	1503	90	67	338	593	883	615	1400	150	1040	-	380	340	170	4×19
50/6	5,5	157	70	423	100	50	468	410	225	1430	90	67	338	535	945	480	1340	150	960	-	380	340	170	4×19
	7,5	157	57	410	100	50	468	410	225	1466	90	67	338	535	945	516	1340	150	960	-	380	340	170	4×19
	11	157	125	478	100	50	468	410	225	1565	90	67	338	593	945	615	1460	150	1100	-	380	340	170	4×19
50/7	7,5	176	57	410	100	50	530	410	225	1528	90	67	358	535	1007	516	1520	150	1160	-	380	340	170	6×21
	11	176	125	478	100	50	530	410	225	1627	90	67	358	593	1007	615	1520	150	1160	-	380	340	170	6×21
	15	176	150	503	100	50	530	410	225	1722	90	67	358	610	1007	710	1520	150	1160	-	380	340	170	6×21
50/8	7,5	195	57	410	100	50	592	410	225	1590	90	67	358	535	1069	516	1580	150	1220	640	380	340	170	6×21
	11	195	125	478	100	50	592	410	225	1689	90	67	358	593	1069	615	1580	150	1220	640	380	340	170	6×21
	15	195	150	503	100	50	592	410	225	1784	90	67	358	610	1069	710	1580	150	1220	640	380	340	170	6×21
50/9	11	214	125	592	100	50	654	410	225	1751	90	67	358	593	1131	615	1640	150	1340	670	380	340	170	6×21
	15	214	150	617	100	50	654	410	225	1846	90	67	358	610	1131	710	1640	150	1340	670	380	340	170	6×21
	18,5	214	171	638	100	50	654	410	225	1866	90	67	358	628	1131	730	1720	150	1420	710	440	400	200	6×21
50/10	11	233	125	592	100	50	716	410	225	1813	90	67	358	613	1193	615	1700	150	1400	700	380	340	170	6×21
	15	233	150	617	100	50	716	410	225	1908	90	67	358	610	1193	710	1700	150	1400	700	380	340	170	6×21
	18,5	233	171	638	100	50	716	410	225	1928	90	67	358	628	1193	730	1780	150	1480	740	440	400	200	6×21
	22	233	190	657	100	50	716	410	225	1978	90	67	358	628	1193	780	1780	150	1480	740	440	400	200	6×21
50/11	11	252	125	592	100	50	778	410	225	1875	90	67	358	613	1255	615	1780	150	1480	740	380	340	170	6×21
	15	252	150	617	100	50	778	410	225	1970	90	67	358	610	1255	710	1780	150	1480	740	380	340	170	6×21
	18,5	252	171	638	100	50	778	410	225	1990	90	67	358	628	1255	730	1840	150	1540	770	440	400	200	6×21
	22	252	190	657	100	50	778	410	225	2040	90	67	358	628	1255	780	1840	150	1540	770	440	400	200	6×21
50/12	11	271	125	592	100	50	840	410	225	1937	90	67	358	613	1317	615	1840	150	1540	730	380	340	170	6×21
	15	271	150	617	100	50	840	410	225	2032	90	67	358	610	1317	710	1840	150	1540	730	380	340	170	6×21
	18,5	271	171	638	100	50	840	410	225	2052	90	67	358	628	1317	730	1900	150	1600	770	440	400	200	6×21
	22	271	190	657	100	50	840	410	225	2102	90	67	358	628	1317	780	1900	150	1600	770	440	400	200	6×21
50/13	15	290	150	617	100	50	902	410	225	2094	90	67	358	610	1379	710	1980	150	1680	800	440	400	200	6×21
	18,5	290	171	638	100	50	902	410	225	2114	90	67	358	628	1379	730	1980	150	1680	800	440	400	200	6×21
	22	290	190	657	100	50	902	410	225	2164	90	67	358	628	1379	780	1980	150	1680	800	440	400	200	6×21
	30	290	255	722	100	50	902	410	225	2155	90	67	378	681	1379	771	2020	150	1720	820	500	460	230	6×21
50/14	15	309	150	617	100	50	896	340	225	2274	90	67	358	610	1559	710	1900	150	1600	800	440	400	200	6×21
	18,5	309	171	638	100	50	896	340	225	2294	90	67	358	628	1559	730	1900	150	1600	800	440	400	200	6×21
	22	309	190	657	100	50	896	340	225	2344	90	67	358	628	1559	780	1900	150	1600	800	440	400	200	6×21
	30	309	255	722	100	50	896	340	225	2335	90	67	358	681	1559	771	1940	150	1640	820	480	440	220	6×21
50/15	15	328	150	638	100	50	958	340	225	2336	90	67	358	610	1621	710	1960	150	1660	830	440	400	200	6×21
	18,5	328	171	659	100	50	958	340	225	2356	90	67	358	628	1621	730	1960	150	1660	830	440	400	200	6×21
	22	328	190	678	100	50	958	340	225	2406	90	67	358	628	1621	780	1960	150	1660	830	440	400	200	6×21
	30	328	255	743	100	50	958	340	225	2397	90	67	358	681	1621	771	2000	150	1700	850	480	440	220	6×21
50/16	18,5	347	171	739	100	50	1020	340	225	2418	90	67	378	648	1683	730	2020	150	1720	860	460	420	210	6×21
	22	347	190	758	100	50	1020	340	225	2468	90	67	378	648	1683	780	2020	150	1720	860	460	420	210	6×21
	30	347	255	823	100	50	1020	340	225	2459	90	67	378	681	1683	771	2060	150	1760	880	480	440	220	6×21
50/17	18,5	366	171	739	100	50	1082	340	225	2480	90	67	378	648	1745	730	2080	150	1780	890	460	420	210	6×21
	22	366	190	758	100	50	1082	340	225	2530	90	67	378	648	1745	780	2080	150	1780	890	460	420	210	6×21
	30	366	255	823	100	50	1082	340	225	2521	90	67	378	681	1745	771	2120	150	1820	910	480	440	220	6×21
	37	366	269	837	100	50	1082	340	225	2565	90	67	408	720	1745	815	2180	150	1880	940	540	500	250	6×21
50/18	18,5	385	171	761	100	50	1144	340	225	2542	90	67	378	648	1807	730	2140	150	1840	920	460	420	210	6×21
	22	385	190	780	100	50	1144	340	225	2592	90	67	378	648	1807	780	2140	150	1840	920	460	420	210	6×21
	30	385	255	845	100	50	1144	340	225	2583	90	67	378	681	1807	771	2180	150	1880	940	480	440	220	6×21
	37	385	269	859	100	50	1144	340	225	2627	90	67	408	720	1807	815	2240	150	1940	970	540	500	250	6×21

HPA model	DIMENSIONS (mm)																							
	kW	kg P.	kg M.	kg Tot.	Dn_1	Dn_2	a	f	h_2	L	g_1	g_2	h_1	h_3	l_1	l_2	m	m_1	m_2	m_3	n	n_1	n_2	s
80/1	1,5	87	30	174	125	80	120	460	250	1008	80	65	338	483	645	358	960	150	660	-	420	380	190	4×19
	2,2	87	36	180	125	80	120	460	250	1043	80	65	338	495	645	393	960	150	660	-	420	380	190	4×19
	3	87	40	184	125	80	120	460	250	1043	80	65	338	495	645	393	960	150	660	-	420	380	190	4×19
	4	87	46	190	125	80	120	460	250	1060	80	65	338	515	645	410	960	150	660	-	420	380	190	4×19
80/2	3	116	40	225	125	80	195	460	250	1118	80	65	358	495	720	393	1120	150	820	-	420	380	190	4×19
	4	116	46	231	125	80	195	460	250	1135	80	65	358	515	720	410	1120	150	820	-	420	380	190	4×19
	5,5	116	70	255	125	80	195	460	250	1205	80	65	358	555	720	480	1120	150	820	-	420	380	190	4×19
	7,5	116	57	242	125	80	195	460	250	1241	80	65	358	555	720	516	1120	150	820	-	420	380	190	4×19
80/3	5,5	145	70	286	125	80	270	460	250	1280	80	65	358	555	795	480	1320	150	1020	-	420	380	190	4×19
	7,5	145	57	273	125	80	270	460	250	1316	80	65	358	555	795	516	1320	150	1020	-	420	380	190	4×19
	11	145	125	341	125	80	270	460	250	1415	80	65	358	613	795	615	1320	150	1020	-	420	380	190	4×19
	15	145	150	366	125	80	270	460	250	1510	80	65	358	610	795	710	1320	150	1020	-	420	380	190	4×19
80/4	7,5	174	57	306	125	80	345	460	250	1391	80	65	358	555	870	516	1380	150	1080	-	420	380	190	4×19
	11	174	125	374	125	80	345	460	250	1490	80	65	358	613	870	615	1380	150	1080	-	420	380	190	4×19
	15	174	150	399	125	80	345	460	250	1585	80	65	358	610	870	710	1380	150	1080	-	420	380	190	4×19
80/5	11	203	125	453	125	80	420	460	250	1565	80	65	358	613	945	615	1460	150	1160	-	420	380	190	4×19
	15	203	150	478	125	80	420	460	250	1660	80	65	358	610	945	710	1460	150	1160	-	420	380	190	4×19
	18,5	203	171	499	125	80	420	460	250	1680	80	65	378	648	945	730	1560	150	1260	630	460	420	210	6×21
80/6	15	232	150	506	125	80	495	460	250	1735	80	65	378	610	1020	710	1620	150	1320	660	460	420	210	6×21
	18,5	232	171	527	125	80	495	460	250	1755	80	65	378	648	1020	730	1620	150	1320	660	460	420	210	6×21
	22	232	190	546	125	80	495	460	250	1805	80	65	378	648	1020	780	1620	150	1320	660	460	420	210	6×21
	30	232	255	611	125	80	495	460	250	1796	80	65	378	681	1020	771	1660	150	1360	680	500	460	230	6×21
80/7	15	261	150	539	125	80	570	460	250	1810	80	65	378	610	1095	710	1700	150	1400	700	460	420	210	6×21
	18,5	261	171	560	125	80	570	460	250	1830	80	65	378	648	1095	730	1700	150	1400	700	460	420	210	6×21
	22	261	190	579	125	80	570	460	250	1880	80	65	378	648	1095	780	1700	150	1400	700	460	420	210	6×21
	30	261	255	644	125	80	570	460	250	1871	80	65	378	681	1095	771	1740	150	1440	720	500	460	230	6×21
80/8	18,5	290	171	593	125	80	645	460	250	1905	80	65	378	648	1170	730	1820	150	1520	760	500	460	230	6×21
	22	290	190	612	125	80	645	460	250	1955	80	65	378	648	1170	780	1820	150	1520	760	500	460	230	6×21
	30	290	255	677	125	80	645	460	250	1946	80	65	378	681	1170	771	1820	150	1520	760	500	460	230	6×21
80/9	22	319	190	651	125	80	720	460	250	2030	80	65	378	648	1245	780	1900	150	1600	800	500	460	230	6×21
	30	319	255	716	125	80	720	460	250	2021	80	65	378	681	1245	771	1900	150	1600	800	500	460	230	6×21
	37	319	269	730	125	80	720	460	250	2065	80	65	383	695	1245	815	1940	150	1640	820	540	500	250	6×21
80/10	22	348	190	700	125	80	795	460	250	2105	80	65	378	648	1320	780	1960	150	1660	830	500	460	230	6×21
	30	348	255	765	125	80	795	460	250	2096	80	65	378	681	1320	771	1960	150	1660	830	500	460	230	6×21
	37	348	269	779	125	80	795	460	250	2140	80	65	403	695	1320	815	2020	150	1720	860	540	500	250	6×21
80/11	30	377	255	817	125	80	870	460	250	2171	80	65	403	681	1395	771	2100	150	1800	900	540	500	250	6×21
	37	377	269	831	125	80	870	460	250	2215	80	65	403	695	1395	815	2100	150	1800	900	540	500	250	6×21
	45	377	353	915	125	80	870	460	250	2220	80	65	403	715	1395	820	2100	150	1800	900	540	500	250	6×21
80/12	30	406	255	846	125	80	945	460	250	2246	80	65	403	681	1470	771	2160	150	1860	930	540	500	250	6×21
	37	406	269	860	125	80	945	460	250	2290	80	65	403	695	1470	815	2160	150	1860	930	540	500	250	6×21
	5,5	406	70	661	125	80	945	460	250	2295	80	65	403	715	1470	820	2160	150	1860	930	540	500	250	6×21
80/13	30	435	255	875	125	80	1020	460	250	2321	80	65	403	681	1545	771	2240	150	1940	970	540	500	250	6×21
	37	435	269	889	125	80	1020	460	250	2365	80	65	403	695	1545	815	2240	150	1940	970	540	500	250	6×21
	45	435	353	973	125	80	1020	460	250	2370	80	65	403	715	1545	820	2240	150	1940	970	540	500	250	6×21
	55	435	450	1070	125	80	1020	460	250	2460	80	65	433	788	1545	910	2320	150	2020	1010	600	560	280	6×21
80/14	37	464	269	924	125	80	1095	460	250	2440	80	65	403	695	1620	815	2320	150	2020	1010	540	500	250	6×21
	45	464	353	1008	125	80	1095	460	250	2445	80	65	403	715	1620	820	2320	150	2020	1010	540	500	250	6×21
	55	464	450	1105	125	80	1095	460	250	2535	80	65	433	788	1620	910	2400	150	2100	1050	600	560	280	6×21
80/15	37	493	269	953	125	80	1170	460	250	2515	80	65	403	695	1695	815	2400	150	2100	1050	540	500	250	6×21
	45	493	353	1037	125	80	1170	460	250	2520	80	65	403	715	1695	820	2400	150	2100	1050	540	500	250	6×21
	55	493	450	1134	125	80	1170	460	250	2610	80	65	433	788	1695	910	2460	150	2160	1080	600	560	280	6×21
	75	493	605	1289	125	80	1170	460	250	2685	80	65	493	891	1695	985	2550	150	2250	750	660	620	310	8×21
80/16	37	522	269	988	125	80	1245	460	250	2590	80	65	403	695	1770	815	2480	150	2180	1090	540	500	250	6×21
	45	522	353	1072	125	80	1245	460	250	2595	80	65	403	715	1770	820	2480	150	2180	1090	540	500	250	6×21
	55	522	450	1169	125	80	1245	460	250	2685	80	65	453	788	1770	910	2550	150	2250	750	600	560	280	8×21
	75	522	605	1324	125	80	1245	460	250	2760	80	65	493	891	1770	985	2640	150	2340	780	660	620	310	8×21

HPA 100

1.450 rpm - Grease lubrication

HPA model	DIMENSIONS (mm)																							
	kW	kg P.	kg M.	kg Tot.	Dn_1	Dn_2	a	f	h_2	L	g_1	g_2	h_1	h_3	l_1	l_2	m	m_1	m_2	m_3	n	n_1	n_2	s
100/1	5,5	174	70	319	150	100	145	480	315	1185	70	75	408	605	700	480	1100	150	800	-	480	440	220	4×19
	7,5	174	57	319	150	100	145	480	315	1221	70	75	408	605	700	516	1100	150	800	-	480	440	220	4×19
	11	174	125	396	150	100	145	480	315	1320	70	75	408	663	700	615	1220	150	920	-	480	440	220	4×19
100/2	11	219	125	471	150	100	235	480	315	1410	70	75	408	663	790	615	1320	150	1020	-	480	440	220	4×19
	15	219	150	496	150	100	235	480	315	1505	70	75	408	660	790	710	1320	150	1020	-	480	440	220	4×19
	18,5	219	171	517	150	100	235	480	315	1525	70	75	408	678	790	730	1380	150	1080	-	500	460	230	4×19
100/3	15	264	150	563	150	100	325	480	315	1595	70	75	408	663	880	710	1460	150	1160	-	500	460	230	4×19
	18,5	264	171	584	150	100	325	480	315	1615	70	75	408	660	880	730	1460	150	1160	-	500	460	230	4×19
	22	264	190	603	150	100	325	480	315	1665	70	75	408	678	880	780	1460	150	1160	-	500	460	230	4×19
	30	264	255	668	150	100	325	480	315	1656	70	75	408	711	880	771	1500	150	1200	-	500	460	230	4×19
100/4	18,5	309	171	644	150	100	415	480	315	1705	70	75	428	660	970	730	1580	150	1280	640	500	460	230	6×21
	22	309	190	663	150	100	415	480	315	1755	70	75	428	678	970	780	1580	150	1280	640	500	460	230	6×21
	30	309	255	728	150	100	415	480	315	1746	70	75	428	711	970	771	1580	150	1280	640	500	460	230	6×21
	37	309	269	742	150	100	415	480	315	1790	70	75	413	725	970	815	1660	150	1360	680	520	480	240	6×21
100/5	22	354	190	718	150	100	505	480	315	1845	70	75	413	678	1060	780	1760	150	1460	730	520	480	240	6×21
	30	354	255	783	150	100	505	480	315	1836	70	75	413	711	1060	771	1760	150	1460	730	520	480	240	6×21
	37	354	269	797	150	100	505	480	315	1880	70	75	413	725	1060	815	1760	150	1460	730	520	480	240	6×21
	45	354	353	881	150	100	505	480	315	1885	70	75	413	725	1060	820	1760	150	1460	730	520	480	240	6×21
100/6	30	399	255	836	150	100	595	480	315	1926	70	75	413	711	1150	771	1840	150	1540	770	520	480	240	6×21
	37	399	269	850	150	100	595	480	315	1970	70	75	413	725	1150	815	1840	150	1540	770	520	480	240	6×21
	45	399	353	934	150	100	595	480	315	1975	70	75	413	725	1150	820	1840	150	1540	770	520	480	240	6×21
	55	399	450	1031	150	100	595	480	315	2065	70	75	413	768	1150	910	1920	150	1620	810	560	520	260	6×21
100/7	37	444	269	903	150	100	685	480	315	2060	70	75	413	725	1240	815	1940	150	1640	820	520	480	240	6×21
	45	444	353	987	150	100	685	480	315	2065	70	75	413	725	1240	820	1940	150	1640	820	520	480	240	6×21
	55	444	450	1084	150	100	685	480	315	2155	70	75	413	725	1240	910	2000	150	1700	850	560	520	260	6×21
100/8	45	489	353	1040	150	100	775	480	315	2155	70	75	433	725	1330	820	2080	150	1780	890	580	540	270	6×21
	55	489	450	1137	150	100	775	480	315	2245	70	75	433	725	1330	910	2080	150	1780	890	580	540	270	6×21
	75	489	605	1292	150	100	775	480	315	2320	70	75	463	861	1330	985	2180	150	1880	940	640	600	300	6×21
100/9	45	534	353	1090	150	100	865	480	315	2245	70	75	433	725	1420	820	2180	150	1880	940	580	540	270	6×21
	55	534	450	1187	150	100	865	480	315	2335	70	75	433	725	1420	910	2180	150	1880	940	580	540	270	6×21
	75	534	605	1342	150	100	865	480	315	2410	70	75	463	861	1420	985	2260	150	1960	980	640	600	300	6×21
100/10	45	579	353	1140	150	100	955	480	315	2335	70	75	463	775	1510	820	2360	150	2060	1030	640	600	300	6×21
	55	579	450	1237	150	100	955	480	315	2425	70	75	463	818	1510	910	2360	150	2060	1030	640	600	300	6×21
	75	579	605	1392	150	100	955	480	315	2500	70	75	463	861	1510	985	2360	150	2060	1030	640	600	300	6×21
	90	579	700	1487	150	100	955	480	315	2550	70	75	463	861	1510	1035	2360	150	2060	1030	640	600	300	6×21
100/11	55	624	450	1287	150	100	1045	480	315	2515	70	75	463	818	1600	910	2440	150	2140	1070	640	600	300	6×21
	75	624	605	1442	150	100	1045	480	315	2590	70	75	463	861	1600	985	2440	150	2140	1070	640	600	300	6×21
	90	624	700	1537	150	100	1045	480	315	2640	70	75	463	861	1600	1035	2440	150	2140	1070	640	600	300	6×21
100/12	55	669	450	1342	150	100	1135	480	315	2605	70	75	483	818	1690	910	2550	150	2250	750	640	600	300	8×21
	75	669	605	1497	150	100	1135	480	315	2680	70	75	483	861	1690	985	2550	150	2250	750	640	600	300	8×21
	90	669	700	1592	150	100	1135	480	315	2730	70	75	483	861	1690	1035	2550	150	2250	750	640	600	300	8×21
	110	669	925	1817	150	100	1135	480	315	2855	70	75	543	1073	1690	1160	2700	150	2400	800	740	700	350	8×21
100/13	75	714	605	1554	150	100	1225	480	315	2770	70	75	483	881	1780	985	2640	150	2340	780	640	600	300	8×21
	90	714	700	1649	150	100	1225	480	315	2820	70	75	483	881	1780	1035	2640	150	2340	780	640	600	300	8×21
	110	714	925	1874	150	100	1225	480	315	2945	70	75	543	1073	1780	1160	2790	150	2490	830	740	700	350	8×21
100/14	75	759	605	1611	150	100	1315	480	315	2860	70	75	483	881	1870	985	2730	150	2430	810	640	600	300	8×21
	90	759	700	1706	150	100	1315	480	315	2910	70	75	483	881	1870	1035	2730	150	2430	810	640	600	300	8×21
	110	759	925	1931	150	100	1315	480	315	3035	70	75	543	1073	1870	1160	2880	150	2580	860	740	700	350	8×21

HPA model	DIMENSIONS (mm)																							
	kW	kg P.	kg M.	kg Tot.	Dn_1	Dn_2	a	f	h_2	L	g_1	g_2	h_1	h_3	l_1	l_2	m	m_1	m_2	m_3	n	n_1	n_2	s
125/1	18,5	283	171	608	200	125	155	590	350	1565	50	85	498	768	830	730	1460	150	1160	-	600	560	280	4×19
	22	283	190	627	200	125	155	590	350	1615	50	85	498	768	830	780	1460	150	1160	-	600	560	280	4×19
	30	283	255	692	200	125	155	590	350	1606	50	85	498	801	830	771	1460	150	1160	-	600	560	280	4×19
125/2	37	364	269	787	200	125	265	590	350	1760	50	85	518	830	940	815	1700	150	1400	700	600	560	280	6×21
	45	364	353	871	200	125	265	590	350	1765	50	85	518	830	940	820	1700	150	1400	700	600	560	280	6×21
	55	364	450	968	200	125	265	590	350	1855	50	85	518	873	940	910	1700	150	1400	700	600	560	280	6×21
125/3	45	445	353	968	200	125	375	590	350	1875	50	85	518	830	1050	820	1900	150	1600	800	640	600	300	6×21
	55	445	450	1065	200	125	375	590	350	1965	50	85	518	873	1050	910	1900	150	1600	800	640	600	300	6×21
	75	445	605	1220	200	125	375	590	350	2040	50	85	518	916	1050	985	1900	150	1600	800	640	600	300	6×21
125/4	75	526	605	1316	200	125	485	590	350	2150	50	85	518	916	1160	985	2200	150	1900	950	720	680	340	6×21
	90	526	700	1411	200	125	485	590	350	2200	50	85	518	916	1160	1035	2200	150	1900	950	720	680	340	6×21
	110	526	925	1636	200	125	485	590	350	2325	50	85	518	1048	1160	1160	2200	150	1900	950	720	680	340	6×21
125/5	90	607	700	1492	200	125	595	590	350	2310	50	85	518	916	1270	1035	2300	150	2000	1000	720	680	340	6×21
	110	607	925	1717	200	125	595	590	350	2435	50	85	518	1048	1270	1160	2300	150	2000	1000	720	680	340	6×21
	132	607	1180	1972	200	125	595	590	350	2465	50	85	518	1048	1270	1190	2300	150	2000	1000	720	680	340	6×21
125/6	110	688	925	1814	200	125	705	590	350	2545	50	85	518	1048	1380	1160	2420	150	2120	1060	720	680	340	6×21
	132	688	1180	2069	200	125	705	590	350	2575	50	85	518	1048	1380	1190	2420	150	2120	1060	720	680	340	6×21
	160	688	1161	2050	200	125	705	590	350	2705	50	85	518	1048	1380	1320	2420	150	2120	1060	720	680	340	6×21
125/7	132	769	1180	2162	200	125	845	590	350	2715	50	85	538	1048	1520	1190	2520	150	2220	740	720	680	340	8×21
	160	769	1161	2143	200	125	845	590	350	2845	50	85	538	1048	1520	1320	2520	150	2220	740	720	680	340	8×21
	200	769	1241	2223	200	125	845	590	350	2845	50	85	538	1048	1520	1320	2520	150	2220	740	720	680	340	8×21
125/8	132	850	1180	2253	200	125	925	590	350	2795	50	85	538	1048	1600	1190	2640	150	2340	780	720	680	340	8×21
	160	850	1161	2234	200	125	925	590	350	2925	50	85	538	1048	1600	1320	2640	150	2340	780	720	680	340	8×21
	200	850	1241	2314	200	125	925	590	350	2925	50	85	538	1048	1600	1320	2640	150	2340	780	720	680	340	8×21
125/9	160	931	1161	2321	200	125	1035	590	350	3035	50	85	538	1048	1710	1320	2760	150	2460	820	720	680	340	8×21
	200	931	1241	2401	200	125	1035	590	350	3035	50	85	538	1048	1710	1320	2760	150	2460	820	720	680	340	8×21
	250	931	1870	3030	200	125	1035	590	350	3215	50	85	562	1217	1710	1500	2910	150	2610	870	840	800	400	8×21
125/10	200	1012	1241	2489	200	125	1145	590	350	3145	50	85	538	1048	1820	1320	2850	150	2550	850	720	680	340	8×21
	250	1012	1870	3118	200	125	1145	590	350	3325	50	85	582	1217	1820	1500	3030	150	2730	910	840	800	400	8×21
125/11	200	1093	1241	2578	200	125	1255	590	350	3255	50	85	582	1048	1930	1320	3150	150	2850	950	840	800	400	8×21
	250	1093	1870	3207	200	125	1255	590	350	3435	50	85	582	1217	1930	1500	3150	150	2850	950	840	800	400	8×21
	315	1093	2090	3427	200	125	1255	590	350	3435	50	85	582	1217	1930	1500	3150	150	2850	950	840	800	400	8×21
125/12	250	1174	1870	3300	200	125	1365	590	350	3545	50	85	582	1217	2040	1500	3240	150	2940	980	840	800	400	8×21
	315	1174	2090	3520	200	125	1365	590	350	3545	50	85	582	1217	2040	1500	3240	150	2940	980	840	800	400	8×21

HPA 150

1.450 rpm - Grease lubrication

HPA model	DIMENSIONS (mm)																							
	kW	kg P.	kg M.	kg Tot.	Dn_1	Dn_2	a	f	h_2	L	g_1	g_2	h_1	h_3	l_1	l_2	m	m_1	m_2	m_3	n	n_1	n_2	s
150/1	30	509	255	942	250	150	175	660	420	1721	40	110	533	836	945	771	1720	150	1420	710	720	680	340	6×21
	37	509	269	956	250	150	175	660	420	1765	40	110	533	845	945	815	1720	150	1420	710	720	680	340	6×21
	45	509	353	1040	250	150	175	660	420	1770	40	110	533	845	945	820	1720	150	1420	710	720	680	340	6×21
	55	509	450	1137	250	150	175	660	420	1860	40	110	533	888	945	910	1720	150	1420	710	720	680	340	6×21
	75	509	605	1292	250	150	175	660	420	1935	40	110	533	931	945	985	1720	150	1420	710	720	680	340	6×21
150/2	2,2	645	605	1439	250	150	310	660	420	2070	40	110	553	951	1080	985	2040	150	1740	870	720	680	340	6×21
	90	645	700	1534	250	150	310	660	420	2120	40	110	553	951	1080	1035	2040	150	1740	870	720	680	340	6×21
	110	645	925	1759	250	150	310	660	420	2245	40	110	553	1083	1080	1160	2040	150	1740	870	720	680	340	6×21
	132	645	1180	2014	250	150	310	660	420	2275	40	110	553	1083	1080	1190	2040	150	1740	870	720	680	340	6×21
150/3	90	781	700	1684	250	150	445	660	420	2255	40	110	553	951	1215	1035	2160	150	1860	930	720	680	340	6×21
	110	781	925	1909	250	150	445	660	420	2380	40	110	553	1083	1215	1160	2160	150	1860	930	720	680	340	6×21
	132	781	1180	2164	250	150	445	660	420	2410	40	110	553	1083	1215	1190	2160	150	1860	930	720	680	340	6×21
	160	781	1161	2145	250	150	445	660	420	2540	40	110	553	1083	1215	1320	2160	150	1860	930	720	680	340	6×21
	200	781	1241	2225	250	150	445	660	420	2540	40	110	553	1083	1215	1320	2160	150	1860	930	720	680	340	6×21
150/4	160	917	1161	2298	250	150	580	660	420	2675	40	110	573	1103	1350	1320	2490	150	2190	730	840	800	400	8×21
	200	917	1241	2378	250	150	580	660	420	2675	40	110	573	1103	1350	1320	2490	150	2190	730	840	800	400	8×21
	250	917	1870	3007	250	150	580	660	420	2855	40	110	573	1228	1350	1500	2490	150	2190	730	840	800	400	8×21
	315	917	2090	3227	250	150	580	660	420	2855	40	110	573	1228	1350	1500	2490	150	2190	730	840	800	400	8×21
150/5	200	1053	1241	2532	250	150	715	660	420	2810	40	110	573	1103	1485	1320	2610	150	2310	770	840	800	400	8×21
	250	1053	1870	3161	250	150	715	660	420	2990	40	110	573	1228	1485	1500	2610	150	2310	770	840	800	400	8×21
	315	1053	2090	3381	250	150	715	660	420	2990	40	110	573	1228	1485	1500	2610	150	2310	770	840	800	400	8×21
	365	1053	2050	3341	250	150	715	660	420	3300	40	110	573	1118	1485	1810	2610	150	2310	770	840	800	400	8×21
150/6	250	1189	1870	3314	250	150	850	660	420	3125	40	110	573	1228	1620	1500	2730	150	2430	810	840	800	400	8×21
	315	1189	2090	3534	250	150	850	660	420	3125	40	110	573	1228	1620	1500	2730	150	2430	810	840	800	400	8×21
	365	1189	2050	3494	250	150	850	660	420	3435	40	110	573	1118	1620	1810	2730	150	2430	810	840	800	400	8×21
	400	1189	2350	3794	250	150	850	660	420	3610	40	110	573	1148	1620	1985	2730	150	2430	810	840	800	400	8×21
150/7	315	1325	2090	3688	250	150	985	660	420	3260	40	110	573	1228	1755	1500	2880	150	2580	860	840	800	400	8×21
	365	1325	2050	3648	250	150	985	660	420	3570	40	110	573	1118	1755	1810	2880	150	2580	860	840	800	400	8×21
	400	1325	2350	3948	250	150	985	660	420	3745	40	110	573	1148	1755	1985	2880	150	2580	860	840	800	400	8×21
	470	1325	2550	4148	250	150	985	660	420	3745	40	110	573	1148	1755	1985	2880	150	2580	860	840	800	400	8×21
	560	1325	2750	4348	250	150	985	660	420	3745	40	110	573	1148	1755	1985	2880	150	2580	860	840	800	400	8×21
150/8	365	1461	2050	3798	250	150	1120	660	420	3705	40	110	593	1138	1890	1810	3030	150	2730	910	840	800	400	8×21
	400	1461	2350	4098	250	150	1120	660	420	3880	40	110	593	1168	1890	1985	3030	150	2730	910	840	800	400	8×21
	470	1461	2090	3838	250	150	1120	660	420	3880	40	110	593	1168	1890	1985	3030	150	2730	910	840	800	400	8×21
	560	1461	2050	3798	250	150	1120	660	420	3880	40	110	593	1168	1890	1985	3030	150	2730	910	840	800	400	8×21
	600	1461	3400	5148	250	150	1120	660	420	4020	40	110	652	1262	1890	2125	3480	150	3180	1060	980	940	470	8×21
150/9	400	1597	2350	4247	250	150	1255	660	420	4015	40	110	593	1168	2025	1985	3150	150	2850	950	840	800	400	8×21
	470	1597	2090	3987	250	150	1255	660	420	4015	40	110	593	1168	2025	1985	3150	150	2850	950	840	800	400	8×21
	560	1597	2050	3947	250	150	1255	660	420	4015	40	110	652	1227	2025	1985	3600	150	3300	1100	980	940	470	8×21
	600	1597	3400	5297	250	150	1255	660	420	4155	40	110	652	1262	2025	2125	3600	150	3300	1100	980	940	470	8×21
150/10	470	1733	2090	4145	250	150	1390	660	420	4150	40	110	593	1168	2160	1985	3270	150	2970	990	840	800	400	8×21
	560	1733	2050	4105	250	150	1390	660	420	4150	40	110	593	1168	2160	1985	3270	150	2970	990	840	800	400	8×21
	600	1733	3400	5455	250	150	1390	660	420	4290	40	110	652	1262	2160	2125	3720	150	3420	1140	980	940	470	8×21
	680	1733	3600	5655	250	150	1390	660	420	4290	40	110	652	1262	2160	2125	3720	150	3420	1140	980	940	470	8×21

HPA 25

2.950 rpm - Grease lubrication

HPA model	DIMENSIONS (mm)																							
	kW	kg P.	kg M.	kg Tot.	Dn_1	Dn_2	a	f	h_2	L	g_1	g_2	h_1	h_3	l_1	l_2	m	m_1	m_2	m_3	n	n_1	n_2	s
25/1	1,1	28	18	76	50	25	55	250	165	634	100	41	263	393	346	283	640	150	340	-	310	275	137,5	4×17
	1,5	28	23	81	50	25	55	250	165	681	100	41	263	408	346	330	640	150	340	-	310	275	137,5	4×17
	2,2	28	26	84	50	25	55	250	165	689	100	41	263	408	346	338	640	150	340	-	310	275	137,5	4×17
25/2	2,2	37	23	95	50	25	100	250	165	769	100	41	263	420	391	373	700	150	400	-	310	275	137,5	4×17
	3	37	26	98	50	25	100	250	165	769	100	41	263	420	391	373	700	150	400	-	310	275	137,5	4×17
	4	37	35	107	50	25	100	250	165	769	100	41	263	420	391	373	700	150	400	-	310	275	137,5	4×17
	5,5	37	43	115	50	25	100	250	165	786	100	41	263	440	391	390	720	150	420	-	310	275	137,5	4×17
25/3	4	46	35	123	50	25	145	250	165	814	100	41	283	420	436	373	760	150	460	-	320	280	140	4×19
	5,5	46	66	154	50	25	145	250	165	831	100	41	283	460	436	390	760	150	460	-	320	280	140	4×19
	7,5	46	73	161	50	25	145	250	165	831	100	41	283	480	436	390	760	150	460	-	320	280	140	4×19
25/4	7,5	55	73	170	50	25	190	250	165	876	100	41	283	480	481	390	800	150	500	-	320	280	140	4×19
	11	55	120	217	50	25	190	250	165	982	100	41	283	480	481	496	880	150	580	-	320	280	140	4×19
25/5	11	64	120	234	50	25	235	250	165	1027	100	41	283	480	526	496	920	150	620	-	320	280	140	4×19
25/6	11	73	120	243	50	25	280	250	165	1072	100	41	283	480	571	496	980	150	680	-	320	280	140	4×19
	15	73	132	255	50	25	280	250	165	1191	100	41	318	573	571	615	1100	150	800	-	400	360	180	4×19
25/7	15	82	132	264	50	25	325	250	165	1236	100	41	318	573	616	615	1140	150	840	-	400	360	180	4×19
	18,5	82	150	282	50	25	325	250	165	1331	100	41	318	570	616	710	1140	150	840	-	400	360	180	4×19
25/8	15	91	132	290	50	25	370	250	165	1281	100	41	318	573	661	615	1200	150	900	-	400	360	180	4×19
	18,5	91	150	308	50	25	370	250	165	1376	100	41	318	570	661	710	1200	150	900	-	400	360	180	4×19
25/9	18,5	100	150	317	50	25	415	250	165	1421	100	41	318	570	706	710	1240	150	940	-	400	360	180	4×19
	22	100	205	372	50	25	415	250	165	1441	100	41	318	588	706	730	1300	150	1000	-	420	380	190	4×19
25/10	18,5	109	150	343	50	25	460	250	165	1466	100	41	318	570	751	710	1280	150	980	-	400	360	180	4×19
	22	109	205	398	50	25	460	250	165	1486	100	41	318	588	751	730	1340	150	1040	-	420	380	190	4×19
25/11	22	118	205	407	50	25	505	250	165	1531	100	41	318	588	796	730	1400	150	1100	-	420	380	190	4×19
	30	118	250	452	50	25	505	250	165	1572	100	41	338	641	796	771	1440	150	1140	-	480	440	220	4×19
25/12	22	127	205	427	50	25	550	250	165	1576	100	41	318	588	841	730	1440	150	1140	-	420	380	190	4×19
	30	127	250	472	50	25	550	250	165	1617	100	41	338	641	841	771	1480	150	1180	-	480	440	220	4×19
25/13	30	136	250	481	50	25	595	250	165	1662	100	41	358	661	886	771	1520	150	1220	610	480	440	220	6×21
25/14	30	145	250	490	50	25	640	250	165	1707	100	41	358	661	931	771	1580	150	1280	640	480	440	220	6×21
25/15	30	154	250	512	50	25	685	250	165	1752	100	41	358	661	976	771	1620	150	1320	660	480	440	220	6×21
	37	154	270	532	50	25	685	250	165	1752	100	41	358	661	976	771	1620	150	1320	660	480	440	220	6×21
25/16	30	163	250	521	50	25	730	250	165	1797	100	41	358	661	1021	771	1660	150	1360	680	480	440	220	6×21
	37	163	270	541	50	25	730	250	165	1797	100	41	358	661	1021	771	1660	150	1360	680	480	440	220	6×21
25/17	37	172	270	550	50	25	775	250	165	1842	100	41	358	661	1066	771	1700	150	1400	700	480	440	220	6×21
25/18	37	181	270	570	50	25	820	250	165	1887	100	41	358	661	1111	771	1760	150	1460	730	480	440	220	6×21
	45	181	315	615	50	25	820	250	165	1966	100	41	383	695	1111	850	1780	150	1480	740	520	480	240	6×21
25/19	37	190	270	579	50	25	865	250	165	1932	100	41	358	661	1156	771	1800	150	1500	750	480	440	220	6×21
	45	190	315	624	50	25	865	250	165	2011	100	41	383	695	1156	850	1820	150	1520	760	520	480	240	6×21
25/20	37	199	270	603	50	25	910	250	165	1977	100	41	358	661	1201	771	1840	150	1540	770	480	440	220	6×21
	45	199	315	648	50	25	910	250	165	2056	100	41	383	695	1201	850	1860	150	1560	780	520	480	240	6×21

HPA 32

2.950 rpm - Grease lubrication

HPA model	DIMENSIONS (mm)																							
	kW	kg P.	kg M.	kg Tot.	Dn_1	Dn_2	a	f	h_2	L	g_1	g_2	h_1	h_3	l_1	l_2	m	m_1	m_2	m_3	n	n_1	n_2	s
32/1	2,2	50	26	93	50	32	70	300	200	1030	90	237	303	448	667	358	740	150	440	-	320	280	140	4×19
	3	50	26	102	50	32	70	300	200	1065	90	237	303	460	667	393	740	150	440	-	320	280	140	4×19
	4	50	35	110	50	32	70	300	200	1082	90	237	303	480	667	410	740	150	440	-	320	280	140	4×19
	5,5	50	43	133	50	32	70	360	200	915	90	70	323	480	500	410	800	150	500	-	320	280	140	4×19
	7,5	50	73	149	50	32	70	360	200	985	90	70	323	500	500	480	880	150	580	-	320	280	140	4×19
32/2	4	65	35	156	50	32	125	300	200	1137	90	237	303	480	722	410	880	150	580	-	320	280	140	4×19
	5,5	65	43	179	50	32	125	300	200	1137	90	237	303	480	722	410	880	150	580	-	320	280	140	4×19
	7,5	65	73	186	50	32	125	300	200	1207	90	237	303	500	722	480	880	150	580	-	320	280	140	4×19
	11	65	120	269	50	32	125	300	200	1342	90	237	303	558	722	615	1000	150	700	-	360	320	160	4×19
	15	65	132	269	50	32	125	300	200	1342	90	237	303	558	722	615	1000	150	700	-	360	320	160	4×19
32/3	11	74	120	280	50	32	180	300	200	1397	90	237	323	558	777	615	1060	150	760	-	360	320	160	4×19
	15	74	132	292	50	32	180	300	200	1397	90	237	323	558	777	615	1060	150	760	-	360	320	160	4×19
	18,5	74	150	310	50	32	180	300	200	1492	90	237	323	575	777	710	1060	150	760	-	360	320	160	4×19
	22	74	205	346	50	32	180	300	200	1512	90	237	323	593	777	730	1140	150	840	-	440	400	200	4×19
32/4	15	83	132	290	50	32	235	300	200	1452	90	237	323	558	832	615	1180	150	880	-	440	400	200	4×19
	18,5	83	150	308	50	32	235	300	200	1547	90	237	323	575	832	710	1180	150	880	-	440	400	200	4×19
	22	83	205	363	50	32	235	300	200	1567	90	237	323	593	832	730	1180	150	880	-	440	400	200	4×19
	30	83	250	423	50	32	235	300	200	1608	90	237	338	641	832	771	1220	150	920	-	480	440	220	4×19
32/5	18,5	92	150	341	50	32	290	300	200	1602	90	237	338	575	887	710	1280	150	980	-	480	440	220	4×19
	22	92	205	396	50	32	290	300	200	1622	90	237	338	593	887	730	1280	150	980	-	480	440	220	4×19
	30	92	250	441	50	32	290	300	200	1663	90	237	338	641	887	771	1280	150	980	-	480	440	220	4×19
	37	92	270	467	50	32	290	300	200	1663	90	237	338	641	887	771	1280	150	980	-	480	440	220	4×19
32/6	30	101	250	465	50	32	345	300	200	1718	90	237	338	641	942	771	1340	150	1040	-	480	440	220	4×19
	37	101	270	485	50	32	345	300	200	1718	90	237	338	641	942	771	1340	150	1040	-	480	440	220	4×19
	45	101	315	569	50	32	345	300	200	1767	90	237	363	675	942	820	1360	150	1060	-	510	470	235	4×19
32/7	30	110	250	483	50	32	400	300	200	1773	90	237	338	641	997	771	1400	150	1100	-	480	440	220	4×19
	37	110	270	503	50	32	400	300	200	1773	90	237	338	641	997	771	1400	150	1100	-	480	440	220	4×19
	45	110	315	586	50	32	400	300	200	1822	90	237	363	641	997	820	1420	150	1120	-	510	470	235	4×19
	55	110	420	675	50	32	400	300	200	1912	90	237	393	748	997	910	1500	150	1200	-	560	520	260	4×19
32/8	37	119	270	559	50	32	455	300	200	1828	90	237	363	641	1052	771	1480	150	1180	-	510	470	235	4×19
	45	119	315	604	50	32	455	300	200	1877	90	237	363	641	1052	820	1480	150	1180	-	510	470	235	4×19
	55	119	420	707	50	32	455	300	200	1967	90	237	413	748	1052	910	1560	150	1260	630	580	530	265	6×21
32/9	45	128	315	621	50	32	510	300	200	1932	90	237	413	641	1107	820	1620	150	1320	660	580	530	265	6×21
	55	128	420	726	50	32	510	300	200	2022	90	237	413	748	1107	910	1620	150	1320	660	580	530	265	6×21
	75	128	551	896	50	32	510	300	200	2097	90	237	443	841	1107	985	1720	150	1420	710	640	590	295	6×21
32/10	45	137	315	640	50	32	565	300	200	2077	90	237	413	641	1162	910	1680	150	1380	690	580	530	265	6×21
	55	137	420	745	50	32	565	300	200	2077	90	237	413	748	1162	910	1680	150	1380	690	580	530	265	6×21
	75	137	551	915	50	32	565	300	200	2152	90	237	443	841	1162	985	1780	150	1480	740	640	590	295	6×21
32/11	45	146	315	697	50	32	620	300	200	2132	90	237	443	641	1217	910	1820	150	1520	760	640	590	295	6×21
	55	146	420	802	50	32	620	300	200	2132	90	237	443	748	1217	910	1820	150	1520	760	640	590	295	6×21
	75	146	551	933	50	32	620	300	200	2207	90	237	443	841	1217	985	1820	150	1520	760	640	590	295	6×21
32/12	55	155	420	821	50	32	675	300	200	2187	90	237	443	748	1272	910	1880	150	1580	790	640	590	295	6×21
	75	155	551	952	50	32	675	300	200	2262	90	237	443	841	1272	985	1880	150	1580	790	640	590	295	6×21
	90	155	625	1002	50	32	675	300	200	2312	90	237	443	841	1272	1035	1880	150	1580	790	640	590	295	6×21
32/13	55	164	420	840	50	32	730	300	200	2242	90	237	443	748	1327	910	1940	150	1640	820	640	590	295	6×21
	75	164	551	971	50	32	730	300	200	2317	90	237	443	841	1327	985	1940	150	1640	820	640	590	295	6×21
	90	164	625	1021	50	32	730	300	200	2367	90	237	443	841	1327	1035	1940	150	1640	820	640	590	295	6×21

HPA 50

2.950 rpm - Grease lubrication

HPA model	DIMENSIONS (mm)																							
	kW	kg P.	kg M.	kg Tot.	Dn_1	Dn_2	a	f	h_2	L	g_1	g_2	h_1	h_3	l_1	l_2	m	m_1	m_2	m_3	n	n_1	n_2	s
50/1	5,5	62	43	169	100	50	90	410	225	982	90	67	338	480	567	410	1080	150	780	-	440	400	200	4×19
	7,5	62	73	199	100	50	90	410	225	1052	90	67	338	500	567	480	1080	150	780	-	440	400	200	4×19
	11	62	120	246	100	50	90	410	225	1187	90	67	338	593	567	615	1080	150	780	-	440	400	200	4×19
	15	62	132	258	100	50	90	410	225	1187	90	67	338	593	567	615	1080	150	780	-	440	400	200	4×19
	18,5	62	150	276	100	50	90	410	225	1282	90	67	338	590	567	710	1080	150	780	-	440	400	200	4×19
50/2	11	81	120	271	100	50	220	410	225	1317	90	67	338	593	697	615	1320	150	980	-	440	400	200	4×19
	15	81	132	283	100	50	220	410	225	1317	90	67	338	593	697	615	1320	150	980	-	440	400	200	4×19
	18,5	81	150	301	100	50	220	410	225	1412	90	67	338	590	697	710	1320	150	980	-	440	400	200	4×19
	22	81	205	356	100	50	220	410	225	1432	90	67	338	608	697	730	1320	150	980	-	440	400	200	4×19
	30	81	250	401	100	50	220	410	225	1473	90	67	338	641	697	771	1320	150	1020	-	480	440	220	4×19
	37	81	270	421	100	50	220	410	225	1473	90	67	338	641	697	771	1320	150	1020	-	480	440	220	4×19
50/3	22	100	205	389	100	50	282	410	225	1494	90	67	338	608	759	730	1380	150	1080	-	480	440	220	4×19
	30	100	250	434	100	50	282	410	225	1535	90	67	338	641	759	771	1380	150	1080	-	480	440	220	4×19
	37	100	270	454	100	50	282	410	225	1535	90	67	338	641	759	771	1380	150	1080	-	480	440	220	4×19
	45	100	315	499	100	50	282	410	225	1584	90	67	368	680	759	820	1400	150	1100	-	520	480	240	4×19
50/4	30	119	250	470	100	50	344	410	225	1597	90	67	368	671	821	771	1460	150	1160	-	520	480	240	4×19
	37	119	270	490	100	50	344	410	225	1597	90	67	368	671	821	771	1460	150	1160	-	520	480	240	4×19
	45	119	315	535	100	50	344	410	225	1646	90	67	368	680	821	820	1460	150	1160	-	520	480	240	4×19
	55	119	420	640	100	50	344	410	225	1646	90	67	368	680	821	820	1460	150	1160	-	520	480	240	4×19
	75	119	551	771	100	50	344	410	225	1736	90	67	428	783	821	910	1560	150	1260	630	580	540	270	6×21
	90	119	625	845	100	50	344	410	225	1811	90	67	448	846	821	985	1660	150	1360	680	640	600	300	6×21
50/5	37	138	270	525	100	50	406	410	225	1659	90	67	428	711	883	771	1620	150	1320	660	570	530	265	6×21
	45	138	315	570	100	50	406	410	225	1708	90	67	428	720	883	820	1620	150	1320	660	570	530	265	6×21
	55	138	420	675	100	50	406	410	225	1798	90	67	428	783	883	910	1620	150	1320	660	570	530	265	6×21
	75	138	551	806	100	50	406	410	225	1873	90	67	448	846	883	985	1720	150	1420	710	640	600	300	6×21
	90	138	625	880	100	50	406	410	225	1923	90	67	448	846	883	1035	1720	150	1420	710	640	600	300	6×21
50/6	45	157	315	600	100	50	468	410	225	1770	90	67	448	760	945	820	1780	150	1480	740	640	600	300	6×21
	55	157	420	705	100	50	468	410	225	1860	90	67	448	803	945	910	1780	150	1480	740	640	600	300	6×21
	75	157	551	836	100	50	468	410	225	1935	90	67	448	846	945	985	1780	150	1480	740	640	600	300	6×21
	90	157	625	910	100	50	468	410	225	1985	90	67	448	846	945	1035	1780	150	1480	740	640	600	300	6×21
	110	157	968	1253	100	50	468	410	225	2110	90	67	488	1018	945	1160	1920	150	1620	810	680	640	320	6×21
50/7	55	176	420	741	100	50	530	410	225	1922	90	67	448	803	1007	910	1840	150	1540	770	640	600	300	6×21
	75	176	551	872	100	50	530	410	225	1997	90	67	448	846	1007	985	1840	150	1540	770	640	600	300	6×21
	90	176	625	946	100	50	530	410	225	2047	90	67	448	846	1007	1035	1840	150	1540	770	640	600	300	6×21
	110	176	968	1289	100	50	530	410	225	2172	90	67	488	1018	1007	1160	1980	150	1680	840	680	640	320	6×21
50/8	75	195	551	909	100	50	592	410	225	2059	90	67	448	846	1069	985	1900	150	1600	800	640	600	300	6×21
	90	195	625	983	100	50	592	410	225	2109	90	67	448	846	1069	1035	1900	150	1600	800	640	600	300	6×21
	110	195	968	1326	100	50	592	410	225	2234	90	67	508	1038	1069	1160	2040	150	1740	870	700	660	330	6×21
	132	195	1100	1458	100	50	592	410	225	2264	90	67	508	1038	1069	1190	2040	150	1740	870	700	660	330	6×21
50/9	75	214	551	939	100	50	654	410	225	2121	90	67	448	846	1131	985	1960	150	1660	830	640	600	300	6×21
	90	214	625	1013	100	50	654	410	225	2171	90	67	448	846	1131	1035	1960	150	1660	830	640	600	300	6×21
	110	214	968	1356	100	50	654	410	225	2296	90	67	508	1038	1131	1160	2100	150	1800	900	700	660	330	6×21
	132	214	1100	1488	100	50	654	410	225	2326	90	67	508	1038	1131	1190	2100	150	1800	900	700	660	330	6×21
	160	214	1161	1549	100	50	654	410	225	2456	90	67	508	1038	1131	1320	2100	150	1800	900	700	660	330	6×21
50/10	90	233	625	1048	100	50	716	410	225	2233	90	67	508	906	1193	1035	2160	150	1860	930	700	660	330	6×21
	110	233	968	1391	100	50	716	410	225	2358	90	67	508	1038	1193	1160	2160	150	1860	930	700	660	330	6×21
	132	233	1100	1523	100	50	716	410	225	2388	90	67	508	1038	1193	1190	2160	150	1860	930	700	660	330	6×21
	160	233	1161	1584	100	50	716	410	225	2518	90	67	508	1038	1193	1320	2160	150	1860	930	700	660	330	6×21
50/11	90	252	625	1088	100	50	778	410	225	2295	90	67	508	906	1255	1035	2240	150	1940	970	700	660	330	6×21
	110	252	968	1431	100	50	778	410	225	2420	90	67	508	1038	1255	1160	2240	150	1940	970	700	660	330	6×21
	132	252	1100	1563	100	50	778	410	225	2450	90	67	508	1038	1255	1190	2240	150	1940	970	700	660	330	6×21
	160	252	1161	1624	100	50	778	410	225	2580	90	67	508	1038	1255	1320	2240	150	1940	970	700	660	330	6×21
	200	252	1221	1684	100	50	778	410	225	2580	90	67	508	1038	1255	1320	2240	150	1940	970	700	660	330	6×21

HPA 80

2.950 rpm - Grease lubrication

HPA model	DIMENSIONS (mm)																							
	kW	kg P.	kg M.	kg Tot.	Dn_1	Dn_2	a	f	h_2	L	g_1	g_2	h_1	h_3	l_1	l_2	m	m_1	m_2	m_3	n	n_1	n_2	s
80/1	11	87	120	286	125	80	120	460	250	1265	80	65	553	618	645	615	1280	150	980	-	480	440	220	4×19
	15	87	132	298	125	80	120	460	250	1265	80	65	553	618	645	615	1280	150	980	-	480	440	220	4×19
	18,5	87	150	316	125	80	120	460	250	1360	80	65	553	615	645	710	1280	150	980	-	480	440	220	4×19
	22	87	205	371	125	80	120	460	250	1265	80	65	553	633	645	615	1280	150	980	-	480	440	220	4×19
	30	87	250	416	125	80	120	460	250	1421	80	65	553	666	645	771	1280	150	980	-	480	440	220	4×19
80/2	22	116	205	416	125	80	195	460	250	1340	80	65	393	663	720	615	1480	150	1180	-	580	540	270	4×19
	30	116	250	461	125	80	195	460	250	1496	80	65	393	696	720	771	1480	150	1180	-	580	540	270	4×19
	37	116	270	481	125	80	195	460	250	1496	80	65	393	696	720	771	1480	150	1180	-	580	540	270	4×19
	45	116	315	526	125	80	195	460	250	1545	80	65	393	705	720	820	1480	150	1180	-	580	540	270	4×19
	55	116	420	631	125	80	195	460	250	1635	80	65	393	748	720	910	1480	150	1180	-	580	540	270	4×19
	75	116	551	762	125	80	195	460	250	1710	80	65	453	851	720	985	1580	150	1280	640	640	600	300	6×21
80/3	45	145	315	573	125	80	270	460	250	1620	80	65	453	765	795	820	1660	150	1360	680	640	600	300	6×21
	55	145	420	678	125	80	270	460	250	1710	80	65	453	765	795	910	1660	150	1360	680	640	600	300	6×21
	75	145	551	809	125	80	270	460	250	1785	80	65	453	851	795	985	1660	150	1360	680	640	600	300	6×21
	90	145	625	883	125	80	270	460	250	1835	80	65	453	851	795	1035	1660	150	1360	680	640	600	300	6×21
80/4	75	174	551	854	125	80	345	460	250	1860	80	65	493	848	870	985	1860	150	1560	780	700	660	330	6×21
	90	174	625	928	125	80	345	460	250	1910	80	65	493	891	870	1035	1860	150	1560	780	700	660	330	6×21
	110	174	968	1271	125	80	345	460	250	2035	80	65	493	1023	870	1160	1860	150	1560	780	700	660	330	6×21
	132	174	1100	1403	125	80	345	460	250	2065	80	65	493	1023	870	1190	1860	150	1560	780	700	660	330	6×21
80/5	90	203	625	976	125	80	420	460	250	1985	80	65	493	891	945	1035	1940	150	1640	820	700	660	330	6×21
	110	203	968	1319	125	80	420	460	250	2110	80	65	493	1023	945	1160	1940	150	1640	820	700	660	330	6×21
	132	203	1100	1451	125	80	420	460	250	2140	80	65	493	1023	945	1190	1940	150	1640	820	700	660	330	6×21
	160	203	1161	1512	125	80	420	460	250	2270	80	65	493	1023	945	1320	1940	150	1640	820	700	660	330	6×21
80/6	110	232	968	1370	125	80	495	460	250	2185	80	65	513	1023	1020	1160	2020	150	1720	860	720	680	340	6×21
	132	232	1100	1502	125	80	495	460	250	2215	80	65	513	1023	1020	1190	2020	150	1720	860	720	680	340	6×21
	160	232	1161	1563	125	80	495	460	250	2345	80	65	513	1043	1020	1320	2020	150	1720	860	720	680	340	6×21
	200	232	1221	1623	125	80	495	460	250	2345	80	65	513	1043	1020	1320	2020	150	1720	860	720	680	340	6×21
80/7	132	261	1100	1557	125	80	570	460	250	2290	80	65	513	1023	1095	1190	2100	150	1800	900	720	680	340	6×21
	160	261	1161	1618	125	80	570	460	250	2420	80	65	513	1043	1095	1320	2100	150	1800	900	720	680	340	6×21
	200	261	1221	1678	125	80	570	460	250	2420	80	65	513	1043	1095	1320	2100	150	1800	900	720	680	340	6×21
	250	261	2090	2547	125	80	570	460	250	2600	80	65	553	1208	1095	1500	2260	150	1960	980	820	780	390	6×21
80/8	160	290	1161	1676	125	80	645	460	250	2495	80	65	513	1043	1170	1320	2160	150	1860	940	700	660	330	6×21
	200	290	1221	1736	125	80	645	460	250	2495	80	65	513	1043	1170	1320	2160	150	1860	940	700	660	330	6×21
	250	290	2090	2605	125	80	645	460	250	2675	80	65	553	1208	1170	1500	2340	150	2040	1020	820	780	390	6×21
80/9	200	319	1221	1792	125	80	720	460	250	2570	80	65	553	1043	1245	1320	2420	150	2120	1060	820	780	390	6×21
	250	319	2090	2661	125	80	720	460	250	2750	80	65	553	1208	1245	1500	2420	150	2120	1060	820	780	390	6×21
	315	319	2530	3101	125	80	720	460	250	2750	80	65	553	1208	1245	1500	2420	150	2120	1060	820	780	390	6×21

HPA 100

2.950 rpm - Grease lubrication

HPA model	DIMENSIONS (mm)																							
	kW	kg P.	kg M.	kg Tot.	Dn_1	Dn_2	a	f	h_2	L	g_1	g_2	h_1	h_3	l_1	l_2	m	m_1	m_2	m_3	n	n_1	n_2	s
100/1	22	174	205	490	150	100	145	480	315	1320	70	75	443	663	700	615	1560	150	1260	630	640	600	300	6×21
	30	174	250	535	150	100	145	480	315	1476	70	75	443	696	700	771	1560	150	1260	630	640	600	300	6×21
	37	174	270	555	150	100	145	480	315	1476	70	75	443	696	700	771	1560	150	1260	630	640	600	300	6×21
	45	174	315	600	150	100	145	480	315	1525	70	75	443	705	700	820	1560	150	1260	630	640	600	300	6×21
	55	174	420	705	150	100	145	480	315	1615	70	75	443	748	700	910	1560	150	1260	630	640	600	300	6×21
	75	174	551	836	150	100	145	480	315	1690	70	75	443	841	700	985	1560	150	1260	630	640	600	300	6×21
100/2	55	219	420	787	150	100	235	480	315	1615	70	75	503	815	790	820	1780	150	1480	740	740	700	350	6×21
	75	219	551	918	150	100	235	480	315	1705	70	75	503	858	790	910	1780	150	1480	740	740	700	350	6×21
	90	219	625	992	150	100	235	480	315	1780	70	75	503	901	790	985	1780	150	1480	740	740	700	350	6×21
	110	219	968	1335	150	100	235	480	315	1955	70	75	503	1033	790	1160	1780	150	1480	740	740	700	350	6×21
	132	219	1100	1467	150	100	235	480	315	1985	70	75	503	1033	790	1190	1780	150	1480	740	740	700	350	6×21
100/3	90	264	625	1066	150	100	325	480	315	1870	70	75	503	901	880	985	1880	150	1580	790	740	700	350	6×21
	110	264	968	1409	150	100	325	480	315	2045	70	75	503	1033	880	1160	1880	150	1580	790	740	700	350	6×21
	132	264	1100	1541	150	100	325	480	315	2075	70	75	503	1033	880	1190	1880	150	1580	790	740	700	350	6×21
	160	264	1161	1602	150	100	325	480	315	2205	70	75	503	1033	880	1320	1880	150	1580	790	740	700	350	6×21
	200	264	1221	1662	150	100	325	480	315	2205	70	75	503	1033	880	1320	1880	150	1580	790	740	700	350	6×21
100/4	160	309	1161	1673	150	100	415	480	315	2295	70	75	503	1033	970	1320	1960	150	1660	830	740	700	350	6×21
	200	309	1221	1674	150	100	415	480	315	2295	70	75	503	1033	970	1320	1960	150	1660	830	740	700	350	6×21
	250	309	2090	2513	150	100	415	480	315	2475	70	75	563	1218	970	1500	2140	150	1840	920	820	780	390	6×21
100/5	160	354	1161	3184	150	100	505	480	315	2385	70	75	563	1093	1060	1320	2220	150	1920	960	820	780	390	6×21
	200	354	1221	3184	150	100	505	480	315	2385	70	75	563	1093	1060	1320	2220	150	1920	960	820	780	390	6×21
	250	354	2090	2665	150	100	505	480	315	2565	70	75	563	1218	1060	1500	2220	150	1920	960	820	780	390	6×21
	315	354	2530	2965	150	100	505	480	315	2565	70	75	563	1218	1060	1500	2220	150	1920	960	820	780	390	6×21
100/6	250	399	2090	3184	150	100	595	480	315	2655	70	75	563	1218	1150	1500	2320	150	2020	1010	820	780	390	6×21
	315	399	2530	3017	150	100	595	480	315	2655	70	75	563	1218	1150	1500	2320	150	2020	1010	820	780	390	6×21
	355	399	2000	2467	150	100	595	480	315	2945	70	75	563	1167	1150	1790	2320	150	2020	1010	820	780	390	6×21
	400	399	2300	2790	150	100	595	480	315	2875	70	75	563	1117	940	1930	2320	150	2020	1010	820	780	390	6×21

HPA 125

2.950 rpm - Grease lubrication

HPA model	DIMENSIONS (mm)																							
	kW	kg P.	kg M.	kg Tot.	Dn_1	Dn_2	a	f	h_2	L	g_1	g_2	h_1	h_3	l_1	l_2	m	m_1	m_2	m_3	n	n_1	n_2	s
125/1	90	283	625	1096	200	125	155	590	350	1820	50	85	482	880	830	985	1820	150	1520	760	740	700	350	6×21
	110	283	968	1439	200	125	155	590	350	1995	50	85	482	1012	830	1160	1820	150	1520	760	740	700	350	6×21
	132	283	1100	1571	200	125	155	590	350	2025	50	85	482	1012	830	1190	1820	150	1520	760	740	700	350	6×21
	160	283	1161	1632	200	125	155	590	350	2155	50	85	482	1012	830	1320	1820	150	1520	760	740	700	350	6×21
	200	283	1221	1692	200	125	155	590	350	2155	50	85	482	1012	830	1320	1820	150	1520	760	740	700	350	6×21
125/2	160	364	1161	1739	200	125	265	590	350	2265	50	85	542	1072	940	1320	2120	150	1820	910	820	780	390	6×21
	200	364	1221	1799	200	125	265	590	350	2265	50	85	542	1072	940	1320	2120	150	1820	910	820	780	390	6×21
	250	364	2090	2668	200	125	265	590	350	2445	50	85	542	1197	940	1500	2120	150	1820	910	820	780	390	6×21
	315	364	2530	3108	200	125	265	590	350	2445	50	85	542	1197	940	1500	2120	150	1820	910	820	780	390	6×21
	355	364	2000	2578	200	125	265	590	350	2735	50	85	542	1087	940	1790	2120	150	1820	910	820	780	390	6×21
	400	364	2300	2878	200	125	265	590	350	2875	50	85	542	1117	940	1930	2120	150	1820	910	820	780	390	6×21
125/3	315	445	2530	3217	200	125	375	590	350	2555	50	85	542	1197	1050	1500	2220	150	1920	960	820	780	390	6×21
	355	445	2000	2687	200	125	375	590	350	2845	50	85	542	1087	1050	1790	2220	150	1920	960	820	780	390	6×21
	400	445	2300	2987	200	125	375	590	350	2985	50	85	542	1117	1050	1930	2220	150	1920	960	820	780	390	6×21
	450	445	2400	3087	200	125	375	590	350	2985	50	85	542	1117	1050	1930	2220	150	1920	960	820	780	390	6×21
	510	445	2550	3237	200	125	375	590	350	2985	50	85	542	1117	1050	1930	2220	150	1920	960	820	780	390	6×21
	560	445	3150	3837	200	125	375	590	350	3150	50	85	542	1152	1050	2095	2220	150	1920	960	820	780	390	6×21
	650	445	3300	3987	200	125	375	590	350	3150	50	85	612	1222	1050	2095	2640	150	2340	780	980	940	470	8×21
125/ 4	450	526	2400	3198	200	125	485	590	350	3095	50	85	612	1117	1160	1930	2760	150	2460	820	980	940	470	8×21
	510	526	2550	3348	200	125	485	590	350	3095	50	85	612	1117	1160	1930	2760	150	2460	820	980	940	470	8×21
	560	526	3150	3948	200	125	485	590	350	3260	50	85	612	1152	1160	2095	2760	150	2460	820	980	940	470	8×21
	650	526	3300	4098	200	125	485	590	350	3260	50	85	612	1222	1160	2095	2760	150	2460	820	980	940	470	8×21
	750	526	3550	4348	200	125	485	590	350	3260	50	85	612	1222	1160	2095	2760	150	2460	820	980	940	470	8×21
	820	526	4600	5398	200	125	485	590	350	3485	50	85	612	1262	1160	2320	2760	150	2460	820	980	940	470	8×21

HPA 150

2.950 rpm - Grease lubrication

HPA model	DIMENSIONS (mm)																							
	kW	kg P.	kg M.	kg Tot.	Dn_1	Dn_2	a	f	h_2	L	g_1	g_2	h_1	h_3	l_1	l_2	m	m_1	m_2	m_3	n	n_1	n_2	s
150/1	200	509	1221	1957	250	150	175	590	420	2200	40	110	553	1083	875	1320	2040	150	1740	870	840	800	400	6×21
	250	509	2090	2826	250	150	175	590	420	2380	40	110	553	1208	875	1500	2040	150	1740	870	840	800	400	6×21
	315	509	2530	3266	250	150	175	590	420	2380	40	110	553	1208	875	1500	2040	150	1740	870	840	800	400	6×21
	355	509	2000	2795	250	150	175	590	420	2670	40	110	553	1098	875	1790	2040	150	1740	870	840	800	400	6×21
	400	509	2300	3095	250	150	175	590	420	2810	40	110	553	1128	875	1930	2040	150	1740	870	840	800	400	6×21
	450	509	2400	3195	250	150	175	590	420	2810	40	110	553	1128	875	1930	2040	150	1740	870	840	800	400	6×21
	510	509	2550	3345	250	150	175	590	420	2810	40	110	553	1128	875	1930	2040	150	1740	870	840	800	400	6×21
150/2	400	645	2300	3290	250	150	310	590	420	2805	40	110	682	1257	1010	1790	2940	150	2640	880	1080	1040	520	8×21
	450	645	2400	3390	250	150	310	590	420	2945	40	110	682	1257	1010	1930	2940	150	2640	880	1080	1040	520	8×21
	510	645	2550	3540	250	150	310	590	420	2945	40	110	682	1257	1010	1930	2940	150	2640	880	1080	1040	520	8×21
	560	645	3150	4140	250	150	310	590	420	3110	40	110	682	1292	1010	2095	2940	150	2640	880	1080	1040	520	8×21
	650	645	3300	4290	250	150	310	590	420	3110	40	110	682	1292	1010	2095	2940	150	2640	880	1080	1040	520	8×21
	750	645	3550	4589	250	150	310	590	420	3110	40	110	682	1292	1010	2095	2940	150	2640	880	1080	1040	520	8×21
	820	645	4600	5639	250	150	310	590	420	3335	40	110	682	1332	1010	2320	2940	150	2640	880	1080	1040	520	8×21
	940	645	4900	6008	250	150	310	590	420	3335	40	110	682	1332	1010	2320	2940	150	2640	880	1080	1040	520	8×21
	1030	645	5200	6308	250	150	310	590	420	3335	40	110	682	1332	1010	2320	2940	150	2640	880	1080	1040	520	8×21
	1200	645	6100	7208	250	150	310	590	420	3690	40	110	752	1432	1010	2675	3450	150	3150	1020	1220	1180	590	8×21

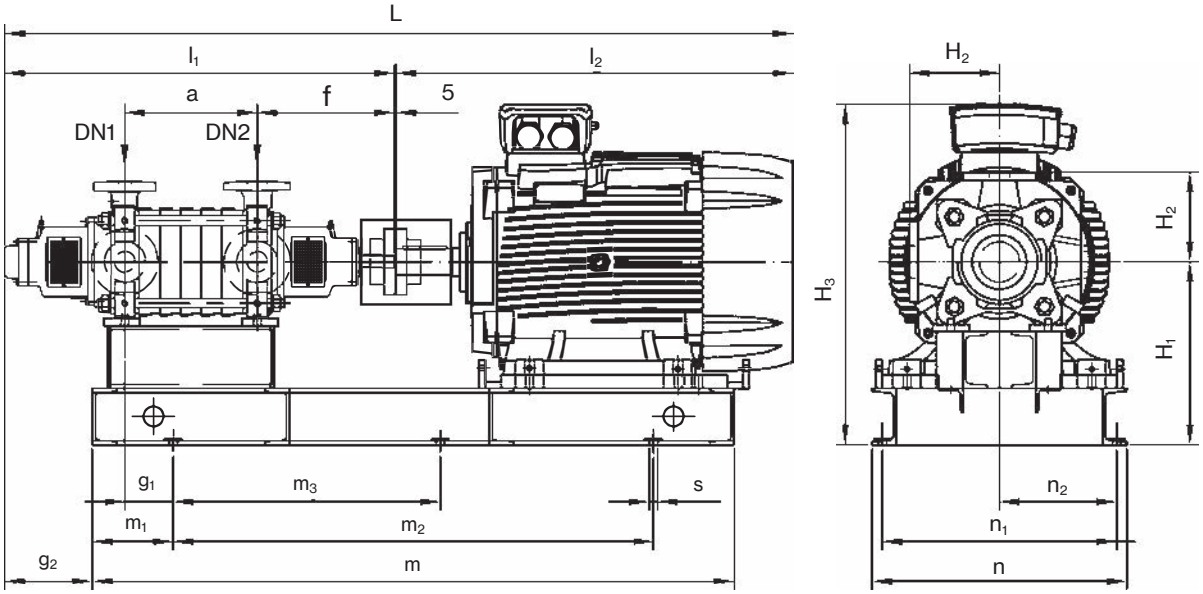

HP 25

1.450 rpm - Grease lubrication

HP model	DIMENSIONS (mm)																							
	kW	kg P.	kg M.	kg Tot.	Dn_1	Dn_2	a	f	h_2	L	g_1	g_2	h_1	h_3	l_1	l_2	m	m_1	m_2	m_3	n	n_1	n_2	s
25/1	0,75	39	12	91	40	25	55	239,5	165	774,5	100	142	263	393	486,5	283	600	150	300	-	310	275	137,5	4×17
25/2	0,75	48	12	101	40	25	100	239,5	165	819,5	100	142	263	393	531,5	283	640	150	340	-	310	275	137,5	4×17
25/3	0,75	57	12	111	40	25	145	239,5	165	864,5	100	142	263	393	576,5	283	680	150	380	-	310	275	137,5	4×17
25/4	1,1	66	25	122,1	40	25	190	239,5	165	909,5	100	142	263	413	621,5	283	720	150	420	-	310	275	137,5	4×17
25/5	1,1	75	25	137,1	40	25	235	239,5	165	954,5	100	142	283	413	666,5	283	780	150	480	-	320	280	140	4×19
	1,5	75	30	141	40	25	235	239,5	165	1009,5	100	142	283	428	666,5	338	800	150	500	-	320	280	140	4×19
25/6	1,5	84	30	152	40	25	280	239,5	165	1054,5	100	142	283	428	711,5	338	840	150	540	-	320	280	140	4×19
25/7	1,5	93	30	163	40	25	325	239,5	165	1099,5	100	142	283	428	756,5	338	900	150	600	-	320	280	140	4×19
	2,2	111	36	171	40	25	325	239,5	165	1134,5	100	142	283	440	756,5	373	920	150	620	-	320	280	140	4×19
25/8	2,2	102	36	182	40	25	370	239,5	165	1179,5	100	142	283	440	801,5	373	980	150	680	-	320	280	140	4×19
25/9	2,2	111	36	201	40	25	415	239,5	165	1224,5	100	142	303	460	846,5	373	1020	150	720	-	330	290	145	4×19
	3	111	40	203	40	25	415	239,5	165	1224,5	100	142	303	460	846,5	373	1020	150	720	-	330	290	145	4×19
25/10	2,2	120	36	212	40	25	460	239,5	165	1269,5	100	142	303	460	891,5	373	1060	150	760	-	330	290	145	4×19
	3	120	40	214	40	25	460	239,5	165	1269,5	100	142	303	460	891,5	373	1060	150	760	-	330	290	145	4×19
25/11	3	129	40	225	40	25	505	239,5	165	1314,5	100	142	303	460	936,5	373	1100	150	800	-	330	290	145	4×19
25/12	3	138	40	236	40	25	550	239,5	165	1359,5	100	142	303	460	981,5	373	1140	150	840	-	330	290	145	4×19
25/13	3	147	40	247	40	25	595	239,5	165	1404,5	100	142	303	460	1026,5	373	1200	150	900	-	330	290	145	4×19
	4	147	46	250	40	25	595	239,5	165	1421,5	100	142	303	480	1026,5	390	1200	150	900	-	360	320	160	4×19
25/14	3	156	40	258	40	25	640	239,5	165	1449,5	100	142	303	460	1071,5	373	1240	150	940	-	330	290	145	4×19
	4	156	46	261	40	25	640	239,5	165	1466,5	100	142	303	480	1071,5	390	1240	150	940	-	360	320	160	4×19
25/15	4	165	46	272	40	25	685	239,5	165	1511,5	100	142	303	480	1116,5	390	1300	150	1000	-	360	320	160	4×19
25/16	4	174	46	283	40	25	730	239,5	165	1556,5	100	142	303	480	1161,5	390	1340	150	1040	-	360	320	160	4×19
25/17	4	183	46	294	40	25	775	239,5	165	1601,5	100	142	303	480	1206,5	390	1380	150	1080	-	360	320	160	4×19
	5,5	183	70	311	40	25	775	239,5	165	1671,5	100	142	303	500	1206,5	460	1460	150	1160	-	360	320	160	4×19
25/18	4	192	46	305	40	25	820	239,5	165	1646,5	100	142	303	480	1251,5	390	1420	150	1120	-	360	320	160	4×19
	5,5	192	70	322	40	25	820	239,5	165	1716,5	100	142	303	520	1251,5	460	1500	150	1200	-	360	320	160	4×19
25/19	4	201	46	316	40	25	865	239,5	165	1691,5	100	142	303	480	1296,5	390	1480	150	1180	-	360	320	160	4×19
	5,5	201	70	346	40	25	865	239,5	165	1761,5	100	142	323	520	1296,5	460	1560	150	1260	630	360	320	160	6×21
25/20	5,5	210	70	357	40	25	910	239,5	165	1806,5	100	142	323	520	1341,5	460	1600	150	1300	650	360	320	160	6×21
25/21	5,5	219	70	368	40	25	955	239,5	165	1851,5	100	142	323	520	1386,5	460	1640	150	1340	670	360	320	160	6×21
25/22	5,5	228	70	379	40	25	1000	239,5	165	1896,5	100	142	323	520	1431,5	460	1680	150	1380	690	360	320	160	6×21
25/23	5,5	237	70	390	40	25	1045	239,5	165	1941,5	100	142	323	520	1476,5	460	1740	150	1440	720	360	320	160	6×21
	7,5	237	57	392	40	25	1045	239,5	165	1977,5	100	142	323	520	1476,5	496	1740	150	1440	720	360	320	160	6×21
25/24	5,5	246	70	401	40	25	1090	239,5	165	1986,5	100	142	323	520	1521,5	460	1780	150	1480	740	360	320	160	6×21
	7,5	246	57	403	40	25	1090	239,5	165	2022,5	100	142	323	520	1521,5	496	1780	150	1480	740	360	320	160	6×21
25/25	5,5	255	70	412	40	25	1135	239,5	165	2031,5	100	142	323	520	1566,5	460	1820	150	1520	760	360	320	160	6×21
	7,5	255	57	414	40	25	1135	239,5	165	2067,5	100	142	323	520	1566,5	496	1820	150	1520	760	360	320	160	6×21

HP 32

1.450 rpm - Grease lubrication

HP model	DIMENSIONS (mm)																							
	kW	kg P.	kg M.	kg Tot.	Dn_1	Dn_2	a	f	h_2	L	g_1	g_2	h_1	h_3	l_1	l_2	m	m_1	m_2	m_3	n	n_1	n_2	s
32/1	0,75	72	12	125	50	32	70	300	200	955	90	237	283	433	667	283	680	150	380	-	310	275	137,5	4×17
	1,1	72	25	135	50	32	70	300	200	1010	90	237	303	448	667	338	720	150	420	-	320	280	140	4×19
32/2	1,1	87	25	151	50	32	125	300	200	1065	90	237	303	448	722	338	760	150	460	-	320	280	140	4×19
	1,5	87	30	153	50	32	125	300	200	1065	90	237	303	448	722	338	760	150	460	-	320	280	140	4×19
	2,2	87	36	155	50	32	125	300	200	1100	90	237	303	460	722	373	800	150	500	-	320	280	140	4×19
32/3	1,5	102	30	171	50	32	180	300	200	1140	90	237	303	448	777	358	860	150	560	-	320	280	140	4×19
	2,2	102	36	177	50	32	180	300	200	1175	90	237	303	460	777	393	860	150	560	-	320	280	140	4×19
	3	102	40	181	50	32	180	300	200	1175	90	237	303	460	777	393	860	150	560	-	320	280	140	4×19
32/4	2,2	117	36	191	50	32	235	300	200	1230	90	237	303	460	832	393	900	150	600	-	320	280	140	4×19
	3	117	40	195	50	32	235	300	200	1230	90	237	303	460	832	393	900	150	600	-	320	280	140	4×19
	4	117	46	201	50	32	235	300	200	1247	90	237	303	480	832	410	920	150	620	-	320	280	140	4×19
32/5	2,2	132	36	208	50	32	290	300	200	1285	90	237	303	460	887	393	960	150	660	-	320	280	140	4×19
	3	132	40	212	50	32	290	300	200	1285	90	237	303	460	887	393	960	150	660	-	320	280	140	4×19
	4	132	46	218	50	32	290	300	200	1302	90	237	303	480	887	410	980	150	680	-	320	280	140	4×19
32/6	3	147	40	232	50	32	345	300	200	1340	90	237	303	460	942	393	1020	150	720	-	320	280	140	4×19
	4	147	46	238	50	32	345	300	200	1357	90	237	303	480	942	410	1020	150	720	-	320	280	140	4×19
	5,5	147	70	262	50	32	345	300	200	1427	90	237	323	520	942	480	1100	150	800	-	320	280	140	4×19
32/7	4	162	46	256	50	32	400	300	200	1412	90	237	323	480	997	410	1160	150	860	-	320	280	140	4×19
	5,5	162	70	280	50	32	400	300	200	1482	90	237	323	520	997	480	1160	150	860	-	320	280	140	4×19
32/8	4	177	46	288	50	32	455	300	200	1467	90	237	323	480	1052	410	1220	150	920	-	320	280	140	4×19
	5,5	177	70	312	50	32	455	300	200	1537	90	237	323	520	1052	480	1220	150	920	-	320	280	140	4×19
	7,5	177	57	299	50	32	455	300	200	1573	90	237	323	520	1052	516	1220	150	920	-	320	280	140	4×19
32/9	5,5	192	70	303	50	32	510	300	200	1592	90	237	323	520	1107	480	1260	150	960	-	320	280	140	4×19
	7,5	192	57	315	50	32	510	300	200	1628	90	237	323	520	1107	516	1260	150	960	-	320	280	140	4×19
32/10	5,5	207	70	331	50	32	565	300	200	1647	90	237	323	520	1162	480	1320	150	1020	-	320	280	140	4×19
	7,5	207	57	343	50	32	565	300	200	1683	90	237	323	520	1162	516	1320	150	1020	-	320	280	140	4×19
	11	207	125	411	50	32	565	300	200	1782	90	237	323	578	1162	615	1440	150	1140	-	360	320	160	4×19
32/11	5,5	222	70	348	50	32	620	300	200	1702	90	237	323	520	1217	480	1380	150	1080	-	320	280	140	4×19
	7,5	222	57	360	50	32	620	300	200	1738	90	237	323	520	1217	516	1380	150	1080	-	320	280	140	4×19
	11	222	125	428	50	32	620	300	200	1837	90	237	323	578	1217	615	1500	150	1200	-	360	310	155	4×19
32/12	5,5	237	70	376	50	32	675	300	200	1757	90	237	323	520	1272	480	1440	150	1140	-	320	280	140	4×19
	7,5	237	57	388	50	32	675	300	200	1793	90	237	323	520	1272	516	1440	150	1140	-	320	280	140	4×19
	11	237	125	456	50	32	675	300	200	1892	90	237	343	578	1272	615	1560	150	1260	630	360	310	155	6×21
32/13	7,5	252	57	407	50	32	730	300	200	1848	90	237	343	520	1327	516	1620	150	1320	660	360	310	155	6×21
	11	252	125	475	50	32	730	300	200	1947	90	237	343	578	1327	615	1620	150	1320	660	360	310	155	6×21
32/14	7,5	267	57	424	50	32	785	300	200	1903	90	237	343	520	1382	516	1660	150	1360	680	360	310	155	6×21
	11	267	125	492	50	32	785	300	200	2002	90	237	343	578	1382	615	1660	150	1360	680	360	310	155	6×21
32/15	7,5	282	57	431	50	32	840	300	200	1958	90	237	343	520	1437	516	1720	150	1420	710	360	310	155	6×21
	11	282	125	499	50	32	840	300	200	2057	90	237	343	578	1437	615	1720	150	1420	710	360	310	155	6×21
	15	282	150	524	50	32	840	300	200	2152	90	237	343	595	1437	710	1720	150	1420	710	360	310	155	6×21
32/16	11	297	125	527	50	32	895	300	200	2112	90	237	343	578	1492	615	1780	150	1480	740	360	310	155	6×21
	15	297	150	541	50	32	895	300	200	2207	90	237	343	595	1492	710	1780	150	1480	740	360	310	155	6×21
32/17	11	312	125	545	50	32	950	300	200	2167	90	237	343	578	1547	615	1840	150	1540	770	360	310	155	6×21
	15	312	150	559	50	32	950	300	200	2262	90	237	343	595	1547	710	1840	150	1540	770	360	310	155	6×21
32/18	11	327	125	562	50	32	1005	300	200	2222	90	237	343	578	1602	615	1880	150	1580	790	360	310	155	6×21
	15	327	150	576	50	32	1005	300	200	2317	90	237	343	595	1602	710	1880	150	1580	790	360	310	155	6×21
32/19	11	342	125	579	50	32	1060	300	200	2277	90	237	343	578	1657	615	1940	150	1640	820	360	310	155	6×21
	15	342	150	593	50	32	1060	300	200	2372	90	237	343	595	1657	710	1940	150	1640	820	360	310	155	6×21
32/20	11	357	125	618	50	32	1115	300	200	2332	90	237	343	578	1712	615	2000	150	1700	850	360	310	155	6×21
	15	357	150	632	50	32	1115	300	200	2427	90	237	343	595	1712	710	2000	150	1700	850	360	310	155	6×21
	18,5	357	171	671	50	32	1115	300	200	2447	90	237	363	633	1712	730	2080	150	1780	890	450	400	200	6×21
32/21	11	372	125	636	50	32	1170	300	200	2387	90	237	363	578	1767	615	2060	150	1760	880	360	310	155	6×21
	15	372	150	650	50	32	1170	300	200	2482	90	237	363	595	1767	710	2060	150	1760	880	360	310	155	6×21
	18,5	372	171	689	50	32	1170	300	200	2502	90	237	363	633	1767	730	2140	150	1840	920	450	400	200	6×21
32/22	15	387	150	675	50	32	1225	300	200	2537	90	237	363	595	1822	710	2100	150	1800	900	360	310	155	6×21
	18,5	387	171	707	50	32	1225	300	200	2557	90	237	363	633	1822	730	2180	150	1880	940	450	400	200	6×21
32/23	15	402	150	693	50	32	1280	300	200	2592	90	237	363	595	1877	710	2160	150	1860	930	360	310	155	6×21
	18,5	402	171	725	50	32	1280	300	200	2612	90	237	363	633	1877	730	2240	150	1940	970	450	400	200	6×21
32/24	15	417	150	711	50	32	1335	300	200	2647	90	237	363	595	1932	710	2220	150	1920	960	360	310	155	6×21
	18,5	417	171	743	50	32	1335	300	200	2667	90	237	363	633	1932	730	2300	150	2000	1000	450	400	200	6×21
	22	417	190	761	50	32	1335	300	200	2717	90	237	363	633	1932	780	2300	150	2000	1000	450	400	200	6×21
32/25	15	432	150	729	50	32	1390	300	200	2702	90	237	363	595	1987	710	2280	150	1980	990	360	310	155	6×21
	18,5	432	171	761	50	32	1390	300	200	2722	90	237	363	633	1987	730	2360	150	2060	1030	450	400	200	6×21
	22	432	190	779	50	32	1390	300	200	2772	90	237	363	633	1987	780	2360	150	2060	1030	450	400	200	6×21

HP model	DIMENSIONS (mm)																							
	kW	kg P.	kg M.	kg Tot.	Dn_1	Dn_2	a	f	h_2	L	g_1	g_2	h_1	h_3	l_1	l_2	m	m_1	m_2	m_3	n	n_1	n_2	s
50/1	1,1	99	25	166	80	50	90	340	225	1088	90	263	318	463	753	330	760	150	460	-	360	320	160	4×19
	1,5	99	30	171	80	50	90	340	225	1116	90	263	318	463	753	358	760	150	460	-	360	320	160	4×19
	2,2	99	36	177	80	50	90	340	225	1151	90	263	318	475	753	393	800	150	500	-	360	320	160	4×19
50/2	2,2	118	36	190	80	50	152	340	225	1213	90	263	318	475	815	393	860	150	560	-	360	320	160	4×19
	3	118	40	194	80	50	152	340	225	1213	90	263	318	475	815	393	860	150	560	-	360	320	160	4×19
	4	118	46	200	80	50	152	340	225	1230	90	263	318	495	815	410	880	150	580	-	360	320	160	4×19
50/3	3	137	40	212	80	50	214	340	225	1275	90	263	318	475	877	393	940	150	640	-	360	320	160	4×19
	4	137	46	218	80	50	214	340	225	1292	90	263	318	495	877	410	940	150	640	-	360	320	160	4×19
	5,5	137	70	242	80	50	214	340	225	1362	90	263	318	515	877	480	1000	150	700	-	380	340	170	4×19
50/4	4	156	46	267	80	50	276	340	225	1354	90	263	338	515	939	410	1080	150	780	-	380	340	170	4×19
	5,5	156	70	291	80	50	276	340	225	1424	90	263	338	535	939	480	1080	150	780	-	380	340	170	4×19
	7,5	156	57	278	80	50	276	340	225	1460	90	263	338	535	939	516	1080	150	780	-	380	340	170	4×19
50/5	5,5	175	70	322	80	50	338	340	225	1486	90	263	338	535	1001	480	1140	150	840	-	380	340	170	4×19
	7,5	175	57	309	80	50	338	340	225	1522	90	263	338	535	1001	516	1140	150	840	-	380	340	170	4×19
	11	175	125	377	80	50	338	340	225	1621	90	263	338	593	1001	615	1260	150	960	-	380	340	170	4×19
50/6	5,5	194	70	344	80	50	400	340	225	1548	90	263	338	535	1063	480	1200	150	900	-	380	340	170	4×19
	7,5	194	57	331	80	50	400	340	225	1584	90	263	338	535	1063	516	1200	150	900	-	380	340	170	4×19
	11	194	125	399	80	50	400	340	225	1683	90	263	338	593	1063	615	1320	150	1020	-	380	340	170	4×19
50/7	7,5	213	57	341	80	50	462	340	225	1646	90	263	338	535	1125	516	1380	150	1080	-	380	340	170	4×19
	11	213	125	409	80	50	462	340	225	1745	90	263	338	593	1125	615	1380	150	1080	-	380	340	170	4×19
	15	213	150	434	80	50	462	340	225	1840	90	263	338	590	1125	710	1380	150	1080	-	380	340	170	4×19
50/8	7,5	232	57	363	80	50	524	340	225	1708	90	263	338	535	1187	516	1440	150	1140	-	380	340	170	4×19
	11	232	125	431	80	50	524	340	225	1807	90	263	338	593	1187	615	1440	150	1140	-	380	340	170	4×19
	15	232	150	456	80	50	524	340	225	1902	90	263	338	590	1187	710	1440	150	1140	-	380	340	170	4×19
50/9	11	251	125	490	80	50	586	340	225	1869	90	263	338	593	1249	615	1500	150	1200	-	380	340	170	4×19
	15	251	150	515	80	50	586	340	225	1964	90	263	338	590	1249	710	1500	150	1200	-	380	340	170	4×19
	18,5	251	171	536	80	50	586	340	225	1984	90	263	358	628	1249	730	1580	150	1280	640	440	400	200	6×21
50/10	11	270	125	510	80	50	648	340	225	1931	90	263	358	613	1311	615	1580	150	1280	640	380	340	170	6×21
	15	270	150	535	80	50	648	340	225	2026	90	263	358	610	1311	710	1580	150	1280	640	380	340	170	6×21
	18,5	270	171	556	80	50	648	340	225	2046	90	263	358	628	1311	730	1640	150	1340	670	440	400	200	6×21
	22	270	190	575	80	50	648	340	225	2096	90	263	358	628	1311	780	1640	150	1340	670	440	400	200	6×21
50/11	11	289	125	531	80	50	710	340	225	1993	90	263	358	613	1373	615	1640	150	1340	670	380	340	170	6×21
	15	289	150	556	80	50	710	340	225	2088	90	263	358	610	1373	710	1640	150	1340	670	380	340	170	6×21
	18,5	289	171	577	80	50	710	340	225	2108	90	263	358	628	1373	730	1700	150	1400	700	440	400	200	6×21
	22	289	190	596	80	50	710	340	225	2158	90	263	358	628	1373	780	1700	150	1400	700	440	400	200	6×21
50/12	11	308	125	552	80	50	772	340	225	2055	90	263	358	613	1435	615	1700	150	1400	700	380	340	170	6×21
	15	308	150	577	80	50	772	340	225	2150	90	263	358	610	1435	710	1700	150	1400	700	380	340	170	6×21
	18,5	308	171	598	80	50	772	340	225	2170	90	263	358	628	1435	730	1780	150	1480	740	440	400	200	6×21
	22	308	190	617	80	50	772	340	225	2220	90	263	358	628	1435	780	1780	150	1480	740	440	400	200	6×21
50/13	15	327	150	596	80	50	834	340	225	2212	90	263	358	610	1497	710	1840	150	1540	770	440	400	200	6×21
	18,5	327	171	617	80	50	834	340	225	2232	90	263	358	628	1497	730	1840	150	1540	770	440	400	200	6×21
	22	327	190	636	80	50	834	340	225	2282	90	263	358	628	1497	780	1840	150	1540	770	440	400	200	6×21
	30	327	255	701	80	50	834	340	225	2273	90	263	358	661	1497	771	1840	150	1580	790	480	440	220	6×21
50/14	15	346	150	617	80	50	896	340	225	2274	90	263	358	610	1559	710	1900	150	1600	800	440	400	200	6×21
	18,5	346	171	638	80	50	896	340	225	2294	90	263	358	628	1559	730	1900	150	1600	800	440	400	200	6×21
	22	346	190	657	80	50	896	340	225	2344	90	263	358	628	1559	780	1900	150	1600	800	440	400	200	6×21
	30	346	255	722	80	50	896	340	225	2335	90	263	358	661	1559	771	1940	150	1640	820	480	440	220	6×21
50/15	15	365	150	638	80	50	958	340	225	2336	90	263	358	610	1621	710	1960	150	1660	830	440	400	200	6×21
	18,5	365	171	659	80	50	958	340	225	2356	90	263	358	628	1621	730	1960	150	1660	830	440	400	200	6×21
	22	365	190	678	80	50	958	340	225	2406	90	263	358	628	1621	780	1960	150	1660	830	440	400	200	6×21
	30	365	255	743	80	50	958	340	225	2397	90	263	358	661	1621	771	2000	150	1700	850	480	440	220	6×21
50/16	18,5	384	171	698	80	50	1020	340	225	2418	90	263	378	648	1683	730	2020	150	1720	860	460	420	210	6×21
	22	384	190	717	80	50	1020	340	225	2468	90	263	378	648	1683	780	2020	150	1720	860	460	420	210	6×21
	30	384	255	782	80	50	1020	340	225	2459	90	263	378	681	1683	771	2060	150	1760	880	480	440	220	6×21
50/17	18,5	403	171	739	80	50	1082	340	225	2480	90	263	378	648	1745	730	2080	150	1780	890	460	420	210	6×21
	22	403	190	758	80	50	1082	340	225	2530	90	263	378	648	1745	780	2080	150	1780	890	460	420	210	6×21
	30	403	255	823	80	50	1082	340	225	2521	90	263	378	681	1745	771	2120	150	1820	910	480	440	220	6×21
	37	403	269	837	80	50	1082	340	225	2565	90	263	408	720	1745	815	2180	150	1880	940	540	500	250	6×21
50/18	18,5	422	171	761	80	50	1144	340	225	2542	90	263	378	648	1807	730	2140	150	1840	920	460	420	210	6×21
	22	422	190	780	80	50	1144	340	225	2592	90	263	378	648	1807	780	2140	150	1840	920	460	420	210	6×21
	30	422	255	845	80	50	1144	340	225	2583	90	263	378	681	1807	771	2180	150	1880	940	480	440	220	6×21
	37	422	269	859	80	50	1144	340	225	2627	90	263	408	720	1807	815	2240	150	1940	970	540	500	250	6×21
50/19	22	441	190	802	80	50	1206	340	225	2654	90	263	378	648	1869	780	2260	150	1960	980	480	440	220	6×21
	30	441	255	867	80	50	1206	340	225	2645	90	263	378	681	1869	771	2260	150	1960	980	480	440	220	6×21
	37	441	269	881	80	50	1206	340	225	2689	90	263	408	720	1869	815	2300	150	2000	1000	540	500	250	6×21
50/20	22	460	190	824	80	50	1268	340	225	2716	90	263	378	648	1931	780	2320	150	2020	1010	480	440	220	6×21
	30	460	255	889	80	50	1268	340	225	2707	90	263	378	681	1931	771	2320	150	2020	1010	480	440	220	6×21
	37	460	269	903	80	50	1268	340	225	2751	90	263	408	720	1931	815	2360	150	2060	1030	540	500	250	6×21

HP 80

1.450 rpm - Grease lubrication

HP model	DIMENSIONS (mm)																							
	kW	kg P.	kg M.	kg Tot.	Dn_1	Dn_2	a	f	h_2	L	g_1	g_2	h_1	h_3	l_1	l_2	m	m_1	m_2	m_3	n	n_1	n_2	s
80/1	1,5	137	30	250	125	80	120	360	250	1187	80	274	338	483	824	358	860	150	560	-	420	380	190	4×19
	2,2	137	36	256	125	80	120	360	250	1222	80	274	338	495	824	393	860	150	560	-	420	380	190	4×19
	3	137	40	260	125	80	120	360	250	1222	80	274	338	495	824	393	860	150	560	-	420	380	190	4×19
	4	137	46	266	125	80	120	360	250	1239	80	274	338	515	824	410	860	150	560	-	420	380	190	4×19
80/2	3	196	40	302	125	80	195	360	250	1297	80	274	358	495	899	393	1020	150	720	-	420	380	190	4×19
	4	196	46	308	125	80	195	360	250	1314	80	274	358	515	899	410	1020	150	720	-	420	380	190	4×19
	5,5	196	70	332	125	80	195	360	250	1384	80	274	358	555	899	480	1020	150	720	-	420	380	190	4×19
	7,5	196	57	319	125	80	195	360	250	1420	80	274	358	555	899	516	1020	150	720	-	420	380	190	4×19
80/3	5,5	225	70	363	125	80	270	360	250	1459	80	274	358	555	974	480	1220	150	920	-	420	380	190	4×19
	7,5	225	57	350	125	80	270	360	250	1495	80	274	358	555	974	516	1220	150	920	-	420	380	190	4×19
	11	225	125	418	125	80	270	360	250	1594	80	274	358	613	974	615	1220	150	920	-	420	380	190	4×19
	15	225	150	443	125	80	270	360	250	1689	80	274	358	610	974	710	1220	150	920	-	420	380	190	4×19
80/4	7,5	252	57	380	125	80	345	360	250	1570	80	274	358	555	1049	516	1280	150	980	-	420	380	190	4×19
	11	252	125	448	125	80	345	360	250	1669	80	274	358	613	1049	615	1280	150	980	-	420	380	190	4×19
	15	252	150	473	125	80	345	360	250	1764	80	274	358	610	1049	710	1280	150	980	-	420	380	190	4×19
80/5	11	281	125	514	125	80	420	360	250	1744	80	274	358	613	1124	615	1360	150	1060	-	420	380	190	4×19
	15	281	150	539	125	80	420	360	250	1839	80	274	358	610	1124	710	1360	150	1060	-	420	380	190	4×19
	18,5	281	171	560	125	80	420	360	250	1859	80	274	358	628	1124	730	1440	150	1140	-	440	400	200	4×19
80/6	15	310	150	590	125	80	495	360	250	1914	80	274	378	610	1199	710	1520	150	1220	610	460	420	210	6×21
	18,5	310	171	611	125	80	495	360	250	1934	80	274	378	628	1199	730	1520	150	1220	610	460	420	210	6×21
	22	310	190	630	125	80	495	360	250	1984	80	274	378	628	1199	780	1520	150	1220	610	460	420	210	6×21
	30	310	255	685	125	80	495	360	250	1975	80	274	378	681	1199	771	1560	150	1260	630	500	460	230	6×21
80/7	15	339	150	623	125	80	570	360	250	1989	80	274	378	610	1274	710	1600	150	1300	650	460	420	210	6×21
	18,5	339	171	644	125	80	570	360	250	2009	80	274	378	628	1274	730	1600	150	1300	650	460	420	210	6×21
	22	339	190	663	125	80	570	360	250	2059	80	274	378	628	1274	780	1600	150	1300	650	460	420	210	6×21
	30	339	255	718	125	80	570	360	250	2050	80	274	378	681	1274	771	1640	150	1340	670	500	460	230	6×21
80/8	18,5	369	171	678	125	80	645	360	250	2084	80	274	378	628	1349	730	1720	150	1420	710	500	460	230	6×21
	22	369	190	697	125	80	645	360	250	2134	80	274	378	628	1349	780	1720	150	1420	710	500	460	230	6×21
	30	369	255	752	125	80	645	360	250	2125	80	274	378	681	1349	771	1720	150	1420	710	500	460	230	6×21
80/9	22	398	190	726	125	80	720	360	250	2209	80	274	378	628	1424	780	1800	150	1500	750	500	460	230	6×21
	30	398	255	781	125	80	720	360	250	2200	80	274	378	681	1424	771	1800	150	1500	750	500	460	230	6×21
	37	398	269	805	125	80	720	360	250	2244	80	274	383	695	1424	815	1840	150	1540	770	540	500	250	6×21
80/10	22	427	190	759	125	80	795	360	250	2284	80	274	378	628	1499	780	1860	150	1560	780	500	460	230	6×21
	30	427	255	814	125	80	795	360	250	2275	80	274	378	681	1499	771	1860	150	1560	780	500	460	230	6×21
	37	427	269	838	125	80	795	360	250	2319	80	274	383	695	1499	815	1920	150	1620	810	540	500	250	6×21
80/11	30	456	255	795	125	80	870	360	250	2350	80	274	383	681	1574	771	2000	150	1700	850	540	500	250	6×21
	37	456	269	819	125	80	870	360	250	2394	80	274	383	695	1574	815	2000	150	1700	850	540	500	250	6×21
	45	456	353	903	125	80	870	360	250	2399	80	274	383	695	1574	820	2000	150	1700	850	540	500	250	6×21
80/12	30	485	255	844	125	80	945	360	250	2425	80	274	403	681	1649	771	2080	150	1780	890	540	500	250	6×21
	37	485	269	868	125	80	945	360	250	2469	80	274	403	695	1649	815	2080	150	1780	890	540	500	250	6×21
	45	485	353	952	125	80	945	360	250	2474	80	274	403	695	1649	820	2080	150	1780	890	540	500	250	6×21
80/13	30	515	255	886	125	80	1020	360	250	2500	80	274	403	681	1724	771	2140	150	1840	920	540	500	250	6×21
	37	515	269	910	125	80	1020	360	250	2544	80	274	403	695	1724	815	2140	150	1840	920	540	500	250	6×21
	45	515	353	994	125	80	1020	360	250	2549	80	274	403	695	1724	820	2140	150	1840	920	540	500	250	6×21
	55	515	450	1091	125	80	1020	360	250	2639	80	274	433	788	1724	910	2220	150	1920	960	600	560	280	6×21
80/14	37	544	269	943	125	80	1095	360	250	2619	80	274	403	695	1799	815	2220	150	1920	960	540	500	250	6×21
	45	544	353	1027	125	80	1095	360	250	2624	80	274	403	695	1799	820	2220	150	1920	960	540	500	250	6×21
	55	544	450	1124	125	80	1095	360	250	2714	80	274	433	788	1799	910	2300	150	2000	1000	600	560	280	6×21
80/15	37	573	269	983	125	80	1170	360	250	2694	80	274	403	695	1874	815	2300	150	2000	1000	540	500	250	6×21
	45	573	353	1067	125	80	1170	360	250	2699	80	274	403	695	1874	820	2300	150	2000	1000	540	500	250	6×21
	55	573	450	1164	125	80	1170	360	250	2789	80	274	433	788	1874	910	2360	150	2060	1030	600	560	280	6×21
	75	573	605	1319	125	80	1170	360	250	2864	80	274	473	871	1874	985	2460	150	2160	1080	660	620	310	6×21
80/16	37	602	269	1040	125	80	1245	360	250	2769	80	274	403	695	1949	815	2380	150	2080	1040	540	500	250	6×21
	45	602	353	1124	125	80	1245	360	250	2774	80	274	403	695	1949	820	2380	150	2080	1040	540	500	250	6×21
	55	602	450	1221	125	80	1245	360	250	2864	80	274	433	788	1949	910	2440	150	2140	1070	600	560	280	6×21
	75	602	605	1376	125	80	1245	360	250	2939	80	274	493	871	1949	985	2550	150	2250	1125	660	620	310	8×21
80/17	45	631	353	1158	125	80	1320	360	250	2879	80	274	453	695	2024	850	2520	150	2220	1110	620	580	290	8×21
	55	631	450	1255	125	80	1320	360	250	2939	80	274	453	788	2024	910	2520	150	2220	1110	620	580	290	8×21
	75	631	605	1410	125	80	1320	360	250	3014	80	274	493	871	2024	985	2610	150	2310	1155	660	620	310	8×21
80/18	45	660	353	1193	125	80	1395	360	250	2954	80	274	453	695	2099	850	2610	150	2310	1155	620	580	290	8×21
	55	660	450	1290	125	80	1395	360	250	3014	80	274	453	788	2099	910	2610	150	2310	1155	620	580	290	8×21
	75	660	605	1445	125	80	1395	360	250	3089	80	274	493	871	2099	985	2700	150	2400	1200	660	620	310	8×21

HP 100

1.450 rpm - Grease lubrication

HP model	DIMENSIONS (mm)																							
	kW	kg P.	kg M.	kg Tot.	Dn_1	Dn_2	a	f	h_2	L	g_1	g_2	h_1	h_3	l_1	l_2	m	m_1	m_2	m_3	n	n_1	n_2	s
100/1	5,5	241	70	380	150	100	145	410	315	1413	70	293	408	605	928	480	1040	150	740	-	480	440	220	4×19
	7,5	241	57	404	150	100	145	410	315	1449	70	293	408	605	928	516	1040	150	740	-	480	440	220	4×19
	11	241	125	459	150	100	145	410	315	1548	70	293	408	663	928	615	1160	150	860	-	480	440	220	4×19
100/2	11	286	125	510	150	100	235	410	315	1638	70	293	408	663	1018	615	1240	150	940	-	480	440	220	4×19
	15	286	150	535	150	100	235	410	315	1733	70	293	408	660	1018	710	1240	150	940	-	480	440	220	4×19
	18,5	286	171	555	150	100	235	410	315	1753	70	293	408	678	1018	730	1300	150	1000	-	500	460	230	4×19
100/3	15	331	150	593	150	100	325	410	315	1823	70	293	408	663	1108	710	1400	150	1100	-	500	460	230	4×19
	18,5	331	171	607	150	100	325	410	315	1843	70	293	408	660	1108	730	1400	150	1100	-	500	460	230	4×19
	22	331	190	625	150	100	325	410	315	1893	70	293	408	678	1108	780	1400	150	1100	-	500	460	230	4×19
	30	331	255	688	150	100	325	410	315	1884	70	293	408	711	1108	771	1420	150	1120	-	500	460	230	4×19
100/4	18,5	376	171	677	150	100	415	410	315	1933	70	293	428	660	1198	730	1520	150	1220	610	500	460	230	6×21
	22	376	190	695	150	100	415	410	315	1983	70	293	428	678	1198	780	1520	150	1220	610	500	460	230	6×21
	30	376	255	758	150	100	415	410	315	1974	70	293	428	711	1198	771	1520	150	1220	610	500	460	230	6×21
	37	376	269	782	150	100	415	410	315	2018	70	293	413	725	1198	815	1600	150	1300	650	520	480	240	6×21
100/5	22	421	190	692	150	100	505	410	315	2073	70	293	413	678	1288	780	1680	150	1380	690	520	480	240	6×21
	30	421	255	755	150	100	505	410	315	2064	70	293	413	711	1288	771	1680	150	1380	690	520	480	240	6×21
	37	421	269	779	150	100	505	410	315	2108	70	293	413	725	1288	815	1680	150	1380	690	520	480	240	6×21
	45	421	353	863	150	100	505	410	315	2113	70	293	413	725	1288	820	1680	150	1380	690	520	480	240	6×21
100/6	30	466	255	795	150	100	595	410	315	2154	70	293	413	711	1378	771	1780	150	1480	740	520	480	240	6×21
	37	466	269	808	150	100	595	410	315	2198	70	293	413	725	1378	815	1780	150	1480	740	520	480	240	6×21
	45	466	353	903	150	100	595	410	315	2203	70	293	413	725	1378	820	1780	150	1480	740	520	480	240	6×21
	55	466	450	1000	150	100	595	410	315	2293	70	293	413	768	1378	910	1840	150	1540	770	560	520	260	6×21
100/7	37	511	269	857	150	100	685	410	315	2288	70	293	413	725	1468	815	1860	150	1560	780	520	480	240	6×21
	45	511	353	952	150	100	685	410	315	2293	70	293	413	725	1468	820	1860	150	1560	780	520	480	240	6×21
	55	511	450	1049	150	100	685	410	315	2383	70	293	413	725	1468	910	1920	150	1620	810	560	520	260	6×21
100/8	45	556	353	1003	150	100	775	410	315	2383	70	293	433	725	1558	820	2020	150	1720	860	580	540	270	6×21
	55	556	450	1100	150	100	775	410	315	2473	70	293	433	725	1558	910	2020	150	1720	860	580	540	270	6×21
	75	556	605	1255	150	100	775	410	315	2548	70	293	463	861	1558	985	2120	150	1820	910	640	600	300	6×21
100/9	45	601	353	1053	150	100	865	410	315	2473	70	293	433	725	1648	820	2100	150	1800	900	580	540	270	6×21
	55	601	450	1150	150	100	865	410	315	2563	70	293	433	725	1648	910	2100	150	1800	900	580	540	270	6×21
	75	601	605	1305	150	100	865	410	315	2638	70	293	463	861	1648	985	2200	150	1900	950	640	600	300	6×21
100/10	45	646	353	1105	150	100	955	410	315	2563	70	293	463	775	1738	820	2300	150	2000	1000	640	600	300	6×21
	55	646	450	1202	150	100	955	410	315	2653	70	293	463	818	1738	910	2300	150	2000	1000	640	600	300	6×21
	75	646	605	1357	150	100	955	410	315	2728	70	293	463	861	1738	985	2300	150	2000	1000	640	600	300	6×21
	90	646	700	1452	150	100	955	410	315	2778	70	293	463	861	1738	1035	2300	150	2000	1000	640	600	300	6×21
100/11	55	691	450	1252	150	100	1045	410	315	2743	70	293	463	818	1828	910	2380	150	2080	1040	640	600	300	6×21
	75	691	605	1407	150	100	1045	410	315	2818	70	293	463	861	1828	985	2380	150	2080	1040	640	600	300	6×21
	90	691	700	1502	150	100	1045	410	315	2868	70	293	463	861	1828	1035	2380	150	2080	1040	640	600	300	6×21
100/12	55	736	450	1501	150	100	1135	410	315	2833	70	293	463	818	1918	910	2480	150	2180	1090	640	600	300	6×21
	75	736	605	1656	150	100	1135	410	315	2908	70	293	463	861	1918	985	2480	150	2180	1090	640	600	300	6×21
	90	736	700	1751	150	100	1135	410	315	2958	70	293	463	861	1918	1035	2480	150	2180	1090	640	600	300	6×21
	110	736	925	1976	150	100	1135	410	315	3083	70	293	543	1073	1918	1160	2640	150	2340	780	740	700	350	8×21
100/13	75	781	605	1708	150	100	1225	410	315	2998	70	293	483	881	2008	985	2580	150	2280	1140	640	600	300	8×21
	90	781	700	1803	150	100	1225	410	315	3048	70	293	483	881	2008	1035	2580	150	2280	1140	640	600	300	8×21
	110	781	925	2028	150	100	1225	410	315	3173	70	293	543	1073	2008	1160	2730	150	2430	810	740	700	350	8×21
100/14	75	826	605	1760	150	100	1315	410	315	3088	70	293	483	881	2098	985	2670	150	2370	790	640	600	300	8×21
	90	826	700	1855	150	100	1315	410	315	3138	70	293	483	881	2098	1035	2670	150	2370	790	640	600	300	8×21
	110	826	925	2080	150	100	1315	410	315	3263	70	293	543	1073	2098	1160	2820	150	2520	840	740	700	350	8×21
100/15	90	871	700	1742	150	100	1405	410	315	3228	70	293	543	941	2188	1035	2910	150	2610	870	740	700	350	8×21
	110	871	925	1967	150	100	1405	410	315	3353	70	293	543	1073	2188	1160	2910	150	2610	870	740	700	350	8×21
	132	871	1180	2222	150	100	1405	410	315	3383	70	293	543	1073	2188	1190	2910	150	2610	870	740	700	350	8×21
100/16	90	961	700	1857	150	100	1495	410	315	3318	70	293	543	941	2278	1035	3000	150	2700	900	740	700	350	8×21
	110	961	925	2082	150	100	1495	410	315	3443	70	293	543	1073	2278	1160	3000	150	2700	900	740	700	350	8×21
	132	961	1180	2337	150	100	1495	410	315	3473	70	293	543	1073	2278	1190	3000	150	2700	900	740	700	350	8×21

HP 125

1.450 rpm - Grease lubrication

HP model	DIMENSIONS (mm)																							
	kW	kg P.	kg M.	kg Tot.	Dn_1	Dn_2	a	f	h_2	L	g_1	g_2	h_1	h_3	l_1	l_2	m	m_1	m_2	m_3	n	n_1	n_2	s
125/1	18,5	401	171	707	200	125	185	514,5	350	1885,5	50	351	498	768	1150,5	730	1420	150	1120	-	600	560	280	4×19
	22	401	190	645	200	125	185	514,5	350	1935,5	50	351	498	768	1150,5	780	1420	150	1120	-	600	560	280	4×19
	30	401	255	791	200	125	185	514,5	350	1926,5	50	351	498	801	1150,5	771	1420	150	1120	-	600	560	280	4×19
125/2	37	482	269	982	200	125	295	514,5	350	2080,5	50	351	518	830	1260,5	815	1660	150	1360	680	600	560	280	6×21
	45	482	353	1066	200	125	295	514,5	350	2085,5	50	351	518	830	1260,5	820	1660	150	1360	680	600	560	280	6×21
	55	482	450	1163	200	125	295	514,5	350	2175,5	50	351	518	873	1260,5	910	1660	150	1360	680	600	560	280	6×21
125/3	45	563	353	1103	200	125	405	514,5	350	2195,5	50	351	518	830	1370,5	820	1860	150	1560	780	640	600	300	6×21
	55	563	450	1200	200	125	405	514,5	350	2285,5	50	351	518	873	1370,5	910	1860	150	1560	780	640	600	300	6×21
	75	563	605	1355	200	125	405	514,5	350	2360,5	50	351	518	916	1370,5	985	1860	150	1560	780	640	600	300	6×21
125/4	75	644	605	1484	200	125	515	514,5	350	2470,5	50	351	518	916	1480,5	985	2140	150	1840	920	720	680	340	6×21
	90	644	700	1579	200	125	515	514,5	350	2520,5	50	351	518	916	1480,5	1035	2140	150	1840	920	720	680	340	6×21
	110	644	925	1804	200	125	515	514,5	350	2645,5	50	351	518	1048	1480,5	1160	2140	150	1840	920	720	680	340	6×21
125/5	90	725	700	1591	200	125	625	514,5	350	2630,5	50	351	518	916	1590,5	1035	2260	150	1960	980	720	680	340	6×21
	110	725	925	1816	200	125	625	514,5	350	2755,5	50	351	518	1048	1590,5	1160	2260	150	1960	980	720	680	340	6×21
	132	725	1180	2071	200	125	625	514,5	350	2785,5	50	351	518	1048	1590,5	1190	2260	150	1960	980	720	680	340	6×21
125/6	110	806	925	1884	200	125	735	514,5	350	2865,5	50	351	518	1048	1700,5	1160	2360	150	2060	1030	720	680	340	6×21
	132	806	1180	2139	200	125	735	514,5	350	2895,5	50	351	518	1048	1700,5	1190	2360	150	2060	1030	720	680	340	6×21
	160	806	1161	2120	200	125	735	514,5	350	3025,5	50	351	518	1048	1700,5	1320	2360	150	2060	1030	720	680	340	6×21
125/7	132	887	1180	2237	200	125	845	514,5	350	3005,5	50	351	518	1048	1810,5	1190	2480	150	2180	1090	720	680	340	6×21
	160	887	1161	2218	200	125	845	514,5	350	3135,5	50	351	518	1048	1810,5	1320	2480	150	2180	1090	720	680	340	6×21
	200	887	1241	2298	200	125	845	514,5	350	3135,5	50	351	518	1048	1810,5	1320	2480	150	2180	1090	720	680	340	6×21
125/8	132	968	1180	2534	200	125	955	514,5	350	3115,5	50	351	538	1048	1920,5	1190	2580	150	2280	760	720	680	340	8×21
	160	968	1161	2515	200	125	955	514,5	350	3245,5	50	351	538	1048	1920,5	1320	2580	150	2280	760	720	680	340	8×21
	200	968	1241	2595	200	125	955	514,5	350	3245,5	50	351	538	1048	1920,5	1320	2580	150	2280	760	720	680	340	8×21
125/9	160	1049	1161	2410	200	125	1065	514,5	350	3355,5	50	351	538	1048	2030,5	1320	2700	150	2400	800	720	680	340	8×21
	200	1049	1241	2483	200	125	1065	514,5	350	3355,5	50	351	538	1048	2030,5	1320	2700	150	2400	800	720	680	340	8×21
	250	1049	1870	3071	200	125	1065	514,5	350	3535,5	50	351	562	1217	2030,5	1500	2880	150	2580	860	840	800	400	8×21
125/10	200	1130	1241	2571	200	125	1175	514,5	350	3465,5	50	351	538	1048	2140,5	1320	2820	150	2520	840	720	680	340	8×21
	250	1130	1870	3159	200	125	1175	514,5	350	3645,5	50	351	562	1217	2140,5	1500	3000	150	2700	900	840	800	400	8×21
125/11	200	1211	1241	2856	200	125	1285	514,5	350	3575,5	50	351	582	1048	2250,5	1320	3090	150	2790	930	840	800	400	8×21
	250	1211	1870	3485	200	125	1285	514,5	350	3755,5	50	351	582	1217	2250,5	1500	3090	150	2790	930	840	800	400	8×21
	315	1211	2090	3705	200	125	1285	514,5	350	3755,5	50	351	582	1217	2250,5	1500	3090	150	2790	930	840	800	400	8×21
125/12	250	1292	1870	3566	200	125	1395	514,5	350	3865,5	50	351	582	1217	2360,5	1500	3210	150	2910	970	840	800	400	8×21
	315	1292	2090	3786	200	125	1395	514,5	350	3865,5	50	351	582	1217	2360,5	1500	3210	150	2910	970	840	800	400	8×21

HP 150

1.450 rpm - Grease lubrication

HP model	DIMENSIONS (mm)																							
	kW	kg P.	kg M.	kg Tot.	Dn_1	Dn_2	a	f	h_2	L	g_1	g_2	h_1	h_3	l_1	l_2	m	m_1	m_2	m_3	n	n_1	n_2	s
150/1	30	720	255	1066	250	150	235	552,5	420	2078,5	40	405	533	836	1302,5	771	1740	150	1440	720	720	680	340	6×21
	37	720	269	1080	250	150	235	552,5	420	2122,5	40	405	533	845	1302,5	815	1740	150	1440	720	720	680	340	6×21
	45	720	353	1164	250	150	235	552,5	420	2127,5	40	405	533	845	1302,5	820	1740	150	1440	720	720	680	340	6×21
	55	720	450	1261	250	150	235	552,5	420	2217,5	40	405	533	888	1302,5	910	1740	150	1440	720	720	680	340	6×21
	75	720	605	1416	250	150	235	552,5	420	2292,5	40	405	533	931	1302,5	985	1740	150	1440	720	720	680	340	6×21
150/2	75	856	605	1592	250	150	370	552,5	420	2427,5	40	405	553	951	1437,5	985	2060	150	1760	880	720	680	340	6×21
	90	856	700	1687	250	150	370	552,5	420	2477,5	40	405	553	951	1437,5	1035	2060	150	1760	880	720	680	340	6×21
	110	856	925	1912	250	150	370	552,5	420	2602,5	40	405	553	1083	1437,5	1160	2060	150	1760	880	720	680	340	6×21
	132	856	1180	2167	250	150	370	552,5	420	2632,5	40	405	553	1083	1437,5	1190	2060	150	1760	880	720	680	340	6×21
150/3	90	992	700	1879	250	150	505	552,5	420	2612,5	40	405	553	951	1572,5	1035	2180	150	1880	940	720	680	340	6×21
	110	992	925	2104	250	150	505	552,5	420	2737,5	40	405	553	1083	1572,5	1160	2180	150	1880	940	720	680	340	6×21
	132	992	1180	2359	250	150	505	552,5	420	2767,5	40	405	553	1083	1572,5	1190	2180	150	1880	940	720	680	340	6×21
	160	992	1161	2340	250	150	505	552,5	420	2897,5	40	405	553	1083	1572,5	1320	2180	150	1880	940	720	680	340	6×21
	200	992	1241	2420	250	150	505	552,5	420	2897,5	40	405	553	1083	1572,5	1320	2180	150	1880	940	720	680	340	6×21
150/4	160	1128	1161	2817	250	150	640	552,5	420	3032,5	40	405	573	1103	1707,5	1320	2520	150	2220	740	840	800	400	8×21
	200	1128	1241	2897	250	150	640	552,5	420	3032,5	40	405	573	1103	1707,5	1320	2520	150	2220	740	840	800	400	8×21
	250	1128	1870	3526	250	150	640	552,5	420	3212,5	40	405	573	1228	1707,5	1500	2520	150	2220	740	840	800	400	8×21
	315	1128	2090	3746	250	150	640	552,5	420	3212,5	40	405	573	1228	1707,5	1500	2520	150	2220	740	840	800	400	8×21
150/5	200	1264	1241	3033	250	150	775	552,5	420	3167,5	40	405	573	1103	1842,5	1320	2640	150	2340	780	840	800	400	8×21
	250	1264	1870	3662	250	150	775	552,5	420	3347,5	40	405	573	1228	1842,5	1500	2640	150	2340	780	840	800	400	8×21
	315	1264	2090	3882	250	150	775	552,5	420	3347,5	40	405	573	1228	1842,5	1500	2640	150	2340	780	840	800	400	8×21
	365	1264	2050	3842	250	150	775	552,5	420	3657,5	40	405	573	1118	1842,5	1810	2640	150	2340	780	840	800	400	8×21
150/6	250	1400	1870	3813	250	150	910	552,5	420	3482,5	40	405	573	1228	1977,5	1500	2760	150	2460	820	840	800	400	8×21
	315	1400	2090	4033	250	150	910	552,5	420	3482,5	40	405	573	1228	1977,5	1500	2760	150	2460	820	840	800	400	8×21
	365	1400	2050	3993	250	150	910	552,5	420	3792,5	40	405	573	1118	1977,5	1810	2760	150	2460	820	840	800	400	8×21
	400	1400	2350	4293	250	150	910	552,5	420	3967,5	40	405	573	1148	1977,5	1985	2760	150	2460	820	840	800	400	8×21
150/7	315	1536	2090	4179	250	150	1045	552,5	420	3617,5	40	405	573	1228	2112,5	1500	2910	150	2610	870	840	800	400	8×21
	365	1536	2050	4139	250	150	1045	552,5	420	3927,5	40	405	573	1118	2112,5	1810	2910	150	2610	870	840	800	400	8×21
	400	1536	2350	4439	250	150	1045	552,5	420	4102,5	40	405	573	1148	2112,5	1985	2910	150	2610	870	840	800	400	8×21
	470	1536	2550	4639	250	150	1045	552,5	420	4102,5	40	405	573	1148	2112,5	1985	2910	150	2610	870	840	800	400	8×21
	560	1536	2750	4839	250	150	1045	552,5	420	4102,5	40	405	573	1148	2112,5	1985	2910	150	2610	870	840	800	400	8×21
150/8	365	1672	2050	4285	250	150	1180	552,5	420	4062,5	40	405	593	1138	2247,5	1810	3030	150	2730	910	840	800	400	8×21
	400	1672	2350	4585	250	150	1180	552,5	420	4237,5	40	405	593	1168	2247,5	1985	3030	150	2730	910	840	800	400	8×21
	470	1672	2550	4785	250	150	1180	552,5	420	4237,5	40	405	593	1168	2247,5	1985	3030	150	2730	910	840	800	400	8×21
	560	1672	2750	4985	250	150	1180	552,5	420	4237,5	40	405	593	1168	2247,5	1985	3030	150	2730	910	840	800	400	8×21
	600	1672	3400	5635	250	150	1180	552,5	420	4377,5	40	405	632	1242	2247,5	2125	3480	150	3180	1060	980	940	470	8×21
150/9	400	1808	2350	4731	250	150	1315	552,5	420	4372,5	40	405	593	1168	2382,5	1985	3180	150	2880	960	840	800	400	8×21
	470	1808	2550	4931	250	150	1315	552,5	420	4372,5	40	405	593	1168	2382,5	1985	3180	150	2880	960	840	800	400	8×21
	560	1808	2750	5131	250	150	1315	552,5	420	4372,5	40	405	652	1227	2382,5	1985	3630	150	3330	1110	980	940	470	8×21
	600	1808	3400	5781	250	150	1315	552,5	420	4512,5	40	405	652	1262	2382,5	2125	3630	150	3330	1110	980	940	470	8×21
150/10	470	1944	2550	5077	250	150	1450	552,5	420	4507,5	40	405	593	1168	2517,5	1985	3300	150	3000	1000	840	800	400	8×21
	560	1944	2750	5277	250	150	1450	552,5	420	4507,5	40	405	593	1168	2517,5	1985	3300	150	3000	1000	840	800	400	8×21
	600	1944	3400	5927	250	150	1450	552,5	420	4647,5	40	405	652	1262	2517,5	2125	3750	150	3450	1150	980	940	470	8×21
	680	1944	3600	6127	250	150	1450	552,5	420	4647,5	40	405	652	1262	2517,5	2125	3750	150	3450	1150	980	940	470	8×21
150/11	470	2080	2550	5213	250	150	1585	552,5	420	4642,5	40	405	593	1168	2652,5	1985	3450	150	3150	1050	840	800	400	8×21
	560	2080	2750	5413	250	150	1585	552,5	420	4642,5	40	405	593	1168	2652,5	1985	3450	150	3150	1050	840	800	400	8×21
	600	2080	3400	6063	250	150	1585	552,5	420	4782,5	40	405	593	1203	2652,5	2125	3450	150	3150	1050	840	800	400	8×21
	680	2080	3600	6263	250	150	1585	552,5	420	4782,5	40	405	593	1203	2652,5	2125	3450	150	3150	1050	840	800	400	8×21
	750	2080	3800	6463	250	150	1585	552,5	420	4782,5	40	405	593	1203	2652,5	2125	3450	150	3150	1050	840	800	400	8×21
	900	2080	4700	7363	250	150	1585	552,5	420	5047,5	40	405	593	1243	2652,5	2390	3450	150	3150	1050	840	800	400	8×21

HP 250

1.450 rpm - Grease lubrication

HP model	DIMENSIONS (mm)																							
	kW	kg P.	kg M.	kg Tot.	Dn_1	Dn_2	a	f	h_2	L	g_1	g_2	h_1	h_3	l_1	l_2	m	m_1	m_2	m_3	n	n_1	n_2	s
250/1	90	1247	700	2159	300	250	310	580	550	2415	-	385	682	1080	1425	985	2060	150	1760	880	920	880	440	6×21
	110	1247	925	2384	300	250	310	580	550	2590	-	385	682	1212	1425	1160	2060	150	1760	880	920	880	440	6×21
	132	1247	1180	2639	300	250	310	580	550	2730	-	385	682	1212	1425	1300	2060	150	1760	880	920	880	440	6×21
	160	1247	1161	2620	300	250	310	580	550	2780	-	385	682	1212	1425	1350	2060	150	1760	880	920	880	440	6×21
	200	1247	1241	2693	300	250	310	580	550	2780	-	385	682	1212	1425	1350	2060	150	1760	880	920	880	440	6×21
250/2	160	1563	1161	2881	300	250	505	580	550	2975	-	385	682	1212	1620	1350	2420	150	2120	1060	920	880	440	6×21
	200	1563	1241	2961	300	250	505	580	550	2975	-	385	682	1212	1620	1350	2420	150	2120	1060	920	880	440	6×21
	250	1563	1870	3590	300	250	505	580	550	3155	-	385	682	1337	1620	1530	2420	150	2120	1060	920	880	440	6×21
	315	1563	2090	3810	300	250	505	580	550	3155	-	385	682	1337	1620	1530	2420	150	2120	1060	920	880	440	6×21
	365	1563	2050	3860	300	250	505	580	550	3435	-	385	682	1247	1620	1810	2420	150	2120	1060	920	880	440	6×21
	400	1563	2350	4160	300	250	505	580	550	3610	-	385	682	1289	1620	1985	2420	150	2120	1060	920	880	440	6×21
250/3	250	1879	1870	4036	300	250	700	580	550	3350	-	385	702	1337	1815	1530	2610	150	2310	770	920	880	440	8×21
	315	1879	2090	4256	300	250	700	580	550	3350	-	385	702	1337	1815	1530	2610	150	2310	770	920	880	440	8×21
	365	1879	2050	4216	300	250	700	580	550	3630	-	385	702	1247	1815	1810	2610	150	2310	770	920	880	440	8×21
	400	1879	2350	4516	300	250	700	580	550	3805	-	385	702	1277	1815	1985	2610	150	2310	770	920	880	440	8×21
	470	1879	2550	4716	300	250	700	580	550	3805	-	385	702	1277	1815	1985	2610	150	2310	770	920	880	440	8×21
	560	1879	2750	4916	300	250	700	580	550	3805	-	385	722	1297	1815	1985	3060	150	2760	920	980	940	470	8×21
250/4	365	2195	2050	4552	300	250	895	580	550	3825	-	385	722	1267	2010	1810	3270	150	2970	990	980	940	470	8×21
	400	2195	2350	4852	300	250	895	580	550	4000	-	385	722	1297	2010	1985	3270	150	2970	990	980	940	470	8×21
	470	2195	2550	5052	300	250	895	580	550	4000	-	385	722	1297	2010	1985	3270	150	2970	990	980	940	470	8×21
	560	2195	2750	5252	300	250	895	580	550	4000	-	385	722	1297	2010	1985	3270	150	2970	990	980	940	470	8×21
	600	2195	3400	5902	300	250	895	580	550	4140	-	385	722	1332	2010	2125	3600	150	3300	1100	1080	1040	570	8×21
	680	2195	3600	6102	300	250	895	580	550	4140	-	385	722	1332	2010	2125	3600	150	3300	1100	1080	1040	570	8×21
	750	2195	3800	6302	300	250	895	580	550	4140	-	385	722	1332	2010	2125	3600	150	3300	1100	1080	1040	570	8×21
	900	2195	4700	7202	300	250	895	580	550	4405	-	385	742	1392	2010	2390	3600	150	3300	1100	1080	1040	570	8×21
250/5	470	2511	2550	5383	300	250	1090	580	550	4195	-	385	722	1297	2205	1985	3450	150	3150	1050	980	940	470	8×21
	560	2511	2750	5583	300	250	1090	580	550	4195	-	385	722	1297	2205	1985	3450	150	3150	1050	980	940	470	8×21
	600	2511	3400	6233	300	250	1090	580	550	4335	-	385	722	1332	2205	2125	3450	150	3150	1050	980	940	470	8×21
	680	2511	3600	6433	300	250	1090	580	550	4335	-	385	722	1332	2205	2125	3450	150	3150	1050	980	940	470	8×21
	750	2511	3800	6633	300	250	1090	580	550	4335	-	385	722	1332	2205	2125	3450	150	3150	1050	980	940	470	8×21
	900	2511	4700	7533	300	250	1090	580	550	4600	-	385	722	1372	2205	2390	3450	150	3150	1050	980	940	470	8×21
	950	2511	5000	7833	300	250	1090	580	550	4600	-	385	722	1372	2205	2390	3450	150	3150	1050	980	940	470	8×21
	1050	2511	5300	8133	300	250	1090	580	550	4600	-	385	742	1392	2205	2390	3780	150	3480	1160	1080	1040	570	8×21
250/6	560	2827	2750	5934	300	250	1285	580	550	4390	-	385	742	1317	2400	1985	3990	150	3690	1230	1080	1040	570	8×21
	600	2827	3400	6584	300	250	1285	580	550	4530	-	385	742	1352	2400	2125	3990	150	3690	1230	1080	1040	570	8×21
	680	2827	3600	6784	300	250	1285	580	550	4530	-	385	742	1352	2400	2125	3990	150	3690	1230	1080	1040	570	8×21
	750	2827	3800	6984	300	250	1285	580	550	4530	-	385	742	1352	2400	2125	3990	150	3690	1230	1080	1040	570	8×21
	900	2827	4700	7884	300	250	1285	580	550	4795	-	385	742	1392	2400	2390	3990	150	3690	1230	1080	1040	570	8×21
	950	2827	5000	8184	300	250	1285	580	550	4795	-	385	742	1392	2400	2390	3990	150	3690	1230	1080	1040	570	8×21
	1050	2827	5300	8484	300	250	1285	580	550	4795	-	385	742	1392	2400	2390	3990	150	3690	1230	1080	1040	570	8×21
250/7	750	3143	3800	7325	300	250	1480	580	550	4725	-	385	762	1372	2595	2125	4170	150	3870	1290	1080	1024	512	8×28
	900	3143	4700	8225	300	250	1480	580	550	4990	-	385	762	1412	2595	2390	4170	150	3870	1290	1080	1024	512	8×28
	950	3143	5000	8525	300	250	1480	580	550	4990	-	385	762	1412	2595	2390	4170	150	3870	1290	1080	1024	512	8×28
	1050	3143	5300	8825	300	250	1480	580	550	4990	-	385	762	1412	2595	2390	4170	150	3870	1290	1080	1024	512	8×28
	1200	3143	5900	9425	300	250	1480	580	550	5125	-	385	762	1462	2595	2525	4170	150	3870	1290	1080	1024	512	8×28
250/8	750	3459	3800	7676	300	250	1675	580	550	4920	-	385	762	1372	2790	2125	4380	150	4080	1360	1080	1024	512	8×28
	900	3459	4700	8576	300	250	1675	580	550	5185	-	385	762	1412	2790	2390	4380	150	4080	1360	1080	1024	512	8×28
	950	3459	5000	8876	300	250	1675	580	550	5185	-	385	762	1412	2790	2390	4380	150	4080	1360	1080	1024	512	8×28
	1050	3459	5300	9176	300	250	1675	580	550	5185	-	385	762	1412	2790	2390	4380	150	4080	1360	1080	1024	512	8×28
	1200	3459	5900	9776	300	250	1675	580	550	5320	-	385	762	1462	2790	2525	4380	150	4080	1360	1080	1024	512	8×28
	1300	3459	6300	10176	300	250	1675	580	550	5320	-	385	762	1462	2790	2525	4380	150	4080	1360	1080	1024	512	8×28

HP 25

2.950 rpm - Grease lubrication

HP model	DIMENSIONS (mm)																							
	kW	kg P.	kg M.	kg Tot.	Dn_1	Dn_2	a	f	h_2	L	g_1	g_2	h_1	h_3	l_1	l_2	m	m_1	m_2	m_3	n	n_1	n_2	s
25/1	1,1	39	18	86	40	25	55	239,5	165	774,5	100	142	263	393	486,5	283	620	150	320	-	310	275	137,5	4×17
	1,5	39	23	91	40	25	55	239,5	165	821,5	100	142	263	408	486,5	330	620	150	320	-	310	275	137,5	4×17
	2,2	39	26	94	40	25	55	239,5	165	829,5	100	142	263	408	486,5	338	620	150	320	-	310	275	137,5	4×17
25/2	2,2	48	23	115	40	25	100	239,5	165	874,5	100	142	263	408	531,5	338	700	150	400	-	310	275	137,5	4×17
	3	48	26	118	40	25	100	239,5	165	929,5	100	142	263	420	531,5	393	700	150	400	-	310	275	137,5	4×17
	4	48	35	119	40	25	100	239,5	165	909,5	100	142	263	420	531,5	373	700	150	400	-	310	275	137,5	4×17
	5,5	48	43	125	40	25	100	239,5	165	926,5	100	142	263	440	531,5	390	700	150	400	-	310	275	137,5	4×17
25/3	4	57	35	112	40	25	145	239,5	165	974,5	100	142	263	420	576,5	393	740	150	440	-	310	275	137,5	4×17
	5,5	57	66	135	40	25	145	239,5	165	971,5	100	142	263	460	576,5	390	740	150	440	-	310	275	137,5	4×17
	7,5	57	73	151	40	25	145	239,5	165	1041,5	100	142	283	480	576,5	460	820	150	520	-	320	280	140	4×19
25/4	7,5	66	73	185	40	25	190	239,5	165	1086,5	100	142	283	480	621,5	460	880	150	590	-	320	280	140	4×19
	11	66	120	232	40	25	190	239,5	165	1122,5	100	142	283	480	621,5	496	880	150	580	-	320	280	140	4×19
25/5	11	75	120	246	40	25	235	239,5	165	1167,5	100	142	283	480	666,5	496	920	150	620	-	320	280	140	4×19
25/6	11	84	120	260	40	25	280	239,5	165	1212,5	100	142	283	480	711,5	496	960	150	660	-	320	280	140	4×19
	15	84	132	272	40	25	280	239,5	165	1331,5	100	142	318	573	711,5	615	1100	150	800	-	400	360	180	4×19
25/7	15	93	132	292	40	25	325	239,5	165	1376,5	100	142	318	573	756,5	615	1140	150	840	-	400	360	180	4×19
	18,5	93	150	307	40	25	325	239,5	165	1471,5	100	142	318	570	756,5	710	1140	150	840	-	400	360	180	4×19
25/8	15	102	132	302	40	25	370	239,5	165	1421,5	100	142	318	573	801,5	615	1180	150	880	-	400	360	180	4×19
	18,5	102	150	317	40	25	370	239,5	165	1516,5	100	142	318	570	801,5	710	1180	150	880	-	400	360	180	4×19
25/9	18,5	111	150	328	40	25	415	239,5	165	1561,5	100	142	318	570	846,5	710	1220	150	920	-	400	360	180	4×19
	22	111	205	362	40	25	415	239,5	165	1581,5	100	142	318	588	846,5	730	1300	150	1000	-	420	380	190	4×19
25/10	18,5	120	150	339	40	25	460	239,5	165	1606,5	100	142	318	570	891,5	710	1280	150	980	-	400	360	180	4×19
	22	120	205	373	40	25	460	239,5	165	1626,5	100	142	318	588	891,5	730	1340	150	1040	-	420	380	190	4×19
25/11	22	129	205	384	40	25	505	239,5	165	1671,5	100	142	318	588	936,5	730	1380	150	1080	-	420	380	190	4×19
	30	129	250	447	40	25	505	239,5	165	1712,5	100	142	338	641	936,5	771	1420	150	1120	-	480	440	220	4×19
25/12	22	138	205	395	40	25	550	239,5	165	1716,5	100	142	318	588	981,5	730	1440	150	1140	-	420	380	190	4×19
	30	138	250	458	40	25	550	239,5	165	1757,5	100	142	338	641	981,5	771	1460	150	1160	-	480	440	220	4×19
25/13	30	147	250	481	40	25	595	239,5	165	1802,5	100	142	358	661	1026,5	771	1520	150	1220	610	480	440	220	6×21
25/14	30	156	250	493	40	25	640	239,5	165	1847,5	100	142	358	661	1071,5	771	1560	150	1260	630	480	440	220	6×21
25/15	30	165	250	505	40	25	685	239,5	165	1892,5	100	142	358	661	1116,5	771	1600	150	1300	650	480	440	220	6×21
	37	165	270	531	40	25	685	239,5	165	1892,5	100	142	358	661	1116,5	771	1600	150	1300	650	480	440	220	6×21
25/16	30	174	250	517	40	25	730	239,5	165	1937,5	100	142	358	661	1161,5	771	1660	150	1360	680	480	440	220	6×21
	37	174	270	543	40	25	730	239,5	165	1937,5	100	142	358	661	1161,5	771	1660	150	1360	680	480	440	220	6×21
25/17	37	183	270	555	40	25	775	239,5	165	1982,5	100	142	358	661	1206,5	771	1700	150	1400	700	480	440	220	6×21
25/18	37	192	270	567	40	25	820	239,5	165	2027,5	100	142	358	661	1251,5	771	1740	150	1440	720	480	440	220	6×21
	45	192	315	649	40	25	820	239,5	165	2106,5	100	142	383	695	1251,5	850	1760	150	1460	730	520	480	240	6×21
25/19	37	201	270	578	40	25	865	239,5	165	2072,5	100	142	358	661	1296,5	771	1780	150	1480	740	480	440	220	6×21
	45	201	315	663	40	25	865	239,5	165	2151,5	100	142	383	695	1296,5	850	1820	150	1520	760	520	480	240	6×21
25/20	37	210	270	590	40	25	910	239,5	165	2117,5	100	142	358	661	1341,5	771	1840	150	1540	770	480	440	220	6×21
	45	210	315	676	40	25	910	239,5	165	2196,5	100	142	383	695	1341,5	850	1860	150	1560	780	520	480	240	6×21

HP 32

2.950 rpm - Grease lubrication

HP model	DIMENSIONS (mm)																							
	kW	kg P.	kg M.	kg Tot.	Dn_1	Dn_2	a	f	h_2	L	g_1	g_2	h_1	h_3	l_1	l_2	m	m_1	m_2	m_3	n	n_1	n_2	s
32/1	2,2	72	26	145	50	32	70	300	200	1030	90	237	303	448	667	358	740	150	440	-	320	280	140	4×19
	3	72	26	154	50	32	70	300	200	1065	90	237	303	460	667	393	740	150	440	-	320	280	140	4×19
	4	72	35	162	50	32	70	300	200	1082	90	237	303	480	667	410	740	150	440	-	320	280	140	4×19
	5,5	72	43	185	50	32	70	300	200	1082	90	237	303	480	667	410	740	150	440	-	320	280	140	4×19
	7,5	72	73	192	50	32	70	300	200	1152	90	237	303	500	667	480	820	150	520	-	320	280	140	4×19
32/2	4	87	35	156	50	32	125	300	200	1137	90	237	303	480	722	410	880	150	580	-	320	280	140	4×19
	5,5	87	43	179	50	32	125	300	200	1137	90	237	303	480	722	410	880	150	580	-	320	280	140	4×19
	7,5	87	73	186	50	32	125	300	200	1207	90	237	303	500	722	480	880	150	580	-	320	280	140	4×19
	11	87	120	269	50	32	125	300	200	1342	90	237	303	558	722	615	1000	150	700	-	360	320	160	4×19
	15	87	132	269	50	32	125	300	200	1342	90	237	303	558	722	615	1000	150	700	-	360	320	160	4×19
32/3	11	102	120	280	50	32	180	300	200	1397	90	237	323	558	777	615	1060	150	760	-	360	320	160	4×19
	15	102	132	292	50	32	180	300	200	1397	90	237	323	558	777	615	1060	150	760	-	360	320	160	4×19
	18,5	102	150	310	50	32	180	300	200	1492	90	237	323	575	777	710	1060	150	760	-	360	320	160	4×19
	22	102	205	346	50	32	180	300	200	1512	90	237	323	593	777	730	1140	150	840	-	440	400	200	4×19
32/4	15	117	132	290	50	32	235	300	200	1452	90	237	323	558	832	615	1180	150	880	-	440	400	200	4×19
	18,5	117	150	308	50	32	235	300	200	1547	90	237	323	575	832	710	1180	150	880	-	440	400	200	4×19
	22	117	205	363	50	32	235	300	200	1567	90	237	323	593	832	730	1180	150	880	-	440	400	200	4×19
	30	117	250	423	50	32	235	300	200	1608	90	237	338	641	832	771	1220	150	920	-	480	440	220	4×19
32/5	18,5	132	150	341	50	32	290	300	200	1602	90	237	338	575	887	710	1280	150	980	-	480	440	220	4×19
	22	132	205	396	50	32	290	300	200	1622	90	237	338	593	887	730	1280	150	980	-	480	440	220	4×19
	30	132	250	441	50	32	290	300	200	1663	90	237	338	641	887	771	1280	150	980	-	480	440	220	4×19
	37	132	270	467	50	32	290	300	200	1663	90	237	338	641	887	771	1280	150	980	-	480	440	220	4×19
32/6	30	147	250	465	50	32	345	300	200	1718	90	237	338	641	942	771	1340	150	1040	-	480	440	220	4×19
	37	147	270	485	50	32	345	300	200	1718	90	237	338	641	942	771	1340	150	1040	-	480	440	220	4×19
	45	147	315	569	50	32	345	300	200	1767	90	237	363	675	942	820	1360	150	1060	-	510	470	235	4×19
32/7	30	162	250	483	50	32	400	300	200	1773	90	237	338	641	997	771	1400	150	1100	-	480	440	220	4×19
	37	162	270	503	50	32	400	300	200	1773	90	237	338	641	997	771	1400	150	1100	-	480	440	220	4×19
	45	162	315	586	50	32	400	300	200	1822	90	237	363	641	997	820	1420	150	1120	-	510	470	235	4×19
	55	162	420	675	50	32	400	300	200	1912	90	237	393	748	997	910	1500	150	1200	-	560	520	260	4×19
32/8	37	177	270	559	50	32	455	300	200	1828	90	237	363	641	1052	771	1480	150	1180	-	510	470	235	4×19
	45	177	315	604	50	32	455	300	200	1877	90	237	363	641	1052	820	1480	150	1180	-	510	470	235	4×19
	55	177	420	707	50	32	455	300	200	1967	90	237	413	748	1052	910	1560	150	1260	630	580	530	265	6×21
32/9	45	192	315	621	50	32	510	300	200	1932	90	237	413	641	1107	820	1620	150	1320	660	580	530	265	6×21
	55	192	420	726	50	32	510	300	200	2022	90	237	413	748	1107	910	1620	150	1320	660	580	530	265	6×21
	75	192	551	896	50	32	510	300	200	2097	90	237	443	841	1107	985	1720	150	1420	710	640	590	295	6×21
32/10	45	207	315	640	50	32	565	300	200	2077	90	237	413	641	1162	910	1680	150	1380	690	580	530	265	6×21
	55	207	420	745	50	32	565	300	200	2077	90	237	413	748	1162	910	1680	150	1380	690	580	530	265	6×21
	75	207	551	915	50	32	565	300	200	2152	90	237	443	841	1162	985	1780	150	1480	740	640	590	295	6×21
32/11	45	222	315	697	50	32	620	300	200	2132	90	237	443	641	1217	910	1820	150	1520	760	640	590	295	6×21
	55	222	420	802	50	32	620	300	200	2132	90	237	443	748	1217	910	1820	150	1520	760	640	590	295	6×21
	75	222	551	933	50	32	620	300	200	2207	90	237	443	841	1217	985	1820	150	1520	760	640	590	295	6×21
32/12	55	237	420	821	50	32	675	300	200	2187	90	237	443	748	1272	910	1880	150	1580	790	640	590	295	6×21
	75	237	551	952	50	32	675	300	200	2262	90	237	443	841	1272	985	1880	150	1580	790	640	590	295	6×21
	90	237	625	1002	50	32	675	300	200	2312	90	237	443	841	1272	1035	1880	150	1580	790	640	590	295	6×21
32/13	55	252	420	840	50	32	730	300	200	2242	90	237	443	748	1327	910	1940	150	1640	820	640	590	295	6×21
	75	252	551	971	50	32	730	300	200	2317	90	237	443	841	1327	985	1940	150	1640	820	640	590	295	6×21
	90	252	625	1021	50	32	730	300	200	2367	90	237	443	841	1327	1035	1940	150	1640	820	640	590	295	6×21
32/14	75	267	551	990	50	32	785	300	200	2372	90	237	443	841	1382	985	2000	150	1700	850	640	590	295	6×21
	90	267	625	1040	50	32	785	300	200	2422	90	237	502	841	1382	1035	2000	150	1700	850	640	590	295	6×21
	110	267	968	1338	50	32	785	300	200	2547	90	237	502	1032	1382	1160	2120	150	1820	910	710	660	330	6×21
32/15	75	282	551	1004	50	32	840	300	200	2427	90	237	463	841	1437	985	2060	150	1760	880	650	600	300	6×21
	90	282	625	1078	50	32	840	300	200	2477	90	237	463	861	1437	1035	2060	150	1760	880	650	600	300	6×21
	110	282	968	1408	50	32	840	300	200	2602	90	237	502	1032	1437	1160	2160	150	1860	930	710	660	330	6×21
32/16	75	297	551	1022	50	32	895	300	200	2482	90	237	463	841	1492	985	2100	150	1800	900	650	600	300	6×21
	90	297	625	1096	50	32	895	300	200	2532	90	237	463	861	1492	1035	2100	150	1800	900	650	600	300	6×21
	110	297	968	1427	50	32	895	300	200	2657	90	237	502	1032	1492	1160	2220	150	1920	960	710	660	330	6×21
32/17	90	312	625	1115	50	32	950	300	200	2587	90	237	463	861	1547	1035	2160	150	1860	930	650	600	300	6×21
	110	312	968	1447	50	32	950	300	200	2712	90	237	502	1032	1547	1160	2280	150	1980	990	710	660	330	6×21
	132	312	1100	1567	50	32	950	300	200	2742	90	237	502	1032	1547	1190	2280	150	1980	990	710	660	330	6×21
32/18	90	327	625	1134	50	32	1005	300	200	2642	90	237	463	861	1602	1035	2220	150	1920	960	650	600	300	6×21
	110	327	968	1467	50	32	1005	300	200	2767	90	237	502	1032	1602	1160	2340	150	2040	1020	710	660	330	6×21
	132	327	1100	1527	50	32	1005	300	200	2797	90	237	502	1032	1602	1190	2340	150	2040	1020	710	660	330	6×21
32/19	90	342	625	1143	50	32	1060	300	200	2697	90	237	502	861	1657	1035	2400	150	2100	1050	710	660	330	6×21
	110	342	968	1486	50	32	1060	300	200	2822	90	237	502	1032	1657	1160	2400	150	2100	1050	710	660	330	6×21
	132	342	1100	1606	50	32	1060	300	200	2852	90	237	502	1032	1657	1190	2400	150	2100	1050	710	660	330	6×21
32/20	110	357	968	1506	50	32	1115	300	200	2877	90	237	502	1052	1712	1160	2440	150	2140	1070	710	660	330	6×21
	132	357	1100	1626	50	32	1115	300	200	2907	90	237	502	1052	1712	1190	2400	150	2140	1070	710	660	330	6×21
	160	357	1161	1681	50	32	1115	300	200	3037	90	237	502	1052	1712	1320	2400	150	2140	1070	710	660	330	6×21

HP model	DIMENSIONS (mm)																							
	kW	kg P.	kg M.	kg Tot.	Dn_1	Dn_2	a	f	h_2	L	g_1	g_2	h_1	h_3	l_1	l_2	m	m_1	m_2	m_3	n	n_1	n_2	s
50/1	5,5	99	43	249	80	50	90	340	225	1168	90	263	338	455	753	410	1020	150	720	-	440	400	200	4×19
	7,5	99	73	256	80	50	90	340	225	1238	90	263	338	535	753	480	1020	150	720	-	440	400	200	4×19
	11	99	120	293	80	50	90	340	225	1373	90	263	338	593	753	615	1020	150	720	-	440	400	200	4×19
	15	99	132	303	80	50	90	340	225	1373	90	263	338	593	753	615	1020	150	720	-	440	400	200	4×19
	18,5	99	150	318	80	50	90	340	225	1468	90	263	338	590	753	710	1020	150	720	-	440	400	200	4×19
50/2	11	118	120	278	80	50	152	340	225	1435	90	263	338	593	815	615	1140	150	840	-	440	400	200	4×19
	15	118	132	288	80	50	152	340	225	1435	90	263	338	593	815	615	1140	150	840	-	440	400	200	4×19
	18,5	118	150	303	80	50	152	340	225	1530	90	263	338	590	815	710	1140	150	840	-	440	400	200	4×19
	22	118	205	373	80	50	152	340	225	1550	90	263	338	608	815	730	1140	150	840	-	440	400	200	4×19
	30	118	250	419	80	50	152	340	225	1591	90	263	338	641	815	771	1180	150	880	-	480	440	220	4×19
	37	118	270	445	80	50	152	340	225	1591	90	263	338	641	815	771	1180	150	880	-	480	440	220	4×19
50/3	22	137	205	376	80	50	214	340	225	1612	90	263	338	608	877	730	1240	150	940	-	480	440	220	4×19
	30	137	250	421	80	50	214	340	225	1653	90	263	338	641	877	771	1240	150	940	-	480	440	220	4×19
	37	137	270	466	80	50	214	340	225	1653	90	263	338	641	877	771	1240	150	940	-	480	440	220	4×19
	45	137	315	558	80	50	214	340	225	1702	90	263	368	680	877	820	1280	150	980	-	520	480	240	4×19
50/4	30	156	250	502	80	50	276	340	225	1715	90	263	368	671	939	771	1340	150	1040	-	520	480	240	4×19
	37	156	270	522	80	50	276	340	225	1715	90	263	368	671	939	771	1340	150	1040	-	520	480	240	4×19
	45	156	315	567	80	50	276	340	225	1764	90	263	368	680	939	820	1340	150	1040	-	520	480	240	4×19
	55	156	420	672	80	50	276	340	225	1764	90	263	368	680	939	820	1340	150	1040	-	520	480	240	4×19
	75	156	551	803	80	50	276	340	225	1854	90	263	408	783	939	910	1420	150	1120	-	560	520	260	4×19
	90	156	625	877	80	50	276	340	225	1929	90	263	448	846	939	985	1520	150	1220	610	640	600	300	6×21
50/5	37	175	270	549	80	50	338	340	225	1777	90	263	408	711	1001	771	1480	150	1180	-	560	520	260	4×19
	45	175	315	594	80	50	338	340	225	1826	90	263	408	720	1001	820	1480	150	1180	-	560	520	260	4×19
	55	175	420	699	80	50	338	340	225	1916	90	263	408	783	1001	910	1480	150	1180	-	560	520	260	4×19
	75	175	551	875	80	50	338	340	225	1991	90	263	448	846	1001	985	1580	150	1280	640	640	600	300	6×21
	90	175	625	925	80	50	338	340	225	2041	90	263	448	846	1001	1035	1580	150	1280	640	640	600	300	6×21
50/6	45	194	315	662	80	50	400	340	225	1888	90	263	448	760	1063	820	1640	150	1340	670	640	600	300	6×21
	55	194	420	767	80	50	400	340	225	1978	90	263	448	803	1063	910	1640	150	1340	670	640	600	300	6×21
	75	194	551	898	80	50	400	340	225	2053	90	263	448	846	1063	985	1640	150	1340	670	640	600	300	6×21
	90	194	625	948	80	50	400	340	225	2103	90	263	448	846	1063	1035	1640	150	1340	670	640	600	300	6×21
	110	194	968	1275	80	50	400	340	225	2228	90	263	448	1018	1063	1160	1780	150	1480	740	680	640	320	6×21
50/7	55	213	420	790	80	50	462	340	225	2040	90	263	448	803	1125	910	1700	150	1400	700	640	600	300	6×21
	75	213	551	921	80	50	462	340	225	2115	90	263	448	846	1125	985	1700	150	1400	700	640	600	300	6×21
	90	213	625	971	80	50	462	340	225	2165	90	263	448	846	1125	1035	1700	150	1400	700	640	600	300	6×21
	110	213	968	1298	80	50	462	340	225	2290	90	263	448	1018	1125	1160	1840	150	1540	770	680	640	320	6×21
50/8	75	232	551	920	80	50	524	340	225	2177	90	263	448	846	1187	985	1760	150	1460	730	640	600	300	6×21
	90	232	625	994	80	50	524	340	225	2227	90	263	448	846	1187	1035	1760	150	1460	730	640	600	300	6×21
	110	232	968	1321	80	50	524	340	225	2352	90	263	448	1038	1187	1160	1900	150	1600	800	680	640	320	6×21
	132	232	1100	1441	80	50	524	340	225	2382	90	263	448	1038	1187	1190	1900	150	1600	800	680	640	320	6×21
50/9	75	251	551	943	80	50	586	340	225	2239	90	263	448	846	1249	985	1820	150	1520	760	640	600	300	6×21
	90	251	625	1017	80	50	586	340	225	2289	90	263	448	846	1249	1035	1820	150	1520	760	640	600	300	6×21
	110	251	968	1344	80	50	586	340	225	2414	90	263	488	1038	1249	1160	1960	150	1660	830	680	640	320	6×21
	132	251	1100	1464	80	50	586	340	225	2444	90	263	488	1038	1249	1190	1960	150	1660	830	680	640	320	6×21
	160	251	1161	1519	80	50	586	340	225	2574	90	263	488	1038	1249	1320	1960	150	1660	830	680	640	320	6×21
50/10	90	270	625	1047	80	50	648	340	225	2351	90	263	508	906	1311	1035	2020	150	1720	860	700	660	330	6×21
	110	270	968	1390	80	50	648	340	225	2476	90	263	508	1038	1311	1160	2020	150	1720	860	700	660	330	6×21
	132	270	1100	1510	80	50	648	340	225	2506	90	263	508	1038	1311	1190	2020	150	1720	860	700	660	330	6×21
	160	270	1161	1565	80	50	648	340	225	2636	90	263	508	1038	1311	1320	2020	150	1720	860	700	660	330	6×21
50/11	90	289	625	1071	80	50	710	340	225	2413	90	263	508	906	1373	1035	2100	150	1800	900	700	660	330	6×21
	110	289	968	1414	80	50	710	340	225	2538	90	263	508	1038	1373	1160	2100	150	1800	900	700	660	330	6×21
	132	289	1100	1534	80	50	710	340	225	2568	90	263	508	1038	1373	1190	2100	150	1800	900	700	660	330	6×21
	160	289	1161	1589	80	50	710	340	225	2698	90	263	508	1038	1373	1320	2100	150	1800	900	700	660	330	6×21
	200	289	1221	1644	80	50	710	340	225	2698	90	263	508	1038	1373	1320	2100	150	1800	900	700	660	330	6×21

HP 50

2.950 rpm - Grease lubrication

HP model	DIMENSIONS (mm)																							
	kW	kg P.	kg M.	kg Tot.	Dn_1	Dn_2	a	f	h_2	L	g_1	g_2	h_1	h_3	l_1	l_2	m	m_1	m_2	m_3	n	n_1	n_2	s
50/12	110	308	968	1426	80	50	772	340	225	2600	90	263	508	1038	1435	1160	2160	150	1860	930	700	660	330	6×21
	132	308	1100	1558	80	50	772	340	225	2630	90	263	508	1038	1435	1190	2160	150	1860	930	700	660	330	6×21
	160	308	1161	1613	80	50	772	340	225	2760	90	263	508	1038	1435	1320	2160	150	1860	930	700	660	330	6×21
	200	308	1221	1668	80	50	772	340	225	2760	90	263	508	1038	1435	1320	2160	150	1860	930	700	660	330	6×21
50/13	110	327	968	1450	80	50	834	340	225	2662	90	263	508	1038	1497	1160	2220	150	1920	960	700	660	330	6×21
	132	327	1100	1582	80	50	834	340	225	2692	90	263	508	1038	1497	1190	2220	150	1920	960	700	660	330	6×21
	160	327	1161	1637	80	50	834	340	225	2822	90	263	508	1038	1497	1320	2220	150	1920	960	700	660	330	6×21
	200	327	1221	1692	80	50	834	340	225	2822	90	263	508	1038	1497	1320	2220	150	1920	960	700	660	330	6×21
	250	327	2090	2582	80	50	834	340	225	3002	90	263	542	1197	1497	1500	2400	150	2100	1050	800	760	380	6×21
50/14	132	346	1100	1600	80	50	896	340	225	2754	90	263	508	1038	1559	1190	2280	150	1980	990	700	660	330	6×21
	160	346	1161	1661	80	50	896	340	225	2884	90	263	508	1038	1559	1320	2280	150	1980	990	700	660	330	6×21
	200	346	1221	1716	80	50	896	340	225	2884	90	263	508	1038	1559	1320	2280	150	1980	990	700	660	330	6×21
	250	346	2090	2540	80	50	896	340	225	3064	90	263	542	1217	1559	1500	2460	150	2160	1080	800	760	380	6×21
50/15	132	365	1100	1623	80	50	958	340	225	2816	90	263	508	1038	1621	1190	2340	150	2040	1020	700	660	330	6×21
	160	365	1161	1684	80	50	958	340	225	2946	90	263	508	1038	1621	1320	2340	150	2040	1020	700	660	330	6×21
	200	365	1221	1739	80	50	958	340	225	2946	90	263	508	1038	1621	1320	2340	150	2040	1020	700	660	330	6×21
	250	365	2090	2591	80	50	958	340	225	3126	90	263	562	1217	1621	1500	2520	150	2220	1110	820	780	390	8×21
50/16	160	384	1161	1708	80	50	1020	340	225	3008	90	263	508	1058	1683	1320	2400	150	2100	1050	700	660	330	6×21
	200	384	1221	1763	80	50	1020	340	225	3008	90	263	508	1058	1683	1320	2400	150	2100	1050	700	660	330	6×21
	250	384	2090	2615	80	50	1020	340	225	3188	90	263	562	1217	1683	1500	2580	150	2280	1140	820	780	390	8×21
50/17	160	403	1161	1727	80	50	1082	340	225	3070	90	263	508	1058	1745	1320	2460	150	2160	1080	700	660	330	6×21
	200	403	1221	1787	80	50	1082	340	225	3070	90	263	508	1058	1745	1320	2460	150	2160	1080	700	660	330	6×21
	250	403	2090	2639	80	50	1082	340	225	3250	90	263	562	1217	1745	1500	2640	150	2340	1170	820	780	390	8×21

HP model	DIMENSIONS (mm)																							
	kW	kg P.	kg M.	kg Tot.	Dn_1	Dn_2	a	f	h_2	L	g_1	g_2	h_1	h_3	l_1	l_2	m	m_1	m_2	m_3	n	n_1	n_2	s
80/1	11	137	120	356	125	80	120	360	250	1444	80	274	363	618	824	615	1180	150	880	-	480	440	220	4×19
	15	137	132	366	125	80	120	360	250	1444	80	274	363	618	824	615	1180	150	880	-	480	440	220	4×19
	18,5	137	150	381	125	80	120	360	250	1539	80	274	363	615	824	710	1180	150	880	-	480	440	220	4×19
	22	137	205	451	125	80	120	360	250	1444	80	274	363	633	824	615	1180	150	880	-	480	440	220	4×19
	30	137	250	496	125	80	120	360	250	1600	80	274	363	666	824	771	1180	150	880	-	480	440	220	4×19
80/2	22	196	205	484	125	80	195	360	250	1519	80	274	393	663	899	615	1380	150	1080	-	580	540	270	4×19
	30	196	250	529	125	80	195	360	250	1675	80	274	393	696	899	771	1380	150	1080	-	580	540	270	4×19
	37	196	270	549	125	80	195	360	250	1675	80	274	393	696	899	771	1380	150	1080	-	580	540	270	4×19
	45	196	315	594	125	80	195	360	250	1724	80	274	393	705	899	820	1380	150	1080	-	580	540	270	4×19
	55	196	420	699	125	80	195	360	250	1814	80	274	393	748	899	910	1380	150	1080	-	580	540	270	4×19
	75	196	551	879	125	80	195	360	250	1889	80	274	433	851	899	985	1480	150	1180	-	640	600	300	4×19
80/3	45	225	315	691	125	80	270	360	250	1799	80	274	453	765	974	820	1560	150	1260	630	640	600	300	6×21
	55	225	420	796	125	80	270	360	250	1889	80	274	453	765	974	910	1560	150	1260	630	640	600	300	6×21
	75	225	551	927	125	80	270	360	250	1964	80	274	453	851	974	985	1560	150	1260	630	640	600	300	6×21
	90	225	625	977	125	80	270	360	250	2014	80	274	453	851	974	1035	1560	150	1260	630	640	600	300	6×21
80/4	75	252	551	923	125	80	345	360	250	2039	80	274	493	848	1049	985	1760	150	1460	730	700	660	330	6×21
	90	252	625	997	125	80	345	360	250	2089	80	274	493	891	1049	1035	1760	150	1460	730	700	660	330	6×21
	110	252	968	1340	125	80	345	360	250	2214	80	274	493	1023	1049	1160	1760	150	1460	730	700	660	330	6×21
	132	252	1100	1460	125	80	345	360	250	2244	80	274	493	1023	1049	1190	1760	150	1460	730	700	660	330	6×21
80/5	90	281	625	1017	125	80	420	360	250	2164	80	274	493	891	1124	1035	1840	150	1540	770	700	660	330	6×21
	110	281	968	1360	125	80	420	360	250	2289	80	274	493	1023	1124	1160	1840	150	1540	770	700	660	330	6×21
	132	281	1100	1492	125	80	420	360	250	2319	80	274	493	1023	1124	1190	1840	150	1540	770	700	660	330	6×21
	160	281	1161	1547	125	80	420	360	250	2449	80	274	493	1023	1124	1320	1840	150	1540	770	700	660	330	6×21
80/6	110	310	968	1388	125	80	495	360	250	2294	80	274	493	1023	1129	1160	1920	150	1620	810	700	660	330	6×21
	132	310	1100	1520	125	80	495	360	250	2324	80	274	493	1023	1129	1190	1920	150	1620	810	700	660	330	6×21
	160	310	1161	1581	125	80	495	360	250	2454	80	274	493	1043	1129	1320	1920	150	1620	810	700	660	330	6×21
	200	310	1221	1636	125	80	495	360	250	2454	80	274	493	1043	1129	1320	1920	150	1620	810	700	660	330	6×21
80/7	132	339	1100	1549	125	80	570	360	250	2469	80	274	493	1023	1274	1190	2000	150	1700	850	700	660	330	6×21
	160	339	1161	1610	125	80	570	360	250	2599	80	274	493	1043	1274	1320	2000	150	1700	850	700	660	330	6×21
	200	339	1221	1670	125	80	570	360	250	2599	80	274	493	1043	1274	1320	2000	150	1700	850	700	660	330	6×21
	250	339	2090	2524	125	80	570	360	250	2779	80	274	553	1208	1274	1500	2160	150	1860	930	820	780	390	6×21
80/8	160	369	1161	1668	125	80	645	360	250	2674	80	274	513	1043	1349	1320	2060	150	1760	880	700	660	330	6×21
	200	369	1221	1728	125	80	645	360	250	2674	80	274	513	1043	1349	1320	2060	150	1760	880	700	660	330	6×21
	250	369	2090	2561	125	80	645	360	250	2854	80	274	553	1208	1349	1500	2240	150	1940	970	820	780	390	6×21
80/9	200	398	1221	1794	125	80	720	360	250	2749	80	274	553	1043	1424	1320	2320	150	2020	1010	820	780	390	6×21
	250	398	2090	2663	125	80	720	360	250	2929	80	274	553	1208	1424	1500	2320	150	2020	1010	820	780	390	6×21
	315	398	2530	3103	125	80	720	360	250	2929	80	274	553	1208	1424	1500	2320	150	2020	1010	820	780	390	6×21
80/10	200	427	1221	1830	125	80	795	360	250	2824	80	274	553	1043	1499	1320	2400	150	2100	1050	820	780	390	6×21
	250	427	2090	2699	125	80	795	360	250	3004	80	274	553	1208	1499	1500	2400	150	2100	1050	820	780	390	6×21
	315	427	2530	3139	125	80	795	360	250	3004	80	274	553	1208	1499	1500	2400	150	2100	1050	820	780	390	6×21
80/11	250	456	2090	2735	125	80	870	360	250	3079	80	274	553	1208	1574	1500	2460	150	2160	1080	820	780	390	6×21
	315	456	2530	3175	125	80	870	360	250	3079	80	274	553	1228	1574	1500	2460	150	2160	1080	820	780	390	6×21
	355	456	2000	2645	125	80	870	360	250	2988	80	274	553	1151	1574	1409	2460	150	2160	1080	820	780	390	6×21
80/12	250	485	2090	2771	125	80	945	360	250	3154	80	274	573	1208	1649	1500	2550	150	2250	1125	840	800	400	8×21
	315	485	2530	3211	125	80	945	360	250	3154	80	274	573	1228	1649	1500	2550	150	2250	1125	840	800	400	8×21
	355	485	2000	2681	125	80	945	360	250	3063	80	274	573	1151	1649	1409	2550	150	2250	1125	840	800	400	8×21
80/13	315	515	2530	3251	125	80	1020	360	250	3229	80	274	573	1228	1724	1500	2610	150	2310	1155	840	800	400	8×21
	355	515	2000	2731	125	80	1020	360	250	3519	80	274	573	1151	1724	1790	2610	150	2310	1155	840	800	400	8×21

HP 100

2.950 rpm - Grease lubrication

HP model	DIMENSIONS (mm)																							
	kW	kg P.	kg M.	kg Tot.	Dn_1	Dn_2	a	f	h_2	L	g_1	g_2	h_1	h_3	l_1	l_2	m	m_1	m_2	m_3	n	n_1	n_2	s
100/1	22	241	205	531	150	100	145	410	315	1548	70	293	393	663	928	615	1400	150	1100	-	600	560	280	4×19
	30	241	250	576	150	100	145	410	315	1704	70	293	393	696	928	771	1400	150	1100	-	600	560	280	4×19
	37	241	270	596	150	100	145	410	315	1704	70	293	393	696	928	771	1400	150	1100	-	600	560	280	4×19
	45	241	315	641	150	100	145	410	315	1753	70	293	393	705	928	820	1400	150	1100	-	600	560	280	4×19
	55	241	420	746	150	100	145	410	315	1843	70	293	393	748	928	910	1400	150	1100	-	600	560	280	4×19
	75	241	551	912	150	100	145	410	315	1918	70	293	423	841	928	985	1480	150	1180	-	640	600	300	4×19
100/2	55	286	420	851	150	100	235	410	315	1843	70	293	503	815	1018	820	1720	150	1420	710	740	700	350	6×21
	75	286	551	982	150	100	235	410	315	1933	70	293	503	858	1018	910	1720	150	1420	710	740	700	350	6×21
	90	286	625	1056	150	100	235	410	315	2008	70	293	503	901	1018	985	1720	150	1420	710	740	700	350	6×21
	110	286	968	1399	150	100	235	410	315	2183	70	293	503	1033	1018	1160	1720	150	1420	710	740	700	350	6×21
	132	286	1100	1519	150	100	235	410	315	2213	70	293	503	1033	1018	1190	1720	150	1420	710	740	700	350	6×21
100/3	90	331	625	1092	150	100	325	410	315	2098	70	293	503	901	1108	985	1800	150	1500	750	740	700	350	6×21
	110	331	968	1435	150	100	325	410	315	2273	70	293	503	1033	1108	1160	1800	150	1500	750	740	700	350	6×21
	132	331	1100	1567	150	100	325	410	315	2303	70	293	503	1033	1108	1190	1800	150	1500	750	740	700	350	6×21
	160	331	1161	1628	150	100	325	410	315	2433	70	293	503	1033	1108	1320	1800	150	1500	750	740	700	350	6×21
	200	331	1221	1683	150	100	325	410	315	2433	70	293	503	1033	1108	1320	1800	150	1500	750	740	700	350	6×21
100/4	160	376	1161	1678	150	100	415	410	315	2523	70	293	503	1033	1198	1320	1900	150	1600	800	740	700	350	6×21
	200	376	1221	1738	150	100	415	410	315	2523	70	293	503	1033	1198	1320	1900	150	1600	800	740	700	350	6×21
	250	376	2090	2576	150	100	415	410	315	2703	70	293	563	1218	1198	1500	2080	150	1780	890	820	780	390	6×21
100/5	160	421	1161	1806	150	100	505	410	315	2613	70	293	563	1093	1288	1320	2160	150	1860	930	820	780	390	6×21
	200	421	1221	1866	150	100	505	410	315	2613	70	293	563	1093	1288	1320	2160	150	1860	930	820	780	390	6×21
	250	421	2090	2735	150	100	505	410	315	2793	70	293	563	1218	1288	1500	2160	150	1860	930	820	780	390	6×21
	315	421	2530	3175	150	100	505	410	315	2793	70	293	563	1218	1288	1500	2160	150	1860	930	820	780	390	6×21
100/6	250	466	2090	2805	150	100	595	410	315	2883	70	293	563	1218	1378	1500	2260	150	1960	980	820	780	390	6×21
	315	466	2530	3245	150	100	595	410	315	2883	70	293	563	1218	1378	1500	2260	150	1960	980	820	780	390	6×21
	355	466	2000	2715	150	100	595	410	315	3173	70	293	563	1167	1378	1790	2260	150	1960	980	820	780	390	6×21
	400	466	2300	3015	150	100	595	410	315	3313	70	293	563	1167	1378	1930	2260	150	1960	980	820	780	390	6×21
100/7	315	511	2530	3305	150	100	685	410	315	2973	70	293	563	1218	1468	1500	2340	150	2040	1020	820	780	390	6×21
	355	511	2000	2775	150	100	685	410	315	3263	70	293	563	1167	1468	1790	2340	150	2040	1020	820	780	390	6×21
	400	511	2300	3075	150	100	685	410	315	3403	70	293	563	1167	1468	1930	2340	150	2040	1020	820	780	390	6×21
	450	511	2400	3175	150	100	685	410	315	3403	70	293	563	1167	1468	1930	2340	150	2040	1020	820	780	390	6×21
100/8	315	556	2530	3375	150	100	775	410	315	3063	70	293	563	1218	1558	1500	2440	150	2140	1070	820	780	390	6×21
	355	556	2000	2845	150	100	775	410	315	3353	70	293	563	1138	1558	1790	2440	150	2140	1070	820	780	390	6×21
	400	556	2300	3145	150	100	775	410	315	3493	70	293	563	1138	1558	1930	2440	150	2140	1070	820	780	390	6×21
	450	556	2400	3245	150	100	775	410	315	3493	70	293	563	1138	1558	1930	2440	150	2140	1070	820	780	390	6×21
	500	556	2550	3395	150	100	775	410	315	3493	70	293	563	1173	1558	1930	2440	150	2140	1070	820	780	390	6×21
100/9	355	601	2000	2904	150	100	865	410	315	3443	70	293	583	1158	1648	1790	2520	150	2220	740	820	780	390	8×21
	400	601	2300	3204	150	100	865	410	315	3583	70	293	583	1158	1648	1930	2520	150	2220	740	820	780	390	8×21
	450	601	2400	3304	150	100	865	410	315	3583	70	293	583	1158	1648	1930	2520	150	2220	740	820	780	390	8×21
	500	601	2550	3454	150	100	865	410	315	3583	70	293	583	1193	1648	1930	2520	150	2200	740	820	780	390	8×21
100/10	400	646	2300	3274	150	100	955	410	315	3673	70	293	583	1158	1738	1930	2610	150	2310	770	820	780	390	8×21
	450	646	2400	3374	150	100	955	410	315	3673	70	293	583	1158	1738	1930	2610	150	2310	770	820	780	390	8×21
	500	646	2550	3524	150	100	955	410	315	3673	70	293	583	1193	1738	1930	2610	150	2310	770	820	780	390	8×21
	560	646	3150	4124	150	100	955	410	315	3838	70	293	583	1193	1738	2095	2610	150	2310	770	820	780	390	8×21

HP model	DIMENSIONS (mm)																							
	kW	kg P.	kg M.	kg Tot.	Dn_1	Dn_2	a	f	h_2	L	g_1	g_2	h_1	h_3	l_1	l_2	m	m_1	m_2	m_3	n	n_1	n_2	s
	90	401	625	1252	200	125	185	514,5	350	2140,5	50	351	482	880	1150,5	985	1800	150	1500	750	740	700	350	6×21
	110	401	968	1595	200	125	185	514,5	350	2315,5	50	351	482	1012	1150,5	1160	1800	150	1500	750	740	700	350	6×21
125/1	132	401	1100	1727	200	125	185	514,5	350	2345,5	50	351	482	1012	1150,5	1190	1800	150	1500	750	740	700	350	6×21
	160	401	1161	1788	200	125	185	514,5	350	2475,5	50	351	482	1012	1150,5	1320	1800	150	1500	750	740	700	350	6×21
	200	401	1221	1848	200	125	185	514,5	350	2475,5	50	351	482	1012	1150,5	1320	1800	150	1500	750	740	700	350	6×21
	160	482	1161	1901	200	125	295	514,5	350	2585,5	50	351	542	1072	1260,5	1320	2080	150	1780	890	820	780	390	6×21
	200	482	1221	1961	200	125	295	514,5	350	2585,5	50	351	542	1072	1260,5	1320	2080	150	1780	890	820	780	390	6×21
125/2	250	482	2090	2830	200	125	295	514,5	350	2765,5	50	351	542	1197	1260,5	1500	2080	150	1780	890	820	780	390	6×21
	315	482	2530	3270	200	125	295	514,5	350	2765,5	50	351	542	1197	1260,5	1500	2080	150	1780	890	820	780	390	6×21
	355	482	2000	2740	200	125	295	514,5	350	3055,5	50	351	542	1087	1260,5	1790	2080	150	1780	890	820	780	390	6×21
	400	482	2300	3040	200	125	295	514,5	350	3195,5	50	351	542	1117	1260,5	1930	2080	150	1780	890	820	780	390	6×21
	315	563	2530	3373	200	125	405	514,5	350	2875,5	50	351	542	1197	1370,5	1500	2180	150	1880	940	820	780	390	6×21
	355	563	2000	2843	200	125	405	514,5	350	3165,5	50	351	542	1087	1370,5	1790	2180	150	1880	940	820	780	390	6×21
	400	563	2300	3143	200	125	405	514,5	350	3305,5	50	351	542	1117	1370,5	1930	2180	150	1880	940	820	780	390	6×21
125/3	450	563	2400	3243	200	125	405	514,5	350	3305,5	50	351	542	1117	1370,5	1930	2180	150	1880	940	820	780	390	6×21
	510	563	2550	3393	200	125	405	514,5	350	3305,5	50	351	542	1117	1370,5	1930	2180	150	1880	940	820	780	390	6×21
	560	563	3150	3993	200	125	405	514,5	350	3470,5	50	351	542	1152	1370,5	2095	2180	150	1880	940	820	780	390	6×21
	650	563	3300	4143	200	125	405	514,5	350	3470,5	50	351	612	1222	1370,5	2095	2580	150	2280	760	980	940	470	8×21
	450	644	2400	3352	200	125	515	514,5	350	3415,5	50	351	612	1117	1480,5	1930	2700	150	2400	800	980	940	470	8×21
	510	644	2550	3502	200	125	515	514,5	350	3415,5	50	351	612	1117	1480,5	1930	2700	150	2400	800	980	940	470	8×21
125/4	560	644	3150	4102	200	125	515	514,5	350	3580,5	50	351	612	1152	1480,5	2095	2700	150	2400	800	980	940	470	8×21
	650	644	3300	4252	200	125	515	514,5	350	3580,5	50	351	612	1222	1480,5	2095	2700	150	2400	800	980	940	470	8×21
	750	644	3550	4502	200	125	515	514,5	350	3580,5	50	351	612	1222	1480,5	2095	2700	150	2400	800	980	940	470	8×21
	820	644	4600	5552	200	125	515	514,5	350	3805,5	50	351	612	1262	1480,5	2320	2700	150	2400	800	980	940	470	8×21
	650	725	3300	4359	200	125	625	514,5	350	3690,5	50	351	612	1222	1590,5	2095	2820	150	2520	840	980	940	470	8×21
	750	725	3550	4609	200	125	625	514,5	350	3690,5	50	351	612	1222	1590,5	2095	2820	150	2520	840	980	940	470	8×21
125/5	820	725	4600	5659	200	125	625	514,5	350	3915,5	50	351	612	1482	1590,5	2320	2820	150	2520	840	980	940	470	8×21
	940	725	4900	5959	200	125	625	514,5	350	3915,5	50	351	682	1507	1590,5	2320	3150	150	2850	950	1060	1020	510	8×21
	1030	725	5200	6259	200	125	625	514,5	350	3915,5	50	351	682	1507	1590,5	2320	3150	150	2850	950	1060	1020	510	8×21

HP 150

2.950 rpm - Grease lubrication

HP model	DIMENSIONS (mm)																							
	kW	kg P.	kg M.	kg Tot.	Dn_1	Dn_2	a	f	h_2	L	g_1	g_2	h_1	h_3	l_1	l_2	m	m_1	m_2	m_3	n	n_1	n_2	s
150/1	200	720	1221	2169	250	150	235	552,5	420	2627,5	40	405	553	1083	1302,5	1320	2060	150	1760	880	840	800	400	6×21
	250	720	2090	3038	250	150	235	552,5	420	2807,5	40	405	553	1208	1302,5	1500	2060	150	1760	880	840	800	400	6×21
	315	720	2530	3478	250	150	235	552,5	420	2807,5	40	405	553	1208	1302,5	1500	2060	150	1760	880	840	800	400	6×21
	355	720	2000	2948	250	150	235	552,5	420	3097,5	40	405	553	1098	1302,5	1790	2060	150	1760	880	840	800	400	6×21
	400	720	2300	3248	250	150	235	552,5	420	3237,5	40	405	553	1128	1302,5	1930	2060	150	1760	880	840	800	400	6×21
	450	720	2400	3348	250	150	235	552,5	420	3237,5	40	405	553	1128	1302,5	1930	2060	150	1760	880	840	800	400	6×21
	510	720	2550	3498	250	150	235	552,5	420	3237,5	40	405	553	1128	1302,5	1930	2060	150	1760	880	840	800	400	6×21
150/2	400	856	2300	3419	250	150	370	552,5	420	3232,5	40	405	682	1257	1437,5	1790	2970	150	2670	890	1080	1040	520	8×21
	450	856	2400	3519	250	150	370	552,5	420	3372,5	40	405	682	1257	1437,5	1930	2970	150	2670	890	1080	1040	520	8×21
	510	856	2550	3669	250	150	370	552,5	420	3372,5	40	405	682	1257	1437,5	1930	2970	150	2670	890	1080	1040	520	8×21
	560	856	3150	4269	250	150	370	552,5	420	3537,5	40	405	682	1292	1437,5	2095	2970	150	2670	890	1080	1040	520	8×21
	650	856	3300	4419	250	150	370	552,5	420	3537,5	40	405	682	1292	1437,5	2095	2970	150	2670	890	1080	1040	520	8×21
	750	856	3550	4669	250	150	370	552,5	420	3537,5	40	405	682	1292	1437,5	2095	2970	150	2670	890	1080	1040	520	8×21
	820	856	4600	5719	250	150	370	552,5	420	3762,5	40	405	682	1332	1437,5	2320	2970	150	2670	890	1080	1040	520	8×21
	940	856	4900	6019	250	150	370	552,5	420	3762,5	40	405	682	1332	1437,5	2320	2970	150	2670	890	1080	1040	520	8×21
	1030	856	5200	6319	250	150	370	552,5	420	3762,5	40	405	682	1332	1437,5	2320	2970	150	2670	890	1080	1040	520	8×21
	1200	856	6100	7219	250	150	370	552,5	420	4117,5	40	405	732	1432	1437,5	2675	3480	150	3180	1060	1220	1180	590	8×21
150/3	650	992	3300	4583	250	150	505	552,5	420	3672,5	40	405	682	1292	1572,5	2095	3090	150	2790	930	1080	1040	520	8×21
	750	992	3550	4833	250	150	505	552,5	420	3672,5	40	405	682	1292	1572,5	2095	3090	150	2790	930	1080	1040	520	8×21
	820	992	4600	5883	250	150	505	552,5	420	3897,5	40	405	682	1332	1572,5	2320	3090	150	2790	930	1080	1040	520	8×21
	940	992	4900	6183	250	150	505	552,5	420	3897,5	40	405	682	1332	1572,5	2320	3090	150	2790	930	1080	1040	520	8×21
	1030	992	5200	6483	250	150	505	552,5	420	3897,5	40	405	682	1332	1572,5	2320	3090	150	2790	930	1080	1040	520	8×21
	1200	992	6100	7383	250	150	505	552,5	420	4252,5	40	405	752	1452	1572,5	2675	3600	150	3300	1100	1220	1180	590	8×21
	1300	992	6300	7583	250	150	505	552,5	420	4252,5	40	405	752	1452	1572,5	2675	3600	150	3300	1100	1220	1180	590	8×21
	1420	992	6700	7983	250	150	505	552,5	420	4252,5	40	405	752	1452	1572,5	2675	3600	150	3300	1100	1220	1180	590	8×21
	1680	992	8200	9483	250	150	505	552,5	420	4442,5	40	405	792	1562	1572,5	2865	3480	150	3180	1060	1400	1360	680	8×21
150/4	1030	1128	5200	6656	250	150	640	552,5	420	4032,5	40	405	812	1462	1707,5	2320	3600	150	3300	1100	1400	1360	680	8×21
	1200	1128	6100	7556	250	150	640	552,5	420	4387,5	40	405	812	1512	1707,5	2675	3600	150	3300	1100	1400	1360	680	8×21
	1300	1128	6300	7756	250	150	640	552,5	420	4387,5	40	405	812	1512	1707,5	2675	3600	150	3300	1100	1400	1360	680	8×21
	1420	1128	6700	8156	250	150	640	552,5	420	4387,5	40	405	812	1512	1707,5	2675	3600	150	3300	1100	1400	1360	680	8×21
	1680	1128	8200	9656	250	150	640	552,5	420	4577,5	40	405	812	1562	1707,5	2865	3600	150	3300	1100	1400	1360	680	8×21
	1900	1128	8600	10056	250	150	640	552,5	420	4577,5	40	405	812	1562	1707,5	2865	3600	150	3300	1100	1400	1360	680	8×21

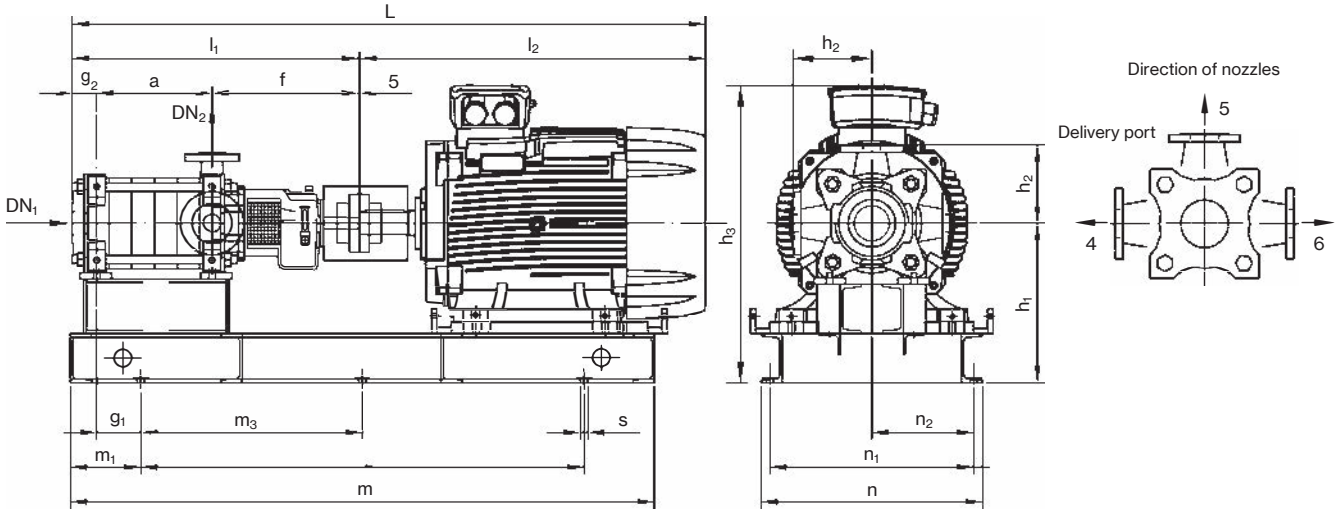

HPMA 25

1.450 rpm - Oil lubrication

HPMA model	DIMENSIONS (mm)																							
	kW	kg P.	kg M.	kg Tot.	Dn_1	Dn_2	a	f	h_2	L	g_1	g_2	h_1	h_3	l_1	l_2	m	m_1	m_2	m_3	n	n_1	n_2	s
25/1	0,75	33	12	87	50	25	55	280	165	664	100	41	263	393	376	283	640	150	340	-	310	275	137,5	4×17
25/2	0,75	42	12	96	50	25	100	280	165	709	100	41	263	393	421	283	680	150	380	-	310	275	137,5	4×17
25/3	0,75	51	12	106	50	25	145	280	165	754	100	41	263	393	466	283	720	150	420	-	310	275	137,5	4×17
25/4	1,1	60	25	122,1	50	25	190	280	165	799	100	41	283	413	511	283	760	150	460	-	320	280	140	4×19
25/5	1,1	69	25	137,1	50	25	235	280	165	844	100	41	283	413	556	283	820	150	520	-	320	280	140	4×19
	1,5	69	30	136	50	25	235	280	165	899	100	41	283	428	556	338	840	150	540	-	320	280	140	4×19
25/6	1,5	78	30	147	50	25	280	280	165	944	100	41	283	428	601	338	880	150	580	-	320	280	140	4×19
25/7	1,5	87	30	159	50	25	325	280	165	989	100	41	283	428	646	338	940	150	640	-	320	280	140	4×19
	2,2	87	36	167	50	25	325	280	165	1024	100	41	283	440	646	373	960	150	660	-	320	280	140	4×19
25/8	2,2	96	36	177	50	25	370	280	165	1069	100	41	283	440	691	373	1000	150	700	-	320	280	140	4×19
25/9	2,2	105	36	197	50	25	415	280	165	1114	100	41	303	460	736	373	1060	150	760	-	330	290	145	4×19
	3	105	40	199	50	25	415	280	165	1114	100	41	303	460	736	373	1060	150	760	-	330	290	145	4×19
25/10	2,2	114	36	208	50	25	460	280	165	1159	100	41	303	460	781	373	1100	150	800	-	330	290	145	4×19
	3	114	40	210	50	25	460	280	165	1159	100	41	303	460	781	373	1100	150	800	-	330	290	145	4×19
25/11	3	123	40	221	50	25	505	280	165	1204	100	41	303	460	826	373	1140	150	840	-	330	290	145	4×19
25/12	3	132	40	232	50	25	550	280	165	1249	100	41	303	460	871	373	1200	150	900	-	330	290	145	4×19
25/13	3	141	40	242	50	25	595	280	165	1294	100	41	303	460	916	373	1240	150	940	-	330	290	145	4×19
	4	141	46	245	50	25	595	280	165	1311	100	41	303	480	916	390	1240	150	940	-	360	320	160	4×19
25/14	3	150	40	254	50	25	640	280	165	1339	100	41	303	460	961	373	1280	150	980	-	330	290	145	4×19
	4	150	46	257	50	25	640	280	165	1356	100	41	303	480	961	390	1280	150	980	-	360	320	160	4×19
25/15	4	159	46	268	50	25	685	280	165	1401	100	41	303	480	1006	390	1340	150	1040	-	360	320	160	4×19
25/16	4	168	46	279	50	25	730	280	165	1446	100	41	303	480	1051	390	1380	150	1080	-	360	320	160	4×19
25/17	4	177	46	289	50	25	775	280	165	1491	100	41	303	480	1096	390	1420	150	1120	-	360	320	160	4×19
	5,5	177	70	306	50	25	775	280	165	1561	100	41	303	500	1096	460	1500	150	1200	-	360	320	160	4×19
25/18	4	186	46	300	50	25	820	280	165	1536	100	41	303	480	1141	390	1460	150	1160	-	360	320	160	4×19
	5,5	186	70	317	50	25	820	280	165	1606	100	41	323	520	1141	460	1560	150	1260	630	360	320	160	6×21
25/19	4	195	46	321	50	25	865	280	165	1581	100	41	323	480	1186	390	1520	150	1220	610	360	320	160	6×21
	5,5	195	70	342	50	25	865	280	165	1651	100	41	323	520	1186	460	1600	150	1300	650	360	320	160	6×21
25/20	5,5	204	70	353	50	25	910	280	165	1696	100	41	323	520	1231	460	1640	150	1340	670	360	320	160	6×21

HPMA 32

1.450 rpm - Oil lubrication

HPMA model	DIMENSIONS (mm)																							
	kW	kg P.	kg M.	kg Tot.	Dn_1	Dn_2	a	f	h_2	L	g_1	g_2	h_1	h_3	l_1	l_2	m	m_1	m_2	m_3	n	n_1	n_2	s
32/1	0,75	61	12	121	65	32	70	420	200	848	90	70	283	433	560	283	800	150	500	-	320	280	140	4×19
	1,1	61	25	127	65	32	70	420	200	903	90	70	323	448	560	338	840	150	540	-	320	280	140	4×19
32/2	1,1	76	25	143	65	32	125	420	200	958	90	70	303	448	615	338	880	150	580	-	320	280	140	4×19
	1,5	76	30	145	65	32	125	420	200	958	90	70	303	448	615	338	880	150	580	-	320	280	140	4×19
	2,2	76	36	146	65	32	125	420	200	993	90	70	303	460	615	373	920	150	620	-	320	280	140	4×19
32/3	1,5	91	30	162	65	32	180	420	200	1033	90	70	303	448	670	358	980	150	680	-	320	280	140	4×19
	2,2	91	36	168	65	32	180	420	200	1068	90	70	303	460	670	393	980	150	680	-	320	280	140	4×19
	3	91	40	172	65	32	180	420	200	1068	90	70	303	460	670	393	980	150	680	-	320	280	140	4×19
32/4	2,2	106	36	191	65	32	235	420	200	1123	90	70	323	460	725	393	1020	150	720	-	320	280	140	4×19
	3	106	40	195	65	32	235	420	200	1123	90	70	323	460	725	393	1020	150	720	-	320	280	140	4×19
	4	106	46	201	65	32	235	420	200	1140	90	70	323	500	725	410	1040	150	740	-	320	280	140	4×19
32/5	2,2	121	36	207	65	32	290	420	200	1178	90	70	323	460	780	393	1080	150	780	-	320	280	140	4×19
	3	121	40	211	65	32	290	420	200	1178	90	70	323	460	780	393	1080	150	780	-	320	280	140	4×19
	4	121	46	217	65	32	290	420	200	1195	90	70	323	500	780	410	1100	150	800	-	320	280	140	4×19
32/6	3	136	40	223	65	32	345	420	200	1233	90	70	323	460	835	393	1140	150	840	-	320	280	140	4×19
	4	136	46	229	65	32	345	420	200	1250	90	70	323	500	835	410	1140	150	840	-	320	280	140	4×19
	5,5	136	70	253	65	32	345	420	200	1320	90	70	323	520	835	480	1220	150	920	-	320	280	140	4×19
32/7	4	151	46	247	65	32	400	420	200	1305	90	70	323	500	890	410	1280	150	980	-	320	280	140	4×19
	5,5	151	70	271	65	32	400	420	200	1375	90	70	323	520	890	480	1280	150	980	-	320	280	140	4×19
32/8	4	166	46	279	65	32	455	420	200	1360	90	70	323	500	945	410	1340	150	1040	-	320	280	140	4×19
	5,5	166	70	303	65	32	455	420	200	1430	90	70	323	520	945	480	1340	150	1040	-	320	280	140	4×19
	7,5	166	57	290	65	32	455	420	200	1466	90	70	323	520	945	516	1340	150	1040	-	320	280	140	4×19
32/9	5,5	181	70	294	65	32	510	420	200	1485	90	70	323	520	1000	480	1380	150	1080	-	320	280	140	4×19
	7,5	181	57	306	65	32	510	420	200	1521	90	70	323	520	1000	516	1380	150	1080	-	320	280	140	4×19
32/10	5,5	196	70	334	65	32	565	420	200	1540	90	70	323	520	1055	480	1440	150	1140	-	320	280	140	4×19
	7,5	196	57	346	65	32	565	420	200	1576	90	70	323	520	1055	516	1440	150	1140	-	320	280	140	4×19
	11	196	125	414	65	32	565	420	200	1675	90	70	323	578	1055	615	1560	150	1260	-	360	320	160	4×19
32/11	5,5	211	70	351	65	32	620	420	200	1595	90	70	323	520	1110	480	1500	150	1200	-	320	280	140	4×19
	7,5	211	57	363	65	32	620	420	200	1631	90	70	323	520	1110	516	1500	150	1200	-	320	280	140	4×19
	11	211	125	431	65	32	620	420	200	1730	90	70	343	578	1110	615	1620	150	1320	620	360	320	160	6×21
32/12	5,5	226	70	368	65	32	675	420	200	1650	90	70	323	520	1165	480	1560	150	1260	620	320	280	140	6×19
	7,5	226	57	380	65	32	675	420	200	1686	90	70	323	520	1165	516	1560	150	1260	620	320	280	140	6×19
	11	226	125	448	65	32	675	420	200	1785	90	70	343	578	1165	615	1680	150	1380	630	360	310	155	6×21
32/13	7,5	241	57	399	65	32	730	420	200	1741	90	70	343	520	1220	516	1740	150	1440	690	360	310	155	6×21
	11	241	125	467	65	32	730	420	200	1840	90	70	343	578	1220	615	1740	150	1440	690	360	310	155	6×21
32/14	7,5	256	57	416	65	32	785	420	200	1796	90	70	343	520	1275	516	1780	150	1480	710	360	310	155	6×21
	11	256	125	484	65	32	785	420	200	1895	90	70	343	578	1275	615	1780	150	1480	710	360	310	155	6×21
32/15	7,5	287	57	423	65	32	840	420	200	1851	90	70	343	520	1330	516	1840	150	1540	740	360	310	155	6×21
	11	376	125	491	65	32	840	420	200	1950	90	70	343	578	1330	615	1840	150	1540	740	360	310	155	6×21
	15	376	150	516	65	32	840	420	200	2045	90	70	343	595	1330	710	1840	150	1540	740	360	310	155	6×21
32/16	11	286	125	519	65	32	895	420	200	2005	90	70	343	578	1385	615	1900	150	1600	770	360	310	155	6×21
	15	286	150	533	65	32	895	420	200	2100	90	70	343	595	1385	710	1900	150	1600	770	360	310	155	6×21
32/17	11	301	125	537	65	32	950	420	200	2060	90	70	343	578	1440	615	1960	150	1660	800	360	310	155	6×21
	15	301	150	551	65	32	950	420	200	2155	90	70	343	595	1440	710	1960	150	1660	800	360	310	155	6×21
32/18	11	316	125	554	65	32	1005	420	200	2115	90	70	343	578	1495	615	2000	150	1700	790	360	310	155	6×21
	15	316	150	568	65	32	1005	420	200	2210	90	70	343	595	1495	710	2000	150	1700	790	360	310	155	6×21
32/19	11	331	125	566	65	32	1060	420	200	2170	90	70	363	578	1550	615	2060	150	1760	850	360	310	155	6×21
	15	331	150	580	65	32	1060	420	200	2265	90	70	363	595	1550	710	2060	150	1760	850	360	310	155	6×21
32/20	11	346	125	612	65	32	1115	420	200	2225	90	70	363	578	1605	615	2120	150	1820	880	360	310	155	6×21
	15	346	150	626	65	32	1115	420	200	2320	90	70	363	595	1605	710	2120	150	1820	880	360	310	155	6×21
	18,5	346	171	665	65	32	1115	420	200	2340	90	70	363	633	1605	730	2220	150	1920	920	450	400	200	6×21

HPMA model	DIMENSIONS (mm)																							
	kW	kg P.	kg M.	kg Tot.	Dn_1	Dn_2	a	f	h_2	L	g_1	g_2	h_1	h_3	l_1	l_2	m	m_1	m_2	m_3	n	n_1	n_2	s
50/1	1,1	76	25	392	100	50	90	465	225	1087	90	67	318	463	752	330	920	150	620	-	360	320	160	4×19
	1,5	76	30	397	100	50	90	465	225	1115	90	67	318	463	752	358	920	150	620	-	360	320	160	4×19
	2,2	76	36	403	100	50	90	465	225	1150	90	67	318	475	752	393	920	150	620	-	360	320	160	4×19
50/2	2,2	95	36	403	100	50	220	465	225	1150	90	67	338	475	752	393	1060	150	760	-	360	320	160	4×19
	3	95	40	407	100	50	220	465	225	1150	90	67	338	495	752	393	1060	150	760	-	360	320	160	4×19
	4	95	46	413	100	50	220	465	225	1167	90	67	338	515	752	410	1060	150	760	-	360	320	160	4×19
50/3	3	114	40	407	100	50	282	465	225	1212	90	67	338	495	814	393	1120	150	820	-	360	320	160	4×19
	4	114	46	413	100	50	282	465	225	1229	90	67	338	515	814	410	1120	150	820	-	360	320	160	4×19
	5,5	114	70	437	100	50	282	465	225	1299	90	67	338	535	814	480	1200	150	900	-	380	340	170	4×19
50/4	4	133	46	413	100	50	344	465	225	1291	90	67	338	515	876	410	1260	150	960	-	380	340	170	4×19
	5,5	133	70	437	100	50	344	465	225	1361	90	67	338	535	876	480	1260	150	960	-	380	340	170	4×19
	7,5	133	57	424	100	50	344	465	225	1397	90	67	338	535	876	516	1260	150	960	-	380	340	170	4×19
50/5	5,5	152	70	437	100	50	406	465	225	1423	90	67	338	535	938	480	1320	150	1020	-	380	340	170	4×19
	7,5	152	57	424	100	50	406	465	225	1459	90	67	338	535	938	516	1320	150	1020	-	380	340	170	4×19
	11	152	125	492	100	50	406	465	225	1558	90	67	338	593	938	615	1460	150	1160	-	380	340	170	4×19
50/6	5,5	171	70	437	100	50	468	465	225	1485	90	67	333	535	1000	480	1400	150	1100	-	380	340	170	4×19
	7,5	171	57	424	100	50	468	465	225	1521	90	67	333	535	1000	516	1400	150	1100	-	380	340	170	4×19
	11	171	125	492	100	50	468	465	225	1620	90	67	388	593	1000	615	1520	150	1220	610	380	340	170	6×21
50/7	7,5	190	57	424	100	50	530	465	225	1583	90	67	353	535	1062	516	1580	150	1280	640	380	340	170	6×21
	11	190	125	492	100	50	530	465	225	1682	90	67	353	593	1062	615	1580	150	1280	640	380	340	170	6×21
	15	190	150	517	100	50	530	465	225	1777	90	67	588	840	1062	710	1580	150	1280	640	380	340	170	6×21
50/8	7,5	209	57	424	100	50	592	465	225	1645	90	67	353	535	1124	516	1640	150	1340	640	380	340	170	6×21
	11	209	125	492	100	50	592	465	225	1744	90	67	353	593	1124	615	1640	150	1340	640	380	340	170	6×21
	15	209	150	517	100	50	592	465	225	1839	90	67	588	840	1124	710	1640	150	1340	670	380	340	170	6×21
50/9	11	228	125	643	100	50	654	465	225	1806	90	67	358	593	1186	615	1700	150	1400	700	380	340	170	6×21
	15	228	150	668	100	50	654	465	225	1901	90	67	358	840	1186	710	1700	150	1400	700	380	340	170	6×21
	18,5	228	171	689	100	50	654	465	225	1921	90	67	358	628	1186	730	1780	150	1480	740	440	400	200	6×21
50/10	11	247	125	643	100	50	716	465	225	1868	90	67	358	613	1248	615	1760	150	1460	730	380	340	170	6×21
	15	247	150	668	100	50	716	465	225	1963	90	67	358	610	1248	710	1760	150	1460	730	380	340	170	6×21
	18,5	247	171	689	100	50	716	465	225	1983	90	67	358	628	1248	730	1840	150	1540	770	440	400	200	6×21
	22	247	190	708	100	50	716	465	225	2033	90	67	358	628	1248	780	1840	150	1540	770	440	400	200	6×21
50/11	11	266	125	643	100	50	778	465	225	1930	90	67	358	613	1310	615	1840	150	1540	770	380	340	170	6×21
	15	266	150	668	100	50	778	465	225	2025	90	67	358	610	1310	710	1840	150	1540	770	380	340	170	6×21
	18,5	266	171	689	100	50	778	465	225	2045	90	67	358	628	1310	730	1900	150	1600	800	440	400	200	6×21
	22	266	190	708	100	50	778	465	225	2095	90	67	358	628	1310	780	1900	150	1600	800	440	400	200	6×21
50/12	11	285	125	643	100	50	840	465	225	1992	90	67	358	613	1372	615	1900	150	1600	800	380	340	170	6×21
	15	285	150	668	100	50	840	465	225	2087	90	67	358	610	1372	710	1900	150	1600	800	380	340	170	6×21
	18,5	285	171	689	100	50	840	465	225	2107	90	67	358	628	1372	730	1960	150	1660	830	440	400	200	6×21
	22	285	190	708	100	50	840	465	225	2157	90	67	358	628	1372	780	1960	150	1660	830	440	400	200	6×21
50/13	15	304	150	668	100	50	902	465	225	2149	90	67	358	610	1434	710	2040	150	1740	870	460	420	210	6×21
	18,5	304	171	689	100	50	902	465	225	2169	90	67	358	628	1434	730	2040	150	1740	870	460	420	210	6×21
	22	304	190	708	100	50	902	465	225	2219	90	67	358	628	1434	780	2040	150	1740	870	460	420	210	6×21
	30	304	255	773	100	50	902	465	225	2210	90	67	358	661	1434	771	2080	150	1780	890	500	460	230	6×21
50/14	15	323	150	668	80	50	896	449	225	2439	90	67	358	610	1724	710	2000	150	1700	850	440	400	200	6×21
	18,5	323	171	689	80	50	896	449	225	2459	90	67	358	628	1724	730	2000	150	1700	850	440	400	200	6×21
	22	323	190	708	80	50	896	449	225	2509	90	67	358	628	1724	780	2000	150	1700	850	440	400	200	6×21
	30	323	255	773	80	50	896	449	225	2500	90	67	378	661	1724	771	2040	150	1740	870	500	460	230	6×21
50/15	15	342	150	691	80	50	958	449	225	2501	90	67	378	610	1786	710	2080	150	1780	890	440	400	200	6×21
	18,5	342	171	712	80	50	958	449	225	2521	90	67	378	628	1786	730	2080	150	1780	890	440	400	200	6×21
	22	342	190	731	80	50	958	449	225	2571	90	67	378	628	1786	780	2080	150	1780	890	440	400	200	6×21
	30	342	255	796	80	50	958	449	225	2562	90	67	378	661	1786	771	2120	150	1820	910	500	460	260	6×21
50/16	18,5	361	171	773	80	50	1020	449	225	2583	90	67	378	648	1848	730	2140	150	1840	920	460	420	210	6×21
	22	361	190	792	80	50	1020	449	225	2633	90	67	378	648	1848	780	2140	150	1840	920	460	420	210	6×21
	30	361	255	857	80	50	1020	449	225	2624	90	67	378	681	1848	771	2180	150	1880	640	500	460	230	6×21
50/17	18,5	380	171	773	80	50	1082	449	225	2645	90	67	378	648	1910	730	2200	150	1900	950	460	420	210	6×21
	22	380	190	792	80	50	1082	449	225	2695	90	67	378	648	1910	780	2200	150	1900	950	460	420	210	6×21
	30	380	255	857	80	50	1082	449	225	2686	90	67	378	681	1910	771	2240	150	1940	970	500	460	230	6×21
	37	380	269	871	80	50	1082	449	225	2730	90	67	408	720	1910	815	2280	150	1980	990	540	500	250	6×21
50/18	18,5	399	171	795	80	50	1144	449	225	2707	90	67	378	648	1972	730	2260	150	1960	980	460	420	210	6×21
	22	399	190	814	80	50	1144	449	225	2757	90	67	378	648	1972	780	2260	150	1960	980	460	420	210	6×21
	30	399	255	879	80	50	1144	449	225	2748	90	67	378	681	1972	771	2300	150	2000	1000	500	460	230	6×21
	37	399	269	893	80	50	1144	449	225	2792	90	67	408	720	1972	815	2340	150	2040	1020	540	500	250	6×21

HPMA 80

1.450 rpm - Oil lubrication

HPMA model	DIMENSIONS (mm)																							
	kW	kg P.	kg M.	kg Tot.	Dn_1	Dn_2	a	f	h_2	L	g_1	g_2	h_1	h_3	l_1	l_2	m	m_1	m_2	m_3	n	n_1	n_2	s
80/1	1,5	120	30	209	125	80	120	485	250	1333	80	65	338	483	970	358	980	150	680	-	420	380	190	4×19
	2,2	120	36	215	125	80	120	485	250	1368	80	65	338	495	970	393	980	150	680	-	420	380	190	4×19
	3	120	40	219	125	80	120	485	250	1368	80	65	338	495	970	393	980	150	680	-	420	380	190	4×19
	4	120	46	225	125	80	120	485	250	1385	80	65	338	515	970	410	1000	150	700	-	420	380	190	4×19
80/2	3	149	40	258	125	80	195	485	250	1143	80	65	358	495	745	393	1140	150	840	-	420	380	190	4×19
	4	149	46	264	125	80	195	485	250	1160	80	65	358	515	745	410	1140	150	840	-	420	380	190	4×19
	5,5	149	70	288	125	80	195	485	250	1230	80	65	358	555	745	480	1140	150	840	-	420	380	190	4×19
	7,5	149	57	275	125	80	195	485	250	1266	80	65	358	555	745	516	1140	150	840	-	420	380	190	4×19
80/3	5,5	178	70	320	125	80	270	485	250	1305	80	65	358	555	820	480	1340	150	1040	-	420	380	190	4×19
	7,5	178	57	307	125	80	270	485	250	1341	80	65	358	555	820	516	1340	150	1040	-	420	380	190	4×19
	11	178	125	375	125	80	270	485	250	1440	80	65	358	613	820	615	1340	150	1040	-	420	380	190	4×19
	15	178	150	400	125	80	270	485	250	1535	80	65	358	610	820	710	1340	150	1040	-	420	380	190	4×19
80/4	7,5	207	57	340	125	80	345	485	250	1416	80	65	358	555	895	516	1420	150	1120	-	420	380	190	4×19
	11	207	125	408	125	80	345	485	250	1515	80	65	358	613	895	615	1420	150	1120	-	420	380	190	4×19
	15	207	150	433	125	80	345	485	250	1610	80	65	358	610	895	710	1420	150	1120	-	420	380	190	4×19
80/5	11	236	125	487	125	80	420	485	250	1590	80	65	358	613	970	615	1480	150	1180	-	420	380	190	4×19
	15	236	150	512	125	80	420	485	250	1685	80	65	358	610	970	710	1480	150	1180	-	420	380	190	4×19
	18,5	236	171	533	125	80	420	485	250	1705	80	65	378	648	970	730	1580	150	1280	640	460	420	210	6×21
80/6	15	265	150	539	125	80	495	485	250	1760	80	65	378	610	1045	710	1660	150	1360	680	460	420	210	6×21
	18,5	265	171	560	125	80	495	485	250	1780	80	65	378	648	1045	730	1660	150	1360	680	460	420	210	6×21
	22	265	190	579	125	80	495	485	250	1830	80	65	378	648	1045	780	1660	150	1360	680	460	420	210	6×21
	30	265	255	644	125	80	495	485	250	1821	80	65	378	681	1045	771	1680	150	1380	690	500	460	230	6×21
80/7	15	294	150	572	125	80	570	485	250	1835	80	65	378	610	1120	710	1720	150	1420	710	460	420	210	6×21
	18,5	294	171	593	125	80	570	485	250	1855	80	65	378	648	1120	730	1720	150	1420	710	460	420	210	6×21
	22	294	190	612	125	80	570	485	250	1905	80	65	378	648	1120	780	1720	150	1420	710	460	420	210	6×21
	30	294	255	677	125	80	570	485	250	1896	80	65	378	681	1120	771	1760	150	1460	730	500	460	230	6×21
80/8	18,5	323	171	627	125	80	645	485	250	1930	80	65	378	648	1195	730	1840	150	1540	770	500	460	230	6×21
	22	323	190	646	125	80	645	485	250	1980	80	65	378	648	1195	780	1840	150	1540	770	500	460	230	6×21
	30	323	255	711	125	80	645	485	250	1971	80	65	378	681	1195	771	1840	150	1540	770	500	460	230	6×21
80/9	22	352	190	684	125	80	720	485	250	2055	80	65	378	648	1270	780	1920	150	1620	810	500	460	230	6×21
	30	352	255	749	125	80	720	485	250	2046	80	65	378	681	1270	771	1920	150	1620	810	500	460	230	6×21
	37	352	269	763	125	80	720	485	250	2090	80	65	383	695	1270	815	1960	150	1660	830	540	500	250	6×21
80/10	22	381	190	733	125	80	795	485	250	2130	80	65	378	648	1345	780	1980	150	1680	840	500	460	230	6×21
	30	381	255	798	125	80	795	485	250	2121	80	65	378	681	1345	771	1980	150	1680	840	500	460	230	6×21
	37	381	269	812	125	80	795	485	250	2165	80	65	403	695	1345	815	2040	150	1740	870	540	500	250	6×21
80/11	30	410	255	850	125	80	870	485	250	2196	80	65	403	681	1420	771	2120	150	1820	910	540	500	250	6×21
	37	410	269	864	125	80	870	485	250	2240	80	65	403	695	1420	815	2120	150	1820	910	540	500	250	6×21
	45	410	353	948	125	80	870	485	250	2245	80	65	403	715	1420	820	2120	150	1820	910	540	500	250	6×21
80/12	30	439	255	879	125	80	945	485	250	2271	80	65	403	681	1495	771	2200	150	1900	950	540	500	250	6×21
	37	439	269	893	125	80	945	485	250	2315	80	65	403	695	1495	815	2200	150	1900	950	540	500	250	6×21
	5,5	439	70	694	125	80	945	485	250	2320	80	65	403	715	1495	820	2200	150	1900	950	540	500	250	6×21
80/13	30	468	255	908	125	80	1020	485	250	2346	80	65	403	681	1570	771	2260	150	1960	980	540	500	250	6×21
	37	468	269	922	125	80	1020	485	250	2390	80	65	403	695	1570	815	2260	150	1960	980	540	500	250	6×21
	45	468	353	1006	125	80	1020	485	250	2395	80	65	403	715	1570	820	2260	150	1960	980	540	500	250	6×21
	55	468	450	1103	125	80	1020	485	250	2485	80	65	433	788	1570	910	2340	150	2040	1020	600	560	280	6×21
80/14	37	497	269	957	125	80	1095	485	250	2465	80	65	403	695	1645	815	2340	150	2040	1020	540	500	250	6×21
	45	497	353	1041	125	80	1095	485	250	2470	80	65	403	715	1645	820	2340	150	2040	1020	540	500	250	6×21
	55	497	450	1138	125	80	1095	485	250	2560	80	65	433	788	1645	910	2420	150	2120	1060	600	560	280	6×21
80/15	37	526	269	986	125	80	1170	485	250	2540	80	65	403	695	1720	815	2420	150	2120	1060	540	500	250	6×21
	45	526	353	1070	125	80	1170	485	250	2545	80	65	403	715	1720	820	2420	150	2120	1060	540	500	250	6×21
	55	526	450	1167	125	80	1170	485	250	2635	80	65	433	788	1720	910	2480	150	2180	1090	600	560	280	6×21
	75	526	605	1322	125	80	1170	485	250	2710	80	65	493	891	1720	985	2580	150	2280	1140	660	620	310	8×21
80/16	37	555	269	1021	125	80	1245	485	250	2615	80	65	403	695	1795	815	2500	150	2200	1100	540	500	250	6×21
	45	555	353	1105	125	80	1245	485	250	2620	80	65	403	715	1795	820	2500	150	2200	1100	540	500	250	6×21
	55	555	450	1202	125	80	1245	485	250	2710	80	65	453	788	1795	910	2550	150	2250	1125	620	580	290	8×21
	75	555	605	1357	125	80	1245	485	250	2785	80	65	493	891	1795	985	2640	150	2340	1170	660	620	310	8×21

HPMA model	DIMENSIONS (mm)																							
	kW	kg P.	kg M.	kg Tot.	Dn_1	Dn_2	a	f	h_2	L	g_1	g_2	h_1	h_3	l_1	l_2	m	m_1	m_2	m_3	n	n_1	n_2	s
100/1	5,5	197	70	369	150	100	145	545	315	1250	70	75	408	605	765	480	1160	150	860	-	480	440	220	4×19
	7,5	197	57	356	150	100	145	545	315	1286	70	75	408	605	765	516	1160	150	860	-	480	440	220	4×19
	11	197	125	424	150	100	145	545	315	1385	70	75	408	663	765	615	1280	150	980	-	480	440	220	4×19
100/2	11	242	125	494	150	100	235	545	315	1475	70	75	408	663	855	615	1380	150	1080	-	480	440	220	4×19
	15	242	150	519	150	100	235	545	315	1570	70	75	408	660	855	710	1380	150	1080	-	480	440	220	4×19
	18,5	242	171	540	150	100	235	545	315	1590	70	75	408	678	855	730	1440	150	1140	-	500	460	230	4×19
100/3	15	287	150	586	150	100	325	545	315	1660	70	75	428	663	945	710	1520	150	1220	610	500	460	230	6×21
	18,5	287	171	607	150	100	325	545	315	1680	70	75	428	660	945	730	1520	150	1220	610	500	460	230	6×21
	22	287	190	626	150	100	325	545	315	1730	70	75	428	678	945	780	1520	150	1220	610	500	460	230	6×21
	30	287	255	691	150	100	325	545	315	1721	70	75	428	731	945	771	1560	150	1260	630	500	460	230	6×21
100/4	18,5	332	171	667	150	100	415	545	315	1770	70	75	428	660	1035	730	1640	150	1340	670	500	460	230	6×21
	22	332	190	686	150	100	415	545	315	1820	70	75	428	678	1035	780	1640	150	1340	670	500	460	230	6×21
	30	332	255	751	150	100	415	545	315	1811	70	75	428	731	1035	771	1640	150	1340	670	500	460	230	6×21
	37	332	269	765	150	100	415	545	315	1855	70	75	413	725	1035	815	1720	150	1420	710	520	480	240	6×21
100/5	22	377	190	741	150	100	505	545	315	1910	70	75	413	678	1125	780	1820	150	1520	760	520	480	240	6×21
	30	377	255	806	150	100	505	545	315	1901	70	75	413	731	1125	771	1820	150	1520	760	520	480	240	6×21
	37	377	269	820	150	100	505	545	315	1945	70	75	413	725	1125	815	1820	150	1520	760	520	480	240	6×21
	45	377	353	904	150	100	505	545	315	1950	70	75	413	725	1125	820	1820	150	1520	760	520	480	240	6×21
100/6	30	422	255	859	150	100	595	545	315	1991	70	75	413	731	1215	771	1900	150	1600	800	520	480	240	6×21
	37	422	269	873	150	100	595	545	315	2035	70	75	413	725	1215	815	1900	150	1600	800	520	480	240	6×21
	45	422	353	957	150	100	595	545	315	2040	70	75	413	725	1215	820	1900	150	1600	800	520	480	240	6×21
	55	422	450	1054	150	100	595	545	315	2130	70	75	413	768	1215	910	1980	150	1680	840	560	520	260	6×21
100/7	37	467	269	926	150	100	685	545	315	2125	70	75	413	725	1305	815	2000	150	1700	850	520	480	240	6×21
	45	467	353	1010	150	100	685	545	315	2130	70	75	413	725	1305	820	2000	150	1700	850	520	480	240	6×21
	55	467	450	1107	150	100	685	545	315	2220	70	75	433	725	1305	910	2060	150	1760	880	580	540	270	6×21
100/8	45	512	353	1063	150	100	775	545	315	2220	70	75	433	725	1395	820	2160	150	1860	930	580	540	270	6×21
	55	512	450	1160	150	100	775	545	315	2310	70	75	433	725	1395	910	2160	150	1860	930	580	540	270	6×21
	75	512	605	1315	150	100	775	545	315	2385	70	75	463	861	1395	985	2240	150	1940	970	640	600	300	6×21
100/9	45	557	353	1113	150	100	865	545	315	2310	70	75	433	725	1485	820	2240	150	1940	970	580	540	270	6×21
	55	557	450	1210	150	100	865	545	315	2400	70	75	433	725	1485	910	2240	150	1940	970	580	540	270	6×21
	75	557	605	1365	150	100	865	545	315	2475	70	75	463	861	1485	985	2340	150	2040	1020	640	600	300	6×21
100/10	45	602	353	1163	150	100	955	545	315	2400	70	75	463	775	1575	820	2420	150	2120	1060	640	600	300	6×21
	55	602	450	1260	150	100	955	545	315	2490	70	75	463	818	1575	910	2420	150	2120	1060	640	600	300	6×21
	75	602	605	1415	150	100	955	545	315	2565	70	75	463	861	1575	985	2420	150	2120	1060	640	600	300	6×21
	90	602	700	1510	150	100	955	545	315	2615	70	75	463	861	1575	1035	2420	150	2120	1060	640	600	300	6×21
100/11	55	647	450	1310	150	100	1045	545	315	2580	70	75	483	818	1665	910	2520	150	2220	1110	640	600	300	8×21
	75	647	605	1465	150	100	1045	545	315	2655	70	75	483	861	1665	985	2520	150	2220	1110	640	600	300	8×21
	90	647	700	1560	150	100	1045	545	315	2705	70	75	483	861	1665	1035	2520	150	2220	1110	640	600	300	8×21
100/12	55	692	450	1365	150	100	1135	545	315	2670	70	75	483	818	1755	910	2610	150	2310	770	640	600	300	8×21
	75	692	605	1520	150	100	1135	545	315	2745	70	75	483	861	1755	985	2610	150	2310	770	640	600	300	8×21
	90	692	700	1615	150	100	1135	545	315	2795	70	75	483	861	1755	1035	2610	150	2310	770	640	600	300	8×21
	110	692	925	1840	150	100	1135	545	315	2920	70	75	543	1073	1755	1160	2790	150	2490	830	740	700	350	8×21
100/13	75	737	605	1577	150	100	1225	545	315	2835	70	75	483	881	1845	985	2700	150	2400	800	640	600	300	8×21
	90	737	700	1672	150	100	1225	545	315	2885	70	75	483	881	1845	1035	2700	150	2400	800	640	600	300	8×21
	110	737	925	1897	150	100	1225	545	315	3010	70	75	543	1073	1845	1160	2880	150	2580	860	740	700	350	8×21
100/14	75	782	605	1634	150	100	1315	545	315	2925	70	75	483	881	1935	985	2790	150	2490	830	640	600	300	8×21
	90	782	700	1729	150	100	1315	545	315	2975	70	75	483	881	1935	1035	2790	150	2490	830	640	600	300	8×21
	110	782	925	1954	150	100	1315	545	315	3100	70	75	543	1073	1935	1160	2970	150	2670	890	740	700	350	8×21

HPMA 125

1.450 rpm - Oil lubrication

HPMA model	DIMENSIONS (mm)																							
	kW	kg P.	kg M.	kg Tot.	Dn_1	Dn_2	a	f	h_2	L	g_1	g_2	h_1	h_3	l_1	l_2	m	m_1	m_2	m_3	n	n_1	n_2	s
125/1	18,5	343	171	668	200	125	155	650	350	1625	50	85	518	788	890	730	1520	150	1220	610	600	560	280	6×21
	22	343	190	687	200	125	155	650	350	1675	50	85	518	788	890	780	1520	150	1220	610	600	560	280	6×21
	30	343	255	752	200	125	155	650	350	1666	50	85	518	821	890	771	1520	150	1220	610	600	560	280	6×21
125/2	37	424	269	847	200	125	265	650	350	1820	50	85	518	830	1000	815	1760	150	1460	730	600	560	280	6×21
	45	424	353	931	200	125	265	650	350	1825	50	85	518	830	1000	820	1760	150	1460	730	600	560	280	6×21
	55	424	450	1028	200	125	265	650	350	1915	50	85	518	873	1000	910	1760	150	1460	730	600	560	280	6×21
125/3	45	505	353	1028	200	125	375	650	350	1935	50	85	518	830	1110	820	1960	150	1660	830	640	600	300	6×21
	55	505	450	1125	200	125	375	650	350	2025	50	85	518	873	1110	910	1960	150	1660	830	640	600	300	6×21
	75	505	605	1280	200	125	375	650	350	2100	50	85	518	916	1110	985	1960	150	1660	830	640	600	300	6×21
125/4	75	586	605	1376	200	125	485	650	350	2210	50	85	518	916	1220	985	2260	150	1960	980	720	680	340	6×21
	90	586	700	1471	200	125	485	650	350	2260	50	85	518	916	1220	1035	2260	150	1960	980	720	680	340	6×21
	110	586	925	1696	200	125	485	650	350	2385	50	85	518	1048	1220	1160	2260	150	1960	980	720	680	340	6×21
125/5	90	667	700	1552	200	125	595	650	350	2370	50	85	518	916	1330	1035	2360	150	2060	1030	720	680	340	6×21
	110	667	925	1777	200	125	595	650	350	2495	50	85	518	1048	1330	1160	2360	150	2060	1030	720	680	340	6×21
	132	667	1180	2032	200	125	595	650	350	2525	50	85	518	1048	1330	1190	2360	150	2060	1030	720	680	340	6×21
125/6	110	748	925	1874	200	125	705	650	350	2605	50	85	518	1048	1440	1160	2480	150	2180	1090	720	680	340	6×21
	132	748	1180	2129	200	125	705	650	350	2635	50	85	518	1048	1440	1190	2480	150	2180	1090	720	680	340	6×21
	160	748	1161	2110	200	125	705	650	350	2765	50	85	518	1048	1440	1320	2480	150	2180	1090	720	680	340	6×21
125/7	132	829	1180	2222	200	125	815	650	350	2745	50	85	538	1048	1550	1190	2580	150	2280	760	720	680	340	8×21
	160	829	1161	2203	200	125	815	650	350	2875	50	85	538	1048	1550	1320	2580	150	2280	760	720	680	340	8×21
	200	829	1241	2283	200	125	815	650	350	2875	50	85	538	1048	1550	1320	2580	150	2280	760	720	680	340	8×21
125/8	132	910	1180	2313	200	125	925	650	350	2855	50	85	538	1048	1660	1190	2700	150	2400	800	720	680	340	8×21
	160	910	1161	2294	200	125	925	650	350	2985	50	85	538	1048	1660	1320	2700	150	2400	800	720	680	340	8×21
	200	910	1241	2374	200	125	925	650	350	2985	50	85	538	1048	1660	1320	2700	150	2400	800	720	680	340	8×21
125/9	160	991	1161	2381	200	125	1035	650	350	3095	50	85	538	1048	1770	1320	2790	150	2490	830	720	680	340	8×21
	200	991	1241	2461	200	125	1035	650	350	3095	50	85	538	1048	1770	1320	2790	150	2490	830	720	680	340	8×21
	250	991	1870	3090	200	125	1035	650	350	3275	50	85	562	1217	1770	1500	2970	150	2670	890	840	800	400	8×21
125/10	200	1072	1241	2549	200	125	1145	650	350	3205	50	85	538	1048	1880	1320	2910	150	2610	870	720	680	340	8×21
	250	1072	1870	3178	200	125	1145	650	350	3385	50	85	582	1217	1880	1500	3090	150	2790	930	840	800	400	8×21
125/11	200	1153	1241	2638	200	125	1255	650	350	3315	50	85	582	1048	1990	1320	3210	150	2910	970	840	800	400	8×21
	250	1153	1870	3267	200	125	1255	650	350	3495	50	85	582	1217	1990	1500	3210	150	2910	970	840	800	400	8×21
	315	1153	2090	3487	200	125	1255	650	350	3495	50	85	582	1217	1990	1500	3210	150	2910	970	840	800	400	8×21
125/12	250	1234	1870	3360	200	125	1365	650	350	3605	50	85	582	1217	2100	1500	3300	150	3030	1010	840	800	400	8×21
	315	1234	2090	3580	200	125	1365	650	350	3605	50	85	582	1217	2100	1500	3300	150	3030	1010	840	800	400	8×21

HPMA model	DIMENSIONS (mm)																							
	kW	kg P.	kg M.	kg Tot.	Dn_1	Dn_2	a	f	h_2	L	g_1	g_2	h_1	h_3	l_1	l_2	m	m_1	m_2	m_3	n	n_1	n_2	s
150/1	30	727	255	1160	250	150	175	660	420	1721	40	110	533	836	945	771	1780	150	1480	740	720	680	340	6×21
	37	727	269	1174	250	150	175	660	420	1765	40	110	533	845	945	815	1780	150	1480	740	720	680	340	6×21
	45	727	353	1258	250	150	175	660	420	1770	40	110	533	845	945	820	1780	150	1480	740	720	680	340	6×21
	55	727	450	1355	250	150	175	660	420	1860	40	110	533	888	945	910	1780	150	1480	740	720	680	340	6×21
	75	727	605	1510	250	150	175	660	420	1935	40	110	533	931	945	985	1780	150	1480	740	720	680	340	6×21
150/2	2,2	863	605	1657	250	150	310	660	420	2070	40	110	553	951	1080	985	2100	150	1800	900	720	680	340	6×21
	90	863	700	1752	250	150	310	660	420	2120	40	110	553	951	1080	1035	2100	150	1800	900	720	680	340	6×21
	110	863	925	1977	250	150	310	660	420	2245	40	110	553	1083	1080	1160	2100	150	1800	900	720	680	340	6×21
	132	863	1180	2232	250	150	310	660	420	2275	40	110	553	1083	1080	1190	2100	150	1800	900	720	680	340	6×21
150/3	90	999	700	1902	250	150	445	660	420	2255	40	110	553	951	1215	1035	2240	150	1940	960	720	680	340	6×21
	110	999	925	2127	250	150	445	660	420	2380	40	110	553	1083	1215	1160	2240	150	1940	960	720	680	340	6×21
	132	999	1180	2382	250	150	445	660	420	2410	40	110	553	1083	1215	1190	2240	150	1940	960	720	680	340	6×21
	160	999	1161	2363	250	150	445	660	420	2540	40	110	553	1083	1215	1320	2240	150	1940	960	720	680	340	6×21
	200	999	1241	2443	250	150	445	660	420	2540	40	110	553	1083	1215	1320	2240	150	1940	960	720	680	340	6×21
150/4	160	1135	1161	2516	250	150	580	660	420	2675	40	110	573	1103	1350	1320	2550	150	2250	750	840	800	400	8×21
	200	1135	1241	2596	250	150	580	660	420	2675	40	110	573	1103	1350	1320	2550	150	2250	750	840	800	400	8×21
	250	1135	1870	3225	250	150	580	660	420	2855	40	110	573	1228	1350	1500	2550	150	2250	750	840	800	400	8×21
	315	1135	2090	3445	250	150	580	660	420	2855	40	110	573	1228	1350	1500	2550	150	2250	750	840	800	400	8×21
150/5	200	1271	1241	2750	250	150	715	660	420	2810	40	110	573	1103	1485	1320	2670	150	2370	990	840	800	400	8×21
	250	1271	1870	3379	250	150	715	660	420	2990	40	110	573	1228	1485	1500	2670	150	2370	990	840	800	400	8×21
	315	1271	2090	3599	250	150	715	660	420	2990	40	110	573	1228	1485	1500	2670	150	2370	990	840	800	400	8×21
	365	1271	2050	3559	250	150	715	660	420	3300	40	110	573	1118	1485	1810	2670	150	2370	990	840	800	400	8×21
150/6	250	1407	1870	3532	250	150	850	660	420	3125	40	110	573	1228	1620	1500	2820	150	2520	840	840	800	400	8×21
	315	1407	2090	3752	250	150	850	660	420	3125	40	110	573	1228	1620	1500	2820	150	2520	840	840	800	400	8×21
	365	1407	2050	3712	250	150	850	660	420	3435	40	110	573	1118	1620	1810	2820	150	2520	840	840	800	400	8×21
	400	1407	2350	4012	250	150	850	660	420	3610	40	110	573	1148	1620	1985	2820	150	2520	840	840	800	400	8×21
150/7	315	1543	2090	3906	250	150	985	660	420	3260	40	110	573	1228	1755	1500	2940	150	2640	880	840	800	400	8×21
	365	1543	2050	3866	250	150	985	660	420	3570	40	110	573	1118	1755	1810	2940	150	2640	880	840	800	400	8×21
	400	1543	2350	4166	250	150	985	660	420	3745	40	110	573	1148	1755	1985	2940	150	2640	880	840	800	400	8×21
	470	1543	2550	4366	250	150	985	660	420	3745	40	110	573	1148	1755	1985	2940	150	2640	880	840	800	400	8×21
	560	1543	2750	4566	250	150	985	660	420	3745	40	110	573	1148	1755	1985	2940	150	2640	880	840	800	400	8×21
150/8	365	1679	2050	4016	250	150	1120	660	420	3705	40	110	593	1138	1890	1810	3090	150	2790	930	840	800	400	8×21
	400	1679	2350	4316	250	150	1120	660	420	3880	40	110	593	1168	1890	1985	3090	150	2790	930	840	800	400	8×21
	470	1679	2090	4056	250	150	1120	660	420	3880	40	110	593	1168	1890	1985	3090	150	2790	930	840	800	400	8×21
	560	1679	2050	4016	250	150	1120	660	420	3880	40	110	593	1168	1890	1985	3090	150	2790	930	840	800	400	8×21
	600	1679	3400	5366	250	150	1120	660	420	4020	40	110	652	1262	1890	2125	3540	150	3240	1080	980	940	470	8×21
150/9	400	1815	2350	4465	250	150	1255	660	420	4015	40	110	593	1168	2025	1985	3210	150	2910	970	840	800	400	8×21
	470	1815	2090	4205	250	150	1255	660	420	4015	40	110	593	1168	2025	1985	3210	150	2910	970	840	800	400	8×21
	560	1815	2050	4165	250	150	1255	660	420	4015	40	110	652	1227	2025	1985	3660	150	3360	1120	980	940	470	8×21
	600	1815	3400	5515	250	150	1255	660	420	4155	40	110	652	1262	2025	2125	3660	150	3360	1120	980	940	470	8×21
150/10	470	1951	2090	4363	250	150	1390	660	420	4150	40	110	593	1168	2160	1985	3360	150	3060	1020	840	800	400	8×21
	560	1951	2050	4323	250	150	1390	660	420	4150	40	110	593	1168	2160	1985	3360	150	3060	1020	840	800	400	8×21
	600	1951	3400	5673	250	150	1390	660	420	4290	40	110	652	1262	2160	2125	3810	150	3510	1170	980	940	470	8×21
	680	1951	3600	5873	250	150	1390	660	420	4290	40	110	652	1262	2160	2125	3810	150	3510	1170	980	940	470	8×21

HPMA 25

2.950 rpm - Oil lubrication

HPMA model	DIMENSIONS (mm)																							
	kW	kg P.	kg M.	kg Tot.	Dn_1	Dn_2	a	f	h_2	L	g_1	g_2	h_1	h_3	l_1	l_2	m	m_1	m_2	m_3	n	n_1	n_2	s
25/1	1,1	33	18	82	50	25	55	280	165	844	100	41	263	393	556	283	660	150	360	-	310	275	137,5	4×17
	1,5	33	23	87	50	25	55	280	165	891	100	41	263	408	556	330	660	150	360	-	310	275	137,5	4×17
	2,2	33	26	90	50	25	55	280	165	899	100	41	263	408	556	338	660	150	360	-	310	275	137,5	4×17
25/2	2,2	42	23	101	50	25	100	280	165	799	100	41	263	420	421	373	740	150	440	-	310	275	137,5	4×17
	3	42	26	104	50	25	100	280	165	799	100	41	263	420	421	373	740	150	440	-	310	275	137,5	4×17
	4	42	35	113	50	25	100	280	165	799	100	41	263	420	421	373	740	150	440	-	310	275	137,5	4×17
	5,5	42	43	121	50	25	100	280	165	816	100	41	263	440	421	390	740	150	440	-	310	275	137,5	4×17
25/3	4	51	35	129	50	25	145	280	165	844	100	41	283	420	466	373	800	150	500	-	320	280	140	4×19
	5,5	51	66	160	50	25	145	280	165	861	100	41	283	460	466	390	800	150	500	-	320	280	140	4×19
	7,5	51	73	167	50	25	145	280	165	931	100	41	283	480	466	460	860	150	860	-	320	280	140	4×19
25/4	7,5	60	73	176	50	25	190	280	165	976	100	41	283	480	511	460	920	150	620	-	320	280	140	4×19
	11	60	120	223	50	25	190	280	165	1012	100	41	283	480	511	496	920	150	620	-	320	280	140	4×19
25/5	11	69	120	240	50	25	235	280	165	1057	100	41	283	480	556	496	960	150	660	-	320	280	140	4×19
25/6	11	78	120	249	50	25	280	280	165	1102	100	41	283	480	601	496	1000	150	700	-	320	280	140	4×19
	15	78	132	261	50	25	280	280	165	1221	100	41	318	573	601	615	1140	150	840	-	400	360	180	4×19
25/7	15	87	132	270	50	25	325	280	165	1266	100	41	318	573	646	615	1180	150	880	-	400	360	180	4×19
	18,5	87	150	288	50	25	325	280	165	1361	100	41	318	570	646	710	1180	150	880	-	400	360	180	4×19
25/8	15	96	132	296	50	25	370	280	165	1311	100	41	318	573	691	615	1220	150	920	-	400	360	180	4×19
	18,5	96	150	314	50	25	370	280	165	1406	100	41	318	570	691	710	1220	150	920	-	400	360	180	4×19
25/9	18,5	105	150	323	50	25	415	280	165	1451	100	41	318	570	736	710	1260	150	960	-	400	360	180	4×19
	22	105	205	378	50	25	415	280	165	1471	100	41	318	588	736	730	1340	150	1040	-	420	380	190	4×19
25/10	18,5	114	150	349	50	25	460	280	165	1496	100	41	318	570	781	710	1320	150	1020	-	400	360	180	4×19
	22	114	205	404	50	25	460	280	165	1516	100	41	318	588	781	730	1380	150	1080	-	420	380	190	4×19
25/11	22	123	205	413	50	25	505	280	165	1561	100	41	318	588	826	730	1420	150	1120	-	420	380	190	4×19
	30	123	250	458	50	25	505	280	165	1602	100	41	338	641	826	771	1460	150	1160	-	480	440	220	4×19
25/12	22	132	205	433	50	25	550	280	165	1606	100	41	318	588	871	730	1460	150	1160	-	420	380	190	4×19
	30	132	250	478	50	25	550	280	165	1647	100	41	338	641	871	771	1500	150	1200	-	480	440	220	4×19
25/13	30	141	250	487	50	25	595	280	165	1692	100	41	358	661	916	771	1560	150	1260	630	480	440	220	6×21
25/14	30	150	250	496	50	25	640	280	165	1737	100	41	358	661	961	771	1600	150	1300	650	480	440	220	6×21
25/15	30	159	250	518	50	25	685	280	165	1782	100	41	358	661	1006	771	1640	150	1340	670	480	440	220	6×21
	37	159	270	538	50	25	685	280	165	1782	100	41	358	661	1006	771	1640	150	1340	670	480	440	220	6×21
25/16	30	168	250	527	50	25	730	280	165	1827	100	41	358	661	1051	771	1700	150	1400	700	480	440	220	6×21
	37	168	270	547	50	25	730	280	165	1827	100	41	358	661	1051	771	1700	150	1400	700	480	440	220	6×21
25/17	37	177	270	556	50	25	775	280	165	1872	100	41	358	661	1096	771	1740	150	1440	720	480	440	220	6×21
25/18	37	186	270	576	50	25	820	280	165	1917	100	41	358	661	1141	771	1780	150	1480	740	480	440	220	6×21
	45	186	315	621	50	25	820	280	165	1996	100	41	383	695	1141	850	1800	150	1500	750	520	480	240	6×21
25/19	37	195	270	585	50	25	865	280	165	1962	100	41	358	661	1186	771	1820	150	1520	760	480	440	220	6×21
	45	195	315	630	50	25	865	280	165	2041	100	41	383	695	1186	850	1860	150	1560	780	520	480	240	6×21
25/20	37	204	270	609	50	25	910	280	165	2007	100	41	358	661	1231	771	1880	150	1580	790	480	440	220	6×21
	45	204	315	654	50	25	910	280	165	2086	100	41	383	695	1231	850	1900	150	1600	800	520	480	240	6×21

HPMA model	DIMENSIONS (mm)																							
	kW	kg P.	kg M.	kg Tot.	Dn_1	Dn_2	a	f	h_2	L	g_1	g_2	h_1	h_3	l_1	l_2	m	m_1	m_2	m_3	n	n_1	n_2	s
32/1	2,2	61	26	115	50	32	70	300	200	1030	90	237	303	448	667	358	740	150	440	-	320	280	140	4×19
	3	61	26	115	50	32	70	300	200	1065	90	237	303	460	667	393	740	150	440	-	320	280	140	4×19
	4	61	35	124	50	32	70	300	200	1082	90	237	303	480	667	410	740	150	440	-	320	280	140	4×19
	5,5	61	43	132	50	32	70	420	200	975	90	70	303	480	560	410	860	150	560	-	320	280	140	4×19
	7,5	61	73	162	50	32	70	420	200	1045	90	70	303	500	560	480	940	150	640	-	320	280	140	4×19
32/2	4	76	35	172	50	32	125	300	200	1077	90	237	303	480	662	410	880	150	580	-	320	280	140	4×19
	5,5	76	43	180	50	32	125	300	200	1077	90	237	303	480	662	410	880	150	580	-	320	280	140	4×19
	7,5	76	73	210	50	32	125	300	200	1077	90	237	303	480	662	410	880	150	580	-	320	280	140	4×19
	11	76	120	257	50	32	125	300	200	1147	90	237	303	500	662	480	880	150	580	-	320	280	140	4×19
	15	76	132	269	50	32	125	300	200	1282	90	237	303	558	662	615	1000	150	700	-	360	320	160	4×19
32/3	11	91	120	261	50	32	180	300	200	1337	90	237	323	558	717	615	1060	150	760	-	360	320	160	4×19
	15	91	132	273	50	32	180	300	200	1337	90	237	323	558	717	615	1060	150	760	-	360	320	160	4×19
	18,5	91	150	291	50	32	180	300	200	1432	90	237	323	575	717	710	1060	150	760	-	360	320	160	4×19
	22	91	205	346	50	32	180	300	200	1452	90	237	323	593	717	730	1140	150	840	-	440	400	200	4×19
32/4	15	106	132	305	50	32	235	300	200	1392	90	237	323	558	772	615	1180	150	880	-	440	400	200	4×19
	18,5	106	150	323	50	32	235	300	200	1487	90	237	323	575	772	710	1180	150	880	-	440	400	200	4×19
	22	106	205	378	50	32	235	300	200	1507	90	237	323	593	772	730	1180	150	880	-	440	400	200	4×19
	30	106	250	423	50	32	235	300	200	1548	90	237	338	641	772	771	1220	150	920	-	480	440	220	4×19
32/5	18,5	121	150	347	50	32	290	300	200	1542	90	237	338	575	827	710	1280	150	980	-	480	440	220	4×19
	22	121	205	402	50	32	290	300	200	1562	90	237	338	593	827	730	1280	150	980	-	480	440	220	4×19
	30	121	250	447	50	32	290	300	200	1603	90	237	338	641	827	771	1280	150	980	-	480	440	220	4×19
	37	121	270	467	50	32	290	300	200	1603	90	237	338	641	827	771	1280	150	980	-	480	440	220	4×19
32/6	30	136	250	504	50	32	345	300	200	1658	90	237	338	641	882	771	1340	150	1040	-	480	440	220	4×19
	37	136	270	524	50	32	345	300	200	1658	90	237	338	641	882	771	1340	150	1040	-	480	440	220	4×19
	45	136	315	569	50	32	345	300	200	1707	90	237	363	675	882	820	1360	150	1060	-	510	470	235	4×19
32/7	30	151	250	505	50	32	400	300	200	1713	90	237	338	641	937	771	1400	150	1100	-	480	440	220	4×19
	37	151	270	525	50	32	400	300	200	1713	90	237	338	641	937	771	1400	150	1100	-	480	440	220	4×19
	45	151	315	570	50	32	400	300	200	1762	90	237	363	641	937	820	1420	150	1120	-	510	470	235	4×19
	55	151	420	675	50	32	400	300	200	1852	90	237	393	748	937	910	1500	150	1200	-	560	520	260	4×19
32/8	37	166	270	557	50	32	455	300	200	1768	90	237	363	641	992	771	1480	150	1180	-	510	470	235	4×19
	45	166	315	602	50	32	455	300	200	1817	90	237	363	641	992	820	1480	150	1180	-	510	470	235	4×19
	55	166	420	707	50	32	455	300	200	1907	90	237	413	748	992	910	1560	150	1260	630	580	530	265	6×21
32/9	45	181	315	660	50	32	510	300	200	1872	90	237	413	641	1047	820	1620	150	1320	660	580	530	265	6×21
	55	181	420	765	50	32	510	300	200	1962	90	237	413	748	1047	910	1620	150	1320	660	580	530	265	6×21
	75	181	551	896	50	32	510	300	200	2037	90	237	443	841	1047	985	1720	150	1420	710	640	590	295	6×21
32/10	45	196	315	679	50	32	565	300	200	2017	90	237	413	641	1102	910	1680	150	1380	690	580	530	265	6×21
	55	196	420	784	50	32	565	300	200	2017	90	237	413	748	1102	910	1680	150	1380	690	580	530	265	6×21
	75	196	551	915	50	32	565	300	200	2092	90	237	443	841	1102	985	1780	150	1480	740	640	590	295	6×21
32/11	45	211	315	697	50	32	620	300	200	2072	90	237	443	641	1157	910	1820	150	1520	760	640	590	295	6×21
	55	211	420	802	50	32	620	300	200	2072	90	237	443	748	1157	910	1820	150	1520	760	640	590	295	6×21
	75	211	551	933	50	32	620	300	200	2147	90	237	443	841	1157	985	1820	150	1520	760	640	590	295	6×21
32/12	55	226	420	797	50	32	675	300	200	2127	90	237	443	748	1212	910	1880	150	1580	790	640	590	295	6×21
	75	226	551	928	50	32	675	300	200	2202	90	237	443	841	1212	985	1880	150	1580	790	640	590	295	6×21
	90	226	625	1002	50	32	675	300	200	2252	90	237	443	841	1212	1035	1880	150	1580	790	640	590	295	6×21
32/13	55	241	420	816	50	32	730	300	200	2182	90	237	443	748	1267	910	1940	150	1640	820	640	590	295	6×21
	75	241	551	947	50	32	730	300	200	2257	90	237	443	841	1267	985	1940	150	1640	820	640	590	295	6×21
	90	241	625	1021	50	32	730	300	200	2307	90	237	443	841	1267	1035	1940	150	1640	820	640	590	295	6×21

HPMA 50

2.950 rpm - Oil lubrication

HPMA model	DIMENSIONS (mm)																							
	kW	kg P.	kg M.	kg Tot.	Dn_1	Dn_2	a	f	h_2	L	g_1	g_2	h_1	h_3	l_1	l_2	m	m_1	m_2	m_3	n	n_1	n_2	s
50/1	5,5	76	43	183	100	50	90	465	225	1037	90	67	318	455	622	410	1140	150	840	-	440	400	200	4×19
	7,5	76	73	213	100	50	90	465	225	1107	90	67	318	535	622	480	1140	150	840	-	440	400	200	4×19
	11	76	120	260	100	50	90	465	225	1242	90	67	318	593	622	615	1140	150	840	-	440	400	200	4×19
	15	76	132	272	100	50	90	465	225	1242	90	67	318	593	622	615	1140	150	840	-	440	400	200	4×19
	18,5	76	150	290	100	50	90	465	225	1337	90	67	318	590	622	710	1140	150	840	-	440	400	200	4×19
50/2	11	95	120	285	100	50	220	465	225	1372	90	67	338	593	752	615	1380	150	1040	-	440	400	200	4×19
	15	95	132	297	100	50	220	465	225	1372	90	67	338	593	752	615	1380	150	1040	-	440	400	200	4×19
	18,5	95	150	315	100	50	220	465	225	1467	90	67	338	590	752	710	1380	150	1040	-	440	400	200	4×19
	22	95	205	370	100	50	220	465	225	1487	90	67	338	608	752	730	1380	150	1040	-	440	400	200	4×19
	30	95	250	415	100	50	220	465	225	1528	90	67	338	641	752	771	1380	150	1060	-	480	440	220	4×19
	37	95	270	435	100	50	220	465	225	1528	90	67	338	641	752	771	1380	150	1060	-	480	440	220	4×19
50/3	22	114	205	403	100	50	282	465	225	1549	90	67	338	608	814	730	1440	150	1140	-	480	440	220	4×19
	30	114	250	448	100	50	282	465	225	1590	90	67	338	641	814	771	1440	150	1140	-	480	440	220	4×19
	37	114	270	468	100	50	282	465	225	1590	90	67	338	641	814	771	1440	150	1140	-	480	440	220	4×19
	45	114	315	513	100	50	282	465	225	1639	90	67	368	680	814	820	1460	150	1160	-	520	480	240	4×19
50/4	30	133	250	484	100	50	344	465	225	1652	90	67	388	671	876	771	1520	150	1220	610	520	480	240	6×21
	37	133	270	504	100	50	344	465	225	1652	90	67	388	671	876	771	1520	150	1220	610	520	480	240	6×21
	45	133	315	549	100	50	344	465	225	1701	90	67	388	680	876	820	1520	150	1220	610	520	480	240	6×21
	55	133	420	654	100	50	344	465	225	1701	90	67	388	680	876	820	1520	150	1220	610	520	480	240	6×21
	75	133	551	785	100	50	344	465	225	1791	90	67	428	783	876	910	1620	150	1320	660	580	540	270	6×21
	90	133	625	859	100	50	344	465	225	1866	90	67	448	846	876	985	1720	150	1420	710	640	600	300	6×21
50/5	37	152	270	539	100	50	406	465	225	1714	90	67	428	711	938	771	1680	150	1380	690	570	530	265	6×21
	45	152	315	584	100	50	406	465	225	1763	90	67	428	720	938	820	1680	150	1380	690	570	530	265	6×21
	55	152	420	689	100	50	406	465	225	1853	90	67	428	783	938	910	1680	150	1380	690	570	530	265	6×21
	75	152	551	820	100	50	406	465	225	1928	90	67	448	846	938	985	1780	150	1480	740	640	600	300	6×21
	90	152	625	894	100	50	406	465	225	1978	90	67	448	846	938	1035	1780	150	1480	740	640	600	300	6×21
50/6	45	171	315	614	100	50	468	465	225	1825	90	67	448	760	1000	820	1840	150	1540	770	640	600	300	6×21
	55	171	420	719	100	50	468	465	225	1915	90	67	448	803	1000	910	1840	150	1540	770	640	600	300	6×21
	75	171	551	850	100	50	468	465	225	1990	90	67	448	846	1000	985	1840	150	1540	770	640	600	300	6×21
	90	171	625	924	100	50	468	465	225	2040	90	67	448	846	1000	1035	1840	150	1540	770	640	600	300	6×21
	110	171	968	1267	100	50	468	465	225	2165	90	67	488	1018	1000	1160	1980	150	1680	840	680	640	320	6×21
50/7	55	190	420	755	100	50	530	465	225	1977	90	67	448	803	1062	910	1900	150	1600	800	640	600	300	6×21
	75	190	551	886	100	50	530	465	225	2052	90	67	448	846	1062	985	1900	150	1600	800	640	600	300	6×21
	90	190	625	960	100	50	530	465	225	2102	90	67	448	846	1062	1035	1900	150	1600	800	640	600	300	6×21
	110	190	968	1303	100	50	530	465	225	2227	90	67	508	1018	1062	1160	2040	150	1740	870	700	660	330	6×21
50/8	75	209	551	923	100	50	592	465	225	2114	90	67	448	846	1124	985	1960	150	1660	830	640	600	300	6×21
	90	209	625	997	100	50	592	465	225	2164	90	67	448	846	1124	1035	1960	150	1660	830	640	600	300	6×21
	110	209	968	1340	100	50	592	465	225	2289	90	67	508	1038	1124	1160	2100	150	1800	900	700	660	330	6×21
	132	209	1100	1472	100	50	592	465	225	2319	90	67	508	1038	1124	1190	2100	150	1800	900	700	660	330	6×21
50/9	75	228	551	953	100	50	654	465	225	2176	90	67	468	846	1186	985	2040	150	1740	870	640	600	300	6×21
	90	228	625	1027	100	50	654	465	225	2226	90	67	468	846	1186	1035	2040	150	1740	870	640	600	300	6×21
	110	228	968	1370	100	50	654	465	225	2351	90	67	508	1038	1186	1160	2160	150	1860	930	700	660	330	6×21
	132	228	1100	1502	100	50	654	465	225	2381	90	67	508	1038	1186	1190	2160	150	1860	930	700	660	330	6×21
	160	228	1161	1563	100	50	654	465	225	2511	90	67	508	1038	1186	1320	2160	150	1860	930	700	660	330	6×21
50/10	90	247	625	1062	100	50	716	465	225	2288	90	67	508	906	1248	1035	2220	150	1920	960	700	660	330	6×21
	110	247	968	1405	100	50	716	465	225	2413	90	67	508	1038	1248	1160	2220	150	1920	960	700	660	330	6×21
	132	247	1100	1537	100	50	716	465	225	2443	90	67	508	1038	1248	1190	2220	150	1920	960	700	660	330	6×21
	160	247	1161	1598	100	50	716	465	225	2573	90	67	508	1038	1248	1320	2220	150	1920	960	700	660	330	6×21
50/11	90	266	625	1102	100	50	778	465	225	2350	90	67	508	906	1310	1035	2300	150	2000	1000	700	660	330	6×21
	110	266	968	1445	100	50	778	465	225	2475	90	67	508	1038	1310	1160	2300	150	2000	1000	700	660	330	6×21
	132	266	1100	1577	100	50	778	465	225	2505	90	67	508	1038	1310	1190	2300	150	2000	1000	700	660	330	6×21
	160	266	1161	1638	100	50	778	465	225	2635	90	67	508	1038	1310	1320	2300	150	2000	1000	700	660	330	6×21
	200	266	1221	1698	100	50	778	465	225	2635	90	67	508	1038	1310	1320	2300	150	2000	1000	700	660	330	6×21

HPMA 80

2.950 rpm - Oil lubrication

HPMA model	DIMENSIONS (mm)																							
	kW	kg P.	kg M.	kg Tot.	Dn_1	Dn_2	a	f	h_2	L	g_1	g_2	h_1	h_3	l_1	l_2	m	m_1	m_2	m_3	n	n_1	n_2	s
80/1	11	120	120	319	125	80	120	485	250	1290	80	65	363	618	670	615	1300	150	1000	-	480	440	220	4×19
	15	120	132	331	125	80	120	485	250	1290	80	65	363	618	670	615	1300	150	1000	-	480	440	220	4×19
	18,5	120	150	349	125	80	120	485	250	1385	80	65	363	615	670	710	1300	150	1000	-	480	440	220	4×19
	22	120	205	404	125	80	120	485	250	1290	80	65	363	633	670	615	1300	150	1000	-	480	440	220	4×19
	30	120	250	449	125	80	120	485	250	1446	80	65	363	666	670	771	1300	150	1000	-	480	440	220	4×19
80/2	22	149	205	449	125	80	195	485	250	1365	80	65	393	663	745	615	1500	150	1200	-	580	540	270	4×19
	30	149	250	494	125	80	195	485	250	1521	80	65	393	696	745	771	1500	150	1200	-	580	540	270	4×19
	37	149	270	514	125	80	195	485	250	1521	80	65	393	696	745	771	1500	150	1200	-	580	540	270	4×19
	45	149	315	559	125	80	195	485	250	1570	80	65	393	705	745	820	1500	150	1200	-	580	540	270	4×19
	55	149	420	664	125	80	195	485	250	1660	80	65	393	748	745	910	1500	150	1200	-	580	540	270	4×19
	75	149	551	795	125	80	195	485	250	1735	80	65	453	851	745	985	1600	150	1300	650	640	600	300	6×21
80/3	45	178	315	606	125	80	270	485	250	1645	80	65	453	765	820	820	1680	150	1380	690	640	600	300	6×21
	55	178	420	711	125	80	270	485	250	1735	80	65	453	765	820	910	1680	150	1380	690	640	600	300	6×21
	75	178	551	842	125	80	270	485	250	1810	80	65	453	851	820	985	1680	150	1380	690	640	600	300	6×21
	90	178	625	916	125	80	270	485	250	1860	80	65	453	851	820	1035	1680	150	1380	690	640	600	300	6×21
80/4	75	207	551	887	125	80	345	485	250	1885	80	65	493	848	895	985	1900	150	1600	800	700	660	330	6×21
	90	207	625	961	125	80	345	485	250	1935	80	65	493	891	895	1035	1900	150	1600	800	700	660	330	6×21
	110	207	968	1304	125	80	345	485	250	2060	80	65	493	1023	895	1160	1900	150	1600	800	700	660	330	6×21
	132	207	1100	1436	125	80	345	485	250	2090	80	65	493	1023	895	1190	1900	150	1600	800	700	660	330	6×21
80/5	90	236	625	1009	125	80	420	485	250	2010	80	65	493	891	970	1035	1960	150	1660	830	700	660	330	6×21
	110	236	968	1352	125	80	420	485	250	2135	80	65	493	1023	970	1160	1960	150	1660	830	700	660	330	6×21
	132	236	1100	1484	125	80	420	485	250	2165	80	65	493	1023	970	1190	1960	150	1660	830	700	660	330	6×21
	160	236	1161	1545	125	80	420	485	250	2295	80	65	493	1023	970	1320	1960	150	1660	830	700	660	330	6×21
80/6	110	265	968	1403	125	80	495	485	250	2210	80	65	513	1023	1045	1160	2040	150	1740	870	720	680	340	6×21
	132	265	1100	1535	125	80	495	485	250	2240	80	65	513	1023	1045	1190	2040	150	1740	870	720	680	340	6×21
	160	265	1161	1596	125	80	495	485	250	2370	80	65	513	1043	1045	1320	2040	150	1740	870	720	680	340	6×21
	200	265	1221	1656	125	80	495	485	250	2370	80	65	513	1043	1045	1320	2040	150	1740	870	720	680	340	6×21
80/7	132	294	1100	1590	125	80	570	485	250	2315	80	65	513	1023	1120	1190	2120	150	1820	910	720	680	340	6×21
	160	294	1161	1651	125	80	570	485	250	2445	80	65	513	1043	1120	1320	2120	150	1820	910	720	680	340	6×21
	200	294	1221	1711	125	80	570	485	250	2445	80	65	513	1043	1120	1320	2120	150	1820	910	720	680	340	6×21
	250	294	2090	2580	125	80	570	485	250	2625	80	65	553	1208	1120	1500	2300	150	2000	1000	820	780	390	6×21
80/8	160	323	1161	1709	125	80	645	485	250	2520	80	65	513	1043	1195	1320	2200	150	1900	950	700	660	330	6×21
	200	323	1221	1769	125	80	645	485	250	2520	80	65	513	1043	1195	1320	2200	150	1900	950	700	660	330	6×21
	250	323	2090	2638	125	80	645	485	250	2700	80	65	553	1208	1195	1500	2360	150	2060	1030	820	780	390	6×21
80/9	200	352	1221	1825	125	80	720	485	250	2595	80	65	553	1043	1270	1320	2460	150	2160	1080	820	780	390	6×21
	250	352	2090	2694	125	80	720	485	250	2775	80	65	553	1208	1270	1500	2460	150	2160	1080	820	780	390	6×21
	315	352	2530	3134	125	80	720	485	250	2775	80	65	553	1208	1270	1500	2460	150	2160	1080	820	780	390	6×21

HPMA 100

2.950 rpm - Oil lubrication

HPMA model	DIMENSIONS (mm)																							
	kW	kg P.	kg M.	kg Tot.	Dn_1	Dn_2	a	f	h_2	L	g_1	g_2	h_1	h_3	l_1	l_2	m	m_1	m_2	m_3	n	n_1	n_2	s
100/1	22	197	205	513	150	100	145	545	315	1385	70	75	443	663	765	615	1620	150	1320	660	640	600	300	6×21
	30	197	250	558	150	100	145	545	315	1541	70	75	443	696	765	771	1620	150	1320	660	640	600	300	6×21
	37	197	270	578	150	100	145	545	315	1541	70	75	443	696	765	771	1620	150	1320	660	640	600	300	6×21
	45	197	315	623	150	100	145	545	315	1590	70	75	443	705	765	820	1620	150	1320	660	640	600	300	6×21
	55	197	420	728	150	100	145	545	315	1680	70	75	443	748	765	910	1620	150	1320	660	640	600	300	6×21
	75	197	551	859	150	100	145	545	315	1755	70	75	443	841	765	985	1620	150	1320	660	640	600	300	6×21
100/2	55	242	420	810	150	100	235	545	315	1680	70	75	503	815	855	820	1840	150	1540	770	740	700	350	6×21
	75	242	551	941	150	100	235	545	315	1770	70	75	503	858	855	910	1840	150	1540	770	740	700	350	6×21
	90	242	625	1015	150	100	235	545	315	1845	70	75	503	901	855	985	1840	150	1540	770	740	700	350	6×21
	110	242	968	1358	150	100	235	545	315	2020	70	75	503	1033	855	1160	1840	150	1540	770	740	700	350	6×21
	132	242	1100	1490	150	100	235	545	315	2050	70	75	503	1033	855	1190	1840	150	1540	770	740	700	350	6×21
100/3	90	287	625	1089	150	100	325	545	315	1935	70	75	503	901	945	985	1940	150	1640	810	740	700	350	6×21
	110	287	968	1432	150	100	325	545	315	2110	70	75	503	1033	945	1160	1940	150	1640	810	740	700	350	6×21
	132	287	1100	1564	150	100	325	545	315	2140	70	75	503	1033	945	1190	1940	150	1640	810	740	700	350	6×21
	160	287	1161	1625	150	100	325	545	315	2270	70	75	503	1033	945	1320	1940	150	1640	810	740	700	350	6×21
	200	287	1221	1685	150	100	325	545	315	2270	70	75	503	1033	945	1320	1940	150	1640	810	740	700	350	6×21
100/4	160	332	1161	1696	150	100	415	545	315	2360	70	75	513	1033	1035	1320	2020	150	1720	860	740	700	350	6×21
	200	332	1221	1700	150	100	415	545	315	2360	70	75	513	1033	1035	1320	2020	150	1720	860	740	700	350	6×21
	250	332	2090	2539	150	100	415	545	315	2540	70	75	563	1218	1035	1500	2200	150	1900	950	820	780	390	6×21
100/5	160	377	1161	3406	150	100	505	545	315	2450	70	75	563	1093	1125	1320	2300	150	2000	1000	820	780	390	6×21
	200	377	1221	3406	150	100	505	545	315	2450	70	75	563	1093	1125	1320	2300	150	2000	1000	820	780	390	6×21
	250	377	2090	2591	150	100	505	545	315	2630	70	75	563	1218	1125	1500	2300	150	2000	1000	820	780	390	6×21
	315	377	2530	2991	150	100	505	545	315	2630	70	75	563	1218	1125	1500	2300	150	2000	1000	820	780	390	6×21
100/6	250	422	2090	3406	150	100	595	545	315	2720	70	75	563	1218	1215	1500	2380	150	2080	1040	820	780	390	6×21
	315	422	2530	3043	150	100	595	545	315	2720	70	75	563	1218	1215	1500	2380	150	2080	1040	820	780	390	6×21
	355	422	2000	2493	150	100	595	545	315	3010	70	75	563	1167	1215	1790	2380	150	2080	1040	820	780	390	6×21
	400	422	2300	2813	150	100	595	545	315	1930	70	75	563	1167	1215	1930	2380	150	2080	1040	820	780	390	6×21

HPMA 125

2.950 rpm - Oil lubrication

HPMA model	DIMENSIONS (mm)																							
	kW	kg P.	kg M.	kg Tot.	Dn_1	Dn_2	a	f	h_2	L	g_1	g_2	h_1	h_3	l_1	l_2	m	m_1	m_2	m_3	n	n_1	n_2	s
125/1	90	343	625	1156	200	125	155	650	350	1880	50	85	482	880	890	985	1900	150	1600	800	740	700	350	6×21
	110	343	968	1499	200	125	155	650	350	2055	50	85	482	1012	890	1160	1900	150	1600	800	740	700	350	6×21
	132	343	1100	1631	200	125	155	650	350	2085	50	85	482	1012	890	1190	1900	150	1600	800	740	700	350	6×21
	160	343	1161	1692	200	125	155	650	350	2215	50	85	482	1012	890	1320	1900	150	1600	800	740	700	350	6×21
	200	343	1221	1752	200	125	155	650	350	2215	50	85	482	1012	890	1320	1900	150	1600	800	740	700	350	6×21
125/2	160	424	1161	1799	200	125	265	650	350	2325	50	85	542	1072	1000	1320	2180	150	1880	940	820	780	390	6×21
	200	424	1221	1859	200	125	265	650	350	2325	50	85	542	1072	1000	1320	2180	150	1880	940	820	780	390	6×21
	250	424	2090	2728	200	125	265	650	350	2505	50	85	542	1197	1000	1500	2180	150	1880	940	820	780	390	6×21
	315	424	2530	3168	200	125	265	650	350	2505	50	85	542	1197	1000	1500	2180	150	1880	940	820	780	390	6×21
	355	424	2000	2638	200	125	265	650	350	2795	50	85	542	1087	1000	1790	2180	150	1880	940	820	780	390	6×21
	400	424	2300	2938	200	125	265	650	350	2935	50	85	542	1117	1000	1930	2180	150	1880	940	820	780	390	6×21
125/3	315	505	2530	3277	200	125	375	650	350	2615	50	85	542	1197	1110	1500	2280	150	1980	990	820	780	390	6×21
	355	505	2000	2747	200	125	375	650	350	2905	50	85	542	1087	1110	1790	2280	150	1980	990	820	780	390	6×21
	400	505	2300	3047	200	125	375	650	350	3045	50	85	542	1117	1110	1930	2280	150	1980	990	820	780	390	6×21
	450	505	2400	3147	200	125	375	650	350	3045	50	85	542	1117	1110	1930	2280	150	1980	990	820	780	390	6×21
	510	505	2550	3297	200	125	375	650	350	3045	50	85	542	1117	1110	1930	2280	150	1980	990	820	780	390	6×21
	560	505	3150	3897	200	125	375	650	350	3210	50	85	542	1152	1110	2095	2280	150	1980	990	820	780	390	6×21
	650	505	3300	4047	200	125	375	650	350	3210	50	85	612	1222	1110	2095	2700	150	2400	800	980	940	470	8×21
125/ 4	450	586	2400	3258	200	125	485	650	350	3155	50	85	612	1117	1220	1930	2790	150	2490	830	980	940	470	8×21
	510	586	2550	3408	200	125	485	650	350	3155	50	85	612	1117	1220	1930	2790	150	2490	830	980	940	470	8×21
	560	586	3150	4008	200	125	485	650	350	3320	50	85	612	1152	1220	2095	2790	150	2490	830	980	940	470	8×21
	650	586	3300	4158	200	125	485	650	350	3320	50	85	612	1222	1220	2095	2790	150	2490	830	980	940	470	8×21
	750	586	3550	4408	200	125	485	650	350	3320	50	85	612	1222	1220	2095	2790	150	2490	830	980	940	470	8×21
	820	586	4600	5458	200	125	485	650	350	3545	50	85	612	1262	1220	2320	2790	150	2490	830	980	940	470	8×21

HPMA 150

2.950 rpm - Oil lubrication

HPMA model	DIMENSIONS (mm)																							
	kW	kg P.	kg M.	kg Tot.	Dn_1	Dn_2	a	f	h_2	L	g_1	g_2	h_1	h_3	l_1	l_2	m	m_1	m_2	m_3	n	n_1	n_2	s
150/1	200	727	1221	2175	250	150	175	660	420	2270	40	110	553	1083	945	1320	2100	150	1800	900	840	800	400	6×21
	250	727	2090	3044	250	150	175	660	420	2450	40	110	553	1208	945	1500	2100	150	1800	900	840	800	400	6×21
	315	727	2530	3484	250	150	175	660	420	2450	40	110	553	1208	945	1500	2100	150	1800	900	840	800	400	6×21
	355	727	2000	3013	250	150	175	660	420	2740	40	110	553	1098	945	1790	2100	150	1800	900	840	800	400	6×21
	400	727	2300	3313	250	150	175	660	420	2880	40	110	553	1128	945	1930	2100	150	1800	900	840	800	400	6×21
	450	727	2400	3413	250	150	175	660	420	2880	40	110	553	1128	945	1930	2100	150	1800	900	840	800	400	6×21
	510	727	2550	3563	250	150	175	660	420	2880	40	110	553	1128	945	1930	2100	150	1800	900	840	800	400	6×21
150/2	400	863	2300	3508	250	150	310	660	420	2875	40	110	682	1257	1080	1790	3000	150	2700	900	1080	1040	520	8×21
	450	863	2400	3608	250	150	310	660	420	3015	40	110	682	1257	1080	1930	3000	150	2700	900	1080	1040	520	8×21
	510	863	2550	3758	250	150	310	660	420	3015	40	110	682	1257	1080	1930	3000	150	2700	900	1080	1040	520	8×21
	560	863	3150	4358	250	150	310	660	420	3180	40	110	682	1292	1080	2095	3000	150	2700	900	1080	1040	520	8×21
	650	863	3300	4508	250	150	310	660	420	3180	40	110	682	1292	1080	2095	3000	150	2700	900	1080	1040	520	8×21
	750	863	3550	4807	250	150	310	660	420	3180	40	110	682	1292	1080	2095	3000	150	2700	900	1080	1040	520	8×21
	820	863	4600	5857	250	150	310	660	420	3405	40	110	682	1332	1080	2320	3000	150	2700	900	1080	1040	520	8×21
	940	863	4900	6226	250	150	310	660	420	3405	40	110	682	1332	1080	2320	3000	150	2700	900	1080	1040	520	8×21
	1030	863	5200	6526	250	150	310	660	420	3405	40	110	682	1332	1080	2320	3000	150	2700	900	1080	1040	520	8×21
	1200	863	6100	7426	250	150	310	660	420	3760	40	110	752	1432	1080	2675	3510	150	3210	1070	1220	1180	590	8×21

HPM/HPR

1.450 rpm
Oil lubrication

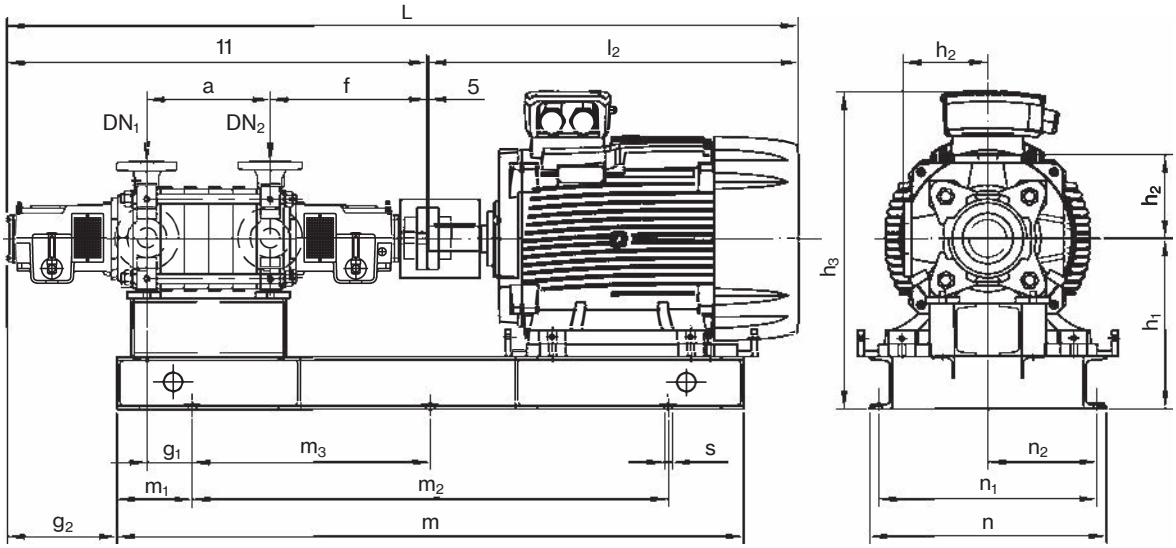

HPM/HPR 25

1.450 rpm - Oil lubrication

HPM/ HPR model	DIMENSIONS (mm)																							
	kW	kg P.	kg M.	kg Tot.	Dn_1	Dn_2	a	f	h_2	L	g_1	g_2	h_1	h_3	l_1	l_2	m	m_1	m_2	m_3	n	n_1	n_2	s
25/1	0,75	44	12	97	40	25	55	270,5	165	836,5	100	173	263	393	548,5	283	620	150	320	-	310	275	137,5	4×17
25/2	0,75	53	12	107	40	25	100	270,5	165	881,5	100	173	263	393	593,5	283	660	150	360	-	310	275	137,5	4×17
25/3	0,75	62	12	117	40	25	145	270,5	165	926,5	100	173	263	393	638,5	283	720	150	420	-	310	275	137,5	4×17
25/4	1,1	71	25	122,1	40	25	190	270,5	165	971,5	100	173	283	413	683,5	283	760	150	460	-	320	280	140	4×19
25/5	1,1	80	25	137,1	40	25	235	270,5	165	1016,5	100	173	283	413	728,5	283	800	150	500	-	320	280	140	4×19
	1,5	80	30	147	40	25	235	270,5	165	1071,5	100	173	283	428	728,5	338	840	150	540	-	320	280	140	4×19
25/6	1,5	89	30	158	40	25	280	270,5	165	1116,5	100	173	283	428	773,5	338	880	150	580	-	320	280	140	4×19
25/7	1,5	98	30	168	40	25	325	270,5	165	1161,5	100	173	283	428	818,5	338	920	150	620	-	320	280	140	4×19
	2,2	98	36	178	40	25	325	270,5	165	1196,5	100	173	283	440	818,5	373	960	150	660	-	320	280	140	4×19
25/8	2,2	107	36	188	40	25	370	270,5	165	1241,5	100	173	283	440	863,5	373	1000	150	700	-	320	280	140	4×19
25/9	2,2	116	36	207	40	25	415	270,5	165	1286,5	100	173	303	460	908,5	373	1040	150	740	-	330	290	145	4×19
	3	116	40	209	40	25	415	270,5	165	1286,5	100	173	303	460	908,5	373	1040	150	740	-	330	290	145	4×19
25/10	2,2	125	36	219	40	25	460	270,5	165	1331,5	100	173	303	460	953,5	373	1100	150	800	-	330	290	145	4×19
	3	125	40	221	40	25	460	270,5	165	1331,5	100	173	303	460	953,5	373	1100	150	800	-	330	290	145	4×19
25/11	3	134	40	232	40	25	505	270,5	165	1376,5	100	173	303	460	998,5	373	1140	150	840	-	330	290	145	4×19
25/12	3	143	40	243	40	25	550	270,5	165	1421,5	100	173	303	460	1043,5	373	1180	150	880	-	330	290	145	4×19
25/13	3	152	40	253	40	25	595	270,5	165	1466,5	100	173	303	460	1088,5	373	1220	150	920	-	330	290	145	4×19
	4	152	46	255	40	25	595	270,5	165	1483,5	100	173	303	480	1088,5	390	1240	150	940	-	360	320	160	4×19
25/14	3	161	40	265	40	25	640	270,5	165	1511,5	100	173	303	460	1133,5	373	1280	150	980	-	330	290	145	4×19
	4	161	46	268	40	25	640	270,5	165	1528,5	100	173	303	480	1133,5	390	1280	150	980	-	360	320	160	4×19
25/15	4	170	46	278	40	25	685	270,5	165	1573,5	100	173	303	480	1178,5	390	1320	150	1020	-	360	320	160	4×19
25/16	4	179	46	289	40	25	730	270,5	165	1618,5	100	173	303	480	1223,5	390	1360	150	1060	-	360	320	160	4×19
25/17	4	188	46	300	40	25	775	270,5	165	1663,5	100	173	303	480	1268,5	390	1420	150	1120	-	360	320	160	4×19
	5,5	188	70	317	40	25	775	270,5	165	1733,5	100	173	303	500	1268,5	460	1500	150	1200	-	360	320	160	4×19
25/18	4	197	46	311	40	25	820	270,5	165	1708,5	100	173	303	480	1313,5	390	1460	150	1160	-	360	320	160	4×19
	5,5	197	70	328	40	25	820	270,5	165	1778,5	100	173	323	520	1313,5	460	1540	150	1240	620	360	320	160	6×21
25/19	4	206	46	322	40	25	865	270,5	165	1753,5	100	173	303	480	1358,5	390	1500	150	1200	-	360	320	160	4×19
	5,5	206	70	352	40	25	865	270,5	165	1823,5	100	173	323	520	1358,5	460	1580	150	1280	640	360	320	160	6×21
25/20	5,5	215	70	363	40	25	910	270,5	165	1868,5	100	173	323	520	1403,5	460	1620	150	1320	660	360	320	160	6×21
25/21	5,5	224	70	375	40	25	955	270,5	165	1913,5	100	173	323	520	1448,5	460	1680	150	1380	690	360	320	160	6×21
25/22	5,5	233	70	386	40	25	1000	270,5	165	1958,5	100	173	323	520	1493,5	460	1720	150	1420	710	360	320	160	6×21
25/23	5,5	242	70	396	40	25	1045	270,5	165	2003,5	100	173	323	520	1538,5	460	1760	150	1460	730	360	320	160	6×21
	7,5	242	57	398	40	25	1045	270,5	165	2039,5	100	173	323	520	1538,5	496	1760	150	1460	730	360	320	160	6×21
25/24	5,5	251	70	407	40	25	1090	270,5	165	2048,5	100	173	323	520	1583,5	460	1800	150	1500	750	360	320	160	6×21
	7,5	251	57	409	40	25	1090	270,5	165	2084,5	100	173	323	520	1583,5	496	1800	150	1500	750	360	320	160	6×21
25/25	5,5	260	70	419	40	25	1135	270,5	165	2093,5	100	173	323	520	1628,5	460	1860	150	1560	780	360	320	160	6×21
	7,5	260	57	421	40	25	1135	270,5	165	2129,5	100	173	323	520	1628,5	496	1860	150	1560	780	360	320	160	6×21

HPM/ HPR model	DIMENSIONS (mm)																							
	kW	kg P.	kg M.	kg Tot.	Dn_1	Dn_2	a	f	h_2	L	g_1	g_2	h_1	h_3	l_1	l_2	m	m_1	m_2	m_3	n	n_1	n_2	s
32/1	0,75	77	12	152	50	32	70	404	200	1116	90	237	303	433	828	283	780	150	480	-	320	280	140	4×19
	1,1	77	25	158	50	32	70	404	200	1171	90	237	303	448	828	338	820	150	520	-	320	280	140	4×19
32/2	1,1	92	25	173	50	32	125	404	200	1226	90	237	303	448	883	338	860	150	560	-	320	280	140	4×19
	1,5	92	30	175	50	32	125	404	200	1226	90	237	303	448	883	338	860	150	560	-	320	280	140	4×19
	2,2	92	36	177	50	32	125	404	200	1261	90	237	303	460	883	373	900	150	600	-	320	280	140	4×19
32/3	1,5	107	30	193	50	32	180	404	200	1301	90	237	303	448	938	358	960	150	660	-	320	280	140	4×19
	2,2	107	36	199	50	32	180	404	200	1336	90	237	303	460	938	393	960	150	660	-	320	280	140	4×19
	3	107	40	203	50	32	180	404	200	1336	90	237	303	460	938	393	960	150	660	-	320	280	140	4×19
32/4	2,2	122	36	222	50	32	235	404	200	1391	90	237	303	460	993	393	1100	150	700	-	320	280	140	4×19
	3	122	40	226	50	32	235	404	200	1391	90	237	303	460	993	393	1100	150	700	-	320	280	140	4×19
	4	122	46	232	50	32	235	404	200	1408	90	237	323	500	993	410	1020	150	720	-	320	280	140	4×19
32/5	2,2	137	36	239	50	32	290	404	200	1446	90	237	323	460	1048	393	1060	150	760	-	320	280	140	4×19
	3	137	40	243	50	32	290	404	200	1446	90	237	323	460	1048	393	1060	150	760	-	320	280	140	4×19
	4	137	46	249	50	32	290	404	200	1463	90	237	323	500	1048	410	1080	150	780	-	320	280	140	4×19
32/6	3	152	40	254	50	32	345	404	200	1501	90	237	323	460	1103	393	1220	150	820	-	320	280	140	4×19
	4	152	46	260	50	32	345	404	200	1518	90	237	323	500	1103	410	1220	150	820	-	320	280	140	4×19
	5,5	152	70	284	50	32	345	404	200	1588	90	237	323	520	1103	480	1200	150	900	-	320	280	140	4×19
32/7	4	167	46	278	50	32	400	404	200	1573	90	237	323	500	1158	410	1260	150	960	-	320	280	140	4×19
	5,5	167	70	302	50	32	400	404	200	1643	90	237	323	520	1158	480	1260	150	960	-	320	280	140	4×19
32/8	4	182	46	310	50	32	455	404	200	1628	90	237	323	500	1213	410	1320	150	1020	-	320	280	140	4×19
	5,5	182	70	334	50	32	455	404	200	1698	90	237	323	520	1213	480	1320	150	1020	-	320	280	140	4×19
	7,5	182	57	321	50	32	455	404	200	1734	90	237	323	520	1213	516	1320	150	1020	-	320	280	140	4×19
32/9	5,5	197	70	325	50	32	510	404	200	1753	90	237	323	520	1268	480	1360	150	1060	-	320	280	140	4×19
	7,5	197	57	337	50	32	510	404	200	1789	90	237	343	520	1268	516	1360	150	1060	-	320	280	140	4×19
32/10	5,5	212	70	365	50	32	565	404	200	1808	90	237	343	520	1323	480	1520	150	1120	-	320	280	140	4×19
	7,5	212	57	377	50	32	565	404	200	1844	90	237	343	520	1323	516	1520	150	1120	-	320	280	140	4×19
	11	212	125	445	50	32	565	404	200	1943	90	237	343	598	1323	615	1540	150	1240	-	360	320	160	4×19
32/11	5,5	227	70	383	50	32	620	404	200	1863	90	237	343	520	1378	480	1480	150	1180	-	320	280	140	4×19
	7,5	227	57	395	50	32	620	404	200	1899	90	237	343	520	1378	516	1480	150	1180	-	320	280	140	4×19
	11	227	125	463	50	32	620	404	200	1998	90	237	343	598	1378	615	1600	150	1300	-	360	320	160	4×19
32/12	5,5	242	70	399	50	32	675	404	200	1918	90	237	343	520	1433	480	1540	150	1240	620	320	280	140	6×21
	7,5	242	57	411	50	32	675	404	200	1954	90	237	343	520	1433	516	1540	150	1240	620	320	280	140	6×21
	11	242	125	479	50	32	675	404	200	2053	90	237	343	598	1433	615	1660	150	1360	680	360	310	155	6×21
32/13	7,5	257	57	430	50	32	730	404	200	2009	90	237	343	520	1488	516	1720	150	1420	710	360	310	155	6×21
	11	257	125	498	50	32	730	404	200	2108	90	237	343	598	1488	615	1720	150	1420	710	360	310	155	6×21
32/14	7,5	272	57	447	50	32	785	404	200	2064	90	237	343	520	1543	516	1760	150	1460	730	360	310	155	6×21
	11	272	125	515	50	32	785	404	200	2163	90	237	343	598	1543	615	1760	150	1460	730	360	310	155	6×21
32/15	7,5	287	57	454	50	32	840	404	200	2119	90	237	343	520	1598	516	1820	150	1520	760	360	310	155	6×21
	11	287	125	522	50	32	840	404	200	2218	90	237	343	598	1598	615	1820	150	1520	760	360	310	155	6×21
	15	287	150	547	50	32	840	404	200	2313	90	237	343	595	1598	710	1820	150	1520	760	360	310	155	6×21
32/16	11	302	125	550	50	32	895	404	200	2273	90	237	343	598	1653	615	1880	150	1580	790	360	310	155	6×21
	15	302	150	564	50	32	895	404	200	2368	90	237	343	595	1653	710	1880	150	1580	790	360	310	155	6×21
32/17	11	317	125	568	50	32	950	404	200	2328	90	237	343	598	1708	615	1940	150	1640	820	360	310	155	6×21
	15	317	150	582	50	32	950	404	200	2423	90	237	343	595	1708	710	1940	150	1640	820	360	310	155	6×21
32/18	11	332	125	585	50	32	1005	404	200	2383	90	237	363	598	1763	615	1980	150	1680	840	360	310	155	6×21
	15	332	150	599	50	32	1005	404	200	2478	90	237	363	595	1763	710	1980	150	1680	840	360	310	155	6×21
32/19	11	347	125	617	50	32	1060	404	200	2438	90	237	363	598	1818	615	2040	150	1740	870	360	310	155	6×21
	15	347	150	631	50	32	1060	404	200	2533	90	237	363	595	1818	710	2040	150	1740	870	360	310	155	6×21
32/20	11	362	125	643	50	32	1115	404	200	2493	90	237	363	598	1873	615	2100	150	1800	900	360	310	155	6×21
	15	362	150	657	50	32	1115	404	200	2588	90	237	363	595	1873	710	2100	150	1800	900	360	310	155	6×21
	18,5	362	171	696	50	32	1115	404	200	2608	90	237	363	633	1873	730	2180	150	1880	940	450	400	200	6×21
32/21	11	377	125	660	50	32	1170	404	200	2548	90	237	363	598	1928	615	2160	150	1860	930	360	310	155	6×21
	15	377	150	674	50	32	1170	404	200	2643	90	237	363	595	1928	710	2160	150	1860	930	360	310	155	6×21
	18,5	377	171	713	50	32	1170	404	200	2663	90	237	363	633	1928	730	2240	150	1940	970	450	400	200	6×21
32/22	15	392	150	698	50	32	1225	404	200	2698	90	237	363	595	1983	710	2200	150	1900	950	360	310	155	6×21
	18,5	392	171	730	50	32	1225	404	200	2718	90	237	363	633	1983	730	2280	150	1980	990	450	400	200	6×21
32/23	15	407	150	717	50	32	1280	404	200	2753	90	237	363	595	2038	710	2260	150	1960	980	360	310	155	6×21
	18,5	407	171	749	50	32	1280	404	200	2773	90	237	363	633	2038	730	2340	150	2040	1020	450	400	200	6×21
32/24	15	422	150	736	50	32	1335	404	200	2808	90	237	363	595	2093	710	2320	150	2020	1010	360	310	155	6×21
	18,5	422	171	768	50	32	1335	404	200	2828	90	237	363	633	2093	730	2400	150	2100	1050	450	400	200	6×21
	22	422	190	786	50	32	1335	404	200	2878	90	237	363	633	2093	780	2400	150	2100	1050	450	400	200	6×21
32/25	15	437	150	754	50	32	1390	404	200	2863	90	237	363	595	2148	710	2380	150	2080	1040	360	310	155	6×21
	18,5	437	171	786	50	32	1390	404	200	2883	90	237	363	633	2148	730	2460	150	2160	1080	450	400	200	6×21
	22	437	190	804	50	32	1390	404	200	2933	90	237	363	633	2148	780	2460	150	2160	1080	450	400	200	6×21

HPM/HPR 50

1.450 rpm - Oil lubrication

HPM/ HPR model	DIMENSIONS (mm)																							
	kW	kg P.	kg M.	kg Tot.	Dn_1	Dn_2	a	f	h_2	L	g_1	g_2	h_1	h_3	l_1	l_2	m	m_1	m_2	m_3	n	n_1	n_2	s
50/1	1,1	104	25	201	80	50	90	449	225	1253	90	319	318	463	918	330	900	150	600	-	360	320	160	4×19
	1,5	104	30	206	80	50	90	449	225	1281	90	319	318	463	918	358	900	150	600	-	360	320	160	4×19
	2,2	104	36	212	80	50	90	449	225	1316	90	319	318	475	918	393	900	150	600	-	360	320	160	4×19
50/2	2,2	123	36	223	80	50	152	449	225	1378	90	319	318	475	980	393	960	150	660	-	360	320	160	4×19
	3	123	40	227	80	50	152	449	225	1378	90	319	318	475	980	393	960	150	660	-	360	320	160	4×19
	4	123	46	233	80	50	152	449	225	1395	90	319	318	495	980	410	980	150	680	-	360	320	160	4×19
50/3	3	142	40	257	80	50	214	449	225	1440	90	319	338	475	1042	393	1040	150	740	-	360	320	160	4×19
	4	142	46	263	80	50	214	449	225	1457	90	319	338	495	1042	410	1040	150	740	-	360	320	160	4×19
	5,5	142	70	287	80	50	214	449	225	1527	90	319	338	535	1042	480	1120	150	820	-	380	340	170	4×19
50/4	4	161	46	299	80	50	276	449	225	1519	90	319	338	515	1104	410	1180	150	880	-	380	340	170	4×19
	5,5	161	70	323	80	50	276	449	225	1589	90	319	338	535	1104	480	1180	150	880	-	380	340	170	4×19
	7,5	161	57	310	80	50	276	449	225	1625	90	319	338	535	1104	516	1180	150	880	-	380	340	170	4×19
50/5	5,5	180	70	355	80	50	338	449	225	1651	90	319	338	535	1166	480	1240	150	940	-	380	340	170	4×19
	7,5	180	57	342	80	50	338	449	225	1687	90	319	338	535	1166	516	1240	150	940	-	380	340	170	4×19
	11	180	125	410	80	50	338	449	225	1786	90	319	338	593	1166	615	1380	150	1080	-	380	340	170	4×19
50/6	5,5	199	70	376	80	50	400	449	225	1713	90	319	338	535	1228	480	1300	150	1000	-	380	340	170	4×19
	7,5	199	57	363	80	50	400	449	225	1749	90	319	338	535	1228	516	1300	150	1000	-	380	340	170	4×19
	11	199	125	431	80	50	400	449	225	1848	90	319	338	593	1228	615	1440	150	1140	-	380	340	170	4×19
50/7	7,5	218	57	373	80	50	462	449	225	1811	90	319	338	535	1290	516	1500	150	1200	-	380	340	170	4×19
	11	218	125	441	80	50	462	449	225	1910	90	319	338	593	1290	615	1500	150	1200	-	380	340	170	4×19
	15	218	150	466	80	50	462	449	225	2005	90	319	338	590	1290	710	1500	150	1200	-	380	340	170	4×19
50/8	7,5	237	57	407	80	50	524	449	225	1873	90	319	358	535	1352	516	1560	150	1260	630	380	340	170	6×21
	11	237	125	475	80	50	524	449	225	1972	90	319	358	593	1352	615	1560	150	1260	630	380	340	170	6×21
	15	237	150	500	80	50	524	449	225	2067	90	319	358	590	1352	710	1560	150	1260	630	380	340	170	6×21
50/9	11	256	125	524	80	50	586	449	225	2034	90	319	358	593	1414	615	1620	150	1320	660	380	340	170	6×21
	15	256	150	549	80	50	586	449	225	2129	90	319	358	590	1414	710	1620	150	1320	660	380	340	170	6×21
	18,5	256	171	570	80	50	586	449	225	2149	90	319	358	628	1414	730	1700	150	1400	700	440	400	200	6×21
50/10	11	275	125	544	80	50	648	449	225	2096	90	319	358	613	1476	615	1680	150	1380	690	380	340	170	6×21
	15	275	150	569	80	50	648	449	225	2191	90	319	358	610	1476	710	1680	150	1380	690	380	340	170	6×21
	18,5	275	171	590	80	50	648	449	225	2211	90	319	358	628	1476	730	1760	150	1460	730	440	400	200	6×21
	22	275	190	609	80	50	648	449	225	2261	90	319	358	628	1476	780	1760	150	1460	730	440	400	200	6×21
50/11	11	294	125	565	80	50	710	449	225	2158	90	319	358	613	1538	615	1740	150	1440	720	380	340	170	6×21
	15	294	150	590	80	50	710	449	225	2253	90	319	358	610	1538	710	1740	150	1440	720	380	340	170	6×21
	18,5	294	171	611	80	50	710	449	225	2273	90	319	358	628	1538	730	1820	150	1520	760	440	400	200	6×21
	22	294	190	630	80	50	710	449	225	2323	90	319	358	628	1538	780	1820	150	1520	760	440	400	200	6×21
50/12	11	313	125	587	80	50	772	449	225	2220	90	319	358	613	1600	615	1800	150	1500	750	380	340	170	6×21
	15	313	150	612	80	50	772	449	225	2315	90	319	358	610	1600	710	1800	150	1500	750	380	340	170	6×21
	18,5	313	171	633	80	50	772	449	225	2335	90	319	358	628	1600	730	1880	150	1580	790	440	400	200	6×21
	22	313	190	652	80	50	772	449	225	2385	90	319	358	628	1600	780	1880	150	1580	790	440	400	200	6×21
50/13	15	332	150	629	80	50	834	449	225	2377	90	319	358	610	1662	710	1940	150	1640	820	440	400	200	6×21
	18,5	332	171	650	80	50	834	449	225	2397	90	319	358	628	1662	730	1940	150	1640	820	440	400	200	6×21
	22	332	190	669	80	50	834	449	225	2447	90	319	358	628	1662	780	1940	150	1640	820	440	400	200	6×21
	30	332	255	734	80	50	834	449	225	2438	90	319	358	661	1662	771	1980	150	1680	840	480	440	220	6×21
50/14	15	351	150	668	80	50	896	449	225	2439	90	319	358	610	1724	710	2000	150	1700	850	440	400	200	6×21
	18,5	351	171	689	80	50	896	449	225	2459	90	319	358	628	1724	730	2000	150	1700	850	440	400	200	6×21
	22	351	190	708	80	50	896	449	225	2509	90	319	358	628	1724	780	2000	150	1700	850	440	400	200	6×21
	30	351	255	773	80	50	896	449	225	2500	90	319	378	661	1724	771	2040	150	1740	870	500	460	230	6×21
50/15	15	370	150	691	80	50	958	449	225	2501	90	319	378	610	1786	710	2080	150	1780	890	440	400	200	6×21
	18,5	370	171	712	80	50	958	449	225	2521	90	319	378	628	1786	730	2080	150	1780	890	440	400	200	6×21
	22	370	190	731	80	50	958	449	225	2571	90	319	378	628	1786	780	2080	150	1780	890	440	400	200	6×21
	30	370	255	796	80	50	958	449	225	2562	90	319	378	661	1786	771	2120	150	1820	910	500	460	260	6×21
50/16	18,5	389	171	734	80	50	1020	449	225	2583	90	319	378	648	1848	730	2140	150	1840	920	460	420	210	6×21
	22	389	190	753	80	50	1020	449	225	2633	90	319	378	648	1848	780	2140	150	1840	920	460	420	210	6×21
	30	389	255	818	80	50	1020	449	225	2624	90	319	378	681	1848	771	2180	150	1880	940	500	460	230	6×21
50/17	18,5	408	171	773	80	50	1082	449	225	2645	90	319	378	648	1910	730	2200	150	1900	950	460	420	210	6×21
	22	408	190	792	80	50	1082	449	225	2695	90	319	378	648	1910	780	2200	150	1900	950	460	420	210	6×21
	30	408	255	857	80	50	1082	449	225	2686	90	319	378	681	1910	771	2240	150	1940	970	500	460	230	6×21
	37	408	269	871	80	50	1082	449	225	2730	90	319	408	720	1910	815	2280	150	1980	990	540	500	250	6×21
50/18	18,5	427	171	795	80	50	1144	449	225	2707	90	319	378	648	1972	730	2260	150	1960	980	460	420	210	6×21
	22	427	190	814	80	50	1144	449	225	2757	90	319	378	648	1972	780	2260	150	1960	980	460	420	210	6×21
	30	427	255	879	80	50	1144	449	225	2748	90	319	378	681	1972	771	2300	150	2000	1000	500	460	230	6×21
	37	427	269	893	80	50	1144	449	225	2792	90	319	408	720	1972	815	2340	150	2040	1020	540	500	250	6×21
50/19	22	446	190	837	80	50	1206	449	225	2819	90	319	378	648	2034	780	2360	150	2060	1030	500	460	230	6×21
	30	446	255	902	80	50	1206	449	225	2810	90	319	378	681	2034	771	2360	150	2060	1030	500	460	230	6×21
	37	446	269	916	80	50	1206	449	225	2854	90	319	408	720	2034	815	2420	150	2120	1060	540	500	250	6×21
50/20	22	465	190	859	80	50	1268	449	225	2881	90	319	378	648	2096	780	2420	150	2120	1060	500	460	230	6×21
	30	465	255	924	80	50	1268	449	225	2872	90	319	378	681	2096	771	2420	150	2120	1060	500	460	230	6×21
	37	465	269	938	80	50	1268	449	225	2916	90	319	408	720	2096	815	2480	150	2180	1090	540	500	250	6×21

HPM/ HPR model	DIMENSIONS (mm)																							
	kW	kg P.	kg M.	kg Tot.	Dn_1	Dn_2	a	f	h_2	L	g_1	g_2	h_1	h_3	l_1	l_2	m	m_1	m_2	m_3	n	n_1	n_2	s
80/1	1,5	142	30	279	125	80	120	473	250	1355	80	329	358	503	992	358	980	150	680	-	420	380	190	4×19
	2,2	142	36	285	125	80	120	473	250	1390	80	329	358	515	992	393	980	150	680	-	420	380	190	4×19
	3	142	40	289	125	80	120	473	250	1390	80	329	358	515	992	393	980	150	680	-	420	380	190	4×19
	4	142	46	295	125	80	120	473	250	1407	80	329	358	535	992	410	980	150	680	-	420	380	190	4×19
80/2	3	201	40	329	125	80	195	473	250	1465	80	329	358	515	1067	393	1140	150	840	-	420	380	190	4×19
	4	201	46	335	125	80	195	473	250	1482	80	329	358	535	1067	410	1140	150	840	-	420	380	190	4×19
	5,5	201	70	359	125	80	195	473	250	1552	80	329	358	555	1067	480	1140	150	840	-	420	380	190	4×19
	7,5	201	57	346	125	80	195	473	250	1588	80	329	358	555	1067	516	1140	150	840	-	420	380	190	4×19
80/3	5,5	230	70	390	125	80	270	473	250	1627	80	329	358	555	1142	480	1320	150	1020	-	420	380	190	4×19
	7,5	230	57	377	125	80	270	473	250	1663	80	329	358	555	1142	516	1320	150	1020	-	420	380	190	4×19
	11	230	125	445	125	80	270	473	250	1762	80	329	358	613	1142	615	1320	150	1020	-	420	380	190	4×19
	15	230	150	470	125	80	270	473	250	1857	80	329	358	610	1142	710	1320	150	1020	-	420	380	190	4×19
80/4	7,5	257	57	410	125	80	345	473	250	1738	80	329	358	555	1217	516	1400	150	1100	-	420	380	190	4×19
	11	257	125	478	125	80	345	473	250	1837	80	329	358	613	1217	615	1400	150	1100	-	420	380	190	4×19
	15	257	150	503	125	80	345	473	250	1932	80	329	358	610	1217	710	1400	150	1100	-	420	380	190	4×19
80/5	11	286	125	557	125	80	420	413	250	1912	80	329	358	613	1292	615	1480	150	1180	-	420	380	190	4×19
	15	286	150	582	125	80	420	413	250	2007	80	329	358	610	1292	710	1480	150	1180	-	420	380	190	4×19
	18,5	286	171	603	125	80	420	413	250	2027	80	329	378	648	1292	730	1560	150	1260	630	460	420	210	6×21
80/6	15	315	150	620	125	80	495	473	250	2082	80	329	378	610	1367	710	1640	150	1340	610	460	420	210	6×21
	18,5	315	171	641	125	80	495	473	250	2102	80	329	378	648	1367	730	1640	150	1340	610	460	420	210	6×21
	22	315	190	660	125	80	495	473	250	2152	80	329	318	648	1367	780	1640	150	1340	670	460	420	210	6×21
	30	315	255	715	125	80	495	473	250	2143	80	329	378	681	1367	771	1680	150	1380	690	500	460	230	6×21
80/7	15	344	150	653	125	80	510	413	250	2157	80	329	378	610	1442	710	1720	150	1420	710	460	420	210	6×21
	18,5	344	171	674	125	80	510	413	250	2177	80	329	378	648	1442	730	1720	150	1420	710	460	420	210	6×21
	22	344	190	693	125	80	510	413	250	2227	80	329	378	648	1442	780	1720	150	1420	710	460	420	210	6×21
	30	344	255	748	125	80	510	413	250	2218	80	329	378	681	1442	771	1760	150	1460	730	500	460	230	6×21
80/8	18,5	374	171	707	125	80	645	473	250	2252	80	329	378	648	1517	730	1820	150	1520	760	500	460	230	6×21
	22	374	190	726	125	80	645	473	250	2302	80	329	378	648	1517	780	1820	150	1520	760	500	460	230	6×21
	30	374	255	781	125	80	645	473	250	2293	80	329	378	681	1517	771	1820	150	1520	760	500	460	230	6×21
80/9	22	403	190	755	125	80	720	413	250	2377	80	329	318	648	1592	780	1900	150	1600	800	500	460	230	6×21
	30	403	255	810	125	80	720	413	250	2368	80	329	318	681	1592	771	1900	150	1600	800	500	460	230	6×21
	37	403	269	834	125	80	720	413	250	2412	80	329	383	695	1592	815	1960	150	1660	830	540	500	250	6×21
80/10	22	432	190	804	125	80	795	473	250	2452	80	329	378	648	1667	780	1980	150	1680	840	500	460	230	6×21
	30	432	255	859	125	80	795	473	250	2443	80	329	378	681	1667	771	1980	150	1680	840	500	460	230	6×21
	37	432	269	883	125	80	795	473	250	2487	80	329	403	695	1667	815	2040	150	1740	870	540	500	250	6×21
80/11	30	461	255	840	125	80	870	473	250	2518	80	329	403	681	1742	771	2120	150	1820	910	540	500	250	6×21
	37	461	269	864	125	80	870	473	250	2562	80	329	403	695	1742	815	2120	150	1820	910	540	500	250	6×21
	45	461	353	948	125	80	870	473	250	2567	80	329	403	715	1742	820	2120	150	1820	910	540	500	250	6×21
80/12	30	490	255	873	125	80	945	473	250	2593	80	329	403	681	1817	771	2180	150	1880	940	540	500	250	6×21
	37	490	269	897	125	80	945	473	250	2637	80	329	403	695	1817	815	2180	150	1880	940	540	500	250	6×21
	45	490	353	981	125	80	945	473	250	2642	80	329	403	715	1817	820	2180	150	1880	940	540	500	250	6×21
80/13	30	520	255	914	125	80	1020	473	250	2668	80	329	403	681	1892	771	2260	150	1960	980	540	500	250	6×21
	37	520	269	938	125	80	1020	473	250	2712	80	329	403	695	1892	815	2260	150	1960	980	540	500	250	6×21
	45	520	353	1022	125	80	1020	473	250	2717	80	329	403	715	1892	820	2260	150	1960	980	540	500	250	6×21
	55	520	450	1119	125	80	1020	473	250	2807	80	329	433	788	1892	910	2340	150	2040	1020	600	560	280	6×21
80/14	37	549	269	971	125	80	1095	473	250	2787	80	329	403	695	1967	815	2340	150	2040	1020	540	500	250	6×21
	45	549	353	1055	125	80	1095	473	250	2792	80	329	403	715	1967	820	2340	150	2040	1020	540	500	250	6×21
	55	549	450	1152	125	80	1095	473	250	2882	80	329	433	788	1967	910	2420	150	2120	1060	600	560	280	6×21
80/15	37	578	269	1034	125	80	1170	473	250	2862	80	329	403	695	2042	815	2420	150	2120	1060	540	500	250	6×21
	45	578	353	1118	125	80	1170	473	250	2867	80	329	403	715	2042	820	2420	150	2120	1060	540	500	250	6×21
	55	578	450	1215	125	80	1170	473	250	2957	80	329	433	788	2042	910	2480	150	2180	1090	600	560	280	6×21
	75	578	605	1370	125	80	1170	473	250	3032	80	329	493	891	2042	985	2580	150	2280	1140	660	620	310	8×21
80/16	37	607	269	1068	125	80	1245	473	250	2937	80	329	403	695	2117	815	2480	150	2180	1090	540	500	250	6×21
	45	607	353	1152	125	80	1245	473	250	2942	80	329	403	715	2117	820	2480	150	2180	1090	540	500	250	6×21
	55	607	450	1249	125	80	1245	473	250	3032	80	329	453	788	2117	910	2550	150	2250	1125	620	580	290	8×21
	75	607	605	1404	125	80	1245	473	250	3107	80	329	493	891	2117	985	2640	150	2340	1170	660	620	310	8×21
80/17	45	636	353	1186	125	80	1320	473	250	3047	80	329	453	715	2192	850	2640	150	2340	1170	620	580	290	8×21
	55	636	450	1283	125	80	1320	473	250	3107	80	329	453	788	2192	910	2640	150	2340	1170	620	580	290	8×21
	75	636	605	1438	125	80	1320	473	250	3182	80	329	493	891	2192	985	2730	150	2430	1215	660	620	310	8×21
80/18	45	665	353	1220	125	80	1395	473	250	3122	80	329	453	715	2267	850	2700	150	2400	1200	620	580	290	8×21
	55	665	450	1317	125	80	1395	473	250	3182	80	329	453	788	2267	910	2700	150	2400	1200	620	580	290	8×21
	75	665	605	1472	125	80	1395	473	250	3257	80	329	493	891	2267	985	2820	150	2520	1260	660	620	310	8×21

HPM/HPR 100

1.450 rpm - Oil lubrication

HPM/ HPR model	DIMENSIONS (mm)																							
	kW	kg P.	kg M.	kg Tot.	Dn_1	Dn_2	a	f	h_2	L	g_1	g_2	h_1	h_3	l_1	l_2	m	m_1	m_2	m_3	n	n_1	n_2	s
100/1	5,5	246	70	427	150	100	145	528	315	1676	70	348	408	605	1191	480	1140	150	840	-	480	440	220	4×19
	7,5	246	57	451	150	100	145	528	315	1712	70	348	408	605	1191	516	1140	150	840	-	480	440	220	4×19
	11	246	125	506	150	100	145	528	315	1811	70	348	408	663	1191	615	1260	150	960	-	480	440	220	4×19
100/2	11	291	125	555	150	100	235	528	315	1811	70	348	408	663	1191	615	1360	150	1060	-	480	440	220	4×19
	15	291	150	580	150	100	235	528	315	1906	70	348	408	660	1191	710	1360	150	1060	-	480	440	220	4×19
	18,5	291	171	600	150	100	235	528	315	1926	70	348	408	678	1191	730	1420	150	1120	-	500	460	230	4×19
100/3	15	336	150	649	150	100	325	528	315	1996	70	348	408	663	1281	710	1500	150	1200	-	500	460	230	4×19
	18,5	336	171	663	150	100	325	528	315	2016	70	348	408	660	1281	730	1500	150	1200	-	500	460	230	4×19
	22	336	190	681	150	100	325	528	315	2066	70	348	408	678	1281	780	1500	150	1200	-	500	460	230	4×19
	30	336	255	744	150	100	325	528	315	2057	70	348	428	731	1281	771	1540	150	1240	620	500	460	230	6×21
100/4	18,5	381	171	723	150	100	415	528	315	2106	70	348	428	660	1371	730	1640	150	1340	670	500	460	230	6×21
	22	381	190	741	150	100	415	528	315	2156	70	348	428	678	1371	780	1640	150	1340	670	500	460	230	6×21
	30	381	255	804	150	100	415	528	315	2147	70	348	428	731	1371	771	1640	150	1340	670	500	460	230	6×21
	37	381	269	828	150	100	415	528	315	2191	70	348	413	725	1371	815	1700	150	1400	700	520	480	240	6×21
100/5	22	426	190	738	150	100	505	528	315	2246	70	348	413	678	1461	780	1800	150	1500	750	520	480	240	6×21
	30	426	255	801	150	100	505	528	315	2237	70	348	413	731	1461	771	1800	150	1500	750	520	480	240	6×21
	37	426	269	825	150	100	505	528	315	2281	70	348	413	725	1461	815	1800	150	1500	750	520	480	240	6×21
	45	426	353	909	150	100	505	528	315	2286	70	348	413	725	1461	820	1800	150	1500	750	520	480	240	6×21
100/6	30	471	255	841	150	100	595	528	315	2327	70	348	413	731	1551	771	1880	150	1580	790	520	480	240	6×21
	37	471	269	854	150	100	595	528	315	2371	70	348	413	725	1551	815	1880	150	1580	790	520	480	240	6×21
	45	471	353	949	150	100	595	528	315	2376	70	348	413	725	1551	820	1880	150	1580	790	520	480	240	6×21
	55	471	450	1046	150	100	595	528	315	2466	70	348	413	768	1551	910	1960	150	1660	830	560	520	260	6×21
100/7	37	516	269	920	150	100	685	528	315	2461	70	348	413	725	1641	815	1980	150	1680	840	520	480	240	6×21
	45	516	353	1015	150	100	685	528	315	2466	70	348	413	725	1641	820	1980	150	1680	840	520	480	240	6×21
	55	516	450	1112	150	100	685	528	315	2556	70	348	433	725	1641	910	2040	150	1740	870	580	540	270	6×21
100/8	45	561	353	1048	150	100	775	528	315	2556	70	348	433	725	1731	820	2140	150	1840	920	580	540	270	6×21
	55	561	450	1145	150	100	775	528	315	2646	70	348	433	725	1731	910	2140	150	1840	920	580	540	270	6×21
	75	561	605	1300	150	100	775	528	315	2721	70	348	463	861	1731	985	2220	150	1920	960	640	600	300	6×21
100/9	45	606	353	1098	150	100	865	528	315	2646	70	348	433	725	1821	820	2220	150	1920	960	580	540	270	6×21
	55	606	450	1195	150	100	865	528	315	2736	70	348	433	725	1821	910	2220	150	1920	960	580	540	270	6×21
	75	606	605	1350	150	100	865	528	315	2811	70	348	463	861	1821	985	2320	150	2020	1010	640	600	300	6×21
100/10	45	651	353	1150	150	100	955	528	315	2736	70	348	463	775	1911	820	2400	150	2100	1050	640	600	300	6×21
	55	651	450	1247	150	100	955	528	315	2826	70	348	463	818	1911	910	2400	150	2100	1050	640	600	300	6×21
	75	651	605	1402	150	100	955	528	315	2901	70	348	463	861	1911	985	2400	150	2100	1050	640	600	300	6×21
	90	651	700	1497	150	100	955	528	315	2951	70	348	463	861	1911	1035	2400	150	2100	1050	640	600	300	6×21
100/11	55	696	450	1297	150	100	1045	528	315	2916	70	348	463	818	2001	910	2500	150	2200	1100	640	600	300	6×21
	75	696	605	1452	150	100	1045	528	315	2991	70	348	463	861	2001	985	2500	150	2200	1100	640	600	300	6×21
	90	696	700	1547	150	100	1045	528	315	3041	70	348	463	861	2001	1035	2500	150	2200	1100	640	600	300	6×21
100/12	55	741	450	1567	150	100	1135	528	315	3006	70	348	483	818	2091	910	2610	150	2310	770	640	600	300	8×21
	75	741	605	1722	150	100	1135	528	315	3081	70	348	483	861	2091	985	2610	150	2310	770	640	600	300	8×21
	90	741	700	1817	150	100	1135	528	315	3131	70	348	483	861	2091	1035	2610	150	2310	770	640	600	300	8×21
	110	741	925	2042	150	100	1135	528	315	3256	70	348	543	1073	2091	1160	2760	150	2460	820	740	700	350	8×21
100/13	75	786	605	1754	150	100	1225	528	315	3171	70	348	483	881	2181	985	2700	150	2400	800	640	600	300	8×21
	90	786	700	1849	150	100	1225	528	315	3221	70	348	483	881	2181	1035	2700	150	2400	800	640	600	300	8×21
	110	786	925	2074	150	100	1225	528	315	3346	70	348	543	1073	2181	1160	2850	150	2550	850	740	700	350	8×21
100/14	75	831	605	1806	150	100	1315	528	315	3261	70	348	483	881	2271	985	2790	150	2490	830	640	600	300	8×21
	90	831	700	1901	150	100	1315	528	315	3311	70	348	483	881	2271	1035	2790	150	2490	830	640	600	300	8×21
	110	831	925	2126	150	100	1315	528	315	3436	70	348	543	1073	2271	1160	2940	150	2640	880	740	700	350	8×21
100/15	90	876	700	1816	150	100	1405	528	315	3401	70	348	563	961	2361	1035	3030	150	2730	910	740	700	350	8×21
	110	876	925	2041	150	100	1405	528	315	3526	70	348	563	1093	2361	1160	3030	150	2730	910	740	700	350	8×21
	132	876	1180	2296	150	100	1405	528	315	3556	70	348	563	1093	2361	1190	3030	150	2730	910	740	700	350	8×21
100/16	90	966	700	1862	150	100	1495	528	315	3491	70	348	563	961	2451	1035	3000	150	2820	940	740	700	350	8×21
	110	966	925	2087	150	100	1495	528	315	3616	70	348	563	1093	2451	1160	3000	150	2820	940	740	700	350	8×21
	132	966	1180	2342	150	100	1495	528	315	3646	70	348	563	1093	2451	1190	3120	150	2820	940	740	700	350	8×21

HPM/ HPR model	DIMENSIONS (mm)																							
	kW	kg P.	kg M.	kg Tot.	Dn_1	Dn_2	a	f	h_2	L	g_1	g_2	h_1	h_3	l_1	l_2	m	m_1	m_2	m_3	n	n_1	n_2	s
	18,5	406	171	809	200	125	185	644	350	2077	50	463	518	788	1342	730	1540	150	1240	620	600	560	280	6×21
125/1	22	406	190	747	200	125	185	644	350	2127	50	463	518	788	1342	780	1540	150	1240	620	600	560	280	6×21
	30	406	255	893	200	125	185	644	350	2118	50	463	518	821	1342	771	1540	150	1240	620	600	560	280	6×21
	37	487	269	1077	200	125	295	644	350	2272	50	463	518	830	1452	815	1780	150	1480	740	600	560	280	6×21
125/2	45	487	353	1161	200	125	295	644	350	2277	50	463	518	830	1452	820	1780	150	1480	740	600	560	280	6×21
	55	487	450	1258	200	125	295	644	350	2367	50	463	518	873	1452	910	1780	150	1480	740	600	560	280	6×21
	45	568	353	1198	200	125	405	644	350	2387	50	463	518	830	1562	820	1980	150	1680	840	640	600	300	6×21
125/3	55	568	450	1295	200	125	405	644	350	2477	50	463	518	873	1562	910	1980	150	1680	840	640	600	300	6×21
	75	568	605	1450	200	125	405	644	350	2552	50	463	518	916	1562	985	1980	150	1680	840	640	600	300	6×21
	75	649	605	1582	200	125	515	644	350	2662	50	463	518	916	1672	985	2280	150	1980	980	720	680	340	6×21
125/4	90	649	700	1677	200	125	515	644	350	2712	50	463	518	916	1672	1035	2280	150	1980	980	720	680	340	6×21
	110	649	925	1902	200	125	515	644	350	2837	50	463	518	1048	1672	1160	2280	150	1980	980	720	680	340	6×21
	90	730	700	1596	200	125	625	644	350	2822	50	463	518	916	1782	1035	2400	150	2100	1050	720	680	340	6×21
125/5	110	730	925	1821	200	125	625	644	350	2947	50	463	518	1048	1782	1160	2400	150	2100	1050	720	680	340	6×21
	132	730	1180	2076	200	125	625	644	350	2977	50	463	518	1048	1782	1190	2400	150	2100	1050	720	680	340	6×21
	110	811	925	1981	200	125	735	644	350	3057	50	463	518	1048	1892	1160	2500	150	2200	1100	720	680	340	6×21
125/6	132	811	1180	2236	200	125	735	644	350	3087	50	463	518	1048	1892	1190	2500	150	2200	1100	720	680	340	6×21
	160	811	1161	2217	200	125	735	644	350	3217	50	463	518	1048	1892	1320	2500	150	2200	1100	720	680	340	6×21
	132	892	1180	2237	200	125	845	644	350	3197	50	463	538	1048	2002	1190	2610	150	2310	770	720	680	340	8×21
125/7	160	892	1161	2218	200	125	845	644	350	3327	50	463	538	1048	2002	1320	2610	150	2310	770	720	680	340	8×21
	200	892	1241	2298	200	125	845	644	350	3327	50	463	538	1048	2002	1320	2610	150	2310	770	720	680	340	8×21
	132	973	1180	2534	200	125	955	644	350	3307	50	463	538	1048	2112	1190	2730	150	2430	810	720	680	340	8×21
125/8	160	973	1161	2515	200	125	955	644	350	3437	50	463	538	1048	2112	1320	2730	150	2430	810	720	680	340	8×21
	200	973	1241	2595	200	125	955	644	350	3437	50	463	538	1048	2112	1320	2730	150	2430	810	720	680	340	8×21
	160	1054	1161	2508	200	125	1065	644	350	3547	50	463	538	1048	2222	1320	2820	150	2520	840	720	680	340	8×21
125/9	200	1054	1241	2581	200	125	1065	644	350	3547	50	463	538	1048	2222	1320	2820	150	2520	840	720	680	340	8×21
	250	1054	1870	3171	200	125	1065	644	350	3727	50	463	562	1217	2222	1500	3000	150	2700	900	840	800	400	8×21
125/10	200	1135	1241	2671	200	125	1175	644	350	3657	50	463	538	1048	2332	1320	2940	150	2640	880	720	680	340	8×21
	250	1135	1870	3285	200	125	1175	644	350	3837	50	463	582	1217	2332	1500	3120	150	2820	940	840	800	400	8×21
	200	1216	1241	2856	200	125	1285	644	350	3767	50	463	582	1048	2442	1320	3240	150	2940	980	840	800	400	8×21
125/11	250	1216	1870	3485	200	125	1285	644	350	3947	50	463	582	1217	2442	1500	3240	150	2940	980	840	800	400	8×21
	315	1216	2090	3705	200	125	1285	644	350	3947	50	463	582	1217	2442	1500	3240	150	2940	980	840	800	400	8×21
125/12	250	1297	1870	3566	200	125	1395	644	350	4057	50	463	582	1217	2552	1500	3330	150	3030	1010	840	800	400	8×21
	315	1297	2090	3786	200	125	1395	644	350	4057	50	463	582	1217	2552	1500	3330	150	3030	1010	840	800	400	8×21

HPM/HPR 150

1.450 rpm - Oil lubrication

HPM/ HPR model	DIMENSIONS (mm)																							
	kW	kg P.	kg M.	kg Tot.	Dn_1	Dn_2	a	f	h_2	L	g_1	g_2	h_1	h_3	l_1	l_2	m	m_1	m_2	m_3	n	n_1	n_2	s
150/1	30	725	255	3798	250	150	235	629,5	420	2148,5	40	398	533	836	1372,5	771	1820	150	1520	760	720	680	340	6×21
	37	725	269	3798	250	150	235	629,5	420	2192,5	40	398	533	845	1372,5	815	1820	150	1520	760	720	680	340	6×21
	45	725	353	3798	250	150	235	629,5	420	2197,5	40	398	533	845	1372,5	820	1820	150	1520	760	720	680	340	6×21
	55	725	450	3798	250	150	235	629,5	420	2287,5	40	398	533	888	1372,5	910	1820	150	1520	760	720	680	340	6×21
	75	725	605	1669	250	150	235	629,5	420	2362,5	40	398	533	931	1372,5	985	1820	150	1520	760	720	680	340	6×21
150/2	75	861	605	3798	250	150	370	629,5	420	2497,5	40	398	553	951	1507,5	985	2120	150	1820	910	720	680	340	6×21
	90	861	700	3798	250	150	370	629,5	420	2547,5	40	398	553	951	1507,5	1035	2120	150	1820	910	720	680	340	6×21
	110	861	925	3798	250	150	370	629,5	420	2672,5	40	398	553	1083	1507,5	1160	2120	150	1820	910	720	680	340	6×21
	132	861	1180	2421	250	150	370	629,5	420	2702,5	40	398	553	1083	1507,5	1190	2120	150	1820	910	720	680	340	6×21
150/3	90	997	700	3798	250	150	505	629,5	420	2682,5	40	398	553	951	1642,5	1035	2260	150	1960	980	720	680	340	6×21
	110	997	925	3798	250	150	505	629,5	420	2807,5	40	398	553	1083	1642,5	1160	2260	150	1960	980	720	680	340	6×21
	132	997	1180	3798	250	150	505	629,5	420	2837,5	40	398	553	1083	1642,5	1190	2260	150	1960	980	720	680	340	6×21
	160	997	1161	3798	250	150	505	629,5	420	2967,5	40	398	553	1083	1642,5	1320	2260	150	1960	980	720	680	340	6×21
	200	997	1241	2674	250	150	505	629,5	420	2967,5	40	398	553	1083	1642,5	1320	2260	150	1960	980	720	680	340	6×21
150/4	160	1133	1161	3798	250	150	640	629,5	420	3102,5	40	398	573	1103	1777,5	1320	2580	150	2280	760	840	800	400	8×21
	200	1133	1241	3798	250	150	640	629,5	420	3102,5	40	398	573	1103	1777,5	1320	2580	150	2280	760	840	800	400	8×21
	250	1133	1870	3798	250	150	640	629,5	420	3282,5	40	398	573	1228	1777,5	1500	2580	150	2280	760	840	800	400	8×21
	315	1133	2090	3999	250	150	640	629,5	420	3282,5	40	398	573	1228	1777,5	1500	2580	150	2280	760	840	800	400	8×21
150/5	200	1269	1241	3286	250	150	775	629,5	420	3237,5	40	398	573	1103	1912,5	1320	2700	150	2400	800	840	800	400	8×21
	250	1269	1870	3915	250	150	775	629,5	420	3417,5	40	398	573	1228	1912,5	1500	2700	150	2400	800	840	800	400	8×21
	315	1269	2090	4135	250	150	775	629,5	420	3417,5	40	398	573	1228	1912,5	1500	2700	150	2400	800	840	800	400	8×21
	365	1269	2050	4095	250	150	775	629,5	420	3727,5	40	398	573	1118	1912,5	1810	2700	150	2400	800	840	800	400	8×21
150/6	250	1405	1870	4066	250	150	910	629,5	420	3552,5	40	398	573	1228	2047,5	1500	2850	150	2550	850	840	800	400	8×21
	315	1405	2090	4286	250	150	910	629,5	420	3552,5	40	398	573	1228	2047,5	1500	2850	150	2550	850	840	800	400	8×21
	365	1405	2050	4246	250	150	910	629,5	420	3862,5	40	398	573	1118	2047,5	1810	2850	150	2550	850	840	800	400	8×21
	400	1405	2350	4546	250	150	910	629,5	420	4037,5	40	398	573	1148	2047,5	1985	2850	150	2550	850	840	800	400	8×21
150/7	315	1541	2090	4432	250	150	1045	629,5	420	3687,5	40	398	573	1228	2182,5	1500	2970	150	2670	890	840	800	400	8×21
	365	1541	2050	4392	250	150	1045	629,5	420	3997,5	40	398	573	1118	2182,5	1810	2970	150	2670	890	840	800	400	8×21
	400	1541	2350	4692	250	150	1045	629,5	420	4172,5	40	398	573	1148	2182,5	1985	2970	150	2670	890	840	800	400	8×21
	470	1541	2550	4892	250	150	1045	629,5	420	4172,5	40	398	573	1148	2182,5	1985	2970	150	2670	890	840	800	400	8×21
	560	1541	2750	5092	250	150	1045	629,5	420	4172,5	40	398	573	1148	2182,5	1985	2970	150	2670	890	840	800	400	8×21
150/8	365	1677	2050	4538	250	150	1180	629,5	420	4132,5	40	398	593	1138	2317,5	1810	3120	150	2820	940	840	800	400	8×21
	400	1677	2350	4838	250	150	1180	629,5	420	4307,5	40	398	593	1168	2317,5	1985	3120	150	2820	940	840	800	400	8×21
	470	1677	2550	5038	250	150	1180	629,5	420	4307,5	40	398	593	1168	2317,5	1985	3120	150	2820	940	840	800	400	8×21
	560	1677	2750	5238	250	150	1180	629,5	420	4307,5	40	398	593	1168	2317,5	1985	3120	150	2820	940	840	800	400	8×21
	600	1677	3400	5888	250	150	1180	629,5	420	4447,5	40	398	632	1242	2317,5	2125	3570	150	3270	1090	980	940	470	8×21
150/9	400	1813	2350	4984	250	150	1315	629,5	420	4442,5	40	398	593	1168	2452,5	1985	3240	150	2940	980	840	800	400	8×21
	470	1813	2550	5184	250	150	1315	629,5	420	4442,5	40	398	593	1168	2452,5	1985	3240	150	2940	980	840	800	400	8×21
	560	1813	2750	5384	250	150	1315	629,5	420	4442,5	40	398	652	1227	2452,5	1985	3690	150	3390	1130	980	940	470	8×21
	600	1813	3400	6034	250	150	1315	629,5	420	4582,5	40	398	652	1262	2452,5	2125	3690	150	3390	1130	980	940	470	8×21
150/10	470	1949	2550	5330	250	150	1450	629,5	420	4577,5	40	398	593	1168	2587,5	1985	3390	150	3090	1030	840	800	400	8×21
	560	1949	2750	5530	250	150	1450	629,5	420	4577,5	40	398	593	1168	2587,5	1985	3390	150	3090	1030	840	800	400	8×21
	600	1949	3400	6180	250	150	1450	629,5	420	4717,5	40	398	652	1262	2587,5	2125	3840	150	3540	1180	980	940	470	8×21
	680	1949	3600	6380	250	150	1450	629,5	420	4717,5	40	398	652	1262	2587,5	2125	3840	150	3540	1180	980	940	470	8×21
150/11	470	2085	2550	5466	250	150	1585	629,5	420	4712,5	40	405	593	1168	2722,5	1985	3450	150	3150	1050	840	800	400	8×21
	560	2085	2750	5666	250	150	1585	629,5	420	4712,5	40	405	593	1168	2722,5	1985	3450	150	3150	1050	840	800	400	8×21
	600	2085	3400	6316	250	150	1585	629,5	420	4852,5	40	405	593	1203	2722,5	2125	3450	150	3150	1050	840	800	400	8×21
	680	2085	3600	6516	250	150	1585	629,5	420	4852,5	40	405	593	1203	2722,5	2125	3450	150	3150	1050	840	800	400	8×21
	750	2085	3800	6716	250	150	1585	629,5	420	4852,5	40	405	593	1203	2722,5	2125	3450	150	3150	1050	840	800	400	8×21
	900	2085	4700	7616	250	150	1585	629,5	420	5117,5	40	405	593	1243	2722,5	2390	3450	150	3150	1050	840	800	400	8×21

HPM/ HPR model	DIMENSIONS (mm)																							
	kW	kg P.	kg M.	kg Tot.	Dn_1	Dn_2	a	f	h_2	L	g_1	g_2	h_1	h_3	l_1	l_2	m	m_1	m_2	m_3	n	n_1	n_2	s
250/1	90	1252	700	2164	300	250	310	649,5	550	2477,5	-	378	682	1080	1487,5	985	2120	150	1820	910	920	880	440	6×21
	110	1252	925	2389	300	250	310	649,5	550	2652,5	-	378	682	1212	1487,5	1160	2120	150	1820	910	920	880	440	6×21
	132	1252	1180	2644	300	250	310	649,5	550	2792,5	-	378	682	1212	1487,5	1300	2120	150	1820	910	920	880	440	6×21
	160	1252	1161	2625	300	250	310	649,5	550	2842,5	-	378	682	1212	1487,5	1350	2120	150	1820	910	920	880	440	6×21
	200	1252	1241	2698	300	250	310	649,5	550	2842,5	-	378	682	1212	1487,5	1350	2120	150	1820	910	920	880	440	6×21
250/2	160	1568	1161	2885	300	250	505	649,5	550	3037,5	-	378	682	1212	1682,5	1350	2480	150	2180	1090	920	880	440	6×21
	200	1568	1241	2965	300	250	505	649,5	550	3037,5	-	378	682	1212	1682,5	1350	2480	150	2180	1090	920	880	440	6×21
	250	1568	1870	3594	300	250	505	649,5	550	3217,5	-	378	682	1337	1682,5	1530	2480	150	2180	1090	920	880	440	6×21
	315	1568	2090	3814	300	250	505	649,5	550	3217,5	-	378	682	1337	1682,5	1530	2480	150	2180	1090	920	880	440	6×21
	365	1568	2050	3864	300	250	505	649,5	550	3497,5	-	378	682	1247	1682,5	1810	2480	150	2180	1090	920	880	440	6×21
	400	1568	2350	4164	300	250	505	649,5	550	3672,5	-	378	682	1289	1682,5	1985	2480	150	2180	1090	920	880	440	6×21
250/3	250	1884	1870	4040	300	250	700	649,5	550	3412,5	-	378	702	1337	1877,5	1530	2700	150	2400	800	920	880	440	8×21
	315	1884	2090	4260	300	250	700	649,5	550	3412,5	-	378	702	1337	1877,5	1530	2700	150	2400	800	920	880	440	8×21
	365	1884	2050	4220	300	250	700	649,5	550	3692,5	-	378	702	1247	1877,5	1810	2700	150	2400	800	920	880	440	8×21
	400	1884	2350	4520	300	250	700	649,5	550	3867,5	-	378	702	1277	1877,5	1985	2700	150	2400	800	920	880	440	8×21
	470	1884	2550	4720	300	250	700	649,5	550	3867,5	-	378	702	1277	1877,5	1985	2700	150	2400	800	920	880	440	8×21
	560	1884	2750	4920	300	250	700	649,5	550	3867,5	-	378	722	1297	1877,5	1985	3120	150	2820	940	980	940	470	8×21
250/4	365	2200	2050	4556	300	250	895	649,5	550	3887,5	-	378	722	1267	2072,5	1810	3330	150	3030	1010	980	940	470	8×21
	400	2200	2350	4856	300	250	895	649,5	550	4062,5	-	378	722	1297	2072,5	1985	3330	150	3030	1010	980	940	470	8×21
	470	2200	2550	5056	300	250	895	649,5	550	4062,5	-	378	722	1297	2072,5	1985	3330	150	3030	1010	980	940	470	8×21
	560	2200	2750	5256	300	250	895	649,5	550	4062,5	-	378	722	1297	2072,5	1985	3330	150	3030	1010	980	940	470	8×21
	600	2200	3400	5906	300	250	895	649,5	550	4202,5	-	378	722	1332	2072,5	2125	3660	150	3360	1120	1080	1040	570	8×21
	680	2200	3600	6106	300	250	895	649,5	550	4202,5	-	378	722	1332	2072,5	2125	3660	150	3360	1120	1080	1040	570	8×21
	750	2200	3800	6306	300	250	895	649,5	550	4202,5	-	378	722	1332	2072,5	2125	3660	150	3360	1120	1080	1040	570	8×21
	900	2200	4700	7206	300	250	895	649,5	550	4467,5	-	378	742	1392	2072,5	2390	3660	150	3360	1120	1080	1040	570	8×21
250/5	470	2516	2550	5387	300	250	1090	649,5	550	4257,5	-	378	742	1317	2267,5	1985	3510	150	3210	1070	980	940	470	8×21
	560	2516	2750	5587	300	250	1090	649,5	550	4257,5	-	378	742	1317	2267,5	1985	3510	150	3210	1070	980	940	470	8×21
	600	2516	3400	6237	300	250	1090	649,5	550	4397,5	-	378	742	1352	2267,5	2125	3510	150	3210	1070	980	940	470	8×21
	680	2516	3600	6437	300	250	1090	649,5	550	4397,5	-	378	742	1352	2267,5	2125	3510	150	3210	1070	980	940	470	8×21
	750	2516	3800	6637	300	250	1090	649,5	550	4397,5	-	378	742	1352	2267,5	2125	3510	150	3210	1070	980	940	470	8×21
	900	2516	4700	7537	300	250	1090	649,5	550	4662,5	-	378	742	1392	2267,5	2390	3510	150	3210	1070	980	940	470	8×21
	950	2516	5000	7837	300	250	1090	649,5	550	4662,5	-	378	742	1392	2267,5	2390	3510	150	3210	1070	980	940	470	8×21
	1050	2516	5300	8137	300	250	1090	649,5	550	4662,5	-	378	742	1392	2267,5	2390	3840	150	3540	1180	1080	1040	570	8×21
250/6	560	2832	2750	5938	300	250	1090	649,5	550	4452,5	-	378	762	1337	2462,5	1985	4050	150	3750	1250	1080	1024	512	8×28
	600	2832	3400	6588	300	250	1090	649,5	550	4592,5	-	378	762	1372	2462,5	2125	4050	150	3750	1250	1080	1024	512	8×28
	680	2832	3600	6788	300	250	1090	649,5	550	4592,5	-	378	762	1372	2462,5	2125	4050	150	3750	1250	1080	1024	512	8×28
	750	2832	3800	6988	300	250	1090	649,5	550	4592,5	-	378	762	1372	2462,5	2125	4050	150	3750	1250	1080	1024	512	8×28
	900	2832	4700	7888	300	250	1090	649,5	550	4857,5	-	378	762	1412	2462,5	2390	4050	150	3750	1250	1080	1024	512	8×28
	950	2832	5000	8188	300	250	1090	649,5	550	4857,5	-	378	762	1412	2462,5	2390	4050	150	3750	1250	1080	1024	512	8×28
	1050	2832	5300	8488	300	250	1090	649,5	550	4857,5	-	378	762	1412	2462,5	2390	4050	150	3750	1250	1080	1024	512	8×28
250/7	750	3148	3800	7329	300	250	1480	649,5	550	4787,5	-	378	762	1372	2657,5	2125	4230	150	3930	1310	1080	1024	512	8×28
	900	3148	4700	8229	300	250	1480	649,5	550	5052,5	-	378	762	1412	2657,5	2390	4230	150	3930	1310	1080	1024	512	8×28
	950	3148	5000	8529	300	250	1480	649,5	550	5052,5	-	378	762	1412	2657,5	2390	4230	150	3930	1310	1080	1024	512	8×28
	1050	3148	5300	8829	300	250	1480	649,5	550	5052,5	-	378	762	1412	2657,5	2390	4230	150	3930	1310	1080	1024	512	8×28
	1200	3148	5900	9429	300	250	1480	649,5	550	5187,5	-	378	762	1462	2657,5	2525	4230	150	3930	1310	1080	1024	512	8×28
250/8	750	3464	3800	7680	300	250	1675	649,5	550	4982,5	-	378	762	1372	2852,5	2125	4440	150	4140	1380	1080	1024	512	8×28
	900	3464	4700	8580	300	250	1675	649,5	550	5247,5	-	378	762	1412	2852,5	2390	4440	150	4140	1380	1080	1024	512	8×28
	950	3464	5000	8880	300	250	1675	649,5	550	5247,5	-	378	762	1412	2852,5	2390	4440	150	4140	1380	1080	1024	512	8×28
	1050	3464	5300	9180	300	250	1675	649,5	550	5247,5	-	378	762	1412	2852,5	2390	4440	150	4140	1380	1080	1024	512	8×28
	1200	3464	5900	9780	300	250	1675	649,5	550	5382,5	-	378	762	1462	2852,5	2525	4440	150	4140	1380	1080	1024	512	8×28
	1300	3464	6300	10180	300	250	1675	649,5	550	5382,5	-	378	762	1462	2852,5	2525	4440	150	4140	1380	1080	1024	512	8×28

HPM/HPR 25

2.950 rpm - Oil lubrication

HPM/ HPR model	DIMENSIONS (mm)																							
	kW	kg P.	kg M.	kg Tot.	Dn_1	Dn_2	a	f	h_2	L	g_1	g_2	h_1	h_3	l_1	l_2	m	m_1	m_2	m_3	n	n_1	n_2	s
25/1	1,1	44	18	93	40	25	55	270,5	165	836,5	100	173	263	393	548,5	283	660	150	360	-	310	275	137,5	4×17
	1,5	44	23	98	40	25	55	270,5	165	883,5	100	173	263	408	548,5	330	660	150	360	-	310	275	137,5	4×17
	2,2	44	26	101	40	25	55	270,5	165	891,5	100	173	263	448	548,5	338	660	150	360	-	310	275	137,5	4×17
25/2	2,2	53	23	120	40	25	100	270,5	165	936,5	100	173	263	448	593,5	338	720	150	420	-	310	275	137,5	4×17
	3	53	26	123	40	25	100	270,5	165	991,5	100	173	263	460	593,5	393	720	150	420	-	310	275	137,5	4×17
	4	53	35	124	40	25	100	270,5	165	971,5	100	173	263	480	593,5	373	720	150	420	-	310	275	137,5	4×17
	5,5	53	43	132	40	25	100	270,5	165	988,5	100	173	263	480	593,5	390	740	150	440	-	310	275	137,5	4×17
25/3	4	62	35	147	40	25	145	270,5	165	1033,5	100	173	283	480	638,5	390	780	150	480	-	320	280	140	4×19
	5,5	62	43	147	40	25	145	270,5	165	1033,5	100	173	283	480	638,5	390	780	150	480	-	320	280	140	4×19
	7,5	62	73	160	40	25	145	270,5	165	1103,5	100	173	283	480	638,5	460	860	150	560	-	320	280	140	4×19
25/4	7,5	71	73	190	40	25	190	270,5	165	1148,5	100	173	283	480	683,5	460	920	150	620	-	320	280	140	4×19
	11	71	120	237	40	25	190	270,5	165	1184,5	100	173	283	480	683,5	496	920	150	620	-	320	280	140	4×19
25/5	11	80	120	251	40	25	235	270,5	165	1229,5	100	173	283	480	728,5	496	940	150	640	-	320	280	140	4×19
25/6	11	89	120	265	40	25	280	270,5	165	1274,5	100	173	283	480	773,5	496	1000	150	700	-	320	280	140	4×19
	15	89	132	277	40	25	280	270,5	165	1393,5	100	173	318	573	773,5	615	1120	150	820	-	400	360	180	4×19
25/7	15	98	132	308	40	25	325	270,5	165	1438,5	100	173	318	573	818,5	615	1160	150	860	-	400	360	180	4×19
	18,5	98	150	313	40	25	325	270,5	165	1533,5	100	173	318	570	818,5	710	1160	150	860	-	400	360	180	4×19
25/8	15	107	132	309	40	25	370	270,5	165	1483,5	100	173	318	573	863,5	615	1220	150	920	-	400	360	180	4×19
	18,5	107	150	324	40	25	370	270,5	165	1578,5	100	173	318	570	863,5	710	1220	150	920	-	400	360	180	4×19
25/9	18,5	116	150	334	40	25	415	270,5	165	1623,5	100	173	318	570	908,5	710	1240	150	940	-	400	360	180	4×19
	22	116	205	368	40	25	415	270,5	165	1643,5	100	173	318	588	908,5	730	1320	150	1020	-	420	380	190	4×19
25/10	18,5	125	150	345	40	25	460	270,5	165	1668,5	100	173	318	570	953,5	710	1300	150	1000	-	400	360	180	4×19
	22	125	205	379	40	25	460	270,5	165	1688,5	100	173	318	588	953,5	730	1360	150	1060	-	420	380	190	4×19
25/11	22	134	205	391	40	25	505	270,5	165	1733,5	100	173	318	588	998,5	730	1420	150	1120	-	420	380	190	4×19
	30	134	250	454	40	25	505	270,5	165	1774,5	100	173	338	641	998,5	771	1460	150	1160	-	480	440	220	4×19
25/12	22	143	205	401	40	25	550	270,5	165	1778,5	100	173	318	588	1043,5	730	1460	150	1160	-	420	380	190	4×19
	30	143	250	465	40	25	550	270,5	165	1819,5	100	173	338	641	1043,5	771	1500	150	1200	-	480	440	220	4×19
25/13	30	152	250	487	40	25	595	270,5	165	1864,5	100	173	358	661	1088,5	771	1540	150	1240	620	480	440	220	6×21
25/14	30	161	250	500	40	25	640	270,5	165	1909,5	100	173	358	661	1133,5	771	1600	150	1300	650	480	440	220	6×21
25/15	30	170	250	512	40	25	685	270,5	165	1954,5	100	173	358	661	1178,5	771	1640	150	1340	670	480	440	220	6×21
	37	170	270	538	40	25	685	270,5	165	1954,5	100	173	358	661	1178,5	771	1640	150	1340	670	480	440	220	6×21
25/16	30	179	250	523	40	25	730	270,5	165	1999,5	100	173	358	661	1223,5	771	1680	150	1380	690	480	440	220	6×21
	37	179	270	549	40	25	730	270,5	165	1999,5	100	173	358	661	1223,5	771	1680	150	1380	690	480	440	220	6×21
25/17	37	188	270	560	40	25	775	270,5	165	2044,5	100	173	358	661	1268,5	771	1720	150	1420	710	480	440	220	6×21
25/18	37	197	270	573	40	25	820	270,5	165	2089,5	100	173	358	661	1313,5	771	1780	150	1480	740	480	440	220	6×21
	45	197	315	655	40	25	820	270,5	165	2168,5	100	173	383	695	1313,5	850	1800	150	1500	750	520	480	240	6×21
25/19	37	206	270	584	40	25	865	270,5	165	2134,5	100	173	358	661	1358,5	771	1820	150	1520	760	480	440	220	6×21
	45	206	315	669	40	25	865	270,5	165	2213,5	100	173	383	695	1358,5	850	1840	150	1540	770	520	480	240	6×21
25/20	37	215	270	596	40	25	910	270,5	165	2179,5	100	173	358	661	1403,5	771	1860	150	1560	780	480	440	220	6×21
	45	215	315	682	40	25	910	270,5	165	2258,5	100	173	383	695	1403,5	850	1880	150	1580	790	520	480	240	6×21

HPM/ HPR model	DIMENSIONS (mm)																							
	kW	kg P.	kg M.	kg Tot.	Dn_1	Dn_2	a	f	h_2	L	g_1	g_2	h_1	h_3	l_1	l_2	m	m_1	m_2	m_3	n	n_1	n_2	s
32/1	2,2	93	26	149	50	32	70	404	200	1301	90	237	323	448	938	358	840	150	540	-	320	280	140	4×19
	3	93	26	158	50	32	70	404	200	1336	90	237	323	460	938	393	840	150	540	-	320	280	140	4×19
	4	93	35	166	50	32	70	404	200	1353	90	237	323	480	938	410	840	150	540	-	320	280	140	4×19
	5,5	93	43	189	50	32	70	404	200	1353	90	237	323	480	938	410	840	150	540	-	320	280	140	4×19
	7,5	93	73	198	50	32	70	404	200	1423	90	237	323	500	938	480	920	150	620	-	320	280	140	4×19
32/2	4	108	35	178	50	32	125	404	200	1298	90	237	303	480	883	410	980	150	680	-	320	280	140	4×19
	5,5	108	43	201	50	32	125	404	200	1298	90	237	303	480	883	410	980	150	680	-	320	280	140	4×19
	7,5	108	73	208	50	32	125	404	200	1368	90	237	303	500	883	480	980	150	680	-	320	280	140	4×19
	11	108	120	303	50	32	125	404	200	1503	90	237	323	558	883	615	1100	150	800	-	360	320	160	4×19
	15	108	132	303	50	32	125	404	200	1503	90	237	323	558	883	615	1100	150	800	-	360	320	160	4×19
32/3	11	123	120	301	50	32	180	404	200	1558	90	237	323	558	938	615	1160	150	860	-	360	320	160	4×19
	15	123	132	313	50	32	180	404	200	1558	90	237	323	558	938	615	1160	150	860	-	360	320	160	4×19
	18,5	123	150	331	50	32	180	404	200	1653	90	237	323	575	938	710	1160	150	860	-	360	320	160	4×19
	22	123	205	369	50	32	180	404	200	1673	90	237	323	593	938	730	1240	150	940	-	440	400	200	4×19
32/4	15	138	132	314	50	32	235	404	200	1613	90	237	338	558	993	615	1300	150	1000	-	440	400	200	4×19
	18,5	138	150	332	50	32	235	404	200	1708	90	237	338	575	993	710	1300	150	1000	-	440	400	200	4×19
	22	138	205	387	50	32	235	404	200	1728	90	237	338	593	993	730	1300	150	1000	-	440	400	200	4×19
	30	138	250	446	50	32	235	404	200	1769	90	237	338	641	993	771	1340	150	1040	-	480	440	220	4×19
32/5	18,5	153	150	464	50	32	290	404	200	1763	90	237	338	575	1048	710	1380	150	1080	-	480	440	220	4×19
	22	153	205	519	50	32	290	404	200	1783	90	237	338	593	1048	730	1380	150	1080	-	480	440	220	4×19
	30	153	250	564	50	32	290	404	200	1824	90	237	338	641	1048	771	1380	150	1080	-	480	440	220	4×19
	37	153	270	590	50	32	290	404	200	1824	90	237	338	641	1048	771	1380	150	1080	-	480	440	220	4×19
32/6	30	168	250	489	50	32	345	404	200	1879	90	237	338	641	1103	771	1440	150	1140	-	480	440	220	4×19
	37	168	270	509	50	32	345	404	200	1879	90	237	338	641	1103	771	1440	150	1140	-	480	440	220	4×19
	45	168	315	592	50	32	345	404	200	1928	90	237	363	675	1103	820	1460	150	1160	-	510	470	235	4×19
32/7	30	183	250	506	50	32	400	404	200	1934	90	237	338	641	1158	771	1500	150	1200	-	480	440	220	6×21
	37	183	270	526	50	32	400	404	200	1934	90	237	338	641	1158	771	1500	150	1200	-	480	440	220	6×21
	45	183	315	622	50	32	400	404	200	1983	90	237	383	641	1158	820	1520	150	1220	-	510	460	230	6×21
	55	183	420	713	50	32	400	404	200	2073	90	237	413	748	1158	910	1620	150	1320	-	580	530	260	6×21
32/8	37	198	270	596	50	32	455	404	200	1989	90	237	383	641	1213	771	1580	150	1280	-	510	470	235	6×21
	45	198	315	641	50	32	455	404	200	2038	90	237	383	641	1213	820	1580	150	1280	-	510	470	235	6×21
	55	198	420	731	50	32	455	404	200	2128	90	237	413	748	1213	910	1660	150	1360	680	580	530	265	6×21
32/9	45	213	315	646	50	32	510	404	200	2093	90	237	413	641	1268	820	1720	150	1420	710	580	530	265	6×21
	55	213	420	751	50	32	510	404	200	2183	90	237	413	748	1268	910	1720	150	1420	710	580	530	265	6×21
	75	213	551	921	50	32	510	404	200	2258	90	237	443	841	1268	985	1820	150	1520	760	640	590	295	6×21
32/10	45	228	315	669	50	32	565	404	200	2238	90	237	413	641	1323	910	1880	150	1380	690	580	530	265	6×21
	55	228	420	774	50	32	565	404	200	2238	90	237	413	748	1323	910	1880	150	1380	690	580	530	265	6×21
	75	228	551	940	50	32	565	404	200	2313	90	237	443	841	1323	985	1780	150	1480	740	640	590	295	6×21
32/11	45	243	315	722	50	32	620	404	200	2293	90	237	443	641	1378	910	1920	150	1620	810	640	590	295	6×21
	55	243	420	827	50	32	620	404	200	2293	90	237	443	748	1378	910	1920	150	1620	810	640	590	295	6×21
	75	243	551	958	50	32	620	404	200	2368	90	237	443	841	1378	985	1920	150	1620	810	640	590	295	6×21
32/12	55	258	420	845	50	32	675	404	200	2348	90	237	443	748	1433	910	1980	150	1680	840	640	590	295	6×21
	75	258	551	976	50	32	675	404	200	2423	90	237	443	841	1433	985	1980	150	1680	840	640	590	295	6×21
	90	258	625	1078	50	32	675	404	200	2473	90	237	443	841	1433	1035	1980	150	1680	840	640	590	295	6×21
32/13	55	273	420	845	50	32	730	404	200	2403	90	237	463	748	1488	910	2040	150	1740	870	640	590	295	6×21
	75	273	551	976	50	32	730	404	200	2478	90	237	463	841	1488	985	2040	150	1740	870	640	590	295	6×21
	90	273	625	1078	50	32	730	404	200	2528	90	237	463	841	1488	1035	2040	150	1740	870	640	590	295	6×21
32/14	75	288	551	1043	50	32	785	404	200	2533	90	237	463	841	1543	985	2100	150	1800	900	640	590	295	6×21
	90	288	625	1080	50	32	785	404	200	2583	90	237	463	841	1543	1035	2100	150	1800	900	640	590	295	6×21
	110	288	968	1412	50	32	785	404	200	2708	90	237	502	1032	1543	1160	2220	150	1920	960	710	660	330	6×21
32/15	75	303	551	1028	50	32	840	404	200	2588	90	237	463	841	1598	985	2160	150	1860	930	650	600	300	6×21
	90	303	625	1102	50	32	840	404	200	2638	90	237	463	861	1598	1035	2160	150	1860	930	650	600	300	6×21
	100	303	968	1432	50	32	840	404	200	2763	90	237	502	1032	1598	1160	2260	150	1960	980	710	660	330	6×21
32/16	75	318	551	1046	50	32	895	404	200	2643	90	237	463	841	1653	985	2200	150	1900	950	650	600	300	6×21
	90	318	625	1120	50	32	895	404	200	2693	90	237	463	861	1653	1035	2200	150	1900	950	650	600	300	6×21
	110	318	968	1451	50	32	895	404	200	2818	90	237	502	1032	1653	1160	2340	150	2040	1020	710	660	330	6×21

HPM/HPR 32

2.950 rpm - Oil lubrication

HPM/ HPR model	DIMENSIONS (mm)																							
	kW	kg P.	kg M.	kg Tot.	Dn_1	Dn_2	a	f	h_2	L	g_1	g_2	h_1	h_3	l_1	l_2	m	m_1	m_2	m_3	n	n_1	n_2	s
	90	333	625	1158	50	32	950	404	200	2748	90	237	463	861	1708	1035	2260	150	1960	980	650	600	300	6×21
32/17	110	333	968	1474	50	32	950	404	200	2873	90	237	502	1032	1708	1160	2400	150	2100	1050	710	660	330	6×21
	132	333	1100	1594	50	32	950	404	200	2903	90	237	502	1032	1708	1190	2400	150	2100	1050	710	660	330	6×21
	90	348	625	1158	50	32	1005	404	200	2803	90	237	463	861	1763	1035	2320	150	2020	1010	650	600	300	6×21
32/18	110	348	968	1491	50	32	1005	404	200	2928	90	237	502	1032	1763	1160	2440	150	2140	1070	710	660	330	6×21
	132	348	1100	1611	50	32	1005	404	200	2958	90	237	502	1032	1763	1190	2440	150	2140	1070	710	660	330	6×21
	90	363	625	1167	50	32	1060	404	200	2858	90	237	502	861	1818	1035	2500	150	2200	1100	710	660	330	6×21
32/19	110	363	968	1510	50	32	1060	404	200	2983	90	237	502	1032	1818	1160	2500	150	2200	1100	710	660	330	6×21
	132	363	1100	1630	50	32	1060	404	200	3013	90	237	502	1032	1818	1190	2500	150	2200	1100	710	660	330	6×21
	110	378	968	1540	50	32	1115	404	200	3038	90	237	522	1052	1873	1160	2550	150	2250	750	710	660	330	8×21
32/20	132	378	1100	1660	50	32	1115	404	200	3068	90	237	522	1052	1873	1190	2550	150	2250	750	710	660	330	8×21
	160	378	1161	1715	50	32	1115	404	200	3198	90	237	522	1052	1873	1320	2550	150	2250	750	710	660	330	8×21

HPM/HPR 50

2.950 rpm - Oil lubrication

HPM/ HPR model	DIMENSIONS (mm)																							
	kW	kg P.	kg M.	kg Tot.	Dn_1	Dn_2	a	f	h_2	L	g_1	g_2	h_1	h_3	l_1	l_2	m	m_1	m_2	m_3	n	n_1	n_2	s
	5,5	129	43	311	80	50	90	449	225	1395	90	319	338	455	980	410	1120	150	820	-	440	400	200	4×19
	7,5	129	73	320	80	50	90	449	225	1465	90	319	338	535	980	480	1120	150	820	-	440	400	200	4×19
50/1	11	129	120	328	80	50	90	449	225	1600	90	319	338	593	980	615	1120	150	820	-	440	400	200	4×19
	15	129	132	338	80	50	90	449	225	1600	90	319	338	593	980	615	1120	150	820	-	440	400	200	4×19
	18,5	129	150	353	80	50	90	449	225	1695	90	319	338	590	980	710	1120	150	820	-	440	400	200	4×19
	11	148	120	314	80	50	152	449	225	1600	90	319	338	593	980	615	1300	150	960	-	440	400	200	4×19
	15	148	132	324	80	50	152	449	225	1600	90	319	338	593	980	615	1300	150	960	-	440	400	200	4×19
50/2	18,5	148	150	339	80	50	152	449	225	1695	90	319	338	590	980	710	1300	150	960	-	440	400	200	4×19
	22	148	205	409	80	50	152	449	225	1304	90	319	338	608	980	319	1300	150	960	-	440	400	200	4×19
	30	148	250	457	80	50	152	449	225	1756	90	319	338	641	980	771	1300	150	1000	-	480	440	220	4×19
	37	148	270	483	80	50	152	449	225	1756	90	319	338	641	980	771	1300	150	1000	-	480	440	220	4×19
	22	167	205	414	80	50	214	449	225	1777	90	319	338	608	1042	730	1360	150	1060	-	480	440	220	4×19
50/3	30	167	250	459	80	50	214	449	225	1818	90	319	338	641	1042	771	1360	150	1060	-	480	440	220	4×19
	37	167	270	504	80	50	214	449	225	1818	90	319	338	641	1042	771	1360	150	1060	-	480	440	220	4×19
	45	167	315	592	80	50	214	449	225	1867	90	319	368	680	1042	820	1380	150	1080	-	520	480	240	4×19
	30	186	250	532	80	50	276	449	225	1880	90	319	368	671	1104	771	1440	150	1140	-	520	480	240	4×19
	37	186	270	552	80	50	276	449	225	1880	90	319	368	671	1104	771	1440	150	1140	-	520	480	240	4×19
50/4	45	186	315	597	80	50	276	449	225	1929	90	319	368	680	1104	820	1440	150	1140	-	520	480	240	4×19
	55	186	420	702	80	50	276	449	225	1929	90	319	368	680	1104	820	1440	150	1140	-	520	480	240	4×19
	75	186	551	833	80	50	276	449	225	2019	90	319	428	783	1104	910	1540	150	1240	620	560	520	260	6×21
	90	186	625	907	80	50	276	449	225	2094	90	319	448	846	1104	985	1640	150	1340	670	640	600	300	6×21
	37	205	270	597	80	50	338	449	225	1942	90	319	428	711	1166	771	1600	150	1300	650	570	530	265	6×21
	45	205	315	642	80	50	338	449	225	1991	90	319	428	720	1166	820	1600	150	1300	650	570	530	265	6×21
50/5	55	205	420	747	80	50	338	449	225	2081	90	319	428	783	1166	910	1600	150	1300	650	570	530	265	6×21
	75	205	551	909	80	50	338	449	225	2156	90	319	448	846	1166	985	1700	150	1400	700	640	600	300	6×21
	90	205	625	959	80	50	338	449	225	2206	90	319	468	846	1166	1035	1700	150	1400	700	640	600	300	6×21
	45	224	315	696	80	50	400	449	225	2053	90	319	448	760	1228	820	1760	150	1460	730	640	600	300	6×21
	55	224	420	801	80	50	400	449	225	2143	90	319	448	803	1228	910	1760	150	1460	730	640	600	300	6×21
50/6	75	224	551	932	80	50	400	449	225	2218	90	319	448	846	1228	985	1760	150	1460	730	640	600	300	6×21
	90	224	625	982	80	50	400	449	225	2268	90	319	448	846	1228	1035	1760	150	1460	730	640	600	300	6×21
	110	224	968	1310	80	50	400	449	225	2393	90	319	488	1018	1228	1160	1880	150	1580	790	680	640	320	6×21
	55	243	420	826	80	50	462	449	225	2205	90	319	448	803	1290	910	1820	150	1520	760	640	600	300	6×21
	75	243	551	957	80	50	462	449	225	2280	90	319	448	846	1290	985	1820	150	1520	760	640	600	300	6×21
50/7	90	243	625	1007	80	50	462	449	225	2330	90	319	448	846	1290	1035	1820	150	1520	760	640	600	300	6×21
	110	243	968	1334	80	50	462	449	225	2455	90	319	488	1018	1290	1160	1960	150	1660	830	680	640	320	6×21

HPM/ HPR model	DIMENSIONS (mm)																							
	kW	kg P.	kg M.	kg Tot.	Dn_1	Dn_2	a	f	h_2	L	g_1	g_2	h_1	h_3	l_1	l_2	m	m_1	m_2	m_3	n	n_1	n_2	s
50/8	75	262	551	953	80	50	524	449	225	2342	90	319	448	846	1352	985	1880	150	1580	790	640	600	300	6×21
	90	262	625	1027	80	50	524	449	225	2392	90	319	448	846	1352	1035	1880	150	1580	790	640	600	300	6×21
	110	262	968	1377	80	50	524	449	225	2517	90	319	508	1038	1352	1160	2020	150	1720	860	700	660	330	6×21
	132	262	1100	1502	80	50	524	449	225	2547	90	319	508	1038	1352	1190	2020	150	1720	860	700	660	330	6×21
50/9	75	281	551	976	80	50	586	449	225	2404	90	319	448	846	1414	985	1940	150	1640	820	640	600	300	6×21
	90	281	625	1050	80	50	586	449	225	2454	90	319	448	846	1414	1035	1940	150	1640	820	640	600	300	6×21
	110	281	968	1405	80	50	586	449	225	2579	90	319	508	1038	1414	1160	2080	150	1780	890	700	660	330	6×21
	132	281	1100	1525	80	50	586	449	225	2609	90	319	508	1038	1414	1190	2080	150	1780	890	700	660	330	6×21
	160	281	1161	1580	80	50	586	449	225	2739	90	319	508	1038	1414	1320	2080	150	1780	890	700	660	330	6×21
50/10	90	300	625	1085	80	50	648	449	225	2516	90	319	508	906	1476	1035	2140	150	1840	920	700	660	330	6×21
	110	300	968	1428	80	50	648	449	225	2641	90	319	508	1038	1476	1160	2140	150	1840	920	700	660	330	6×21
	132	300	1100	1548	80	50	648	449	225	2671	90	319	508	1038	1476	1190	2140	150	1840	920	700	660	330	6×21
	160	300	1161	1603	80	50	648	449	225	2801	90	319	508	1038	1476	1320	2140	150	1840	920	700	660	330	6×21
50/11	90	319	625	1108	80	50	710	449	225	2578	90	319	508	906	1538	1035	2220	150	1920	960	700	660	330	6×21
	110	319	968	1451	80	50	710	449	225	2703	90	319	508	1038	1538	1160	2220	150	1920	960	700	660	330	6×21
	132	319	1100	1571	80	50	710	449	225	2733	90	319	508	1038	1538	1190	2220	150	1920	960	700	660	330	6×21
	160	319	1161	1626	80	50	710	449	225	2863	90	319	508	1038	1538	1320	2220	150	1920	960	700	660	330	6×21
	200	319	1221	1681	80	50	710	449	225	2863	90	319	508	1038	1538	1320	2220	150	1920	960	700	660	330	6×21
50/12	110	338	968	1462	80	50	772	449	225	2765	90	319	508	1038	1600	1160	2280	150	1980	990	700	660	330	6×21
	132	338	1100	1594	80	50	772	449	225	2795	90	319	508	1038	1600	1190	2280	150	1980	990	700	660	330	6×21
	160	338	1161	1649	80	50	772	449	225	2925	90	319	508	1038	1600	1320	2280	150	1980	990	700	660	330	6×21
	200	338	1221	1704	80	50	772	449	225	2925	90	319	508	1038	1600	1320	2280	150	1980	990	700	660	330	6×21
50/13	110	357	968	1486	80	50	834	449	225	2827	90	319	508	1038	1662	1160	2340	150	2040	1020	700	660	330	6×21
	132	357	1100	1618	80	50	834	449	225	2857	90	319	508	1038	1662	1190	2340	150	2040	1020	700	660	330	6×21
	160	357	1161	1673	80	50	834	449	225	2987	90	319	508	1038	1662	1320	2340	150	2040	1020	700	660	330	6×21
	200	357	1221	1728	80	50	834	449	225	2987	90	319	508	1038	1662	1320	2340	150	2040	1020	700	660	330	6×21
	250	357	2090	2612	80	50	834	449	225	3167	90	319	542	1197	1662	1500	2500	150	2200	1100	800	760	380	6×21
50/14	132	376	1100	1636	80	50	896	449	225	2919	90	319	508	1038	1724	1190	2400	150	2100	1050	700	660	330	6×21
	160	376	1161	1697	80	50	896	449	225	3049	90	319	508	1038	1724	1320	2400	150	2100	1050	700	660	330	6×21
	200	376	1221	1752	80	50	896	449	225	3049	90	319	508	1038	1724	1320	2400	150	2100	1050	700	660	330	6×21
	250	376	2090	2602	80	50	896	449	225	3229	90	319	562	1217	1724	1500	2580	150	2280	1140	820	780	390	8×21
50/15	132	395	1100	1659	80	50	958	449	225	2981	90	319	508	1038	1786	1190	2460	150	2160	1080	700	660	330	6×21
	160	395	1161	1720	80	50	958	449	225	3111	90	319	508	1038	1786	1320	2460	150	2160	1080	700	660	330	6×21
	200	395	1221	1775	80	50	958	449	225	3111	90	319	508	1038	1786	1320	2460	150	2160	1080	700	660	330	6×21
	250	395	2090	2627	80	50	958	449	225	3291	90	319	562	1217	1786	1500	2640	150	2340	1170	820	780	390	8×21
50/16	160	414	1161	1770	80	50	1020	449	225	3173	90	319	528	1058	1848	1320	2520	150	2220	1110	710	670	335	6×21
	200	414	1221	1825	80	50	1020	449	225	3173	90	319	528	1058	1848	1320	2520	150	2220	1110	710	670	335	8×21
	250	414	2090	2652	80	50	1020	449	225	3353	90	319	562	1217	1848	1500	2700	150	2400	1200	820	780	390	8×21
50/17	160	433	1161	1748	80	50	1082	449	225	3235	90	319	528	1058	1910	1320	2580	150	2280	1140	710	670	335	8×21
	200	433	1221	1808	80	50	1082	449	225	3235	90	319	528	1058	1910	1320	2580	150	2280	1140	710	670	335	8×21
	250	433	2090	2677	80	50	1082	449	225	3415	90	319	562	1217	1910	1500	2760	150	2460	1230	820	780	390	8×21

HPM/HPR 80

2.950 rpm - Oil lubrication

HPM/ HPR model	DIMENSIONS (mm)																							
	kW	kg P.	kg M.	kg Tot.	Dn_1	Dn_2	a	f	h_2	L	g_1	g_2	h_1	h_3	l_1	l_2	m	m_1	m_2	m_3	n	n_1	n_2	s
80/1	11	191	120	385	125	80	120	473	250	1612	80	329	363	618	992	615	1300	150	1000	-	480	440	220	4×19
	15	191	132	395	125	80	120	473	250	1612	80	329	363	618	992	615	1300	150	1000	-	480	440	220	4×19
	18,5	191	150	410	125	80	120	473	250	1707	80	329	363	615	992	710	1300	150	1000	-	480	440	220	4×19
	22	191	205	480	125	80	120	473	250	1612	80	329	363	633	992	615	1300	150	1000	-	480	440	220	4×19
	30	191	250	525	125	80	120	473	250	1768	80	329	363	666	992	771	1300	150	1000	-	480	440	220	4×19
80/2	22	250	205	511	125	80	195	473	250	1687	80	329	393	663	1067	615	1500	150	1200	-	580	540	270	4×19
	30	250	250	556	125	80	195	473	250	1843	80	329	393	696	1067	771	1500	150	1200	-	580	540	270	4×19
	37	250	270	576	125	80	195	473	250	1843	80	329	393	696	1067	771	1500	150	1200	-	580	540	270	4×19
	45	250	315	621	125	80	195	473	250	1892	80	329	393	705	1067	820	1500	150	1200	-	580	540	270	4×19
	55	250	420	726	125	80	195	473	250	1982	80	329	393	748	1067	910	1500	150	1200	-	580	540	270	4×19
	75	250	551	922	125	80	195	473	250	2057	80	329	453	851	1067	985	1600	150	1300	650	640	600	300	6×21
80/3	45	279	315	718	125	80	270	473	250	1967	80	329	453	765	1142	820	1660	150	1360	680	640	600	300	6×21
	55	279	420	823	125	80	270	473	250	2057	80	329	453	765	1142	910	1660	150	1360	680	640	600	300	6×21
	75	279	551	954	125	80	270	473	250	2132	80	329	453	851	1142	985	1660	150	1360	680	640	600	300	6×21
	90	279	625	1004	125	80	270	473	250	2182	80	329	453	851	1142	1035	1660	150	1360	680	640	600	300	6×21
80/4	75	306	551	953	125	80	345	473	250	2207	80	329	493	848	1217	985	1880	150	1580	790	700	660	330	6×21
	90	306	625	1027	125	80	345	473	250	2257	80	329	493	891	1217	1035	1880	150	1580	790	700	660	330	6×21
	110	306	968	1370	125	80	345	473	250	2382	80	329	493	1023	1217	1160	1880	150	1580	790	700	660	330	6×21
	132	306	1100	1490	125	80	345	473	250	2412	80	329	493	1023	1217	1190	1880	150	1580	790	700	660	330	6×21
80/5	90	335	625	1046	125	80	420	473	250	2332	80	329	493	891	1292	1035	1960	150	1660	830	700	660	330	6×21
	110	335	968	1389	125	80	420	473	250	2457	80	329	493	1023	1292	1160	1960	150	1660	830	700	660	330	6×21
	132	335	1100	1521	125	80	420	473	250	2487	80	329	493	1023	1292	1190	1960	150	1660	830	700	660	330	6×21
	160	335	1161	1576	125	80	420	473	250	2617	80	329	493	1023	1292	1320	1960	150	1660	830	700	660	330	6×21
80/6	110	364	968	1438	125	80	495	473	250	2532	80	329	513	1023	1367	1160	2040	150	1740	870	720	680	340	6×21
	132	364	1100	1570	125	80	495	473	250	2562	80	329	513	1023	1367	1190	2040	150	1740	870	720	680	340	6×21
	160	364	1161	1631	125	80	495	473	250	2692	80	329	513	1043	1367	1320	2040	150	1740	870	720	680	340	6×21
	200	364	1221	1686	125	80	495	473	250	2692	80	329	513	1043	1367	1320	2040	150	1740	870	720	680	340	6×21
80/7	132	393	1100	1598	125	80	570	473	250	2637	80	329	513	1023	1442	1190	2120	150	1820	910	720	680	340	6×21
	160	393	1161	1659	125	80	570	473	250	2767	80	329	513	1043	1442	1320	2120	150	1820	910	720	680	340	6×21
	200	393	1221	1719	125	80	570	473	250	2767	80	329	513	1043	1442	1320	2120	150	1820	910	720	680	340	6×21
	250	393	2090	2556	125	80	570	473	250	2947	80	329	553	1208	1442	1500	2280	150	1980	990	820	780	390	6×21
80/8	160	423	1161	1698	125	80	645	473	250	2842	80	329	513	1043	1517	1320	2180	150	1880	940	700	660	330	6×21
	200	423	1221	1758	125	80	645	473	250	2842	80	329	513	1043	1517	1320	2180	150	1880	940	700	660	330	6×21
	250	423	2090	2590	125	80	645	473	250	3022	80	329	553	1208	1517	1500	2360	150	2060	1030	820	780	390	6×21
80/9	200	452	1221	1848	125	80	720	473	250	2917	80	329	553	1043	1592	1320	2460	150	2160	1080	820	780	390	6×21
	250	452	2090	2717	125	80	720	473	250	3097	80	329	553	1208	1592	1500	2460	150	2160	1080	820	780	390	6×21
	315	452	2530	3157	125	80	720	473	250	3097	80	329	553	1208	1592	1500	2460	150	2160	1080	820	780	390	6×21
80/10	200	481	1221	1884	125	80	795	473	250	2992	80	329	553	1043	1667	1320	2500	150	2200	1100	820	780	390	6×21
	250	481	2090	2753	125	80	795	473	250	3172	80	329	553	1208	1667	1500	2500	150	2200	1100	820	780	390	6×21
	315	481	2530	3193	125	80	795	473	250	3172	80	329	553	1208	1667	1500	2500	150	2200	1100	820	780	390	6×21
80/11	250	510	2090	2789	125	80	870	473	250	3247	80	329	573	1208	1742	1500	2560	150	2260	1130	820	780	390	8×21
	315	510	2530	3229	125	80	870	473	250	3247	80	329	573	1228	1742	1500	2560	150	2260	1130	820	780	390	8×21
	355	510	2000	2699	125	80	870	473	250	3156	80	329	573	1151	1742	1409	2560	150	2260	1130	820	780	390	8×21
80/12	250	539	2090	2825	125	80	945	473	250	3322	80	329	573	1208	1817	1500	2670	150	2370	1185	840	800	400	8×21
	315	539	2530	3265	125	80	945	473	250	3322	80	329	573	1228	1817	1500	2670	150	2370	1185	840	800	400	8×21
	355	539	2000	2735	125	80	945	473	250	3231	80	329	573	1151	1817	1409	2670	150	2370	1185	840	800	400	8×21
80/13	315	569	2530	3305	125	80	1020	473	250	3397	80	329	573	1228	1892	1500	2730	150	2430	1215	840	800	400	8×21
	355	569	2000	2785	125	80	1020	473	250	3687	80	329	573	1151	1892	1790	2730	150	2430	1215	840	800	400	8×21

HPM/ HPR model	DIMENSIONS (mm)																							
	kW	kg P.	kg M.	kg Tot.	Dn_1	Dn_2	a	f	h_2	L	g_1	g_2	h_1	h_3	l_1	l_2	m	m_1	m_2	m_3	n	n_1	n_2	s
100/1	22	281	205	579	150	100	145	528	315	1721	70	348	393	663	1101	615	1500	150	1200	650	600	560	280	4×19
	30	281	250	624	150	100	145	528	315	1877	70	348	393	696	1101	771	1500	150	1200	650	600	560	280	4×19
	37	281	270	644	150	100	145	528	315	1877	70	348	393	696	1101	771	1500	150	1200	650	600	560	280	4×19
	45	281	315	689	150	100	145	528	315	1926	70	348	393	705	1101	820	1500	150	1200	650	600	560	280	4×19
	55	281	420	794	150	100	145	528	315	2016	70	348	393	748	1101	910	1500	150	1200	650	600	560	280	4×19
	75	281	551	973	150	100	145	528	315	2091	70	348	443	841	1101	985	1600	150	1300	650	740	700	350	6×21
100/2	55	326	420	896	150	100	235	528	315	2016	70	348	503	815	1191	820	1820	150	1520	760	740	700	350	6×21
	75	326	551	1027	150	100	235	528	315	2106	70	348	503	858	1191	910	1820	150	1520	760	740	700	350	6×21
	90	326	625	1101	150	100	235	528	315	2181	70	348	503	901	1191	985	1820	150	1520	760	740	700	350	6×21
	110	326	968	1444	150	100	235	528	315	2356	70	348	503	1033	1191	1160	1820	150	1520	760	740	700	350	6×21
	132	326	1100	1564	150	100	235	528	315	2386	70	348	503	1033	1191	1190	1820	150	1520	760	740	700	350	6×21
100/3	90	371	625	1137	150	100	325	528	315	2271	70	348	503	901	1281	985	1920	150	1620	810	740	700	350	6×21
	110	371	968	1480	150	100	325	528	315	2446	70	348	503	1033	1281	1160	1920	150	1620	810	740	700	350	6×21
	132	371	1100	1612	150	100	325	528	315	2476	70	348	503	1033	1281	1190	1920	150	1620	810	740	700	350	6×21
	160	371	1161	1673	150	100	325	528	315	2606	70	348	503	1033	1281	1320	1920	150	1620	810	740	700	350	6×21
	200	371	1221	1728	150	100	325	528	315	2606	70	348	503	1033	1281	1320	1920	150	1620	810	740	700	350	6×21
100/4	160	416	1161	1723	150	100	415	528	315	2696	70	348	503	1033	1371	1320	2000	150	1700	850	740	700	350	6×21
	200	416	1221	1783	150	100	415	528	315	2696	70	348	503	1033	1371	1320	2000	150	1700	850	740	700	350	6×21
	250	416	2090	2622	150	100	415	528	315	2876	70	348	563	1218	1371	1500	2180	150	1880	940	820	780	390	6×21
100/5	160	461	1161	1846	150	100	505	528	315	2786	70	348	563	1093	1461	1320	2280	150	1980	990	820	780	390	6×21
	200	461	1221	1906	150	100	505	528	315	2786	70	348	563	1093	1461	1320	2280	150	1980	990	820	780	390	6×21
	250	461	2090	2775	150	100	505	528	315	2966	70	348	563	1218	1461	1500	2280	150	1980	990	820	780	390	6×21
	315	461	2530	3215	150	100	505	528	315	2966	70	348	563	1218	1461	1500	2280	150	1980	990	820	780	390	6×21
100/6	250	506	2090	2845	150	100	595	528	315	3056	70	348	563	1218	1551	1500	2360	150	2060	1030	820	780	390	6×21
	315	506	2530	3285	150	100	595	528	315	3056	70	348	563	1218	1551	1500	2360	150	2060	1030	820	780	390	6×21
	355	506	2000	2755	150	100	595	528	315	3346	70	348	563	1167	1551	1790	2360	150	2060	1030	820	780	390	6×21
	400	506	2300	3055	150	100	595	528	315	3486	70	348	563	1167	1551	1930	2360	150	2060	1030	820	780	390	6×21
100/7	315	551	2530	3345	150	100	685	528	315	3146	70	348	563	1218	1641	1500	2460	150	2160	1080	820	780	390	6×21
	355	551	2000	2815	150	100	685	528	315	3436	70	348	563	1167	1641	1790	2460	150	2160	1080	820	780	390	6×21
	400	551	2300	3115	150	100	685	528	315	3576	70	348	563	1167	1641	1930	2460	150	2160	1080	820	780	390	6×21
	450	551	2400	3215	150	100	685	528	315	3576	70	348	563	1167	1641	1930	2460	150	2160	1080	820	780	390	6×21
100/8	315	596	2530	3415	150	100	775	528	315	3236	70	348	583	1218	1731	1500	2550	150	2250	750	820	780	390	8×21
	355	596	2000	2885	150	100	775	528	315	3526	70	348	583	1138	1731	1790	2550	150	2250	750	820	780	390	8×21
	400	596	2300	3185	150	100	775	528	315	3666	70	348	583	1138	1731	1930	2550	150	2250	750	820	780	390	8×21
	450	596	2400	3285	150	100	775	528	315	3666	70	348	583	1138	1731	1930	2550	150	2250	750	820	780	390	8×21
	500	596	2550	3435	150	100	775	528	315	3666	70	348	583	1173	1731	1930	2550	150	2250	750	820	780	390	8×21
100/9	355	641	2000	2944	150	100	865	528	315	3616	70	348	583	1158	1821	1790	2640	150	2340	780	820	780	390	8×21
	400	641	2300	3244	150	100	865	528	315	3756	70	348	583	1158	1821	1930	2640	150	2340	780	820	780	390	8×21
	450	641	2400	3344	150	100	865	528	315	3756	70	348	583	1158	1821	1930	2640	150	2340	780	820	780	390	8×21
	500	641	2550	3494	150	100	865	528	315	3756	70	348	583	1193	1821	1930	2640	150	2340	780	820	780	390	8×21
100/10	400	686	2300	3314	150	100	955	528	315	3846	70	348	583	1158	1911	1930	2730	150	2430	810	820	780	390	8×21
	450	686	2400	3414	150	100	955	528	315	3846	70	348	583	1158	1911	1930	2730	150	2430	810	820	780	390	8×21
	500	686	2550	3564	150	100	955	528	315	3846	70	348	583	1193	1911	1930	2730	150	2430	810	820	780	390	8×21
	560	686	3150	4164	150	100	955	528	315	4011	70	348	583	1193	1911	2095	2730	150	2430	810	820	780	390	8×21

HPM/HPR 125

2.950 rpm - Oil lubrication

HPM/ HPR model	DIMENSIONS (mm)																							
	kW	kg P.	kg M.	kg Tot.	Dn_1	Dn_2	a	f	h_2	L	g_1	g_2	h_1	h_3	l_1	l_2	m	m_1	m_2	m_3	n	n_1	n_2	s
	90	486	625	1337	200	125	185	644	350	2332	50	463	482	880	1342	985	1920	150	1620	810	740	700	350	6×21
	110	486	968	1680	200	125	185	644	350	2507	50	463	482	1012	1342	1160	1920	150	1620	810	740	700	350	6×21
125/1	132	486	1100	1812	200	125	185	644	350	2537	50	463	482	1012	1342	1190	1920	150	1620	810	740	700	350	6×21
	160	486	1161	1873	200	125	185	644	350	2667	50	463	482	1012	1342	1320	1920	150	1620	810	740	700	350	6×21
	200	486	1221	1933	200	125	185	644	350	2667	50	463	482	1012	1342	1320	1920	150	1620	810	740	700	350	6×21
	160	567	1161	1986	200	125	295	644	350	2777	50	463	542	1072	1452	1320	2200	150	1900	950	820	780	390	6×21
	200	567	1221	2046	200	125	295	644	350	2777	50	463	542	1072	1452	1320	2200	150	1900	950	820	780	390	6×21
125/2	250	567	2090	2915	200	125	295	644	350	2957	50	463	542	1197	1452	1500	2200	150	1900	950	820	780	390	6×21
	315	567	2530	3355	200	125	295	644	350	2957	50	463	542	1197	1452	1500	2200	150	1900	950	820	780	390	6×21
	355	567	2000	2825	200	125	295	644	350	3247	50	463	542	1087	1452	1790	2200	150	1900	950	820	780	390	6×21
	400	567	2300	3125	200	125	295	644	350	3387	50	463	542	1117	1452	1930	2200	150	1900	950	820	780	390	6×21
	315	648	2530	3458	200	125	405	644	350	3067	50	463	542	1197	1562	1500	2320	150	2020	1010	820	780	390	6×21
	355	648	2000	2928	200	125	405	644	350	3357	50	463	542	1087	1562	1790	2320	150	2020	1010	820	780	390	6×21
	400	648	2300	3228	200	125	405	644	350	3497	50	463	542	1117	1562	1930	2320	150	2020	1010	820	780	390	6×21
125/3	450	648	2400	3328	200	125	405	644	350	3497	50	463	542	1117	1562	1930	2320	150	2020	1010	820	780	390	6×21
	510	648	2550	3478	200	125	405	644	350	3497	50	463	542	1117	1562	1930	2320	150	2020	1010	820	780	390	6×21
	560	648	3150	4078	200	125	405	644	350	3662	50	463	542	1152	1562	2095	2320	150	2020	1010	820	780	390	6×21
	650	648	3300	4228	200	125	405	644	350	3662	50	463	612	1222	1562	2095	2730	150	2430	810	980	940	470	8×21
	450	729	2400	3437	200	125	515	644	350	3607	50	463	612	1117	1672	1930	2820	150	2520	840	980	940	470	8×21
	510	729	2550	3587	200	125	515	644	350	3607	50	463	612	1117	1672	1930	2820	150	2520	840	980	940	470	8×21
125/ 4	560	729	3150	4187	200	125	515	644	350	3772	50	463	612	1152	1672	2095	2820	150	2520	840	980	940	470	8×21
	650	729	3300	4337	200	125	515	644	350	3772	50	463	612	1222	1672	2095	2820	150	2520	840	980	940	470	8×21
	750	729	3550	4587	200	125	515	644	350	3772	50	463	612	1222	1672	2095	2820	150	2520	840	980	940	470	8×21
	820	729	4600	5637	200	125	515	644	350	3997	50	463	612	1262	1672	2320	2820	150	2520	840	980	940	470	8×21
	650	810	3300	4444	200	125	625	644	350	3882	50	463	612	1222	1782	2095	2940	150	2640	880	980	940	470	8×21
	750	810	3550	4694	200	125	625	644	350	3882	50	463	612	1222	1782	2095	2940	150	2640	880	980	940	470	8×21
125/5	820	810	4600	5744	200	125	625	644	350	4107	50	463	612	1482	1782	2320	2940	150	2640	880	980	940	470	8×21
	940	810	4900	6044	200	125	625	644	350	4107	50	463	682	1507	1782	2320	3300	150	3000	1000	1060	1020	510	8×21
	1030	810	5200	6344	200	125	625	644	350	4107	50	463	682	1507	1782	2320	3300	150	3000	1000	1060	1020	510	8×21

HPM 150

2.950 rpm - Oil lubrication

HPM model	DIMENSIONS (mm)																							
	kW	kg P.	kg M.	kg Tot.	Dn_1	Dn_2	a	f	h_2	L	g_1	g_2	h_1	h_3	l_1	l_2	m	m_1	m_2	m_3	n	n_1	n_2	s
150/1	200	969	1221	2418	250	150	235	629,5	420	2697,5	40	398	553	1083	1372,5	1320	2140	150	1840	920	840	800	400	6×21
	250	969	2090	3287	250	150	235	629,5	420	2877,5	40	398	553	1208	1372,5	1500	2140	150	1840	920	840	800	400	6×21
	315	969	2530	3727	250	150	235	629,5	420	2877,5	40	398	553	1208	1372,5	1500	2140	150	1840	920	840	800	400	6×21
	355	969	2000	3197	250	150	235	629,5	420	3167,5	40	398	553	1098	1372,5	1790	2140	150	1840	920	840	800	400	6×21
	400	969	2300	3497	250	150	235	629,5	420	3307,5	40	398	553	1128	1372,5	1930	2140	150	1840	920	840	800	400	6×21
	450	969	2400	3597	250	150	235	629,5	420	3307,5	40	398	553	1128	1372,5	1930	2140	150	1840	920	840	800	400	6×21
	510	969	2550	3747	250	150	235	629,5	420	3307,5	40	398	553	1128	1372,5	1930	2140	150	1840	920	840	800	400	6×21
150/2	400	1105	2300	3668	250	150	370	629,5	420	3302,5	40	398	682	1257	1507,5	1790	3030	150	2730	910	1080	1040	520	8×21
	450	1105	2400	3768	250	150	370	629,5	420	3442,5	40	398	682	1257	1507,5	1930	3030	150	2730	910	1080	1040	520	8×21
	510	1105	2550	3918	250	150	370	629,5	420	3442,5	40	398	682	1257	1507,5	1930	3030	150	2730	910	1080	1040	520	8×21
	560	1105	3150	4518	250	150	370	629,5	420	3607,5	40	398	682	1292	1507,5	2095	3030	150	2730	910	1080	1040	520	8×21
	650	1105	3300	4668	250	150	370	629,5	420	3607,5	40	398	682	1292	1507,5	2095	3030	150	2730	910	1080	1040	520	8×21
	750	1105	3550	4918	250	150	370	629,5	420	3607,5	40	398	682	1292	1507,5	2095	3030	150	2730	910	1080	1040	520	8×21
	820	1105	4600	5968	250	150	370	629,5	420	3832,5	40	398	682	1332	1507,5	2320	3030	150	2730	910	1080	1040	520	8×21
	940	1105	4900	6268	250	150	370	629,5	420	3832,5	40	398	682	1332	1507,5	2320	3030	150	2730	910	1080	1040	520	8×21
	1030	1105	5200	6568	250	150	370	629,5	420	3832,5	40	398	682	1332	1507,5	2320	3030	150	2730	910	1080	1040	520	8×21
	1200	1105	6100	7468	250	150	370	629,5	420	4187,5	40	398	752	1432	1507,5	2675	3540	150	3240	1080	1220	1180	590	8×21
150/3	650	1241	3300	4832	250	150	505	629,5	420	3742,5	40	398	682	1292	1642,5	2095	3150	150	2850	950	1080	1040	520	8×21
	750	1241	3550	5082	250	150	505	629,5	420	3742,5	40	398	682	1292	1642,5	2095	3150	150	2850	950	1080	1040	520	8×21
	820	1241	4600	6132	250	150	505	629,5	420	3967,5	40	398	682	1332	1642,5	2320	3150	150	2850	950	1080	1040	520	8×21
	940	1241	4900	6432	250	150	505	629,5	420	3967,5	40	398	682	1332	1642,5	2320	3150	150	2850	950	1080	1040	520	8×21
	1030	1241	5200	6732	250	150	505	629,5	420	3967,5	40	398	682	1332	1642,5	2320	3150	150	2850	950	1080	1040	520	8×21
	1200	1241	6100	7632	250	150	505	629,5	420	4322,5	40	398	752	1452	1642,5	2675	3690	150	3390	1130	1220	1180	590	8×21
	1300	1241	6300	7832	250	150	505	629,5	420	4322,5	40	398	752	1452	1642,5	2675	3690	150	3390	1130	1220	1180	590	8×21
	1420	1241	6700	8232	250	150	505	629,5	420	4322,5	40	398	752	1452	1642,5	2675	3690	150	3390	1130	1220	1180	590	8×21
	1680	1241	8200	9732	250	150	505	629,5	420	4512,5	40	398	812	1562	1642,5	2865	3540	150	3240	1080	1400	1360	680	8×21
150/4	1030	1377	5200	6905	250	150	640	629,5	420	4102,5	40	398	812	1462	1777,5	2320	3690	150	3390	1130	1400	1360	680	8×21
	1200	1377	6100	7805	250	150	640	629,5	420	4457,5	40	398	812	1512	1777,5	2675	3690	150	3390	1130	1400	1360	680	8×21
	1300	1377	6300	8005	250	150	640	629,5	420	4457,5	40	398	812	1512	1777,5	2675	3690	150	3390	1130	1400	1360	680	8×21
	1420	1377	6700	8405	250	150	640	629,5	420	4457,5	40	398	812	1512	1777,5	2675	3690	150	3390	1130	1400	1360	680	8×21
	1680	1377	8200	9905	250	150	640	629,5	420	4647,5	40	398	812	1562	1777,5	2865	3690	150	3390	1130	1400	1360	680	8×21
	1900	1377	8600	10305	250	150	640	629,5	420	4647,5	40	398	812	1562	1777,5	2865	3690	150	3390	1130	1400	1360	680	8×21

HV

Grease lubrication

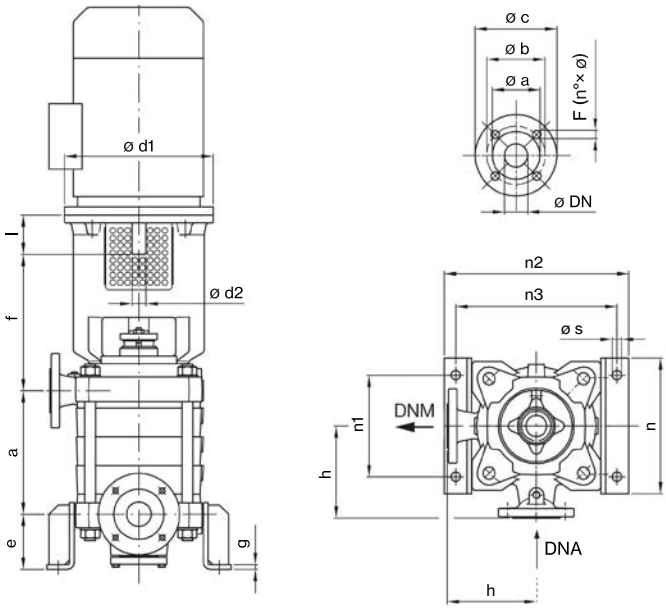

motor type		motor dimensions (mm)		
size	poles	ø d1	ø d2	l
100	2...8	250	28	60
112	2...8	250	28	60
132	2...8	300	38	80
160	2...8	350	42	110
180	2...8	350	48	110
200	2...8	400	55	110
225	2	450	55	110
	4...8		60	140
250	2	550	60	140
	4...8		65	
280	2	550	65	140
	4...8		75	
315	2	660	65	140
	4...8		80	170
355	2	800	75	140
	4...8		100	210

TYPE	a - pump dimension (mm)													
	n. of stages													
	1	2	3	4	5	6	7	8	9	10	11	12	13	14
HV 25	55	100	145	190	235	280	325	370	415	460	505	550	595	640
HV 32	70	125	180	235	290	345	400	455	510	565	620			
HV 50	90	152	214	276	338	400	462	524	586	648				
HV 80	120	195	270	345	420	495	570	645						
HV 100	145	235	325	415	505	595								
HV 125	185	295	405	515	625									
HV 150	235	370	505	640										
HV 250	310	505												

TYPE	pump dimensions (mm)			feet dimensions (mm)					
	e	f	h	g	n	n1	n2	n3	s
HV 25	190	275,5	165	6	260	210	360	310	17
HV 32	150	365	200	6	300	250	400	350	17
HV 50	160	400	225	6	350	300	550	500	20
HV 80	190	420	250	10	400	340	500	440	23
HV 100	180	472	315	10	450	390	650	540	23
HV 125	250	590	350	10	600	480	810	730	27
HV 150	270	665	420	10	650	580	850	780	27

TYPE	suction flange UNI - DIN PN16 (mm)					discharge flange UNI - DIN PN63 (mm)				
	DNA	a	b	c	F	DNM	a	b	c	F
HV 25	40	88	110	150	4×18	25	68	100	140	4×18
HV 32	50	102	125	165	4×18	32	78	110	155	4×22
HV 50	80	138	160	200	8×18	50	102	135	180	4×22
HV 80	125	188	210	250	8×18	80	138	170	215	8×22
HV 100	150	212	240	285	8×22	100	162	200	250	8×26
HV 125	200	268	295	340	12×22	125	188	240	295	8×30
HV 150	250	320	355	405	12×26	150	218	280	345	8×33
HV 250	300	378	410	460	12×26	250	345	400	470	12×36

TYPE	pump weight (Kg)																								
	n. of stages																								
	1	2	3	4	5	6	7	8	9	10	11	12	13	14	15	16	17	18	19	20	21	22	23	24	25
HV 25	42	51	60	69	78	87	96	105	114	123	132	141	150	159											
HV 32	108	123	138	153	168	183	198	213	228	243	258														
HV 50	151	170	189	208	227	246	265	284	303	322															
HV 80	158	187	216	245	274	303	332	361																	
HV 100	332	377	422	467	512	557																			
HV 125	514	595	676	757	838																				
HV 150	918	1054	1190	1326																					
HV 250	1447	1763																							

SPARE PARTS AND REFERENCE CODES

HPA 25 grease lubrication

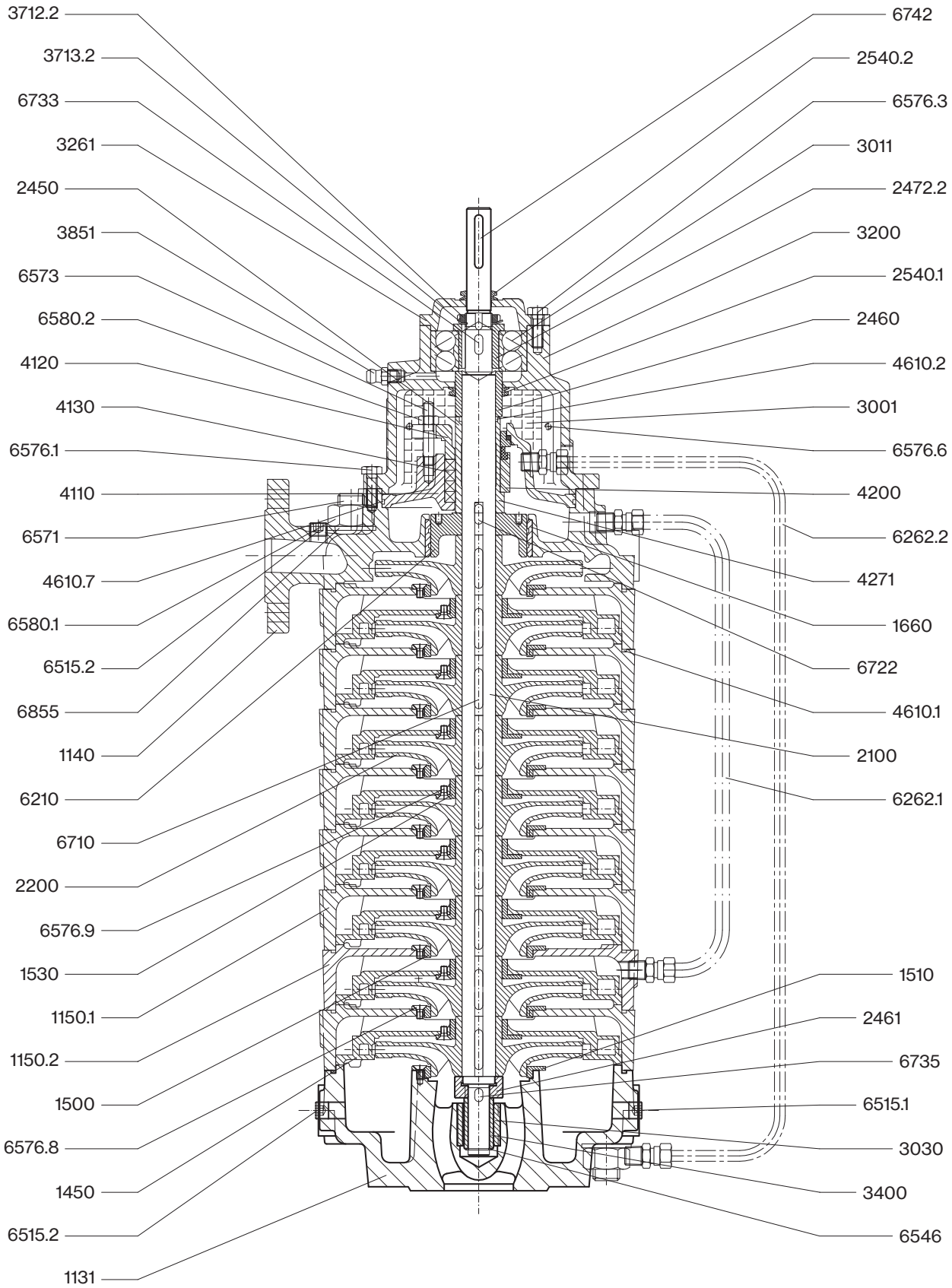

MARLY

HPA 32-50-80-100-125-150 grease lubrication

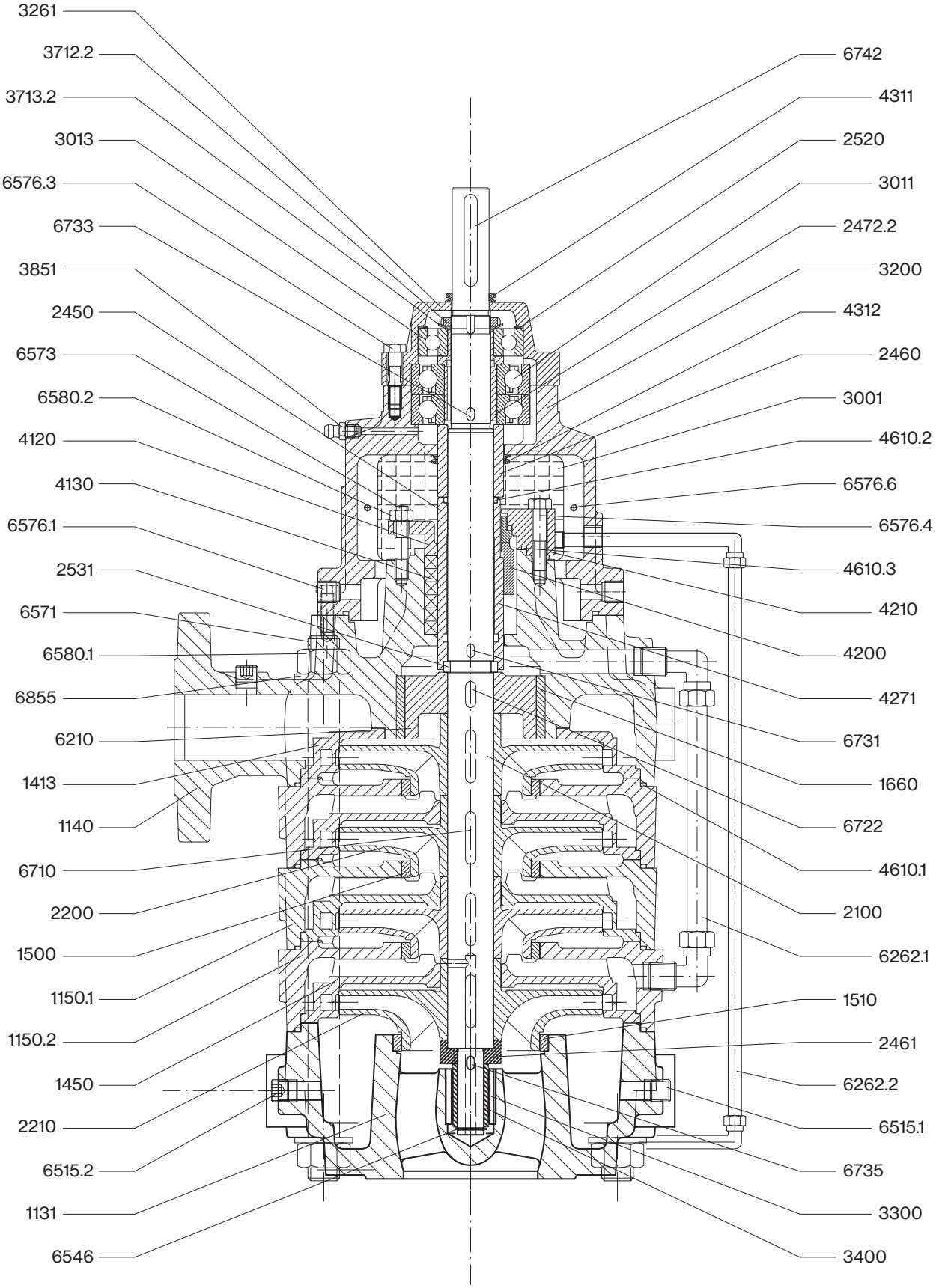

HPA 125-150 grease lubrication

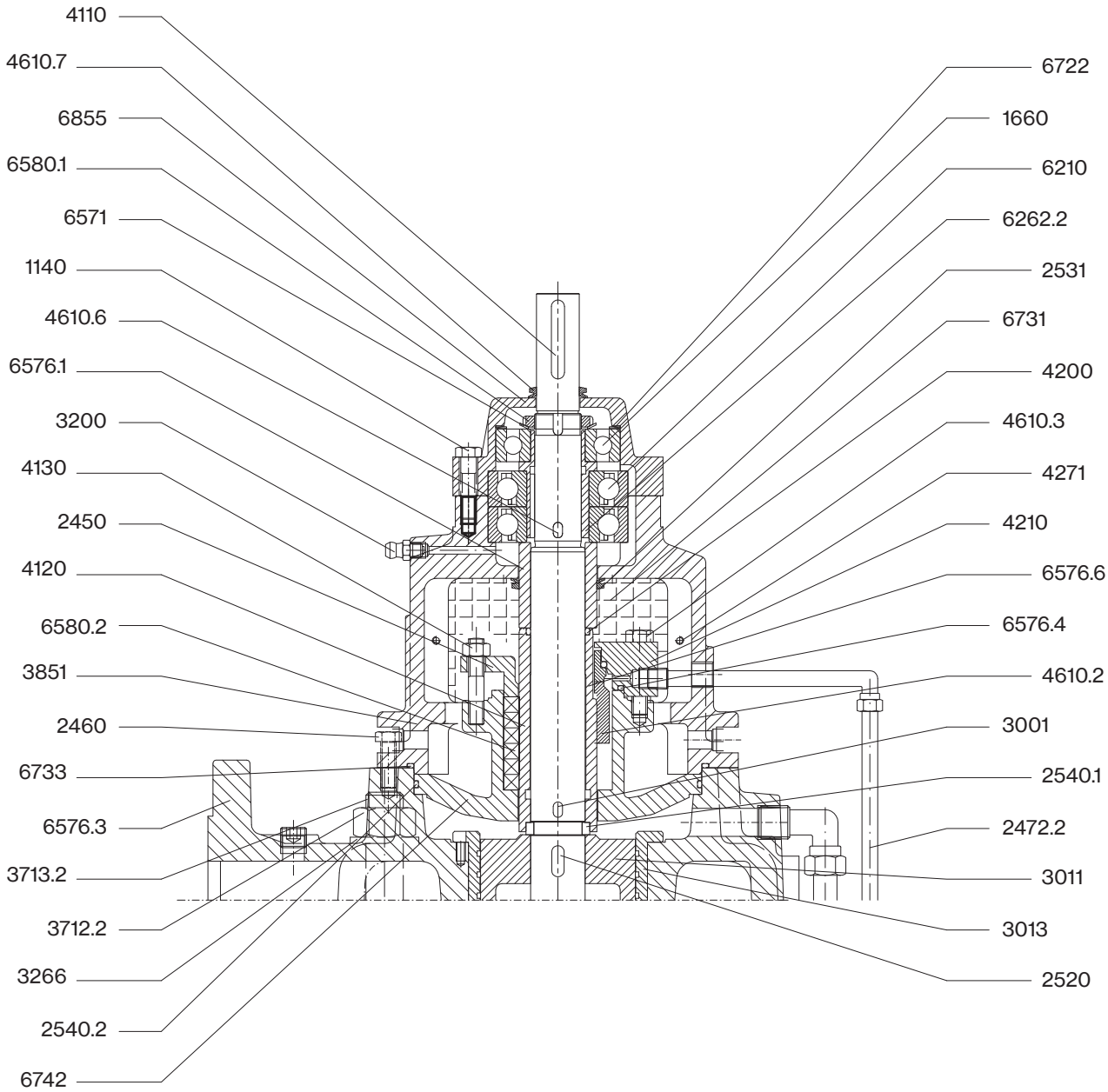

MARLY

HPA 25-32-50-80-100-125-150 grease lubrication

Ref.	Part Description	Recomanded spare part	Q.ty
1131	Suction casing for axial execution		
1140	Discharge casing		
1150.1	Stage casing		
1150.2	Stage casing		
1413	Diffuser last stage		
1530	KIT diffusers Wear rings	Yes	1
1450	Diffuser		
1500/10	KIT Wear ring impeller	Yes	1
1660	Discharge casing bush	Yes	1
2100	Shaft		
2101	Oil curculator		
2200	Impeller		
2210	Impeller suction stage		
2450	Gland packing Shaft sleeve	Yes	1
2460/1	KIT Space sleeves	Yes	1
2472.2	Shaft sleeve bearing	Yes	1
2520	Shoulder ring		
2540.1-2	KT Trowers	Yes	1
2531	Retaing ring aplit		
3001	Safety net		
3011/13	KIT Radial ball bearings	Yes	1
3200	Bearing housing		
3261	Bearing cover drive size		
3262	Bearing cover pump size		
3300	Bearing Bushing	Yes	1
3400	Shaft-Sleeve Bearings	Yes	1
3712.2	Bearings Lockwasher		
3713.2	Washer	Yes	1
3851	Greaser		
3854	Oil plug		
4110	Seal Housing		
4120	Gland		
4130	Gland packing	Yes	1
4200	Mechanical seal	Yes	1
4210	Flange mechanical seal		
4271	Shaft sleeve mechanical seal	Yes	1
4311-2	KIT Radial shaft seal	Yes	1
4610.1-7	KIT O-Ring	Yes	1
6210	Balance Drum		
6262.1	Balance drum pipe		
6262.2	Mechanical seal pipe		
6515.1-5	KIT Plugs	Yes	1
6546	Seeger	Yes	1
6571	Tie rods		
6573	Tie bolt		
6576.1-9	KIT screws		
6580.1-2	KIT Nuts		
6701-42	KIT Keys	Yes	1
6855	Washer		

HP 25 grease lubrication

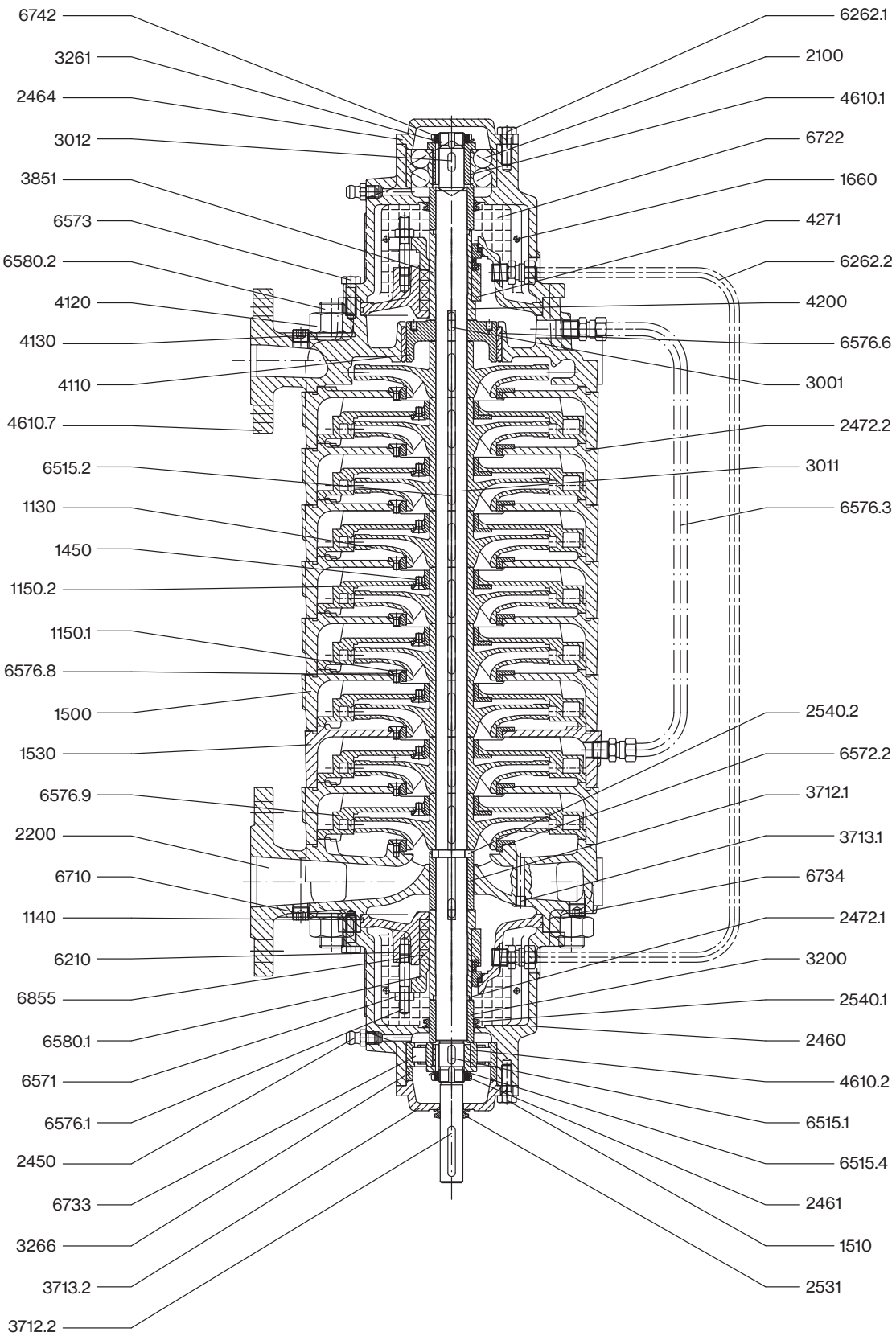

MARLY

HP 32-50-80-100-125-150 grease lubrication

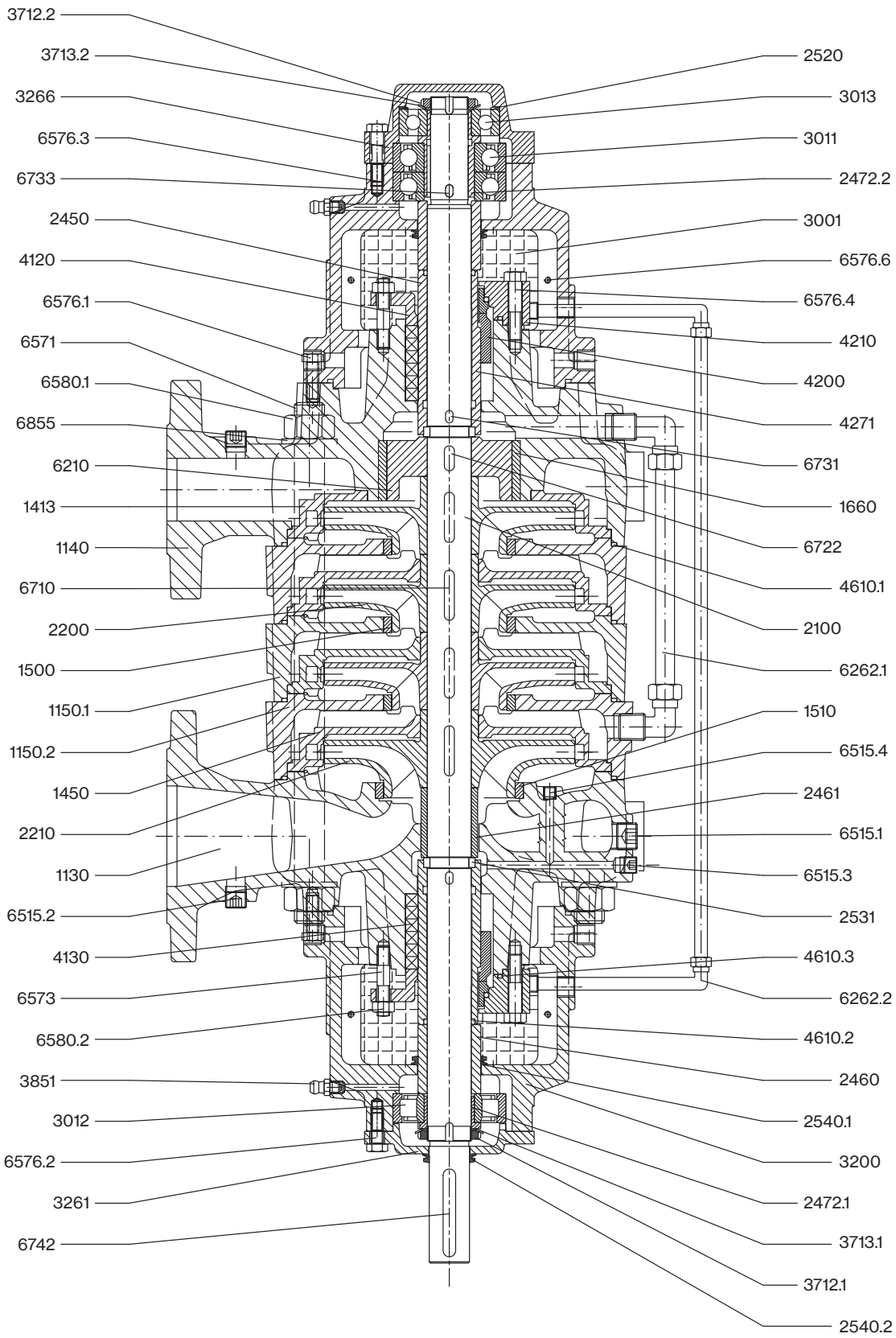

HP 125-150 grease lubrication

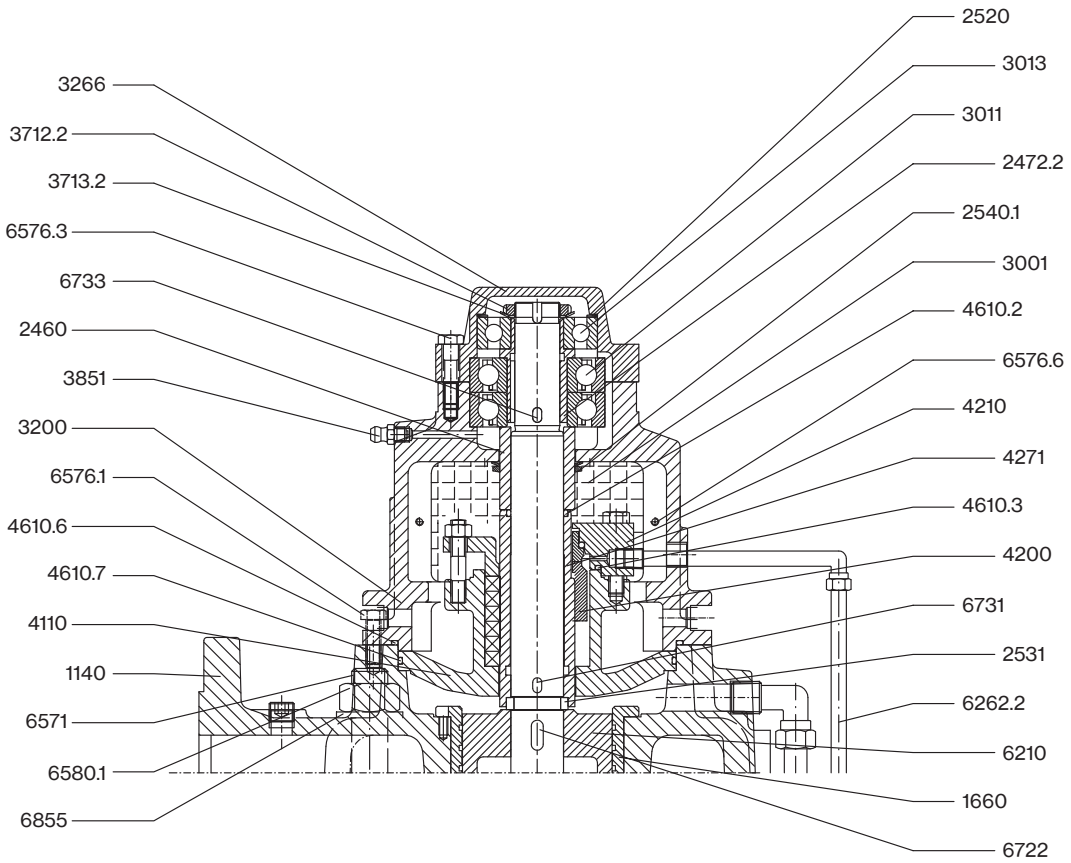

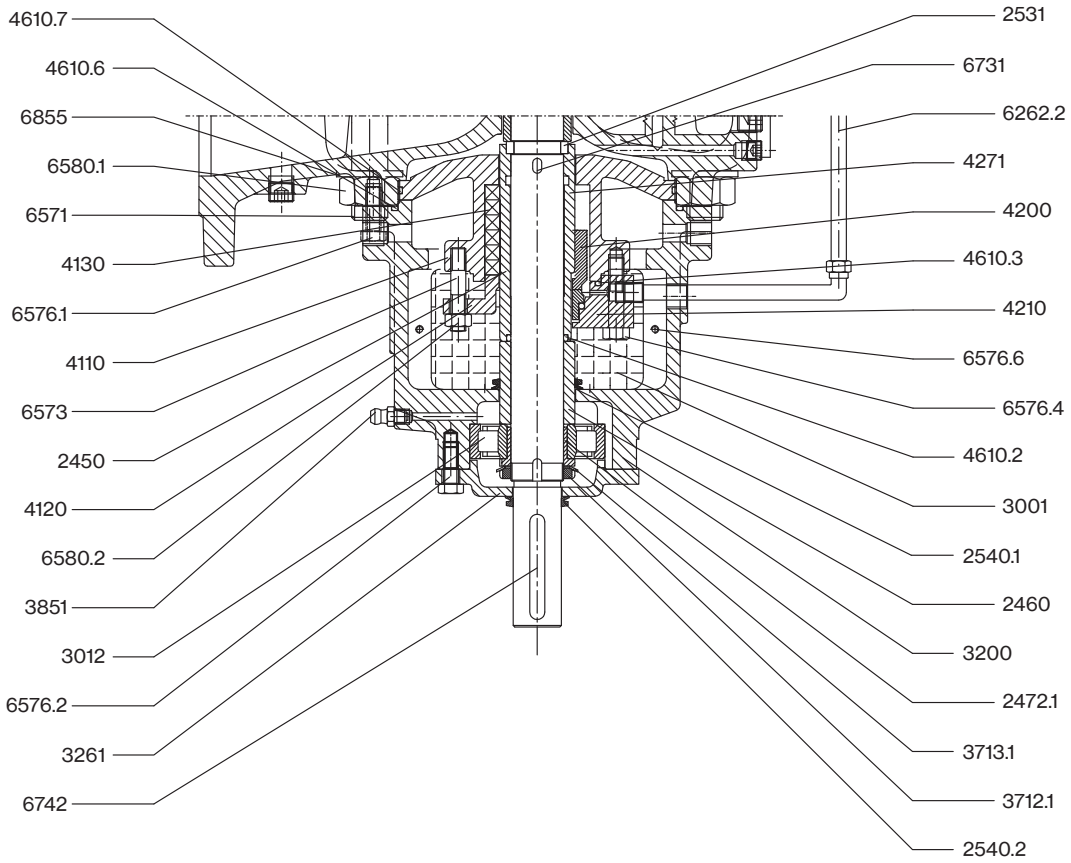

MARLY

HP 25-32-50-80-100-125-150 grease lubrication

Ref.	Part Description	Recomanded spare part	Q.ty
1130	Suction casing		
1140	Discharge casing		
1150.1	Stage casing		
1150.2	Stage casing		
1413	Diffuser last stage		
1450	Diffuser		
1500	Kit Wear rings impeller	Yes	1
1660	Discharge casing bush	Yes	1
2100	Shaft		
2200	Impeller		
2210	Impeller suction stage		
2520	Shoulder ring	Yes	1
2450	Shaft sleeve	Yes	1
2460	Kit Space sleeve	Yes	1
2472.1	Kit Shaft sleeve bearing	Yes	1
2531	Retaing Split ring		
2540.1	Kit Trower	Yes	1
3001	Safety net		
3011	Kit Ball and Roller bearings	Yes	1
3200	Bearing housing		
3261	Bearing cover drive size		
3266	Bearing end cover		
3712.1	Kit Bearing nut and lockwasher	Yes	1
3851	Grease cup		
4110	Seal box		
4120	Gland		
4130	Gland paking	Yes	1
4200	Mechanical seal	Yes	1
4210	Flange mechanical seal		
4271	Shaft sleeve m. seal	Yes	1
4610.1	Kit O-Rings	Yes	1
6210	Balance disc		
6262.1	Drum feeding pipe		
6262.2	Mechanical seal flushing pipe		
6515.1	Kit Plugs		
6571	Tie bolt		
6573	Gland tie		
6576.1-9	Kit Screw		
6580.1-2	Kit Nut		
6710	Kit Keys	Yes	1
6855	Washer		

HP 250 grease lubrication

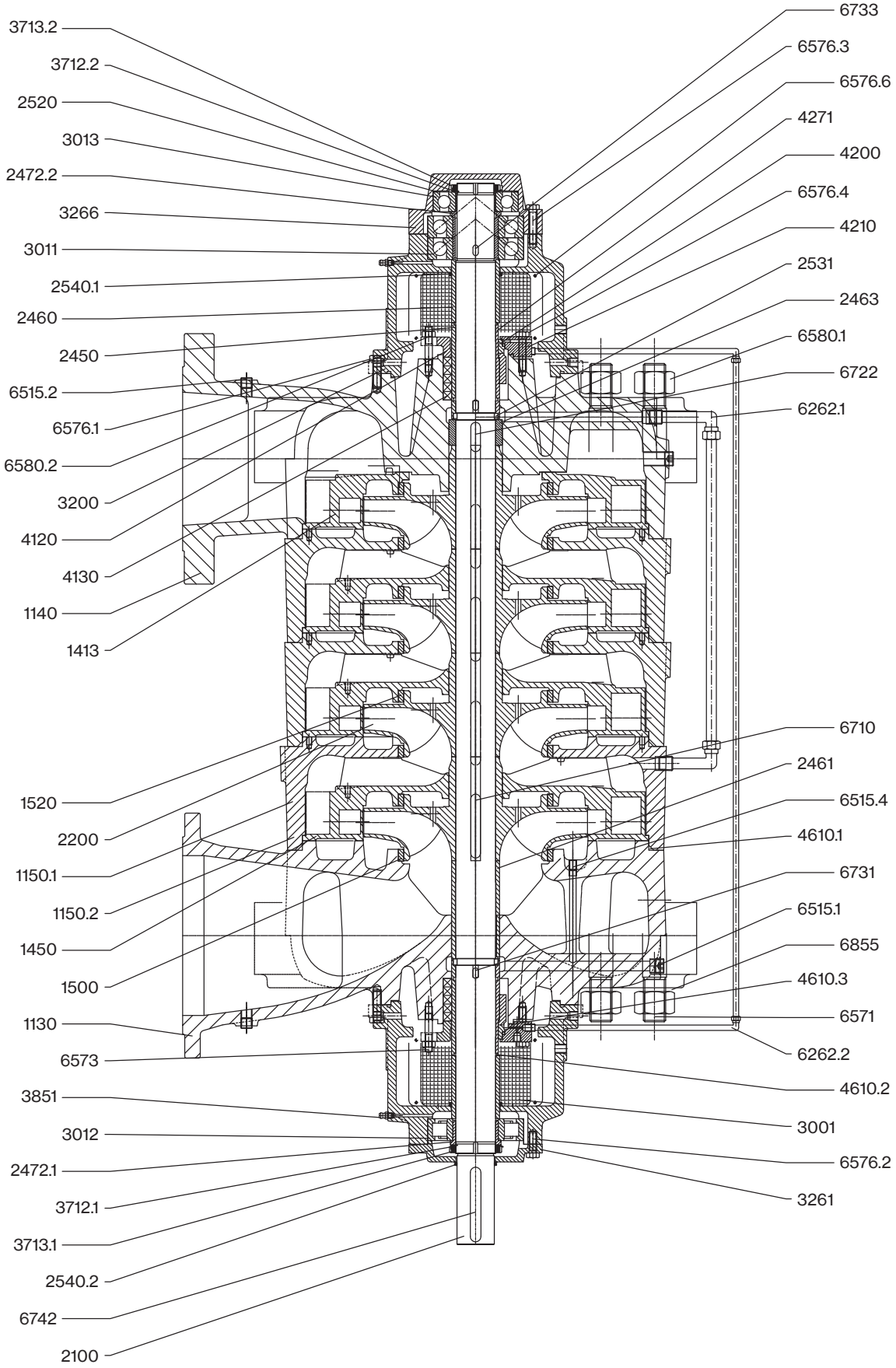

MARLY

HP 250 grease lubrication

Ref.	Part Description	Recomanded spare part	Q.ty
1130	Suction casing		
1140	Discharge casing		
1150.1	Stage casing		
1150.2	Stage casing		
1413	Diffuser last stage		
1450	Diffuser		
1500	KIt Wear rings impellers	Yes	1
1660	Discharge casing bush	Yes	1
2100	Shaft		
2200	Impeller		
2450	Shaft sleeve		
2460	KIt Spacer and Bear. sleeves	Yes	1
2520	Shoulder ring	Yes	1
2531	Split ring	Yes	1
2540.1	KIt Trower	Yes	1
3001	Safety net		
3011	Kit Ball and Roller bearings	Yes	1
3200	Bearing housing		
3261	Bearing cover drive size		
3266	Bearing end cover		
3712.1	Kit nuts	Yes	1
3851	Grease cup		
4120	Gland		
4130	Gland packing	Yes	1
4200	Mechanical seal	Yes	1
4210	Flange mechanical seal		
4271	Shaft sleeve m. seal		
4610.1	Kit O-Rings	Yes	1
6262.1	Balance Pressure Pipe		
6262.2	Mechanical seal pipe		
6515.1	Kit Plugs		
6571	Tie bolt		
6573	Gland tie		
6576.1-6	Kit Screws		
6580.1	Kit Nuts		
6710	Kit Keys	Yes	1
6855	Washer		

HPMA 25-32-50-80-100-125-150 oil lubrication

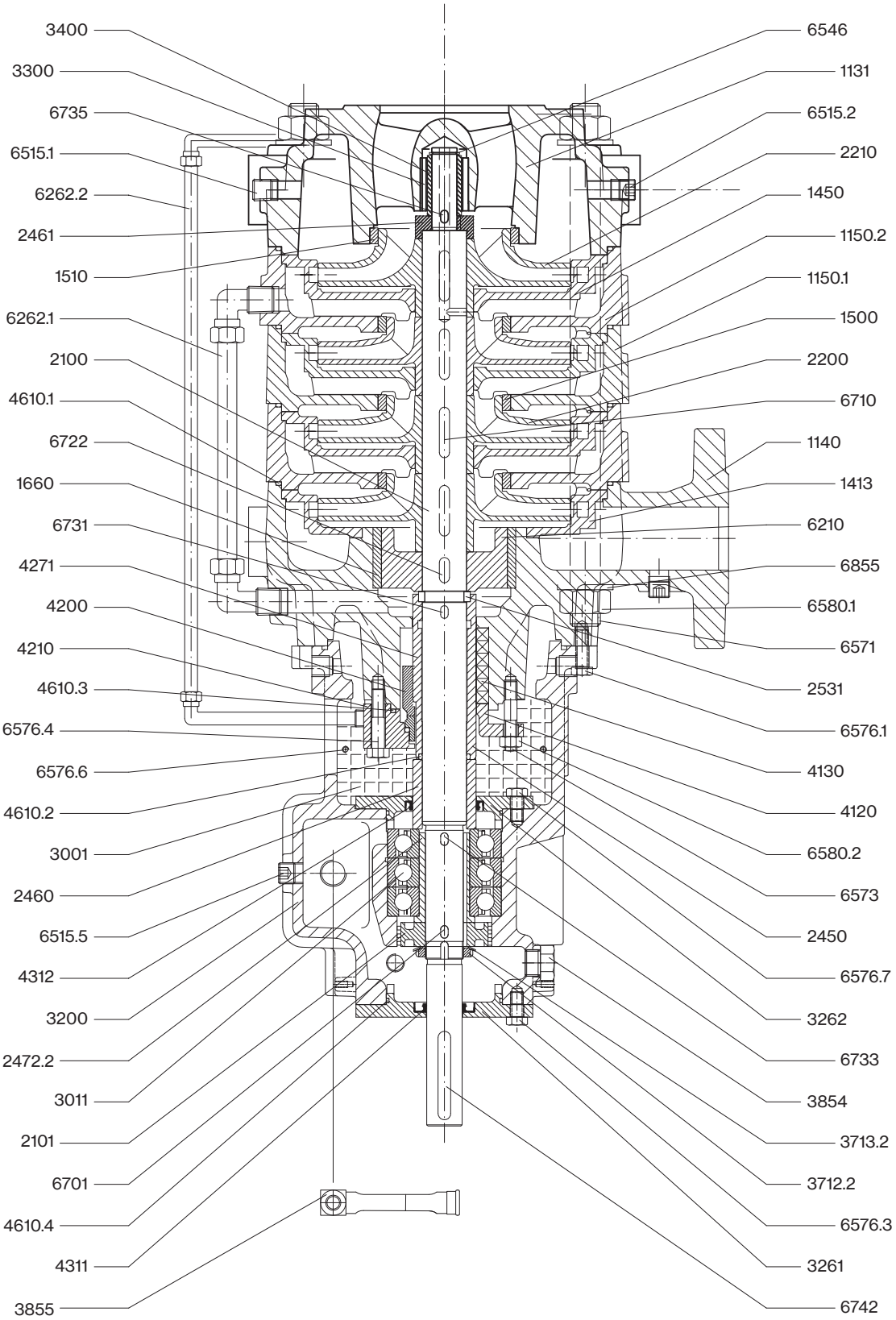

MARLY

HPMA 125-150 oil lubrication

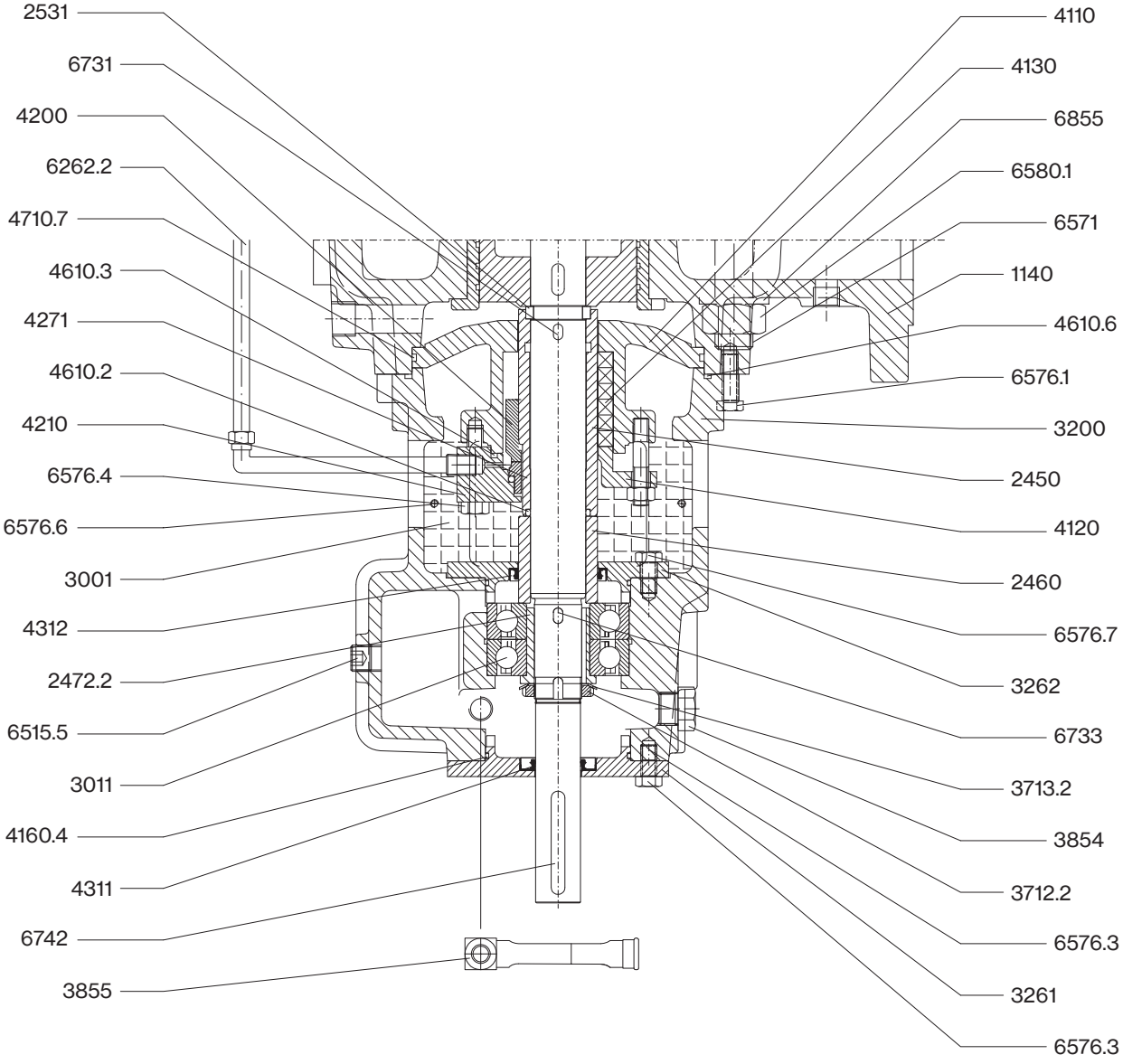

HPMA 25-32-50-80-100-125-150 oil lubrication

Ref.	Part Description	Recomanded spare part	Q.ty
1131	Suction casing for axial execution		
1140	Discharge casing		
1150.1	Stage casing		
1150.2	Stage casing		
1413	Diffuser last stage		
1530	KIT diffusers Wear rings	Yes	1
1450	Diffuser		
1500/10	KIT Wear ring impeller	Yes	1
1660	Discharge casing bush	Yes	1
2100	Shaft		
2101	Oil circulator		
2200	Impeller		
2210	Impeller suction stage		
2450	Gland packing Shaft sleeve	Yes	1
2460/1	KIT Space sleeves	Yes	1
2472.2	Shaft sleeve bearing	Yes	1
2520	Shoulder ring		
2540.1-2	KT Trowers	Yes	1
2531	Split ring		
3001	Safety net		
3011/13	KIT Radial ball bearings	Yes	1
3200	Bearing housing		
3261	Bearing cover drive size		
3262	Bearing cover pump size		
3300	Bearing Bushing	Yes	1
3400	Shaft-Sleeve Bearings	Yes	1
3712.2	Bearings Lockwasher		
3713.2	Washer	Yes	1
3851	Greaser		
3854	Oil plug		
3855	Costant oil lever		
4110	Seal Housing		
4120	Gland packing		
4130	Gland	Yes	1
4200	Mechanical seal	Yes	1
4210	Flange mechanical seal		
4271	Shaft sleeve mechanical seal	Yes	1
4311-2	KIT Radial shaft seal	Yes	1
4610.1-7	KIT O-Ring	Yes	1
6210	Balance Drum		
6262.1	Balance drum pipe		
6262.2	Mechanical seal pipe		
6515.1-5	KIT Plugs	Yes	1
6546	Seeger	Yes	1
6571	Tie rods		
6573	Tie bolt		
6576.1-9	KIT screws		
6580.1-2	KIT Nuts		
6701-42	KIT Keys	Yes	1
6855	Washer		

HPM 25-32-50-80-100-125-150 oil lubrication

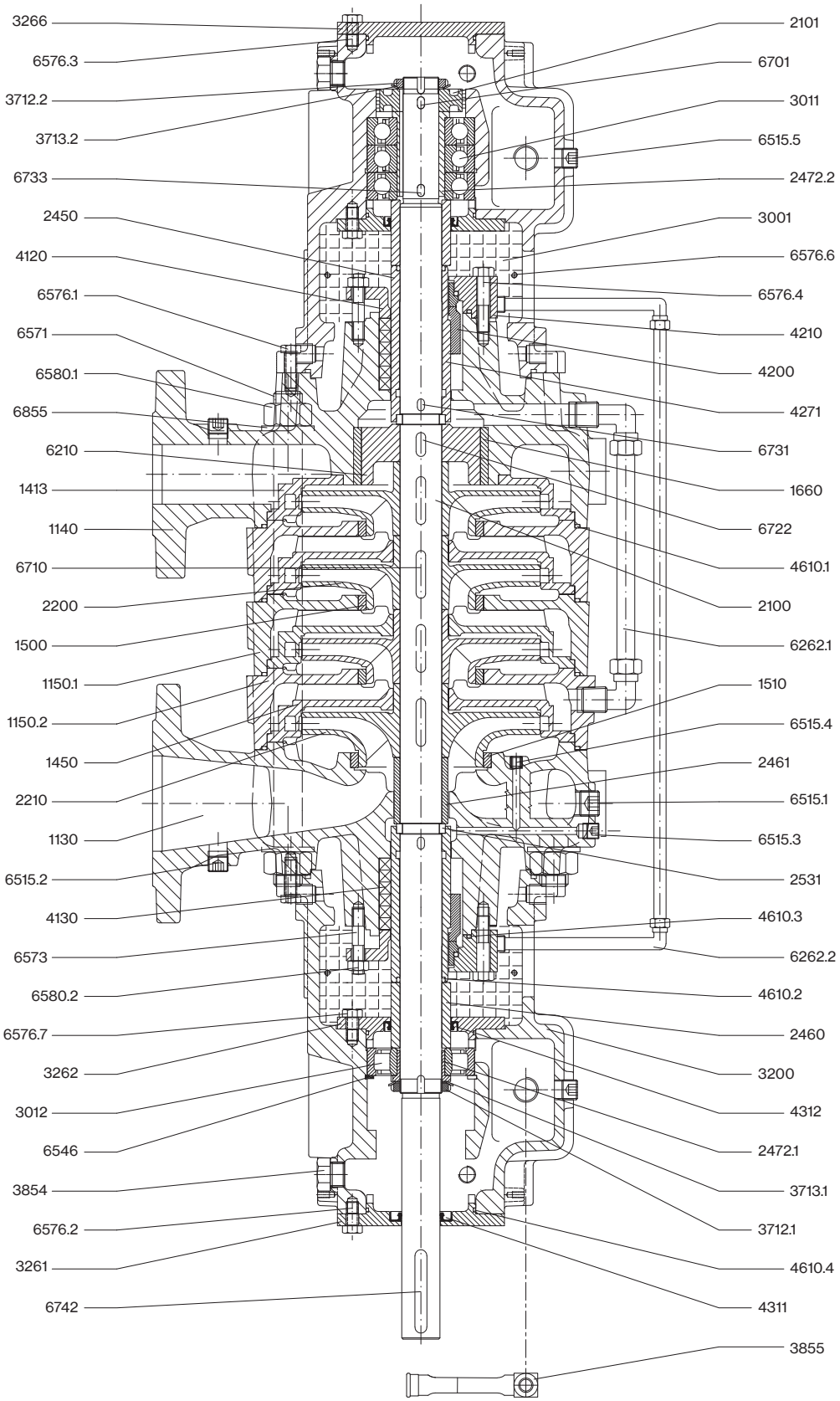

HPM 125-150 oil lubrication

HPM 150
THRUST BEARING SIDE

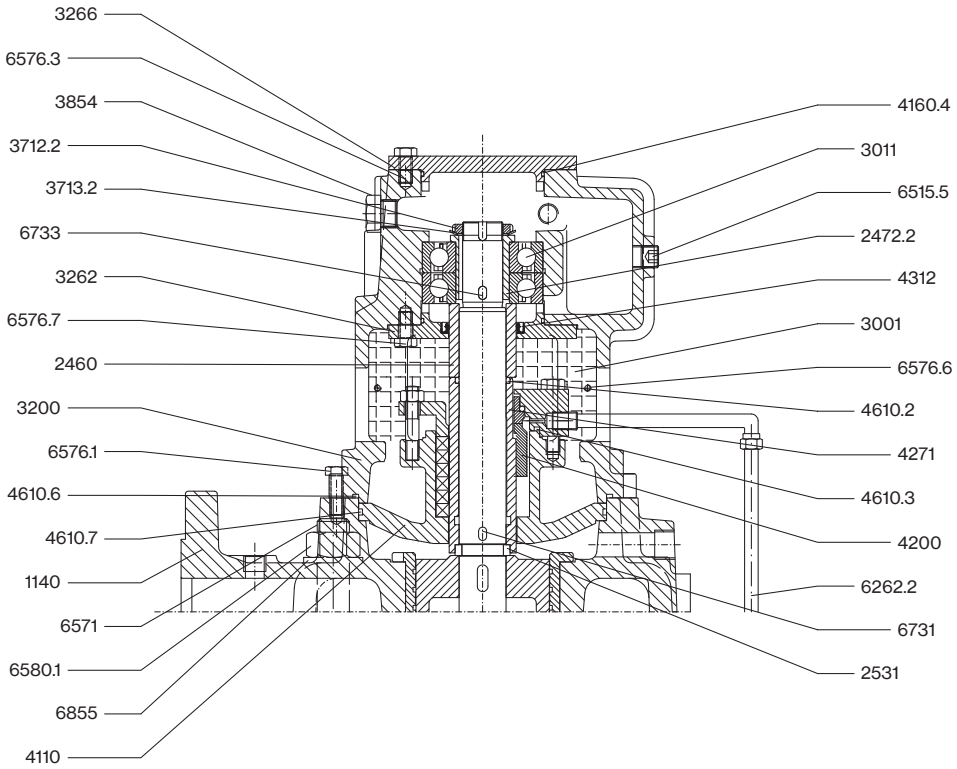

HPM 125 - SUCTION AND PRESSURE SIDE
HPM 150 - NOT THRUST BEARING SIDE

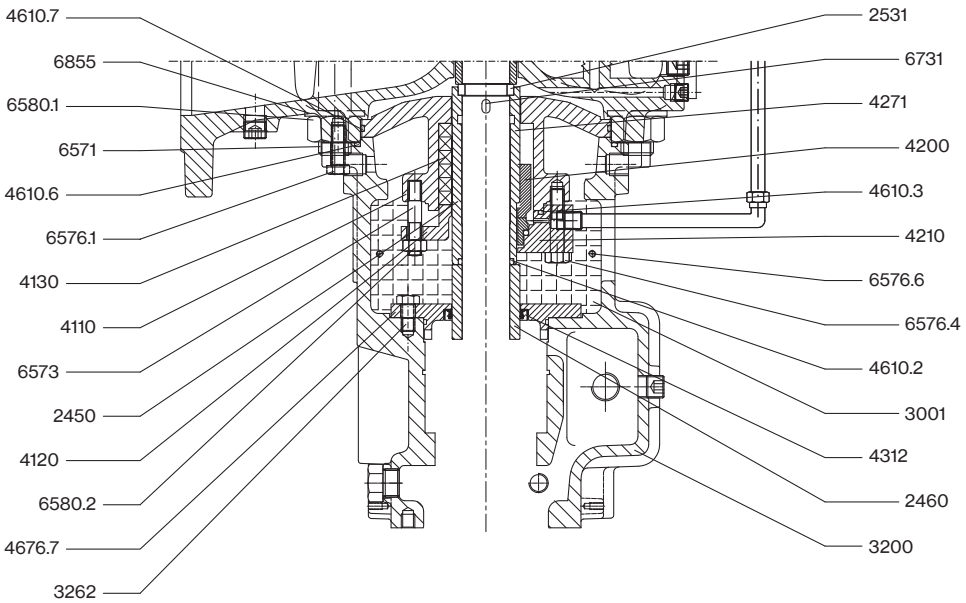

HPM 25-32-50-80-100-125-150 oil lubrication

Ref.	Part Description	Recomanded spare part	Q.ty
1130	Suction casing		
1140	Discharge casing		
1150.1	Stage casing		
1150.2	Stage casing		
1413	Diffuser last stage		
1450	Diffuser		
1500	Kit Wear rings impellers	Yes	1
1660	Discharge casing bush	Yes	1
2100	Shaft		
2101	Oil circulator		
2200	Impeller		
2210	Impeller suction stage		
2450	Gland paking Shaft sleeve	Yes	1
2460-72	Kit Spacers and Bearings sleeves	Yes	1
2531	Split ring		
3001	Safety net		
3011	Kit Ball and Roller bearings	Yes	1
3200	Bearings housing		
3261	Kit Bearings covers		
3712.1	KIt Bearings nuts	Yes	1
3713.1	Kit Lockwashers	Yes	1
3854	Oil filler plug		
3855	Oil lever		
4110	Seal box		
4120	Gland		
4130	Gland paking	Yes	1
4200	Mechanical seal	Yes	1
4210	Flange mechanical seal		
4271	Shaft sleeve m. seal	Yes	1
4311	Kit Shaft seal rings	Yes	1
4610.1-7	Kit O-Rings	Yes	1
6210	Balance Drum		
6262.1	Drum feeding pipe		
6262.2	Mechanical seal pipe		
6515.1	Kit Plugs		
6546	Seeger		
6571	Tie bolt		
6573	Gland tie		
6576.1-7	Kit Screws		
6580.1	KIt Nuts		
6701	Kit Keys	Yes	1
6855	Washer		

HPM 250 oil lubrication

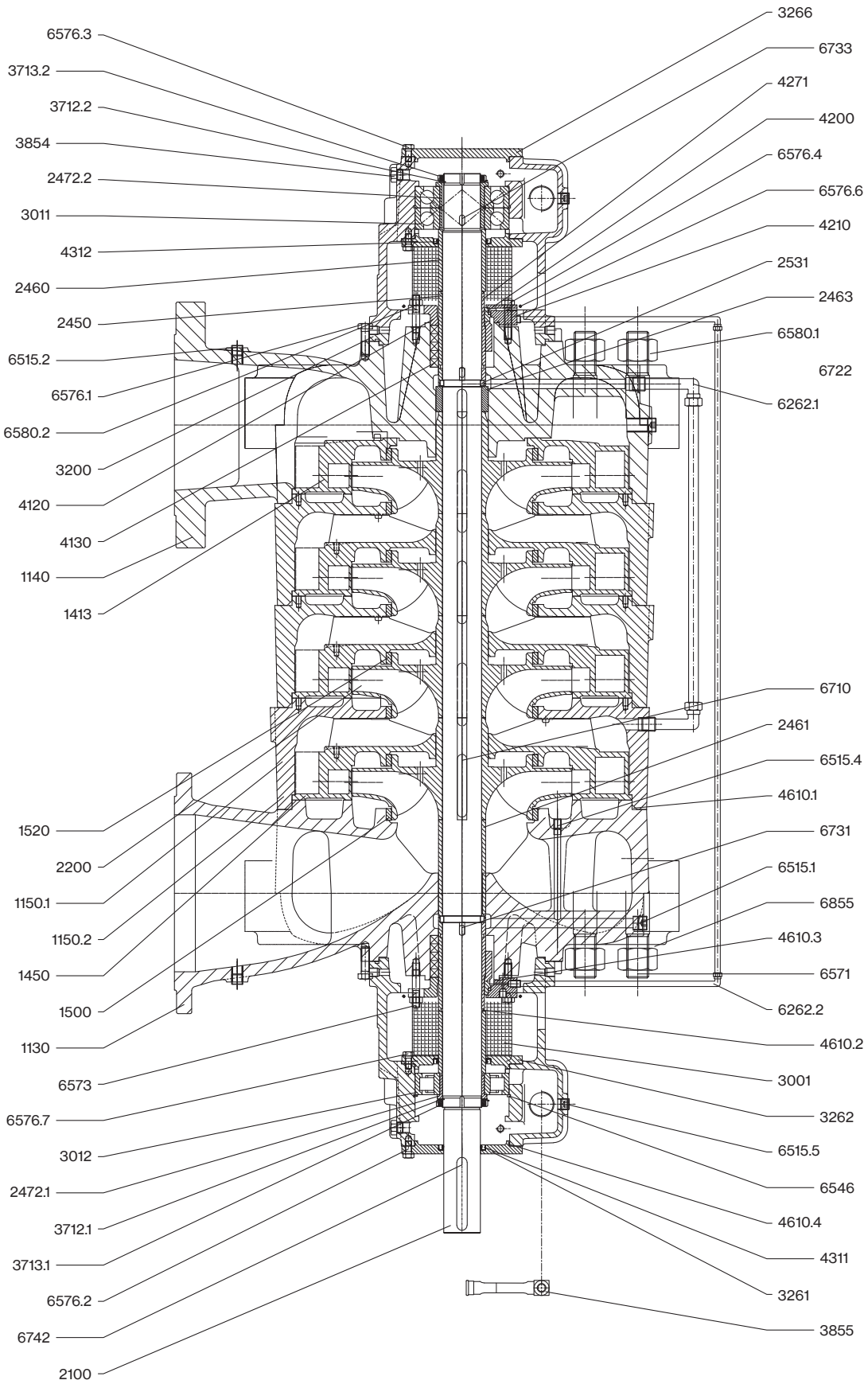

MARLY

HPM 250 oil lubrication

Ref.	Part Description	Recomanded spare part	Q.ty
1130	Suction casing		
1140	Discharge casing		
1150.1	Stage casing		
1150.2	Stage casing		
1413	Diffuser last stage		
1450	Diffuser		
1500	Kit Wear rings impellers	Yes	1
2100	Shaft	Yes	1
2200	Impeller		
2450	Shaft sleeve	Yes	1
2460	Kit Spacers and sleeves	Yes	1
2531	Split Ring	Yes	1
3001	Safety net		
3011	Kit Ball and Roller bearings	Yes	1
3200	Bearing housing		
3261	Kit Bearing covers	Yes	1
3266	Bearing end cover	Yes	1
3712.1	Kit nuts	Yes	1
3854	Oil filler plug		
3855	Oil lever		
4110	Seal box		
4120	Gland		
4130	Gland packing	Yes	1
4200	Mechanical seal	Yes	1
4210	Flange mechanical seal		
4271	Shaft sleeve m. seal	Yes	1
4311	Kit shaft seal Rings	Yes	1
4610.1	Kit O-Rings	Yes	1
6262.1	Balance Pressure Pipe		
6262.2	Mechanical seal pipe		
6515.1	Kit Plugs		
6546	Seeger	Yes	1
6571	Tie bolt		
6573	Gland tie		
6576.1-6	Kit Screws		
6580.1	Kit Nuts		
6710	Kit Keys	Yes	1
6855	Washer	Yes	1

HPR 25-32-50-80-100-125-150 oil lubrication

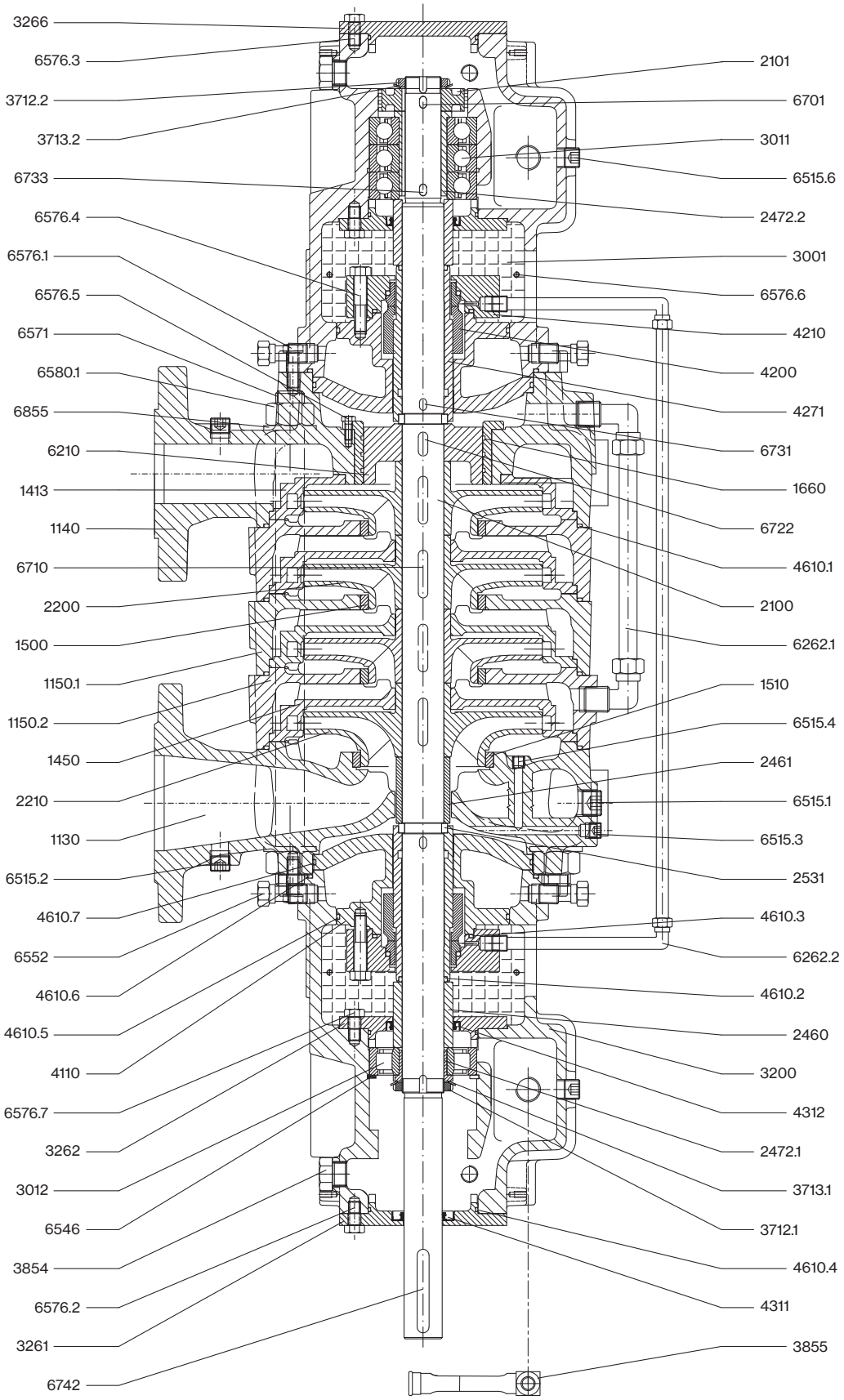

MARLY

HPR 150 oil lubrication

HPR 150
THRUST BEARING SIDE

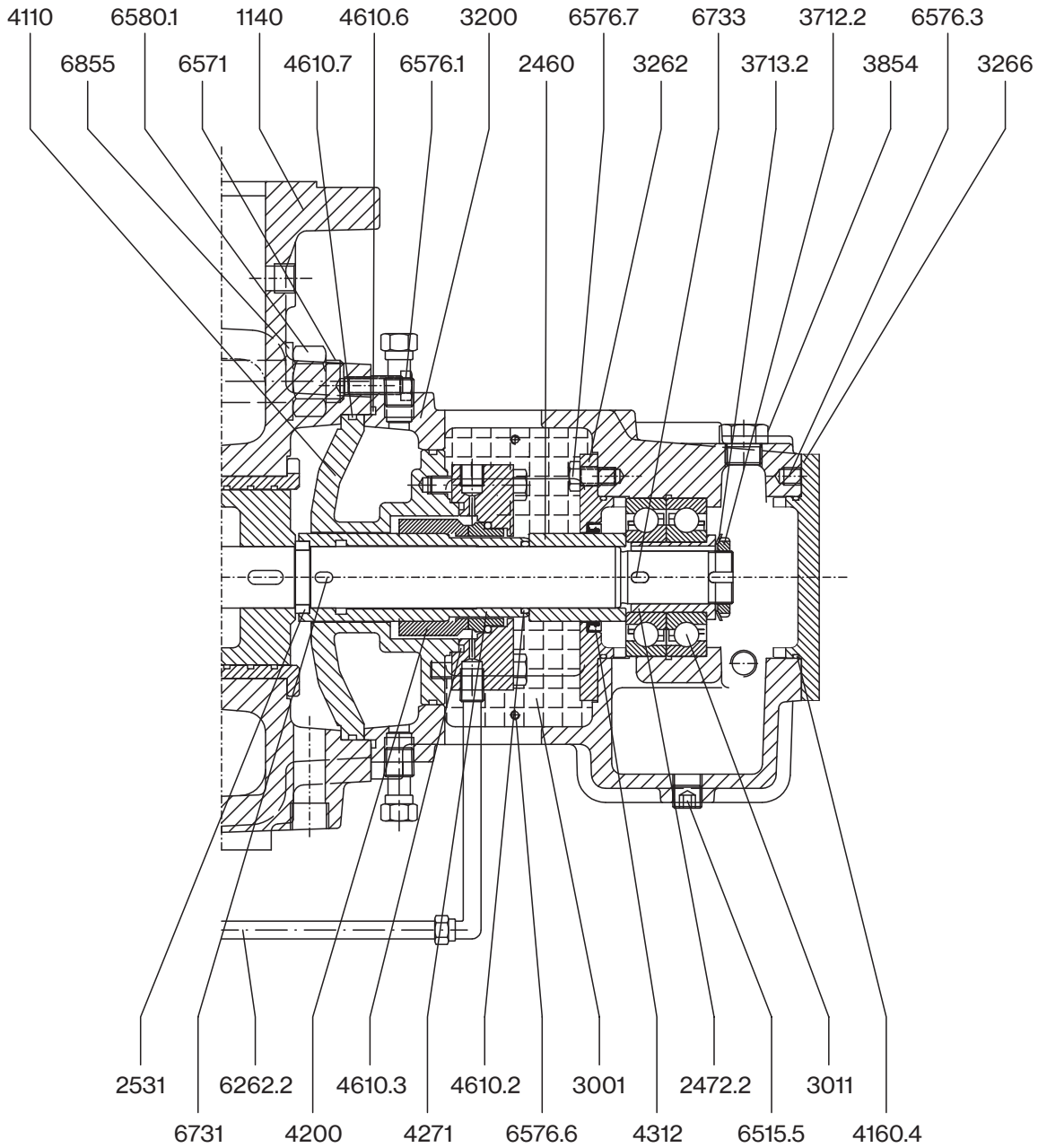

HPR 25-32-50-80-100-125-150 oil lubrication

Ref.	Part Description	Recomanded spare part	Q.ty
1130	Suction casing		
1140	Discharge casing		
1150.1	Stage casing		
1150.2	Stage casing		
1413	Diffuser last stage		
1450	Diffuser		
1500	Kit Wear rings impellers	Yes	1
1660	Discharge casing bush	Yes	1
2100	Shaft		
2101	Oil circulator		
2200	Impeller		
2210	Impeller suction stage		
2460-72	Kit Spacers and Bearings sleeves	Yes	1
2531	Split ring	Yes	1
3001	Safety net		
3011	Kit Radial Ball and Roller bearings	Yes	1
3200	Bearing housing		
3261	Kit Bearing covers		
3712.1	Kit Bearing nuts		
3713.1	Kit Lockwasher	Yes	1
3854	Oil liller plug		
3855	Oil lever		
4110	Seal housing		
4200	Mechanical seal	Yes	1
4210	Flange mechanical seal		
4271	Kit Shaft seal Rings	Yes	1
4311	Radial shaft seal	Yes	1
4610.1-7	Kit O-Rings	Yes	1
6210	Balance disc		
6262.1	Drum feeding pipe		
6262.2	Mechanical seal pipe		
6515.1	Kit Plugs		
6546	Seeger		
6571	Tie bolt		
6573	Gland tie		
6576.1-7	Kit Screws		
6580.1	Kit Nuts		
6701	Kit Keys	Yes	1
6855	Washer		

HV 25-32-50-80-100-250 grease lubrication

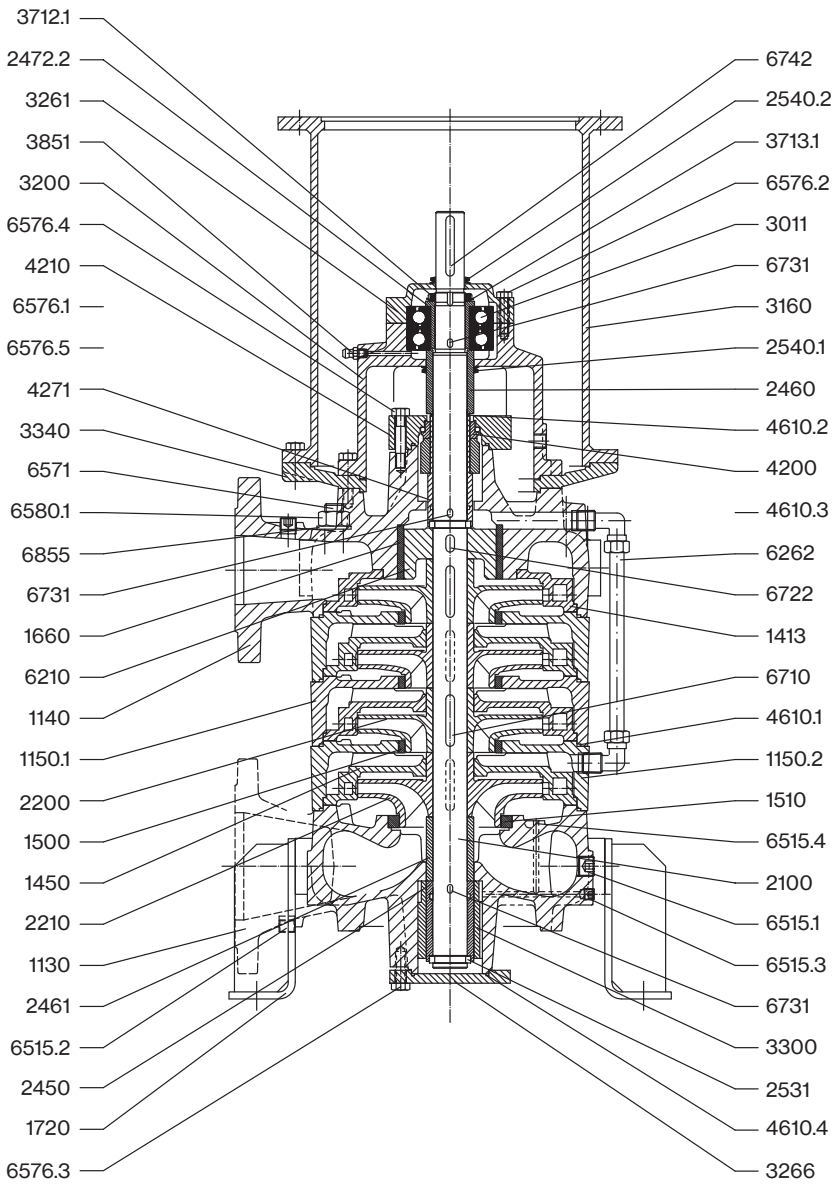

HV 125-150 grease lubrication

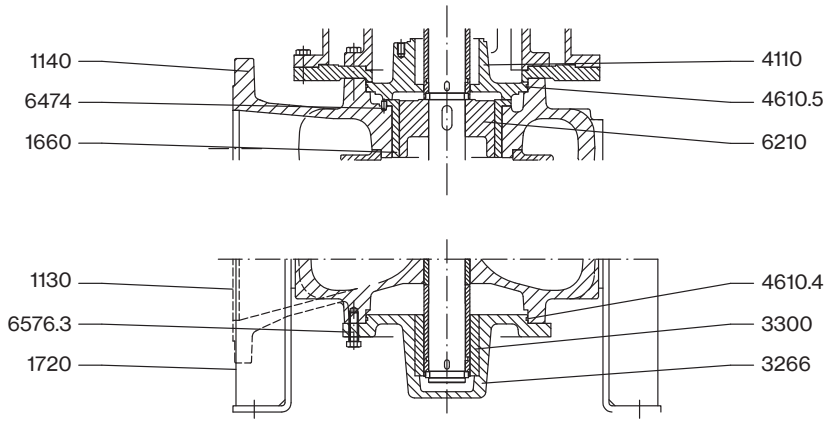

HV 25-32-50-80-100-125-150-250 grease lubrication

Ref.	Part Description	Recomanded spare part	Q.ty
1130	Suction casing		
1140	Discharge casing		
1150.1	Stage casing		
1150.2	Stage casing		
1413	Diffuser last stage		
1450	Diffuser		
1500	Kit Wear rings impeller	Yes	1
1660	Discharge casing bush	Yes	1
1720	Pump foot		
2100	Shaft		
2200	Impeller		
2210	Impeller suction stage		
2520	Shoulder ring	Yes	1
2450	Space sleeve	Yes	1
2460	Kit Space sleeve	Yes	1
2472.1	Kit Shaft sleeve bearing	Yes	1
2531	Split ring		
2540.1	Kit Trower	Yes	1
3011	Kit Ball bearings	Yes	1
3160	Motor Braket		
3200	Bearing housing		
3261	Bearing cover drive size		
3266	Bearing end cover		
3300	Bearing bush		
3340	Driving plate		
3712.1	Kit Bearing nut	Yes	1
3851	Grease cup		
4110	Seal box		
4200	Mechanical seal	Yes	1
4210	Flange mechanical seal		
4271	Shaft sleeve m. seal	Yes	1
4610.1	Kit O-Rings	Yes	1
6210	Balance disc		
6262.1	Drum feeding pipe		
6474	Pin	Yes	1
6515.1	Kit Plugs		
6571	Tie bolt		
6576.1-9	Kit Screw		
6580.1	Nut		
6710	Kit Keys	Yes	1
6855	Washer		

AVAILABLE PUMP FLANGE POSITIONS

Direction of flanges horizontal pumps

P: delivery port
A: suction port

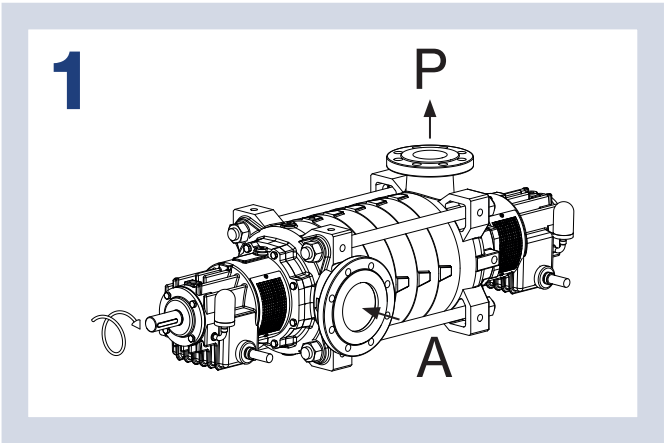

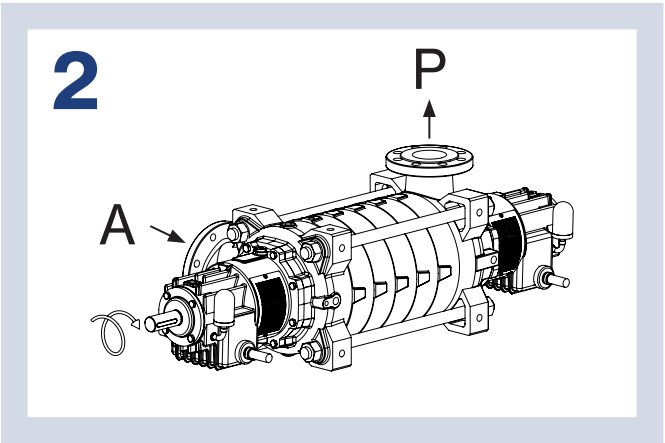

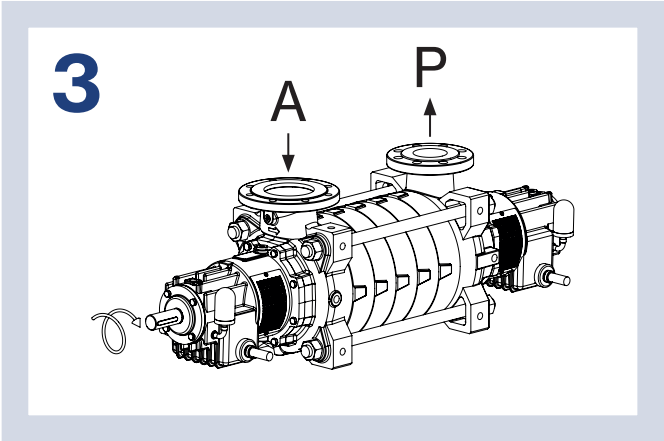

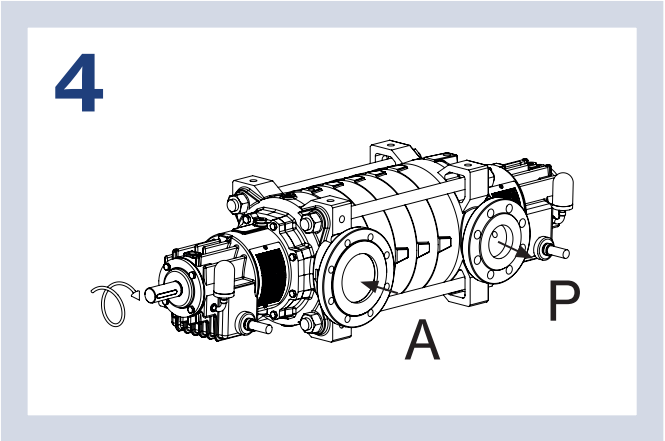

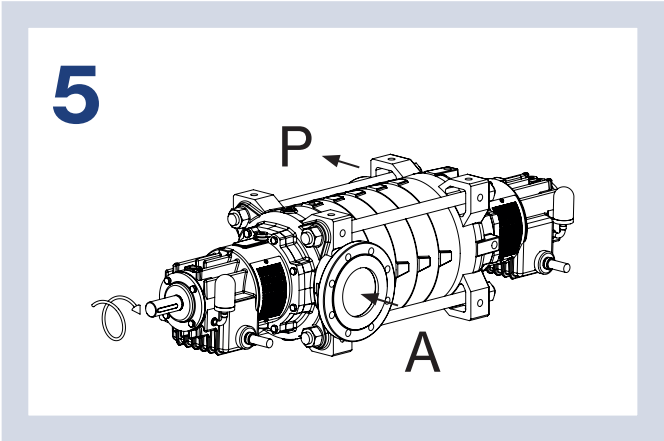

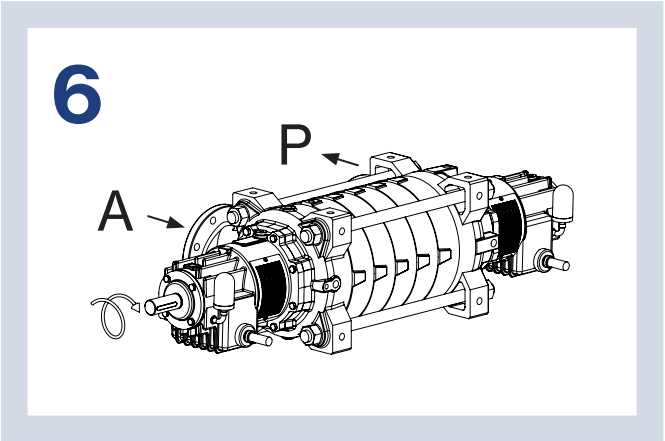

7

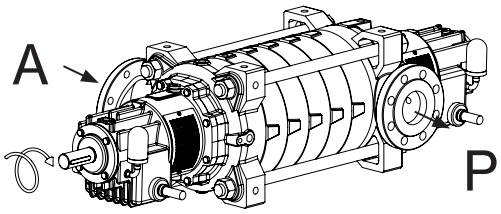

8

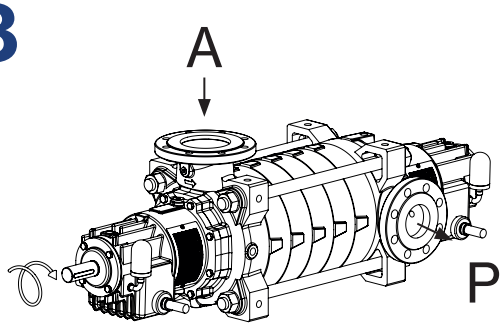

9

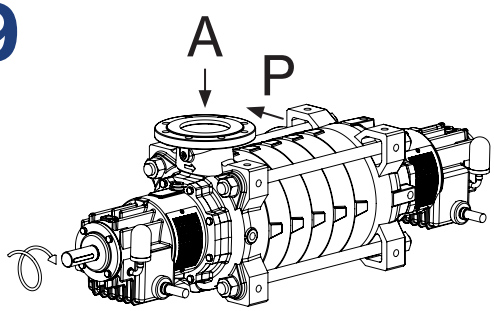

10

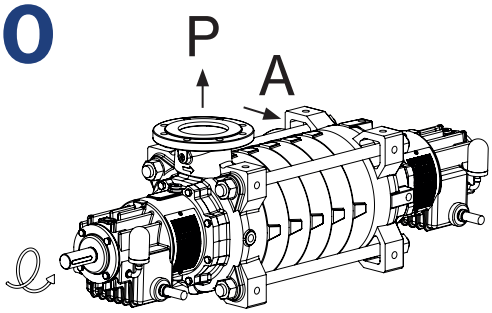

11

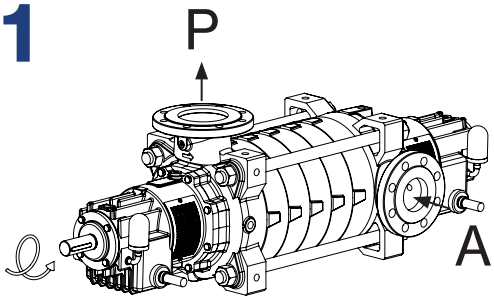

12

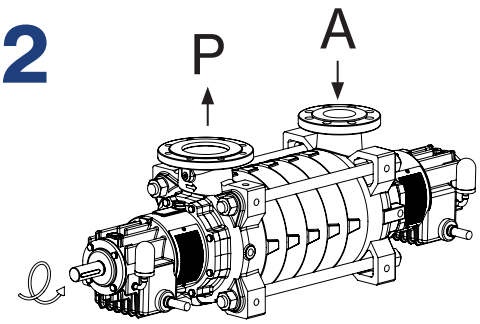

DIRECTION OF FLANGES HORIZONTAL PUMPS

13

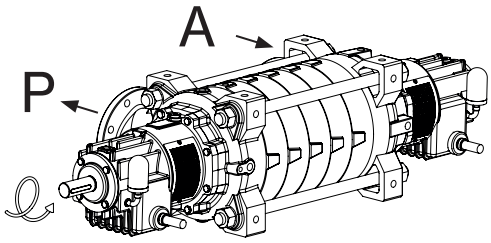

14

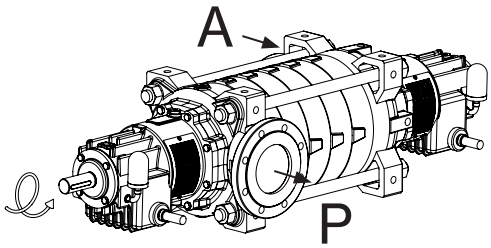

15

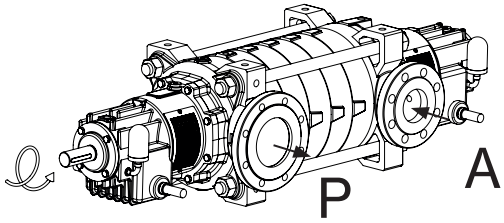

16

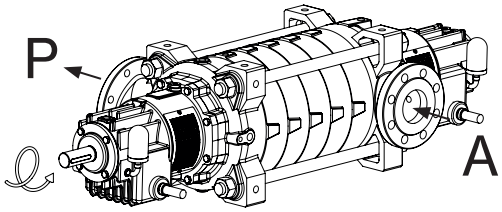

17

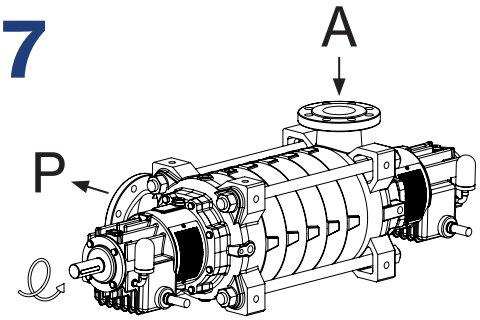

18

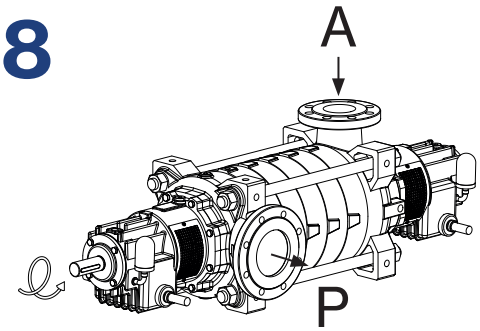

Direction of nozzles vertical pumps

P: delivery port
A: suction port

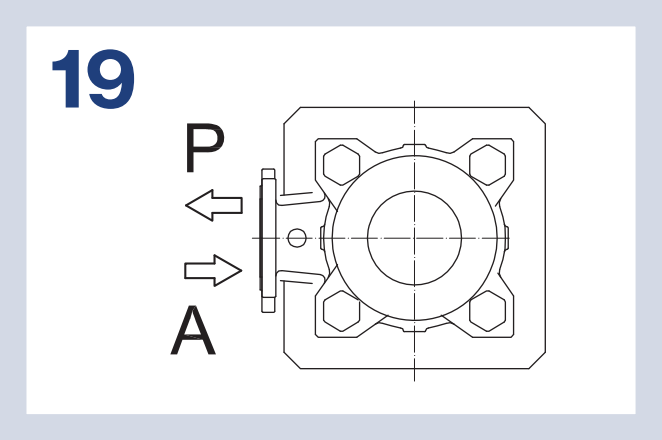

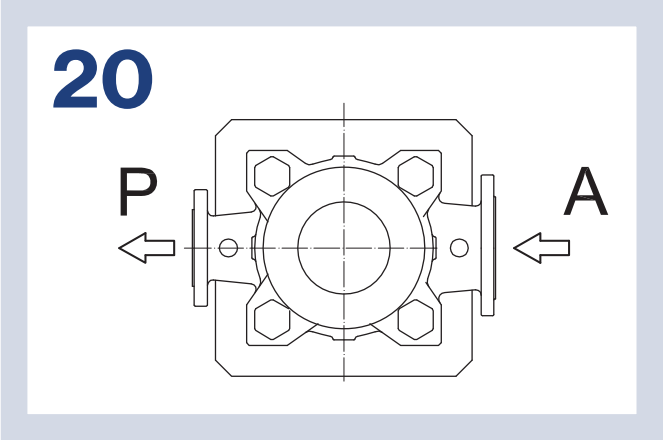

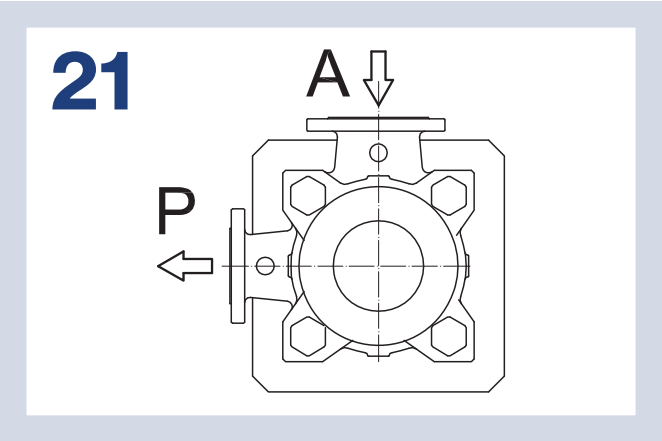

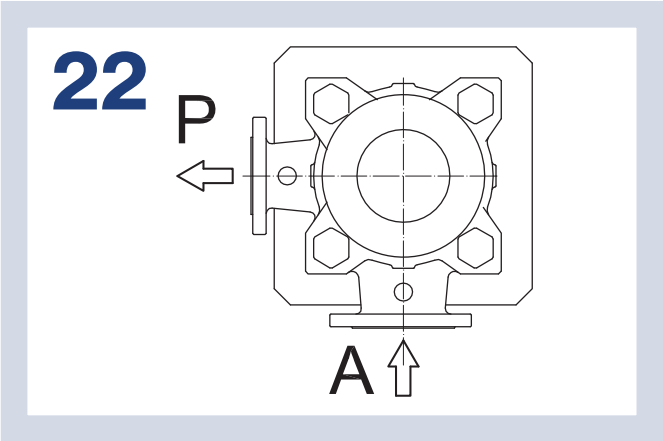

Forces and torques

to be applied on the flanges in accordance to API 610 8th ed.

FLANGES		FORCES				TORQUES			
		daN				daN x m			
		Fx	Fy	Fz	Fr	Mx	My	Mz	Mr
SUCTION	Dia.nom. 2”	89	71	58	128	46	23	35	62
	Dia.nom. 3”	133	107	89	193	95	47	72	128
	Dia.nom. 4”	178	142	116	256	133	68	100	180
	Dia.nom. 5”	244	190	330	344	175	90	128	256
	Dia.nom. 6”	311	249	205	448	230	118	176	313
	Dia.nom. 8”	489	378	311	692	593	176	258	471
	Dia.nom. 10”	667	534	445	963	502	244	380	675
	Dia.nom. 12”	800	667	534	1170	610	298	461	821
DELIVERY	Dia.nom. 2”	71	58	89	128	46	23	35	62
	Dia.nom. 3”	107	89	133	193	95	47	72	128
	Dia.nom. 4”	142	116	178	256	133	68	100	180
	Dia.nom. 5”	165	156	244	344	175	90	128	256
	Dia.nom. 6”	249	205	311	448	230	118	176	313
	Dia.nom. 8”	378	311	489	692	353	176	258	471
	Dia.nom. 10”	534	445	667	963	502	244	380	675

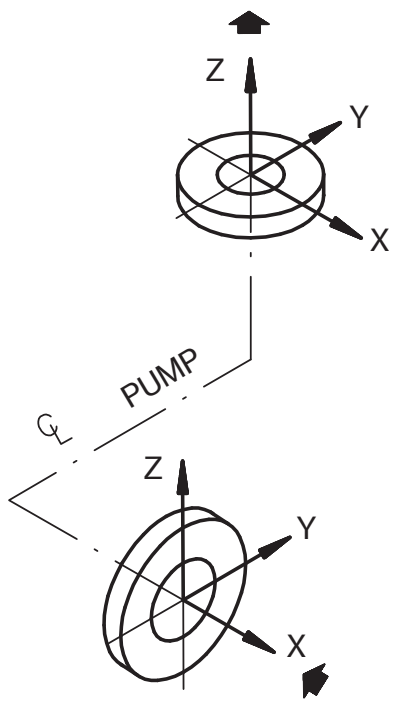

The pump body can stands the double of the torque and forces values above listed for the two flanges, plus the internal pump pressure, without cousing deformations which could effect the pump funcioning and sealing.

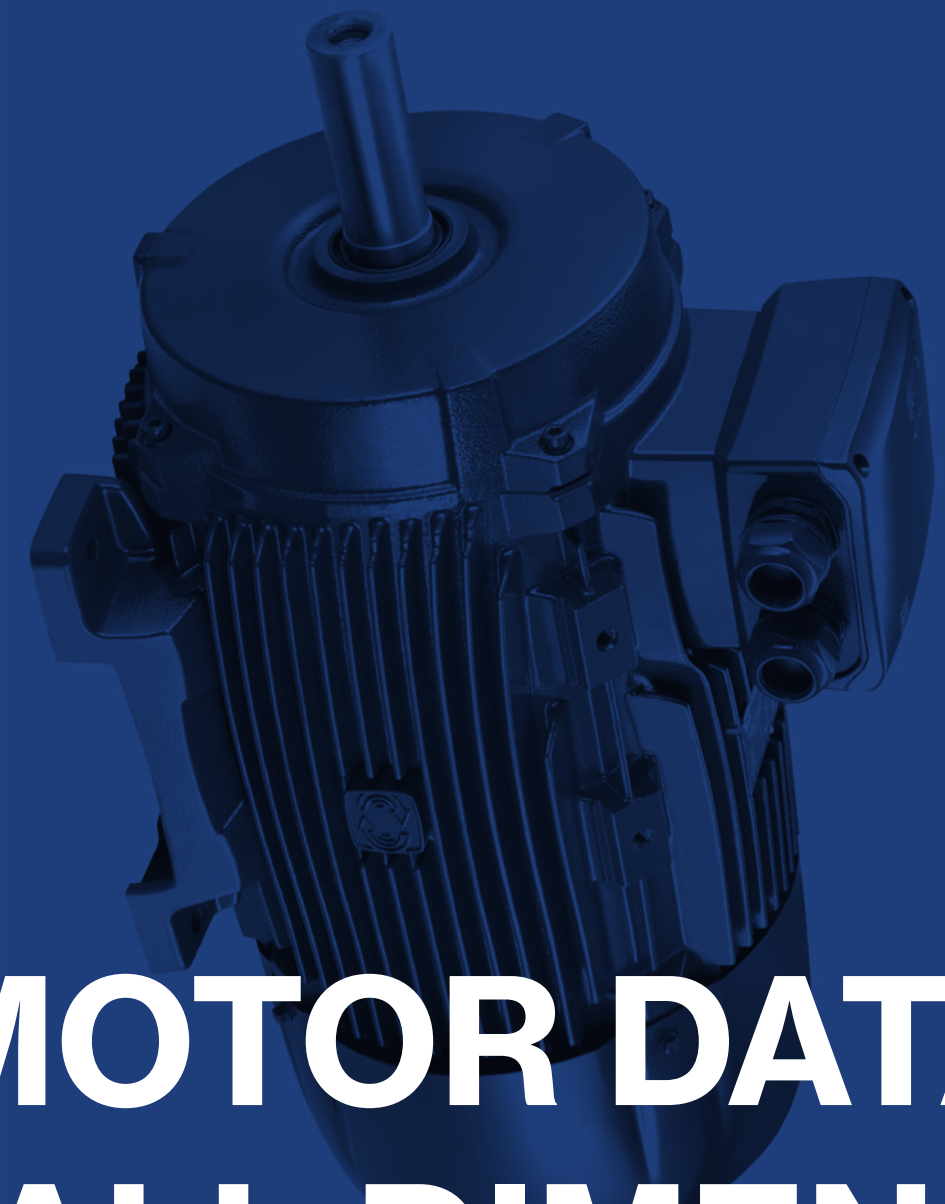

MOTOR DATA AND OVERALL DIMENSIONS

TYPE	kW	HP	rpm	In (A)	Is (A)	Is In	Cn (Nm)	Cs (Nm)	Cs Cn	Cmax (Nm)	Cmax Cn
80A-2	0,75	1	2892	1,74	11,84	6,8	2,48	8,60	3,5	9,18	3,7
80B-2	1,1	1,5	2885	2,26	16,74	7,4	3,64	10,90	3,0	12,74	3,5
90S-2	1,5	2	2902	3,26	25,07	7,7	4,93	19,12	3,9	18,74	3,8
90L-2	2,2	3	2918	5,02	38,59	7,7	7,35	30,97	4,2	30,44	4,1
100L-2	3	4	2903	6,09	48,24	7,9	9,87	35,19	3,6	40,74	4,1
112M-2	4	5,5	2943	7,56	74,38	9,8	12,97	45,92	3,5	61,86	4,8
132SA-2	5,5	7,5	2940	10,14	70,59	7,0	17,87	37,70	2,1	35,79	2,0
132SB-2	7,5	10	2925	13,35	95,00	7,1	24,49	53,50	2,2	78,50	3,2
160MA-2	11	15	2937	19,72	123,05	6,2	35,77	73,32	2,1	100,15	2,8
160MB-2	15	20	2938	26,29	150,23	5,7	48,76	95,08	2,0	121,89	2,5
160L-2	18,5	25	2942	32,15	192,92	6,0	60,05	124,31	2,1	179,00	2,1
180M-2	22	30	2950	37,53	304,03	8,1	71,22	163,81	2,3	220,80	3,1
200LA-2	30	40	2940	51,51	386,34	7,5	97,45	224,13	2,3	223,37	2,3
200LB-2	37	50	2960	63,26	474,46	7,5	119,38	274,56	2,3	275,49	2,3
225M-2	45	60	2960	76,69	582,87	7,6	145,19	333,93	2,3	332,80	2,3
250M-2	55	75	2970	94,39	707,92	7,5	176,85	406,76	2,3	406,76	2,3
280S-2	75	100	2970	125,82	868,14	6,9	241,16	530,56	2,2	554,67	2,3
280M-2	90	125	2970	150,67	1069,73	7,1	289,39	636,67	2,2	665,61	2,3
315S-2	110	150	2970	183,76	1304,72	7,1	353,70	707,41	2,0	778,15	2,2
315MA-2	132	180	2970	220,06	1562,41	7,1	424,44	848,89	2,0	933,78	2,2
315LA-2	160	215	2970	263,53	1871,07	7,1	514,48	1028,96	2,0	1131,85	2,2
315LB-2	200	270	2970	328,73	2333,99	7,1	643,10	1286,20	2,0	1414,81	2,2
355M-2	250	335	2980	410,91	2917,49	7,1	801,17	1602,35	2,0	1762,58	2,2
355L-2	315	423	2980	517,75	3676,03	7,1	1009,48	2018,96	2,0	2220,86	2,2

TYPE	η%				Fatt. pot. cos φ			ΔT (°C)	LwA (dB)	J Kgm2	Kg
	100%	IE	75%	50%	100%	75%	50%				
80A-2	80,9	IE3	79,6	76,4	0,770	0,700	0,566	35	65	0,00158	17
80B-2	84,5	IE3	84,7	82,8	0,830	0,770	0,652	41	65	0,00185	18
90S-2	85,3	IE3	83,4	81,3	0,786	0,726	0,582	43	71	0,00383	23
90L-2	86,2	IE3	87,0	84,9	0,730	0,675	0,498	48	71	0,00726	26
100L-2	87,1	IE3	87,3	84,9	0,812	0,766	0,618	49	75	0,01439	35
112M-2	89,6	IE3	89,8	88,9	0,856	0,805	0,665	44	77	0,01663	43
132SA-2	91,0	IE3	89,7	87,4	0,860	0,840	0,761	48	78	0,03300	44,8
132SB-2	91,6	IE3	92,4	92,9	0,885	0,850	0,760	60	78	0,03960	73
160MA-2	91,4	IE3	91,2	89,7	0,881	0,864	0,812	49	81	0,04976	120
160MB-2	92,0	IE3	92,6	91,8	0,895	0,877	0,841	61	81	0,06587	132
160L-2	93,0	IE3	93,7	93,0	0,893	0,875	0,827	58	81	0,07260	150
180M-2	94,0	IE3	93,9	93,0	0,900	0,880	0,870	41	83	0,09900	205
200LA-2	93,4	IE3	94,4	90,7	0,900	0,881	0,820	65	84	0,16368	250
200LB-2	93,8	IE3	93,6	90,2	0,900	0,887	0,840	65	84	0,18348	270
225M-2	94,1	IE3	93,9	90,7	0,900	0,878	0,816	65	86	0,30756	315
250M-2	94,5	IE3	92,6	88,5	0,890	0,872	0,825	65	89	0,41184	420
280S-2	95,6	IE4	93,7	89,5	0,900	0,896	0,875	55	91	0,76428	550,8
280M-2	95,8	IE4	95,7	93,7	0,900	0,894	0,857	65	91	0,89100	625
315S-2	96,0	IE4	95,9	93,9	0,900	0,894	0,857	65	92	1,55760	968
315MA-2	96,2	IE4	96,2	94,2	0,900	0,894	0,857	65	92	2,40240	1100
315LA-2	96,3	IE4	96,2	94,2	0,910	0,904	0,867	65	92	2,74560	1160,5
315LB-2	96,5	IE4	96,5	94,5	0,910	0,904	0,867	65	92	3,14160	1221
355M-2	96,5	IE4	96,5	94,5	0,910	0,904	0,867	65	100	3,96000	2090
355L-2	96,5	IE4	96,5	94,5	0,910	0,904	0,867	65	100	4,62000	2530

TYPE	kW	HP	rpm	In (A)	Is (A)	Is In	Cn (Nm)	Cs (Nm)	Cs Cn	Cmax (Nm)	Cmax Cn
80B-4	0,75	1	1426	1,87	11,24	6,0	5,01	15,52	3,1	15,41	3,1
90S-4	1,1	1,5	1436	2,61	16,60	6,4	7,36	24,26	3,3	24,70	3,4
90L-4	1,5	2	1427	3,59	24,34	6,8	10,03	41,06	4,1	38,49	3,8
100LA-4	2,2	3	1438	4,77	33,83	7,1	14,74	52,18	3,5	54,71	3,7
100LB-4	3	4	1447	6,48	49,52	7,6	19,76	69,03	3,5	77,85	3,9
112M-4	4	5,5	1460	8,79	62,51	7,1	26,17	83,57	3,2	108,56	4,1
132S-4	5,5	7,5	1454	10,64	68,01	6,4	36,12	75,86	2,1	101,15	2,8
132M-4	7,5	10	1460	14,39	94,37	6,6	49,06	91,80	1,9	132,46	2,7
160M-4	11	15	1468	20,76	121,31	5,8	71,56	121,50	1,7	193,21	2,7
160L-4	15	20	1460	28,19	140,97	5,0	98,12	166,60	1,7	255,10	2,6
180M-4	18,5	25	1477	33,53	206,45	6,2	120,94	202,50	1,7	384,23	3,2
180L-4	22	30	1470	39,62	261,96	6,6	142,93	235,19	1,6	401,22	2,8
200L-4	30	40	1480	53,48	385,07	7,2	193,58	425,88	2,2	445,24	2,3
225S-4	37	50	1480	65,37	490,30	7,5	238,75	525,25	2,2	549,13	2,3
225M-4	45	60	1480	77,39	588,17	7,6	290,37	638,82	2,2	667,85	2,3
250M-4	55	75	1480	93,89	713,58	7,6	354,90	780,78	2,2	816,27	2,3
280S-4	75	100	1480	126,70	874,24	6,9	483,95	1064,70	2,2	1113,09	2,3
280M-4	90	120	1485	153,61	1075,26	7,0	578,79	1273,33	2,2	1331,21	2,3
315S-4	110	150	1480	187,35	1292,74	6,9	709,80	1561,55	2,2	1632,53	2,3
315M-4	132	180	1480	224,59	1549,68	6,9	851,76	1873,86	2,2	1959,04	2,3
315LA-4	160	220	1480	271,67	1874,51	6,9	1032,43	2271,35	2,2	2374,59	2,3
315LB-4	200	270	1480	339,23	2340,72	6,9	1290,54	2839,19	2,2	2968,24	2,3
355M-4	250	335	1490	414,62	2860,88	6,9	1602,35	3525,17	2,2	3685,40	2,3
355L-4	315	423	1490	522,42	3604,71	6,9	2018,96	4441,71	2,2	4643,61	2,3

TYPE	η %				Fatt. pot. cos φ			ΔT (°C)	LwA (dB)	J Kgm2	Kg
	100%	IE	75%	50%	100%	75%	50%				
80B-4	83,1	IE3	82,6	81,6	0,690	0,619	0,531	46	56	0,00277	12
90S-4	84,8	IE3	84,9	79,3	0,723	0,609	0,510	36	61	0,00304	25
90L-4	85,3	IE3	85,1	83,0	0,708	0,592	0,483	41	61	0,00356	30
100LA-4	86,7	IE3	87,8	85,8	0,771	0,663	0,543	41	64	0,00713	36
100LB-4	89,0	IE3	89,4	86,8	0,745	0,648	0,519	46	64	0,00893	40
112M-4	89,1	IE3	89,2	87,2	0,736	0,674	0,505	46	77	0,01663	43
132S-4	89,9	IE3	92,1	92,4	0,830	0,770	0,675	61	71	0,02853	70
132M-4	90,5	IE3	90,8	89,9	0,831	0,790	0,699	46	71	0,03946	56,5
160M-4	91,8	IE3	91,7	90,4	0,833	0,790	0,675	52	73	0,08133	125
160L-4	92,3	IE3	93,1	92,3	0,832	0,780	0,680	61	75	0,12239	150
180M-4	92,6	IE3	92,1	90,2	0,870	0,817	0,724	40	76	0,18531	170,6
180L-4	93,2	IE3	91,7	91,0	0,860	0,832	0,761	59	76	0,21065	189,3
200L-4	93,6	IE3	93,8	92,8	0,865	0,818	0,767	80	79	0,34930	254,8
225S-4	93,9	IE3	92,7	92,0	0,870	0,839	0,776	75	81	0,54128	268,3
225M-4	94,3	IE3	93,3	92,8	0,890	0,872	0,807	80	81	0,62527	353
250M-4	95,0	IE3	94,2	93,5	0,890	0,862	0,800	75	83	0,87991	450
280S-4	96,0	IE4	94,5	92,0	0,890	0,863	0,843	70	86	1,71600	605
280M-4	96,1	IE4	94,4	92,9	0,880	0,872	0,838	65	86	1,96680	700
315S-4	96,3	IE4	94,7	93,2	0,880	0,872	0,838	65	87	4,13160	925
315M-4	96,4	IE4	94,8	93,3	0,880	0,872	0,838	55	87	4,81800	1180
315LA-4	96,6	IE4	95,0	93,5	0,880	0,872	0,838	75	87	5,42784	1160,5
315LB-4	96,7	IE4	95,0	93,4	0,880	0,872	0,838	70	87	6,34920	1240,8
355M-4	96,7	IE4	95,1	93,5	0,900	0,892	0,857	75	94	8,61960	1870
355L-4	96,7	IE4	95,0	93,4	0,900	0,892	0,857	70	94	10,87680	2090

2-4 POLES IE3-IE4

Data at 400V - 50Hz

The following voltages and frequencies are inside the standard power supply of all three-phase motors, under S1 duty service.

		V	
SIZE	Hz	△	⅄
80-112	50 ±5%	230	400
		220	380
		240	415
	60 ±5%	260	440
		220	380
		265	460
		280	480
132-355	50 ±5%	400	690
		380	660
		415	720
	60 ±5%	440	760
		380	660
		460	795
		480	830

All electrical data refer to motors at 50 Hz. These may be connected to 60 Hz, taking into account the multiplier coefficients in the table below.

V 50Hz	V 60Hz	W	In (A)	Cn (Nm)	rpm	Is (A)	CS (Nm)	C max (Nm)
230 ± 10%	**230 ± 5%**	1	1	0,83	1,2	0,83	0,83	0,83
230 ± 10%	**230 ± 10%**	1	0,95	0,83	1,2	0,83	0,83	0,83
230 ± 10%	**240 ± 5%**	1,05	1	0,87	1,2	0,87	0,87	0,87
400 ± 10%	**380 ± 5%**	1	1	0,83	1,2	0,83	0,83	0,83
400 ± 10%	**400 ± 10%**	1	0,95	0,83	1,2	0,83	0,83	0,83
400 ± 10%	**415 ± 10%**	1,05	1	0,87	1,2	0,87	0,87	0,87
400 ± 10%	**440 ± 10%**	1,10	1	0,90	1,2	0,93	0,93	0,93
400 ± 10%	**460 ± 5%**	1,15	1	0,96	1,2	0,96	0,96	0,96
400 ± 10%	**480 ± 5%**	1,20	1	1	1,2	1	1	1

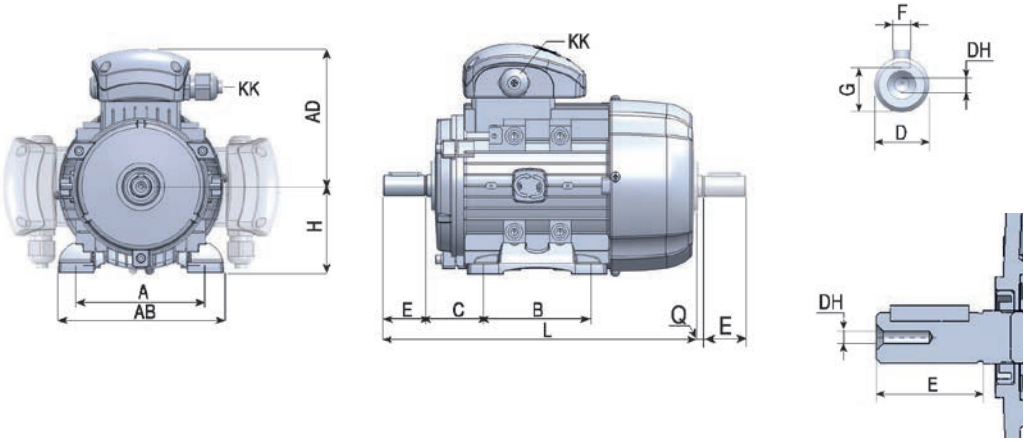

DIMENSIONS (mm)																
TYPE	POLES	AD	H	KK	L	D	DH	E	Q	F	G	B3				
												A	AB	B	C	K
80	2-8	130	80	M20	283	19	M6×16	40	3	6	15,5	125	157	100	50	10
90S	2-8	145	90	M20	330	24	M8×19	50	5	8	20	140	173	100	56	10
90L	2-8	145	90	M20	358	24	M8×19	50	5	8	20	140	173	125	56	10
100	2-8	157	100	M20	393	28	M10×22	60	5	8	24	160	196	140	63	12
112M	2-8	177	112	M25	410	28	M10×22	60	5	8	24	190	227	140	70	12
132S	2-8	197	132	M32	480	38	M12×28	80	5	10	33	216	262	140	89	12
132M	2-8	197	132	M32	516	38	M12×28	80	5	10	33	216	262	178	89	12
160M	2-8	255	160	2×M40	613	42	M16×36	110	5	12	37	254	320	210	108	15
160L	2-8	252	160	2×M40	708	42	M16×36	110	5	12	37	254	320	254	108	15
180M	2-8	270	180	2×M40	730	48	M16×36	110	8	14	42,5	279	355	241	121	15
180L	2-8	270	180	2×M40	780	48	M16×36	110	8	14	42,5	279	355	279	121	15
200L	2-8	303	200	2×M50	771	55	M20×42	110	12	16	49	318	395	305	133	19
225S	2-8	312	225	2×M50	815	60	M20×42	140	12	18	53	356	435	286	149	19
225M	2	312	225	2×M50	820	55	M20×42	110	12	16	49	356	435	286/311	149	19
225M	4-8	312	225	2×M50	850	60	M20×42	140	12	18	53	356	435	286/311	149	19
250M	2	355	250	2×M63	910	60	M20×42	140	12	18	53	406	490	349	168	24
250M	4-8	355	250	2×M63	910	65	M20×42	140	12	18	58	406	490	349	168	24
280S	2	398	280	2×M63	985	65	M20×42	140	12	18	58	457	550	368	190	24
280S	4-8	398	280	2×M63	985	75	M20×42	140	12	20	67,5	457	550	368	190	24
280M	2	398	280	2×M63	1035	65	M20×42	140	12	18	58	457	550	368/419	190	24
280M	4-8	398	280	2×M63	1035	75	M20×42	140	12	20	67,5	457	550	368/419	190	24
315S	2	540	315	2×M63	1160	65	M20×42	140	15	18	58	508	630	406	216	28
315S	4-8	540	315	2×M63	1270	80	M20×42	170	15	22	71	508	630	406	216	28
315M	2	540	315	2×M63	1290	65	M20×42	140	15	18	58	508	630	457	216	28
315M	4-8	540	315	2×M63	1325	80	M20×42	170	15	22	71	508	630	457	216	28
315L	2	540	315	2×M63	1320	65	M20×42	140	15	18	58	508	630	508	216	28
315L	4-8	540	315	2×M63	1350	80	M20×42	170	15	22	71	508	630	508	216	28
355M	2	655	355	2×M63	1500	75	M20×42	140	15	20	67,5	610	730	560/630	254	28
355M	4-8	655	355	2×M63	1530	95	M20×42	170	15	25	86	610	730	560/630	254	28
355L	2	655	355	2×M63	1500	75	M20×42	140	15	20	67,5	610	730	560/630	254	28
355L	4-8	655	355	2×M63	1530	95	M20×42	170	15	25	86	610	730	560/630	254	28

B5

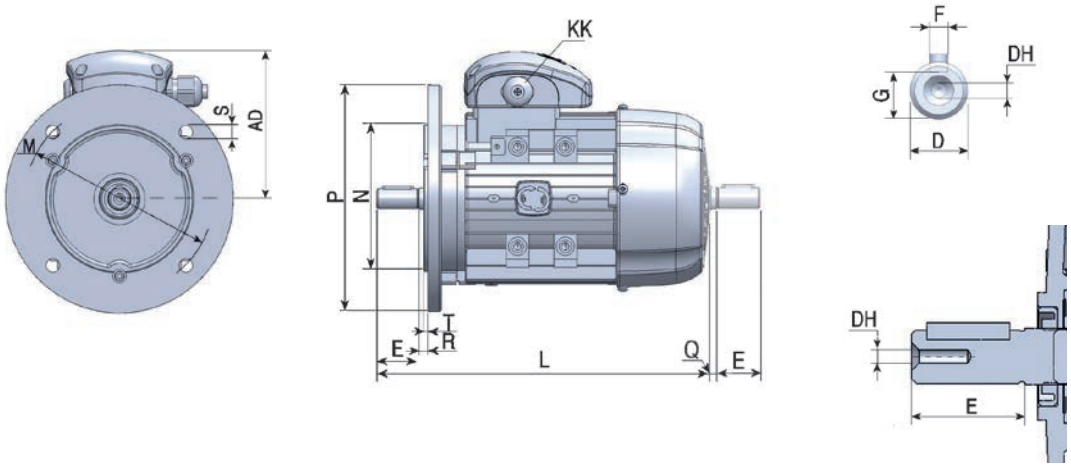

DIMENSIONS (mm)																
TYPE	POLES	AD	H	KK	L	D	DH	E	Q	F	G	B5				
												M	N	P	S	T
80	2-8	130	80	M20	283	19	M6×16	40	3	6	15,5	165	130	200	12×4	3,5
90S	2-8	145	90	M20	330	24	M8×19	50	5	8	20	165	130	200	12×4	3,5
90L	2-8	145	90	M20	358	24	M8×19	50	5	8	20	165	130	200	12×4	3,5
100	2-8	157	100	M20	393	28	M10×22	60	5	8	24	215	180	250	15×4	4
112M	2-8	177	112	M25	410	28	M10×22	60	5	8	24	215	180	250	15×4	4
132S	2-8	197	132	M32	480	38	M12×28	80	5	10	33	265	230	300	15×4	4
132M	2-8	197	132	M32	516	38	M12×28	80	5	10	33	265	230	300	15×4	4
160M	2-8	255	160	2×M40	613	42	M16×36	110	5	12	37	300	250	350	19×4	5
160L	2-8	252	160	2×M40	708	42	M16×36	110	5	12	37	300	250	350	19×4	5
180M	2-8	270	180	2×M40	730	48	M16×36	110	8	14	42,5	300	250	350	19×4	5
180L	2-8	270	180	2×M40	780	48	M16×36	110	8	14	42,5	300	250	350	19×4	5
200L	2-8	303	200	2×M50	771	55	M20×42	110	12	16	49	350	300	400	19×4	5
225S	2-8	312	225	2×M50	815	60	M20×42	140	12	18	53	400	350	450	19×8	5
225M	2	312	225	2×M50	820	55	M20×42	110	12	16	49	400	350	450	19×8	5
225M	4-8	312	225	2×M50	850	60	M20×42	140	12	18	53	400	350	450	19×8	5
250M	2	355	250	2×M63	910	60	M20×42	140	12	18	53	500	450	550	19×8	5
250M	4-8	355	250	2×M63	910	65	M20×42	140	12	18	58	500	450	550	19×8	5
280S	2	398	280	2×M63	985	65	M20×42	140	12	18	58	500	450	550	19×8	5
280S	4-8	398	280	2×M63	985	75	M20×42	140	12	20	67,5	500	450	550	19×8	5
280M	2	398	280	2×M63	1035	65	M20×42	140	12	18	58	500	450	550	19×8	5
280M	4-8	398	280	2×M63	1035	75	M20×42	140	12	20	67,5	500	450	550	19×8	5
315S	2	540	315	2×M63	1160	65	M20×42	140	15	18	58	600	550	660	24×8	6
315S	4-8	540	315	2×M63	1270	80	M20×42	170	15	22	71	600	550	660	24×8	6
315M	2	540	315	2×M63	1290	65	M20×42	140	15	18	58	600	550	660	24×8	6
315M	4-8	540	315	2×M63	1325	80	M20×42	170	15	22	71	600	550	660	24×8	6
315L	2	540	315	2×M63	1320	65	M20×42	140	15	18	58	600	550	660	24×8	6
315L	4-8	540	315	2×M63	1350	80	M20×42	170	15	22	71	600	550	660	24×8	6
355M	2	655	355	2×M63	1500	75	M20×42	140	15	20	67,5	740	680	800	24×8	6
355M	4-8	655	355	2×M63	1530	95	M20×42	170	15	25	86	740	680	800	24×8	6
355L	2	655	355	2×M63	1500	75	M20×42	140	15	20	67,5	740	680	800	24×8	6
355L	4-8	655	355	2×M63	1530	95	M20×42	170	15	25	86	740	680	800	24×8	6

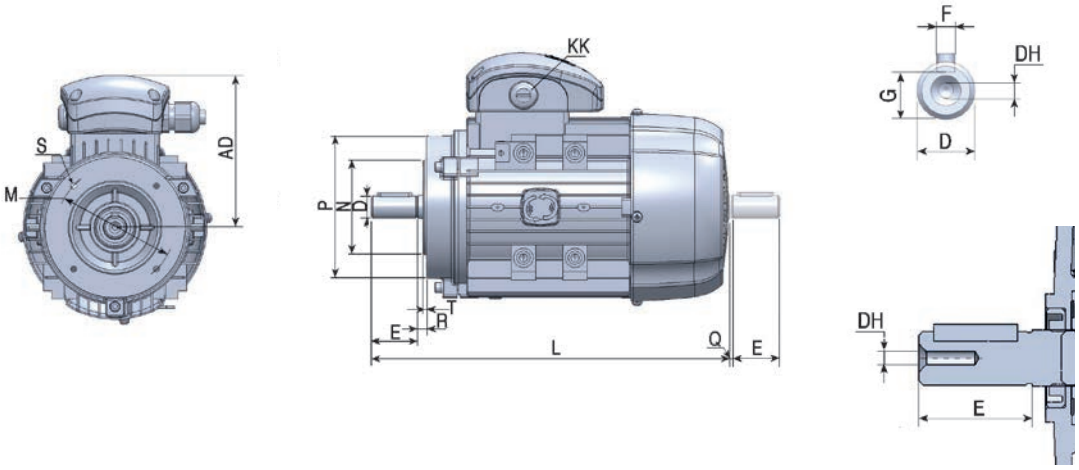

B14

DIMENSIONS (mm)																
TYPE	POLES	AD	H	KK	L	D	DH	E	Q	F	G	B14				
												M	N	P	S	T
80	2-8	130	80	M20	283	19	M6×16	40	3	6	15,5	100	80	120	M6	3
90S	2-8	145	90	M20	330	24	M8×19	50	5	8	20	115	95	140	M8	3
90L	2-8	145	90	M20	358	24	M8×19	50	5	8	20	115	95	140	M8	3
100	2-8	157	100	M20	393	28	M10×22	60	5	8	24	130	110	160	M8	3,5
112M	2-8	177	112	M25	410	28	M10×22	60	5	8	24	130	110	160	M8	3,5
132S	2-8	197	132	M32	480	38	M12×28	80	5	10	33	165	130	200	M10	3,5
132M	2-8	197	132	M32	516	38	M12×28	80	5	10	33	165	130	200	M10	3,5
160M	2-8	255	160	2×M40	613	42	M16×36	110	5	12	37	215	180	250	M12	4
160L	2-8	252	160	2×M40	708	42	M16×36	110	5	12	37	215	180	250	M12	4

B5R/B14

DIMENSIONS (mm)																
TYPE	POLES	AD	H	KK	L	D	DH	E	Q	F	G	B5R / B14B				
												M	N	P	S	T
80	2-8	130	80	M20	283	19	M6×16	40	3	6	15,5	130	110	160	M8	3,5
90S	2-8	145	90	M20	330	24	M8×19	50	5	8	20	130	110	160	M8	3,5
90L	2-8	145	90	M20	358	24	M8×19	50	5	8	20	130	110	160	M8	3,5
100	2-8	157	100	M20	393	28	M10×22	60	5	8	24	165	130	200	M10	3,5
112M	2-8	177	112	M25	410	28	M10×22	60	5	8	24	165	130	200	M10	3,5
132S	2-8	197	132	M32	480	38	M12×28	80	5	10	33	215	180	250	M10	4
132M	2-8	197	132	M32	516	38	M12×28	80	5	10	33	215	180	250	M10	4
160M	2-8	255	160	2×M40	613	42	M16×36	110	5	12	37	265	230	300	14×4	5
160L	2-8	252	160	2×M40	708	42	M16×36	110	5	12	37	265	230	300	14×4	5

Components list

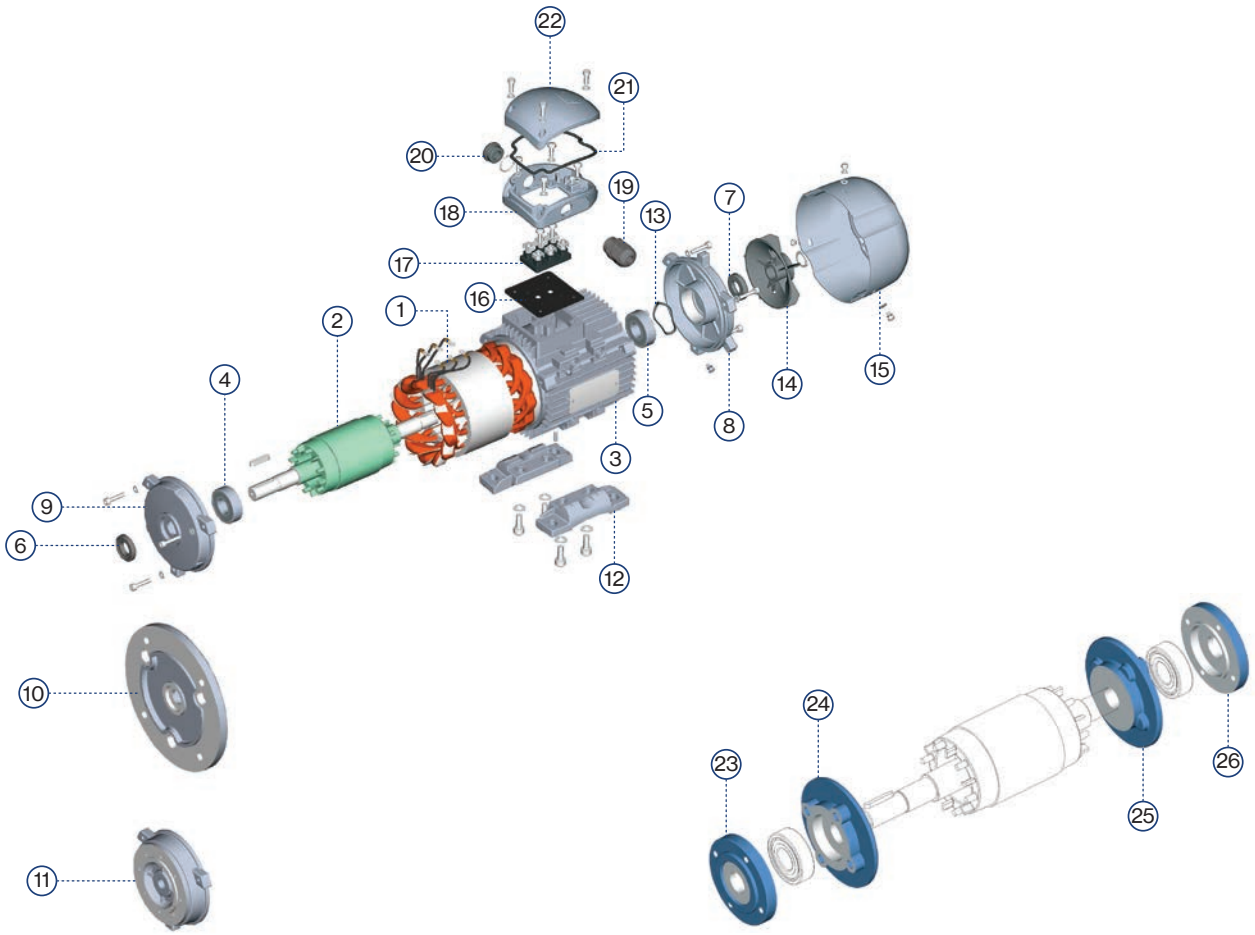

N°	CODE	N°	CODE
1	3PNSTA	14	3PNFAN
2	3PNR0T	15	3PNFCV
3	3PNFRA	16	3PNUCB
4	3PNFBE	17	3PNTER
5	3PNBBE	18	3PNBCB
6	3PNF0S	19	3PNCMP
7	3PNB0S	20	3PNCAP
8	3PNBSH	21	3PNSCB
9	3PNBO3	22	3PNCCB
10	3PNBO5	23	3PNF0B
11	3PNB14	24	3PNFIB
12	3PNFEE	25	3PNBIB
13	3PNWAV	26	3PNB0B

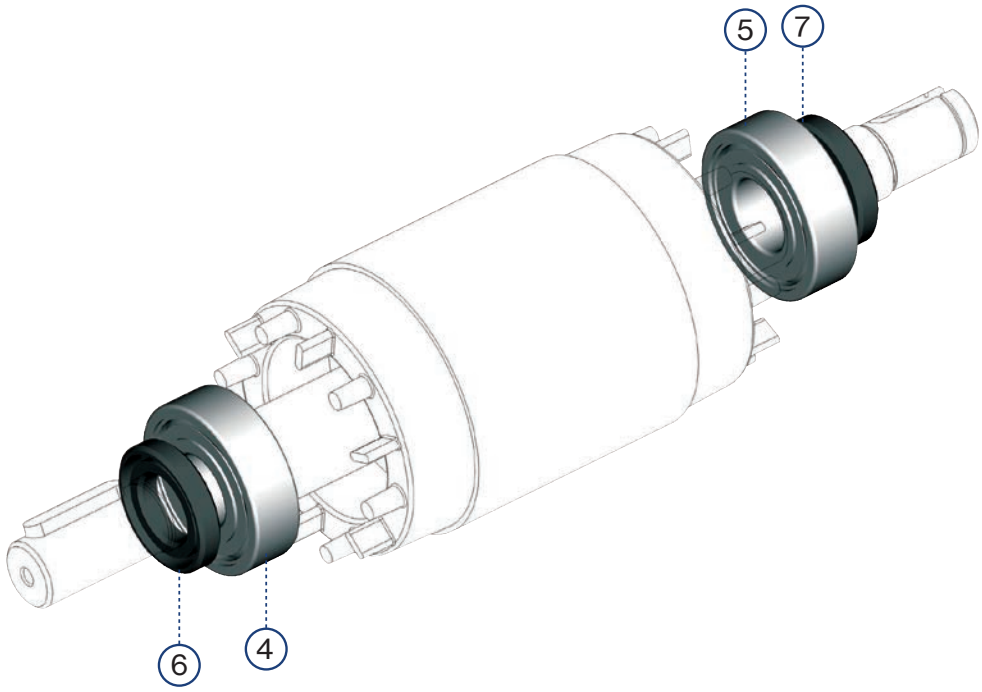

FRAME SIZE	POLES	RUBBER SEAL RING		BEARINGS	
		6	7	4	5
56	2-4	12×24×7	12×24×7	6201 ZZ-C3	6201 ZZ-C3
63	2-4	12×24×7	12×24×7	6201 ZZ-C3	6201 ZZ-C3
71	2-4	15×30×7	15×30×7	6202 ZZ-C3	6202 ZZ-C3
80	2-4	20×35×7	20×35×7	6204 ZZ-C3	6204 ZZ-C3
90	2-4	25×40×7	25×40×7	6205 ZZ-C3	6205 ZZ-C3
100	2-4	30×47×7	30×47×7	6206 ZZ-C3	6206 ZZ-C3
112	2-4	30×47×7	30×47×7	6206 ZZ-C3	6206 ZZ-C3
132	2-4	40×62×8	40×62×8	6208 ZZ-C3	6208 ZZ-C3
160	2-4	45×62×8	45×62×8	6309 ZZ-C3	6309 ZZ-C3
180	2-4	55×72×8	55×72×8	6311 ZZ-C3	6311 ZZ-C3
200	2-4	60×80×8	60×80×8	6312 ZZ-C3	6312 ZZ-C3
225	2-4	65×80×10	65×80×10	6313 ZZ-C3	6313 ZZ-C3
250	2-4	70×90×10	70×90×10	6314 ZZ-C3	6314 ZZ-C3
280	2	70×90×10	70×90×10	6314 ZZ-C3	6314 ZZ-C3
280	4	85×100×12	85×100×12	6317 ZZ-C3	6317 ZZ-C3
315	2	85×110×12	85×110×12	6317-C3	6317-C3
315	4	95×120×12	95×120×12	6319-C3	6319-C3
355	2	95×120×12	95×120×12	6319-C3	6319-C3
355	4	110×130×12	110×130×12	NU 326-C3	NU 326-C3

MARLY

TECHNICAL APPENDIX

Head losses in metres for every 100 metres of straight piping

V	Q h	Diameter of the pipes in mm												
		20	25	30	40	50	65	80	100	125	150	175	200	250
0,5	Q	9,4	14,7	21,2	37.7	59	115	151	235	369	530	723	940	1480
	h	2,4	1,,9	1,5	1	0,8	0,56	0,46	0,36	0,28	0,23	0,19	0,16	0,13
0,6	Q	11,3	17,7	25,4	45,3	70,7	138	181	282	442	636	887	1130	1770
	h	3,3	2,6	2,1	1,5	1,12	0,78	0,65	0,5	0,39	0,32	0,27	0,23	0,18
0,7	Q	13,2	20,6	29,7	52,9	82,5	161	211	329	516	742	1010	1315	2070
	h	4,4	3,4	2,7	1,9	1,5	1	0,86	0,67	0,52	0,43	0,36	0,31	0,24
0,8	Q	15,05	23,6	33,9	60,4	94,5	184	241	377	590	848	115	1505	2360
	h	5,6	4,3	3,4	2,5	1,9	1,3	1,1	0,86	0,67	0,55	0,46	0,4	0,31
0,9	Q	16,95	26,5	38,2	68	106	207	272	423	664	955	1300	1695	2660
	h	6,9	5,3	4,3	3	2,4	1,7	1,4	1,1	0,84	0,69	0,58	0,5	0,39
1	Q	18,8	29,5	42,4	75,5	117,7	230	302	471	737	1060	1445	1880	2950
	h	8,3	6,4	5,1	3,7	2,9	2,1	1,7	1,3	1	0,84	0,71	0,61	0,48
1,1	Q	20,7	32,4	46,6	83	129,5	252	332	518	811	1165	1585	2070	3250
	h	9,9	7,6	6,2	4,4	3,4	2,4	2	1,6	1,2	1	0,85	0,74	0,58
1,2	Q	22,6	35,4	50,9	90,6	141	276	362	565	885	1272	1730	2260	3550
	h	11,7	9	7,2	5,2	4	2,9	2,4	1,9	1,5	1,2	1	0,87	0,69
1,3	Q	24,5	38,3	55	98	153	299	392	612	960	1378	1875	2450	3840
	h	13,5	10,4	8,4	6	4,7	3,3	2,8	2,2	1,71	1,4	1,15	1	0,8
1,4	Q	26,35	41,3	59,3	105,5	165	302	422	660	1032	1473	2020	2635	4140
	h	15,4	11,9	9,6	6,9	5,4	3,8	3,2	2,5	2	1,6	13	1,17	0,92
1,5	Q	28,25	44,2	63,6	113	176,5	345	452	707	1106	1590	2165	2825	4430
	h	17,4	13,5	10,9	7,8	6,1	4,4	3,6	2,8	2,25	1,82	1,5	1,34	1,05
1,6	Q	30,1	47,1	67,8	121	188,5	368	483	753	1180	1695	2310	3010	4730
	h	19,6	15,3	12,4	8,9	6,9	4,9	4,1	3,2	2,55	2,05	1,7	1,53	1,18
1,7	Q	32	50,1	72	128	200	392	513	800	1253	1802	2455	3200	5020
	h	21,9	17,2	13,9	10	7,8	5,4	4,6	3,6	2,85	2,3	1,95	1,7	1,33
1,8	Q	33,9	53	76,3	136	212	415	543	848	1327	1905	2600	3390	5320
	h	24,2	19,1	15,4	11,1	8,7	6	5,1	4	3,15	2,6	2,2	1,9	1,48
1,9	Q	35,8	56	80,5	143,5	224	438	573	895	1400	2015	2740	3580	5610
	h	26,8	21	17	12,3	9,6	6,8	5,6	4,4	3,45	2,85	2,45	2,1	1,64
2	Q	37,7	59	84,8	151	235,5	461	603	943	1475	2120	2885	3765	5910
	h	29,6	23	18,6	13,4	10,5	7,5	6,2	4,9	3,8	3,17	2,7	2,33	1,8
2,1	Q	39,5	62	89	158,5	247,5	484	633	990	1548	2225	3030	3955	6200
	h	33,2	25,1	20,4	14,8	11,5	8,2	6,8	5,4	4,2	3,5	2,95	2,55	2
2,2	Q	41,5	64,9	93,2	176	259	507	663	1036	1620	2330	3175	4145	6500
	h	35	27,3	22,3	16,2	12,5	9,1	7,4	5,9	4,6	3,85	3,25	2,8	2,2
2,3	Q	43,3	67,9	97,5	173,5	271	530	694	1082	1695	2440	3320	4330	6800
	h	38	29,7	24,2	17,7	13,6	9,8	8,1	6,4	5	4,15	3,5	3,05	2,4
2,4	Q	45,2	70,8	101,5	181	282,5	553	724	1130	1170	2545	3460	4520	7090
	h	42,1	32,1	26,2	19,1	14,7	10,6	8,8	6,9	5,45	4,55	3,8	3,3	2,62
2,5	Q	47,1	73,7	105,8	189	294,5	576	755	1178	1843	2650	3610	4710	7390
	h	45	34,7	28,3	20,5	16	11,4	9,6	7,5	5,9	4,9	4,1	3,58	2,84
2,6	Q	49	76,6	110	196	306	599	785	1225	1915	2755	3755	4900	7680
	h	48,3	37,3	30,4	22,2	17,2	12,3	10,4	8,1	6,35	5,25	4,4	3,85	3,07
2,7	Q	50,9	79,6	114,3	204	318	622	815	1271	1990	2860	3900	5090	7980
	h	51,7	40	32,5	23,8	18,5	13,2	11,2	8,7	6,85	5,65	4,75	4,15	3,3
2,8	Q	52,7	82,6	118,5	211,5	330	645	845	1320	2060	2970	4040	5280	8270
	h	55,2	42,5	34,8	25,5	19,9	14	12	9,3	7,35	6,05	5,10	4,45	3,56
2,9	Q	54,6	85,5	123	219	342	668	875	1365	2140	3075	4190	5460	8560
	h	58,7	45,1	37,1	27,1	21,3	15,2	12,8	10	7,85	6,45	5,5	4,75	3,82
3	Q	56,5	88,5	127	226,5	354	691	905	1414	2210	3180	4330	5650	8850
	h	62,9	47,9	39,6	28,8	22,6	16,3	13,6	10,7	8,4	6,9	5,9	5,1	4,1

Q= Capacity in litre per min

V= Water velocity in m/sec

h= Head loss in m of water for every 100m of striaght piping

Note: above data are relevant to completely smooth and cast-iron piping.
For a general estimation, multiply the head losses data by:

0,8 flat rolled new steel piping
1,25 slightly rusty steel piping
0,7 piping in aluminium
0,65 piping in PVC
1,25 piping in concrete fibre

Charge losses in cm of water column

Water speed in m/s	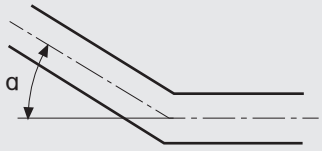 Obtuse angle curves					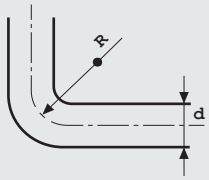 Normal curves					Normal sluice gates / Foot valve / Non return valve			
	= 30°	= 40°	= 60°	= 80°	= 90°	d/r = 0,4	d/r = 0,6	d/r = 0,8	d/r = 1	d/r = 1,5	Energy losses at the exit of discharge pipes V2/²g			
0,1	0,03	0,04	0,05	0,07	0,08	0,007	0,008	0,01	0,0155	0,027	0,03	30	30	0,05
0,15	0,06	0,73	0,1	0,14	0,17	0,016	0,019	0,024	0,033	0,06	0,033	31	31	0,12
0,2	0,11	0,13	0,18	0,26	0,31	0,028	0,033	0,04	0,058	0,11	0,058	31	31	0,21
0,25	0,17	0,21	0,28	0,4	0,48	0,044	0,052	0,063	0,091	0,17	0,09	31	31	0,32
0,3	0,25	0,3	0,41	0,6	0,7	0,063	0,074	0,09	0,13	0,25	0,13	31	31	0,46
0,35	0,33	0,4	0,54	0,8	0,93	0,085	0,1	0,12	0,18	0,33	0,18	31	31	0,62
0,4	0,43	0,52	0,71	1	1,2	0,11	0,13	0,16	0,23	0,43	0,23	32	31	0,82
0,5	0,67	0,91	1,1	1,6	1,9	0,18	0,21	0,26	0,37	0,67	0,37	33	32	1,27
0,6	0,97	1,2	1,6	2,3	2,8	0,25	0,29	0,36	0,52	0,97	0,52	34	32	1,84
0,7	1,35	1,65	2,2	3,2	3,9	0,34	0,4	0,48	0,7	1,35	0,7	35	32	2,5
0,8	1,7	2,1	2,8	4	4,8	0,45	0,53	0,64	0,93	1,7	0,95	36	33	3,3
0,9	2,2	2,7	3,6	5,2	6,2	0,57	0,67	0,82	1,18	2,2	1,2	37	34	4,2
1	2,7	3,3	4,5	6,4	7,6	0,7	0,82	1	1,45	2,7	1,45	38	35	5,1
1,5	6	7,3	10	14	17	1,6	1,9	2,3	3,3	6	3,3	47	40	11,5
2	11	14	18	26	31	2,8	33	4	5,8	11	5,8	61	48	20,4
2,5	17	21	28	40	48	4,4	5,2	6,3	9,1	17	9,1	78	58	32
3	25	30	41	60	70	6,3	7,4	9	13	25	13	100	71	46
3,5	33	40	55	78	93	8,5	10	12	18	33	18	123	85	62
4	43	52	70	100	120	11	13	16	23	42	23	150	100	82
4,5	55	67	90	130	160	14	21	26	37	55	37	190	120	103
5	67	82	110	160	190	18	29	36	52	67	52	220	140	127

The charge loss in the curves is only the one due to the reduction of the liquid threads for the changing of direction: the curves development has to be including the length of the pipeline.

The charge loss in the valves and sluice-gates has been calculated according to practil tests.

Power absorbed by the gland

SHOWN IN THE DIAGRAM HAVING A SPEED 1450 Rpm

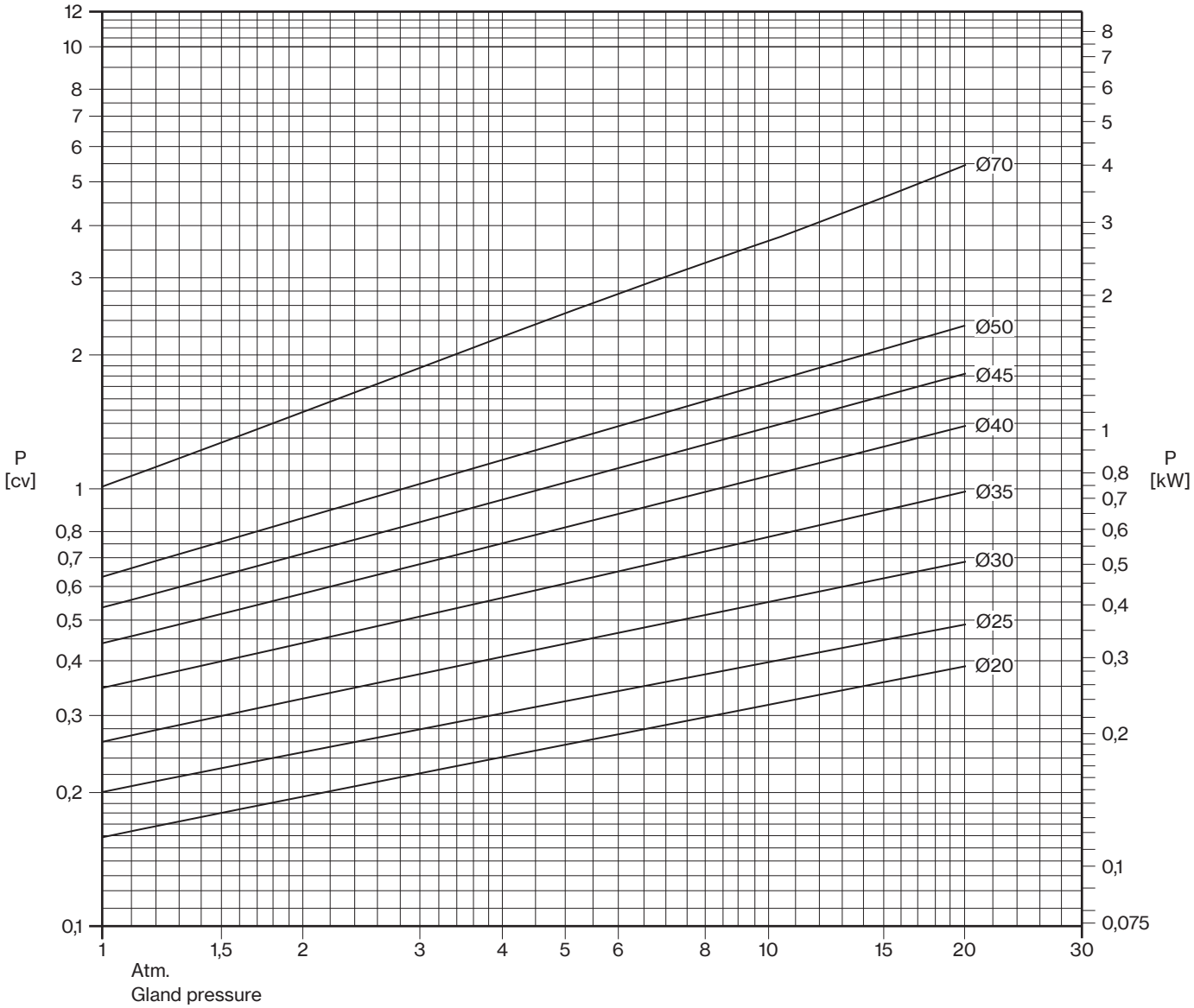

P = Absorbed power at 1450 Rpm in CV

For differents rpm (n) the loss (px) can be calculated with: $$Px = \frac{P}{1450} \times n$$

MARLY

Measurement comparison in unit

Measurement comparison in unit				
	CV	HP	kW	kgm/s
CV	1	0,9863	0,7355	75
HP	1,0139	1	0,7457	76,05
kW	1,36	1,341	1	101,98

Pressure	
Unit	Comparison
1 kg/cm² = 9,81 · N/cm² =0,981 bar = 98100 Pa	1 Pa = 1 · N/cm² = 1 Pascal
1 kg/cm² = 1 at = 10000 kg/m² =techn. atmosphere = 10 m water col at 4° C = 735,56 Torr (mm Hg at 0°C)	
1 lb per square inch = 1 psi = 0,0703 kg/cm²	1 kg/cm² = 14,2 psi

Capacity measures compared at litre				
Unit	Comparison	Unit	Comparison	
Imperial fluid once	0,0284 litre	litre	35,2	Imp. fl. oz
U.S. fluid once	0,0295 litre	litre	33,81	U.S. fl. oz.
Imperial pinte	0,568 litre	litre	1,76	Imp. pinte
U.S. gallon	3,785 litre	litre	0,2642	U.S. gal.
Imperial gallon	4,546 litre	litre	0,22	Imp. gal
U.S. bushel	35,24 litre	litre	0,0284	U.S. bu.
Imperial bushel	36,35 litre	litre	0,0275	Imp. bu.
U.S. barrel	119,22 litre	litre	0,0083	U.S. bbl.
Imperial barrel	163,65 litre	litre	0,00611	Imp. bbl.

Technical appendix

Notices on centrifugal pumps

Efficiency calculation *(known):*

Q *- capacity l/s*
H *- total head in m*
Pa *- absorbed power in kW*
g *- density in Kg/dm³*

$$\eta = g \cdot \frac{Q \cdot H}{102 \cdot Pa} \quad [kW]$$

Absorbed power calculation Pa *(known):*

Q *- capacity l/s*
H *- total head in m*
η *- efficiency*
g *- density in Kg/dm³*

$$Pa = g \cdot \frac{Q \cdot H}{102 \cdot \eta} \quad [kW]$$

Working curves

Between the working curves of a centrifugal pump at different speed, is in force the affinity law, provided that there aren't cavitation effects, and that could be like this:

curves Q-H and Q-Pa at n. rounds are changed in Q'-H' and Q'-Pa' at n' rounds.
According to:

$$Q' = \left(\frac{n'}{n}\right) \cdot Q \qquad H' = \left(\frac{n'}{n}\right)^2 \cdot H \qquad Pa' = \left(\frac{n'}{n}\right)^3 \cdot Pa$$

Indicating table of powers

in kW and kva of the generators to couple with motors

Motor power		Generator power			
		Direct starting		Star-delta-starting	
kW	HP	kW	HP	kW	HP
2,2	3	6	7,5	-	-
3	4	8	10	8	7,5
4	5,5	10	12,5	8	10
5,5	7,5	12,5	15,6	10,8	13,5
7,5	10	15	18,8	14	17,5
9,2	12,5	18,8	23,5	17,2	21,5
11	15	22,5	28	20,5	25,5
13	17,5	26,4	33	23,6	29,5
15	20	30	38	27	34
18,5	25	40	50	33	42
22	30	45	57	40	50
26	35	52	65	45	57
30	40	60	75	52	65
37	50	75	94	65	81
45	60	90	112	77	97
51,5	70	105	131	90	112
55	75	120	150	102	128
66	90	135	170	115	144
75	100	150	190	128	160
92	125	185	230	158	198
110	150	210	260	190	237
132	180	260	323	228	284
147	200	280	360	254	316
165	225	325	404	285	354
185	250	365	454	320	398
200	275	390	485	345	429
220	300	430	535	380	472
240	330	470	584	415	516
265	360	520	646	458	569
300	400	580	720	510	634

Electric measures

Size			Three-phase alternating current		
Pa	=	absorbed power in kW	**Pa**	=	$\frac{1{,}73 \times U \times I \times \cos\varphi}{1.000}$
Pr	=	returned power in kW	**Pr**	=	$\frac{1{,}73 \times U \times I \times \cos\varphi \times \eta_m}{1.000}$
I	=	absorbed current in Amp.	**I**	=	$\frac{Pr \times 1.000}{1{,}73 \times U \times \cos\varphi \times \eta_m}$
Cos φ	=	power factor	**Cos φ**	=	$\frac{Pa \times 1.000}{1{,}73 \times U \times I}$
η_m**%**	=	motor efficiency	η_m**%**	=	$\frac{Pr}{Pa}$
S %	=	slip	**S %**	=	$\frac{n_s - n}{n_s}$
n_s	=	speed of synchronism	n_s	=	$\frac{F \times 120}{P}$

Slip: slip is defined as the differnece between the speed of synchronism and the effective speed.

U = *Nominal voltage*
F = *Frequency in Hz*
n = *Speed of rotation in Rpm*
P = *Number of poles*

Properties of Saturated Water

(Liquid–Vapor): Temperature Table

Temp. °C	Press. bar	Specific Volume m^3/kg		Internal Energy kJ/kg		Enthalpy kJ/kg			Entropy kJ/kg · K		Temp. °C
		Sat. Liquid $v_f \times 10^3$	Sat. Vapor v_g	Sat. Liquid u_f	Sat. Vapor u_g	Sat. Liquid h_f	Evap. h_{fg}	Sat. Vapor h_g	Sat. Liquid s_f	Sat. Vapor s_g	
0.01	0.00611	1.0002	206.136	0.00	2375.3	0.01	2501.3	2501.4	0.0000	9.1562	0.01
4	0.00813	1.0001	157.232	16.77	2380.9	16.78	2491.9	2508.7	0.0610	9.0514	4
5	0.00872	1.0001	147.120	20.97	2382.3	20.98	2489.6	2510.6	0.0761	9.0257	5
6	0.00935	1.0001	137.734	25.19	2383.6	25.20	2487.2	2512.4	0.0912	9.0003	6
8	0.01072	1.0002	120.917	33.59	2386.4	33.60	482.5	2516.1	0.1212	8.9501	8
10	0.01228	1.0004	106.379	42.00	2389.2	42.01	2477.7	2519.8	0.1510	8.9008	10
11	0.01312	1.0004	99.857	46.20	2390.5	46.20	2475.4	2521.6	0.1658	8.8765	11
12	0.01402	1.0005	93.784	50.41	2391.9	50.41	2473.0	2523.4	0.1806	8.8524	12
13	0.01497	1.0007	88.124	54.60	2393.3	54.60	2470.7	2523.3	0.1953	8.8285	13
14	0.01598	1.0008	82.848	58.79	2394.7	58.80	2468.3	2527.1	0.2099	8.8048	14
15	0.01705	1.0009	77.926	62.99	2396.1	62.99	2465.9	2528.9	0.2245	8.7814	15
16	0.01818	1.0011	73.333	67.18	2397.4	67.19	2463.6	2530.8	0.2390	8.7582	16
17	0.01938	1.0012	69.044	71.38	2398.8	71.38	2461.2	2532.6	0.2535	8.7351	17
18	0.02064	1.0014	65.038	75.57	2400.2	75.58	2458.8	2534.4	0.2679	8.7123	18
19	0.02198	1.0016	61.293	79.76	2401.6	79.77	2456.5	2536.2	0.2823	8.6897	19
20	0.02339	1.0018	57.791	83.95	2402.9	83.96	2454.1	2538.1	0.2966	8.6672	20
21	0.02487	1.0020	54.514	88.14	2404.3	88.14	2451.8	2539.9	0.3109	8.6450	21
22	0.02645	1.0022	51.447	92.32	2405.7	92.33	2449.4	2541.7	0.3251	8.6229	22
23	0.02810	1.0024	48.574	96.51	2407.0	96.52	2447.0	2543.5	0.3393	8.6011	23
24	0.02985	1.0027	45.883	100.70	2408.4	100.70	2444.7	2545.4	0.3534	8.5794	24
25	0.03169	1.0029	43.360	104.88	2409.8	104.89	2442.3	2547.2	0.3674	8.5580	25
26	0.03363	1.0032	40.994	109.06	2411.1	109.07	2439.9	2549.0	0.3814	8.5367	26
27	0.03567	1.0035	38.774	113.25	2412.5	113.25	2437.6	2550.8	0.3954	8.5156	27
28	0.03782	1.0037	36.690	117.42	2413.9	117.43	2435.2	2552.6	0.4093	8.4946	28
29	0.04008	1.0040	34.733	121.60	2415.2	121.61	2432.8	2554.5	0.4231	8.4739	29
30	0.04246	1.0043	32.894	125.78	2416.6	125.79	2430.5	2556.3	0.4369	8.4533	30
31	0.04496	1.0046	31.165	129.96	2418.0	129.97	2428.1	2558.1	0.4507	8.4329	31
32	0.04759	1.0050	29.540	134.14	2419.3	134.15	2425.7	2559.9	0.4644	8.4127	32
33	0.05034	1.0053	28.011	138.32	2420.7	138.33	2423.4	2561.7	0.4781	8.3927	33
34	0.05324	1.0056	26.571	142.50	2422.0	142.50	2421.0	2563.5	0.4917	8.3728	34
35	0.05628	1.0060	25.216	146.67	2423.4	146.68	2418.6	2565.3	0.5053	8.3531	35
36	0.05947	1.0063	23.940	150.85	2424.7	150.86	2416.2	2567.1	0.5188	8.3336	36
38	0.06632	1.0071	21.602	159.20	2427.4	159.21	2411.5	2570.7	0.5458	8.2950	38
40	0.07384	1.0078	19.523	167.56	2430.1	167.57	2406.7	2574.3	0.5725	8.2570	40
45	0.09593	1.0099	15.258	188.44	2436.8	188.45	2394.8	2583.2	0.6387	8.1648	45
50	0.1235	1.0121	12.032	209.32	2443.5	209.33	2382.7	2592.1	0.7038	8.0763	50
55	0.1576	1.0146	9.568	230.21	2450.1	230.23	2370.7	2600.9	0.7679	7.9913	55
60	0.1994	1.0172	7.671	251.11	2456.6	251.13	2358.5	2609.6	0.8312	7.9096	60
65	0.2503	1.0199	6.197	272.02	2463.1	272.06	2346.2	2618.3	0.8935	7.8310	65
70	0.3119	1.0228	5.042	292.95	2469.6	292.98	2333.8	2626.8	0.9549	7.7553	70
75	0.3858	1.0259	4.131	313.90	2475.9	313.93	2321.4	2635.3	1.0155	7.6824	75
80	0.4739	1.0291	3.407	334.86	2482.2	334.91	2308.8	2643.7	1.0753	7.6122	80
85	0.5783	1.0325	2.828	355.84	2488.4	355.90	2296.0	2651.9	1.1343	7.5445	85
90	0.7014	1.0360	2.361	376.85	2494.5	376.92	2283.2	2660.1	1.1925	7.4791	90
95	0.8455	1.0397	1.982	397.88	2500.6	397.96	2270.2	2668.1	1.2500	7.4159	95
100	1.014	1.0435	1.673	418.94	2506.5	419.04	2257.0	2676.1	1.3069	7.3549	100
110	1.433	1.0516	1.210	461.14	2518.1	461.30	2230.2	2691.5	1.4185	7.2387	110
120	1.985	1.0603	0.8919	503.50	2529.3	503.71	2202.6	2706.3	1.5276	7.1296	120
130	2.701	1.0697	0.6685	546.02	2539.9	546.31	2174.2	2720.5	1.6344	7.0269	130
140	3.613	1.0797	0.5089	588.74	2550.0	589.13	2144.7	2733.9	1.7391	6.9299	140
150	4.758	1.0905	0.3928	631.68	2559.5	632.20	2114.3	2746.5	1.8418	6.8379	150
160	6.178	1.1020	0.3071	674.86	2568.4	675.55	2082.6	2758.1	1.9427	6.7502	160
170	7.917	1.1143	0.2428	718.33	2576.5	719.21	2049.5	2768.7	2.0419	6.6663	170
180	10.02	1.1274	0.1941	762.09	2583.7	763.22	2015.0	2778.2	2.1396	6.5857	180
190	12.54	1.1414	0.1565	806.19	2590.0	807.62	1978.8	2786.4	2.2359	6.5079	190

MARLY

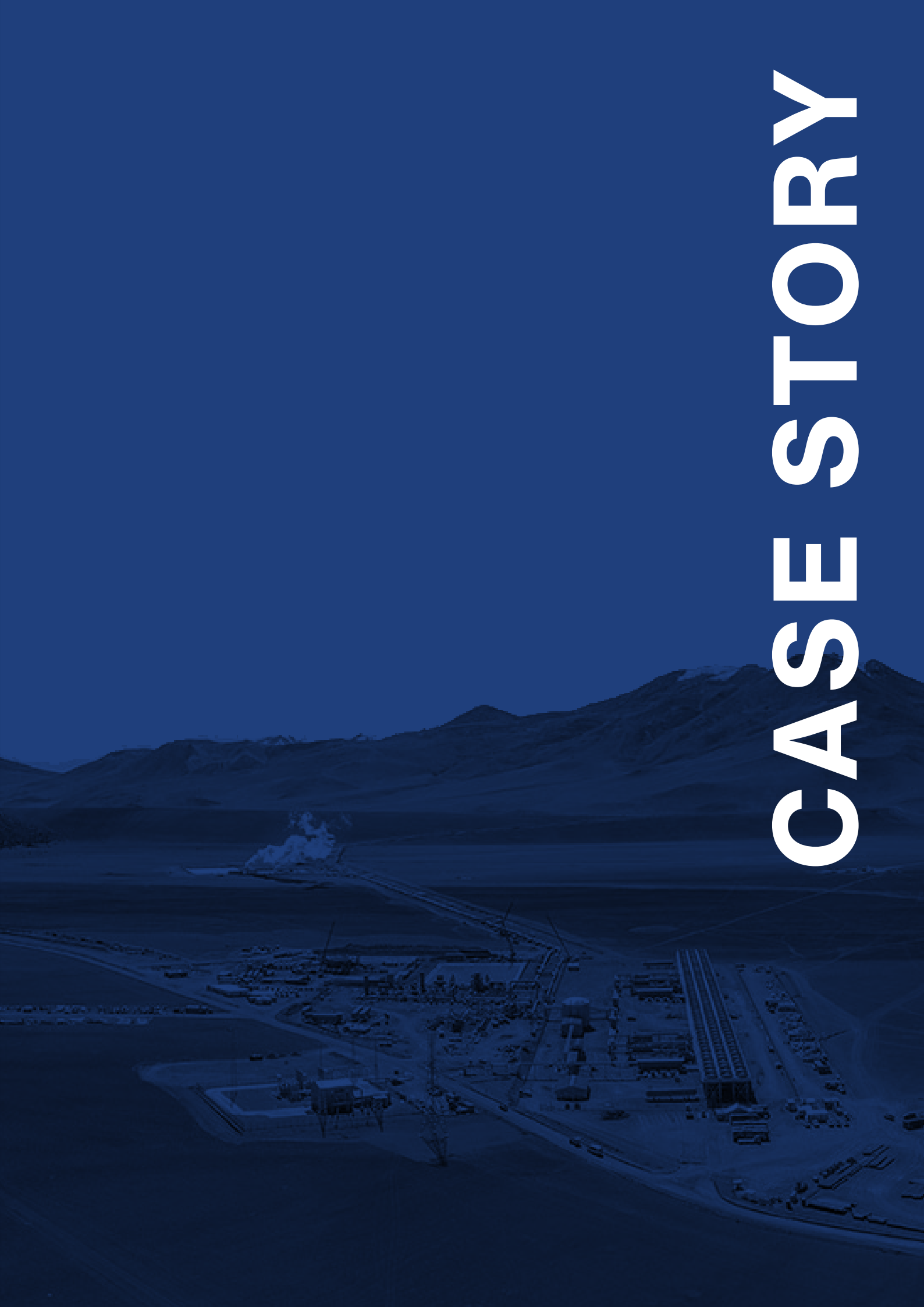

CASE STORY

Cerro Pabellón Geothermal Power Plant

Cerro Pabellón Power plant is owned by Geotérmica del Norte (GDN), the joint venture between Enel Green Power Chile (83.65%) and Enap (16.35%).

This Power Station has a long and successful story that starts at the beginning of 2000, when Enel moved the range of action beyond national borders, leveraging its **100 years of experience in geothermal sector**.

The chosen area is the central America, in particular El Salvador and Chile, where the characteristics of the territory and the huge geothermal potential allow Enel to replicate the Italian experience.

Cerro Pabellón is a high-enthalpy binary cycle plant and thanks to the excellent and reliable experience that Enel got with Marly pumps in the **Larderello geothermal Italian district**, Marly pumps were chosen in order to grant the best performance in a very heavy duty operation conditions.

The GDN power plant is located in the desert of Atacama in the Pampa Apacheta plateau, at about 100 km at NE of Calama town at 4.500 m altitude, close to the border of Bolivia.

Cerro Pabellon Power Station will have a capacity of about **81 MW**, thanks to the 3 phase Power plant expansion under execution, which is equivalent to a total **600 GWh per year**.

Marly in this plant already provided the Vertical Turbine pumps for the condensate steam re-injection phase: in the 2020 Marly supplied n° 14 units of Multistage Horizontal pumps as booster pump to relaunch the ground steam into the binary system Heat-exchanger to feed the production Turbine.

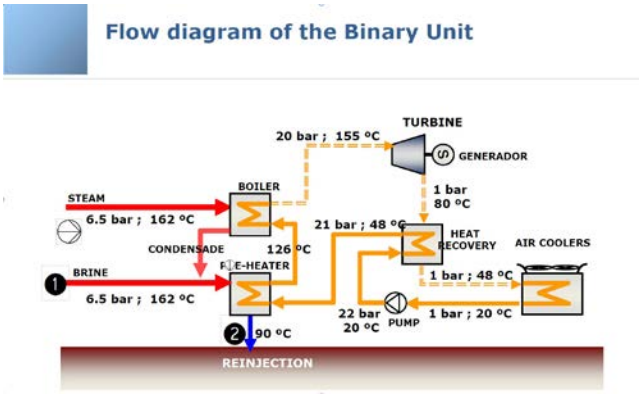

In the diagram is synthetically given the complete production process of the Cerro Pabellon Power plant.

1. In the sector 1 of the diagram, the Pentax multistage horizontal centrifugal pumps are located in order to boost the brine fluid of the ground well into the "Pre-Heater" exchanger.
2. In the sector 2 of the diagram, the Pentax Vertical Turbine centrifugal pumps are located in order to reinject the condensate fluid into ground well to return the liquid in the original reservoir.

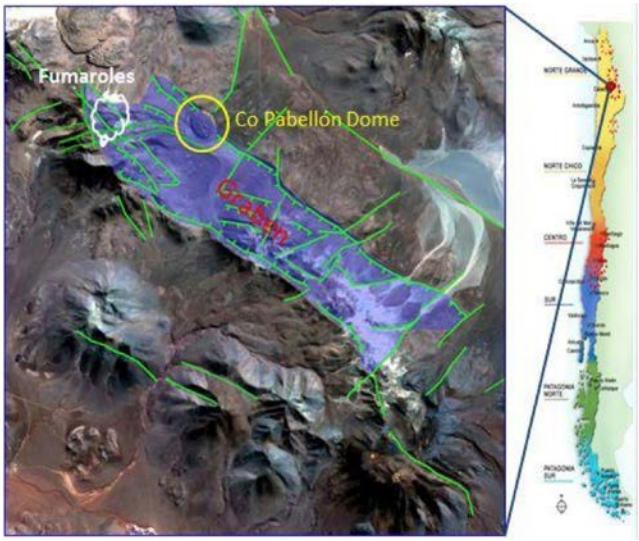

The GDN power plant is located in the desert of Atacama in the Pampa Apacheta plateau, at about 100 km at NE of Calama town at 4500m altitude, close to the border of Bolivia. Cerro Pabellon Power Station will have a capacity of about 81 MW, thanks to the 3 phase Power plant expansion under execution, which is equivalent to a total 600 GWh per year. Pentax in this plant already provided the Vertical Turbine pumps for the condensate steam re-injection phase. In the 2020 Pentax supplied n°14 units of Multistage Horizontal pumps as booster pump to relaunch the ground steam into the binary system Heat-exchanger to feed the production Turbine. In this case the pump technical goals were very challenging since the main operation data was as follow:

- Fluid temperature 165 °C
- Pump duty point : 300 m³/h @ 40 m
- Required NPSH: 1,2 m
- Fluid nature: pressurized Geothermal water
- Water corrosion element: 12.300 ppm of Chlorides
- Water solids (Silica sand) > of 10 gr/m³
- Site elevation: 4.500 m a.s.l.
- Pump ambient temperature -35 °C / + 35 °C

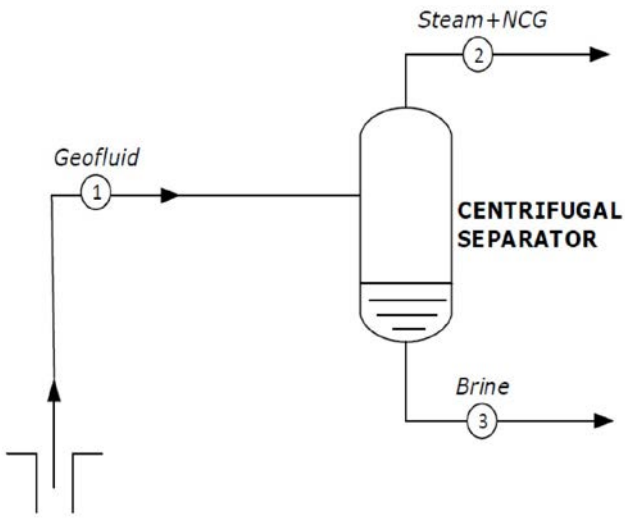

The Challenge of Pentax pumps in this application is to boost the Brine at 165 °C .

This Brine fluid may content relevant (> 10 mg/L) of suspended solids, coming both from the geothermal reservoir (silica sands) and precipitating from a supersaturated brine (SiO2 colloids, polymers, silts)". The source of the fluid is from down ground reservoir by wells of about 1.800 m depth .

Marly pumps model HPMA150.6/4R-X-T53B-75KW-6P is boosting the fluid directly in the heat-exchanger of the binary system in order to heat up the turbine fluid for electric production.

In order to do that a special pump execution fully made of Stainless Steel AISI316 was made with a very high suction property at 950 rpm speed.

CERRO PABELLÓN - GEOTHERMAL POWER PLANT

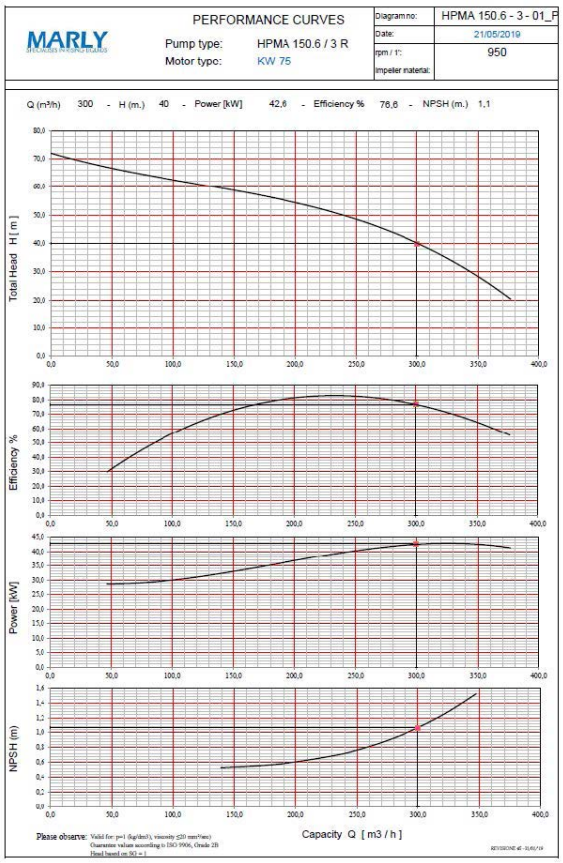

Pump performance characteristics, on which we can appreciate the hydraulic efficiency of 76,6% and the NPSH value of 1,1 m to make the pump resistant to the chemical and mechanical abrasions effects, the following features were adopted:

- Double Mechanical seal cartridge design according to Plan 53B.
- Peek ST530 material on impeller wear-rings and bushings.
- Peek ST530 material on Drum sleeve.
- Stellite 706/712 material is used for suction pump bush-bearing.
- Double mechanical seal – Plan 53B.
- All pump and mechanical seal O-rings made of FFKM.
- Special design of the 1st pump impeller for low NPSH value.
- Special motor design for Inverter operation at 4.500 m elevation.
- Pump ball-bearing oil lubricated.
- PT100 temperature sensors on the pump and motor bearings.

Pump under performance test at Pentax laboratory

Pentax pump model HPM150/3-X-TB52-75-6 installed in the Cerro Pabellon Power plant.

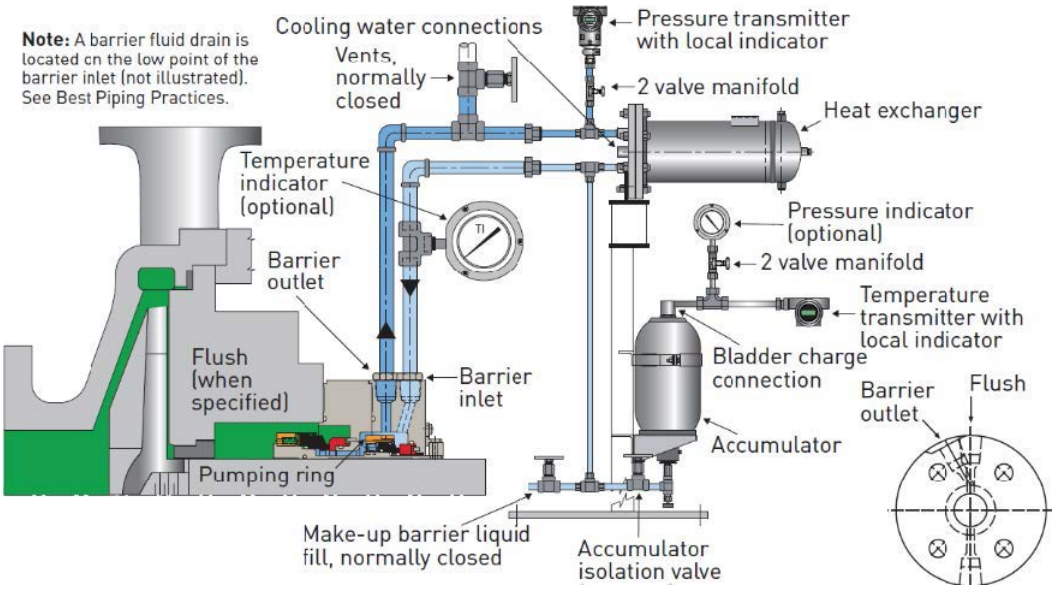

Double mechanical seal system type Plan 53B.
Process side materials are: SIC/SIC/FFKM/AISI316
Cooling liquid is glycol 50% mixture suitable for -40 °C

Mining Nuraxi Figus

The **mining hub of Sulcis**, situated in the South East of Sardinia, between the provinces of Carbonia and Iglesias, represented for many years, the **biggest mining district of Italy** having the most important mining production for lead, zinc, and coal. The mining activity has been started in the 1720 under the rulling time of Sabaudo government, but it is on 1850, with private company called Monteponi, that the mining activities reached the mass production involving more than 1500 workers, becoming one of the most strategic industrial hub of the country.

Today this mining district stopped the extracting activities and it is under a strong reconversion phase involving research and experimental projects such as "Cryogenic Distillation", "Energy Storage", etc..

To preserve the mining heritage and safely implement the said research projects, the today owner company called Carbosulcis, started several efficiency and safety improvement plans of the actual systems.

One of the most important system improvements is the mining **water dewatering of the Nuraxi Figus** mining from level -400 to the surface; this water at ground is feeding the fire- fighting tanks of the mining plant and partially the drinking water distribution system of the close municipalities.

This pumping system, in order to grant the proper dewatering of all mining areas, needs to deliver at surface about 4.000 m 3/day of water. The old pumping system was delivering the said flow of water by two re-launching pumping stations, the first placed at the mining bottom level at the altitude of – 397 m, with tow pumps model WKF 150/3, while at the second re-launching station was placed at the level of -150 m of altitude, with two pumps model WKF 150/3.

Please see here the overall system drawing with the said old design. This old system was in the needs of 4 pumps units to be properly controlled in the intermediate tanks, having a total installed motor power of 2.240 kW, with heavy maintenance costs for the said 4 pumps.

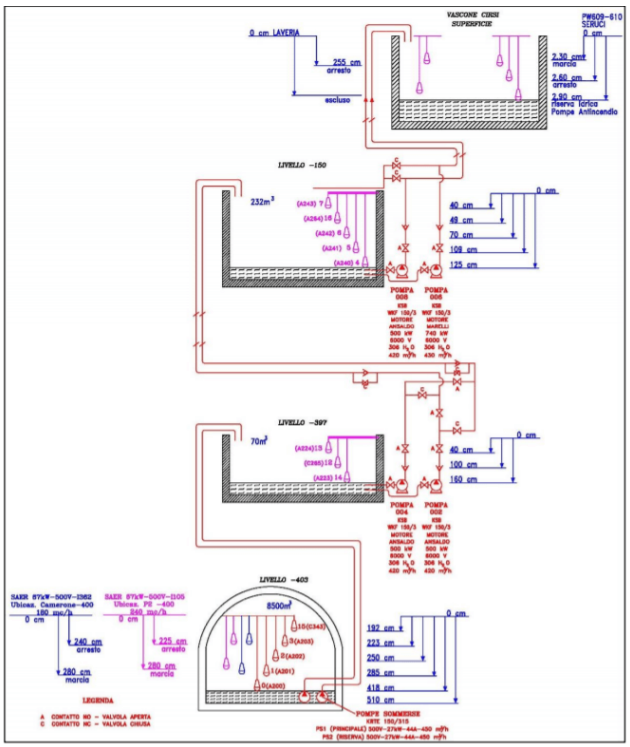

Marly has provided the first pumping unit made of a **multistage horizontal type model HPR125/5**, coupled with an electric motor of 780 kW middle voltage supply, which will be driven by “Soft-Start” starting unit in order to optimize the absorbed current and sensibly reduce the “water-hammer” effects to the rising delivery pipes.

This first pump has been placed at the bottom of the collecting tank at the altitude of -397 m, with the scope to deliver the water directly to the surface tank called “CIRSI” without the need of any re-launching pumping station. The above has been made thanks to the re-utilization of the existing piping with some minor adjustment.

The main nominal performance of the Marly pump that allow deleting the intermediate re- launching station are as follow:

- Flow : 350 m³/h
- Pressure : 550 m
- Rotating speed : 2.950 rpm
- Hydraulic Efficiency at the duty point : 76,6%
- NPSHr of the pump at the duty point : 4,9 m
- Absorbed power of the pump at the duty point: 684 kW
- Motor installed power: 750kW – 6KV – 50Hz
- Here on the side is shown the performance curves of the mentioned Marly pumps model HPR125/5

The pump materials are customized according the special chemical components of the water, therefore the usage of special bronze type “G-Cu-Al9-Fe3-UNI5273-CC3314” for all impellers and diffusers, was needed, in order to grant a long working life of the pump.

A second pumping unit model **Marly HPR125/5** coupled with 750 kW motor, will completely replace the two couples of WKF pumps used in the previous system. Here following are given the main power consumption figures obtained by adopting the mentioned Marly pump, which allowed an drainage system optimization by reducing the consumed power of about 25%, as following detailed.

Old dewatering system data

- n° 3 pumps model WKF150/3 coupled with 500 kW motor each
- n° 1 pump WKF150/3 coupled with 740 kW motor
- Total: 2.240 kW installed

New dewatering system data

- n° 2 pump model Marly HPR125/5 coupled with 750 kW motor
- Total: 1.500 kW installed
- Total Saved Power: 740 kW

Energy saving calculation

During the last actual measurement of the consumed power of the old system, conducted on 2014, the recorded data were as follow:

MINING NURAXI FIGUS

- Water quantity delivered: 3.169.910 m³/year
- Electric Energy Consumed : 3.750.975 kWh
- Saving electric energy recorded during the 2018, last four months' time (with Marly pump in operation) compared with the same period on 2017 is 27,33%
- The saved kWh during the full equivalent year of operation is : 1.025.141 kWh/Year

Here following are shown some pictures related to the key phases for the Marly HPR125/5 pump assembling, pump installation and commissioning.

Pump-Motor assembling over the basement

Pump assembling phase of the hydraulic stack

Enel Green Power Larderello

In the central part of Italy, in the region of Tuscany, there is the **biggest district of ENEL Green Power** (the State National Energy company) for the exploitation of the Geothermal energy from the underground giant deposit.

This is a sole example of exploitation of geothermal Energy in the world, since the quantity of electricity produced and quality of extracted steam are unique worldwide.

In fact, in this region there are more than 70 geothermal power stations, fed with that underground steam. Those power stations produce about 1.50 Megawatt of power electricity; which corresponds on about 30% of the energy demand of the Tuscany region.

Marly, is acting in this industry sector since more that 20 years and the cooperation with Enel started about 15 years ago. Thanks to this long lasting cooperation Marly developed some specific product in order to overcome to some very challenging application like chemically aggressive water and high temperature water to be pumped in the production cycle of the geothermal power station.

Now Marly can offer to its industrial clients a unique experience and application knowledge which come from this long experience made in the Enel Power Station sector.

The exploitation of the Larderello steam underground deposits, consist of drilling wells up to 6.000m depth to extract the geothermal water steam. The extracted steam has an average temperature of 160- 200 °C and a pressure of 5-10 bars.

The steam is conveyed with Stainless steel pipes to the local power stations which transform the steam into electrical Energy by steam turbines systems. Marly pumps are used in the following key phases of the Energy production.

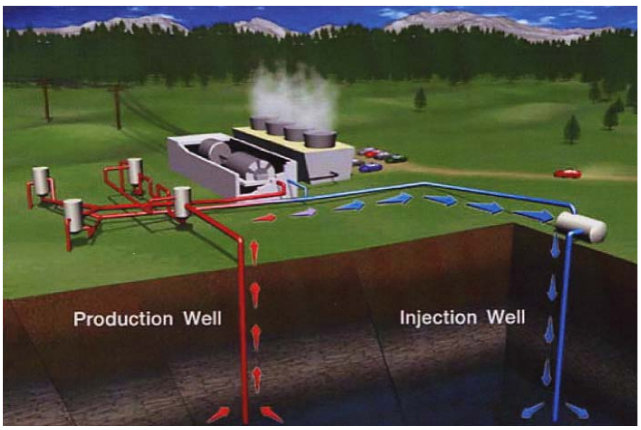

1. In case the steam pressure is too low to feed the turbine, the Marly End-Suction pumps are used to re-launch the steams into the turbine at higher pressure
2. Once the process of energy production is completed, about 60% of the geothermal steam is re- condensate into water and collected to be re-inject underground, to feed the wells for news team production. Multistage Marly pumps are used to feed the wells with that re-condensed water.
3. Marly pumps are also used in some special cleaning phase of the steam called AMIS phases. In that application the pump is handling condensed water with a very high concentration of caustic soda.

In the following picture is shown the Marly pump model HP 100-4 made of casted stainless steel AISI 316, producing a flow of 250 m³/h, with a pressure of 200 m; the power of the installed electric motor is 160 kW. This pump is part of the pumping system made of 3 units which re-inject the condensate water, at about 85 °C into the feeding wells.

Below picture shown a Marly pumping station made of 3 End-Suction pumps model CAX150-400 with 75 kW motor and 2 multistage pumps model HPR 125/5 with 90 kW motors. All the 5 pumps are made of casted stainless steel AISI 316. The total capacity of the station is 1.200 m³/h, at the pressure of 150 m. All the pumps are controlled with Variable Speed Controllers.

The following picture shows another pumping station for well re-injection, located in Lago Boracifero into the Larderello area. In this site there are about 180 suction wells which are used to feed 26 local power stations.

This set of 4 Marly pumps are all made of casted stainless steel AISI316, the pumps are of the model HP125-2, coupled with an electric motor of 315 kW each. Each pump produces 350 m³/h flow at 220 m head, all the pumps are driven by variable speed controllers, in order to keep the wells feeding pressure precisely stable and constant.

All those pumps installed are working safely since more that 10 years, facing a regular yearly maintenance program, but never suffering of critical failures.

MARLY

GENERAL SALES CONDITIONS

ART. 1 - DEFINITIONS

For the purpose of this Contract, the following expressions shall bear the respective meaning set forth below:

a) Seller/Producer: means "PENTAX INDUSTRIES SPA";
b) Purchaser: means "natural or legal person who purchases the Seller's goods in business activities";
c) Product/s or Good/s: means "standard product and products which are personalized for the Purchaser, produced and/or sold by the Seller, such as: electric pumps, pumps, and accessories;"
d) Contract and/or General Sales Conditions: means "the present contract;
e) Orders or Request of quotation means "the written request from the Purchaser to buy the Products from the Seller";
f) Order Confirmation: means "the Order acceptance document from the Seller";
g) Party/Parties: means "Seller and/or Purchaser";
h) Technical assistance for installation of Products means "The Seller's assistance through its operators who will travel to the Site, to support the Purchaser's staff by transferring technical notions about ways to install the Products. The Operators will not provide the direct installation of the Products on the Site;
i) Site or Worksite: means "the place of installation of Products";
j) Operator/s: means "the owners of the company, employees and collaborator of the Seller who can go to the Site for Technical assistance for installation of Products.
k) Business day/Business days: means the days from Monday to Friday of each week, excluding Saturdays, Sundays, and public holidays as listed in the official calendar of national holidays in Italy, as well as any company closure days notified in writing by the Seller with at least 8 (eight) days' prior notice. If a contractual deadline falls on a day that is not considered a Business Day, such deadline shall be deemed extended to the next following Business Day.
l) Days: means calendar days, as opposed to Business Days as defined under letter k) above.

ART. 2 – CONTENT AND FORM OF THE CONTRACT

2.1 Replacement of previous agreements and application of present Contract to future sales. The present General Sales Conditions regulate the relationship between the Parties, replace any previous agreement or document signed and apply to all the purchases which will take place between the Parties even if not expressly referred to in subsequent reports, and prevail on the general Conditions of purchase of the Purchaser.

2.2 Modification of the General Sales Conditions. Every modification of the present General Sales conditions shall be expressly confirmed in writing by the Seller.

2.3 Binding Orders. Orders shall be considered binding only when:(i) they are accepted or confirmed in writing by the Seller's legal representative or by a person expressly authorized by the Seller, through the issuance of an Order Confirmation; and (ii) the Order Confirmation is signed by the Purchaser or, alternatively, if 2 (two) Business days have passed since its transmission to the Purchaser without any objections or responses being raised by the latter. The Order becomes irrevocable the moment the Seller has knowledge of it.

2.4 Refusal of Orders. Without prejudice to its own rights, the Seller reserves the right to refuse the Orders if not completed or to block the deliveries of the Products if the Purchaser does not carry out its obligations.

2.5 Modifications and suspension of Contract. If the Purchaser modifies or suspends the Contract, the Seller has the right to terminate the Contract and ask for damage compensation, or to increase the agreed price. It is understood that the Seller shall under no circumstances be obligated to reduce the previously agreed price.

2.6 Order Procedure. The Purchaser sends the Order or the Request of quotation to the Seller in writing. The Seller may send a quotation/offer and subsequently issue the Order confirmation.

2.7 Communication of Wrong Order Confirmations. Should the Purchaser find an error and/or omission of any kind in the Order confirmation, he shall within 2 (two) Business days communicate such circumstances to the Seller, to allow him to check the Order Confirmation and to make the necessary corrections or changes.

2.8. Modifications and improvement to the Products. The Seller reserves the right to modify the Products compared to what is outlined in the related offer and/or Order Confirmation, when such modifications are necessary and/or appropriate due to technical and/or production needs or are mandatory under applicable law governing the Contract, provided that they do not reduce and/or alter the performance and/or quality characteristics of the Products agreed upon between the Parties (by way of example and not limitation: variation of materials, accessories, finishes, color shades, etc.). In the event of modifications and/or improvements, the Seller commits to notifying the Purchaser, who shall not be entitled to terminate the Contract for such reasons.

2.9 Mandatory rules of country of Site. In case the country of the Site for the supply of the Products requests the enforcement of mandatory rules, the Purchaser shall be responsible for communicating to the Seller, the relevant regulations in English, before signing the Order Confirmation. Failure to communicate the above-mentioned regulations, the Purchaser shall not be liable in any way or for any reason for the non-compliance of such regulations.

ART. 3 – PAYMENT CONDITIONS

3.1 Price. The price of the Products shall be indicated in the Order Confirmation.

3.2. Currency. The amounts in the Confirmation Order shall be indicated by the Seller in Euro or in US Dollars (USD).

3.3 Payment conditions. The payment conditions shall be specified in the Order Confirmation, and the Purchaser undertakes to pay by the deadlines indicated in the Order Confirmation, or as otherwise agreed by the Parties.

3.4 Late Payments. If the payments are late, default interest is applied as indicated in D.Lgs 231/2002, as well as bank charges and financing costs incurred by the Seller because of late payment.

3.5 Obligation to pay in case of postponement request of delivery and/or Site is unsuitable to receive Goods. If the Purchaser asks for the postponement of the delivery date of the Goods as indicated in art. 5.2, the Seller has the right to ask the Purchaser for the balance of the price payment and a compensation for the deposit of the Goods at its own site or at a third party's site for its whole duration, with prior written communication to the Purchaser. With the sending of the request of the payment of the price balance, the Purchaser shall be considered as having received formal notice in accordance with the law. The costs and risks of transportation of Goods for their deposit at a third subject's shall be entirely borne by the Purchaser and shall be paid when the invoice is presented. Within the end of every month or at another due date at its discretion, the Seller shall issue an invoice to the Purchaser for the payment of the deposit costs.

3.6 Revision of prices in case of Purchaser's request to modify measurements and/or the Contract. In case the Purchaser requests modification to measurements of Goods in accordance with art. 4.3, or modifications of the Contract (by way of example and not limited to: request for extra Goods, change of material type, color variations, etc..), the Seller shall have the right to a revision of an increased price. The price agreed between the Parties shall not be in any case reduced. In case of non-acceptance of modifications by the Seller, the Purchaser shall pay the entire agreed price.

3.7 Clause limiting the pro position of exceptions. The Purchaser cannot avoid payment of owed amount, as there is a clause expressly called the clause "solve et repete", indicated in article 1462 of the Italian Civil Code.

3.8 Travel allowance. The Seller shall have the right to ask the Purchaser for a travel allowance and a reimbursement of any additional costs to those indicated in the Order Confirmation, as better described in art. 5.5.

ART. 4 – DELIVERY AND PASSING OF RISK

4.1 Delivery date. The delivery date is indicated in the Order Confirmation, the Seller is not liable for any delays in the delivery of Products, determined by fortuitous circumstances, force majeure or in any case circumstances beyond his control. The delivery dates do not have a peremptory or essential nature but are purely meant as approximate and non-binding for the Seller. Any delays in the delivery shall not entail a penalty or indemnity or compensation for damages, or application of default interests, or even a partial termination of the Contract.

4.2 Request for postponement of delivery and/or unsuitability of Site to receive Products. In case the Purchaser requests for any reason a postponement of delivery date of Products (by way of example and not limited to: delay in work progress on Worksite, delay in carrying out of work preparations to receive Products etc), the Seller shall store the Products at its own company or at a third party's and shall have the right to a reimbursement for the deposit of the Products for the whole duration of the deposit of Goods and moreover, shall have the right to the payment of the balance of the price of the Goods as referred to in the above article 3.4.

4.3 Delay in the delivery due to Purchaser. In case the Seller is late in the delivery for reasons caused by the Purchaser, the Seller shall not be liable for the delay or any allowance or damage compensation that may be requested from him, as indicated in art. 4.1.

4.4 Delivery clause. Unless otherwise agreed, the Seller delivers the Products according to Incoterms ® 2020, indicated in the Order Confirmation.

4.5 Passing of risk. Risk of loss or deterioration of Products goes to Purchaser at time of delivery of Products to Purchaser in accordance with art. 4.4.

4.6. Storage Obligation. The Purchaser undertakes to store the Products separately from other goods in the Worksite, in a dry, under shelter and supervised area, considering the particular climactic conditions of the place of destination and the nature of the material with which the Goods are built.

4.7. Communication of any damages during transportation. Upon receiving the Products at his own establishment, the Purchaser must check that the Products are intact and have not undergone deterioration or damages, and must communicate to the Seller and to the carrier any deterioration or damage of the Products within 2 (two) Business days of the receipt of the Products.

ART. 5 – TESTING, INSTALLATION AND TECHNICAL ASSISTANCE FOR INSTALLATION

5.1 Testing. The Purchaser may request, under penalty of forfeiture, the testing of the products in the Order. The testing, if requested, shall be carried out exclusively at one of the Seller's locations, chosen at the Seller's discretion, within 10 (ten) Business days from the notification to the Purchaser that the Products are ready for testing. The Seller may specify a cost for the execution of the testing in the Order Confirmation, which shall be borne by the Purchaser. The Seller shall prepare the "Testing Report," which shall be signed by both Parties. Any interventions for the removal of defects and/or faults shall be quantified and agreed upon by the Parties regarding the timing and methods of intervention, taking into account the Seller's production needs. The lapse of 15 (fifteen) Days without the Purchaser's participation in the testing will result in the Purchaser's waiver of the testing, and the Seller may proceed with the testing internally without any opposition.

5.2 Installation. The Installation of the Products at the Site shall be carried out by and at the expense of the Purchaser, in accordance with the procedures set forth in the "Instruction Manual" provided by the Seller.

5.3. Technical assistance for the installation at the Site. The Purchaser may ask for Technical assistance for the installation of the Goods in the Order, should he ask for it after filling out the Order, the Seller shall accept to carry out the Technical assistance at his discretion. Should the Seller accept to carry out the Technical assistance for installation the Seller shall communicate the relative costs which shall be entirely borne by the Purchaser as indicated in art. 5.7.

5.4. Number of persons. The number of persons (Operators, as defined in art. 1 lett. K) who will be in charge of the Technical assistance for the installation of the Goods shall be decided at the Seller's discretions. All the staff dedicated to the assistance is equipped with suitable individual protection (D.P.I.), based on pinpointed risks, and communicated to the Purchaser by the Seller in writing.

5.5. Extension of stay for Technical Assistance for installation of the Goods. In case the Technical assistance for installation of Goods days agreed on between the Parties should be modified and/or extended for any reason not liable to the Seller, any increased costs shall be borne by the Purchaser (ex. higher travel costs), as well as a daily allowance for each Operator, whose sum is specified in the Order Confirmation or subsequently following the request for Technical assistance for the installation. The Purchaser undertakes to pay for the owed amounts when paying the balance of the price.

5.6. Available spaces on the Site: restrooms and kitchen. The Purchaser undertakes to equip the Site with adequate sanitary facilities and suitable spaces to allow the Operators to cook and have meals. If no hotel is available near the Worksite, the Purchaser shall also arrange for decent and clean accommodation for the Operators' overnight stay.

5.7 Expenses to be borne by the Purchaser. If the Seller carries out the Technical assistance for the installation, the following expenses shall be borne by the Purchaser:

a) travelling expenses (round-trip airfare ticket) and of prophylaxis for each of the Seller's Operators, according to what the Farnesina suggests (Ministry of Foreign Affairs) or what is considered appropriate for each Operator;

b) extra travelling expenses (ex. surcharge or new airfare ticket) for each Operator, because of early or delayed return to Italy for whatever reason which is not attributable to Seller;

c) travel insurance expenses, accident, death, medical assistance in general extra, for each Operator beyond the duration of the stay for reasons not attributable to the Seller;

d) transfers in private car or in public means of transportation from the airport to the accommodation, from the accommodation to the Site and vice versa, of the Operators;

e) room and board expenses for each Operator: each Operator shall have a single room with private restroom at his disposal as well as a laundry service, a bar/restaurant service, a cleaning service and the room shall be in a secure, supervised area. The board shall include: breakfast, quick lunch (also on Worksite), dinner;

f) expenses for interpreting services in English and in the local language at the Site.

ART. 6 - RETENTION TITLE

The Products remain the property of the Seller until full payment of the price as per Article 3.1. Any formalities (e.g., contract registration) required in the Purchaser's country for the validity of this article shall be borne by the Purchaser. The Purchaser undertakes, in the event of resale of the Products to third parties before full payment to the Seller, to inform third parties that the Products belong to the Seller until full payment is made. In the event of termination of the Contract due to the Purchaser's breach, the price installments paid shall be retained by the Seller as compensation within the limits set by law, without prejudice to the right to claim further damages arising from such termination.

ART. 7 - GUARANTEE

7.1 Seller's liability. The Seller is liable for the defects of the Products, only if the defects are not due to the Purchaser's fraud or fault, and the Seller is able to verify the existence of the defects contested by the Purchaser.

7.2 Duration of the guarantee and of the deadline for reporting defects. The defects of the Goods shall be reported in writing to the Seller within 30 (thirty) Days of the discovery or from the time the Purchaser should have known about them. The guarantee shall expire within 2 (two) years of the delivery of the Goods.

7.3 Consequences in case of defects. The Seller may, at its discretion, repair, replace, or issue a credit note in the case of a Product defect, after receiving from the Purchaser photos of the defective Products via email, according to the procedures to be agreed upon by the Parties. If the Seller requests the Purchaser to send the Product to its premises or to those of its supplier for repair, the Purchaser shall bear the cost and risk of transporting the Product, including the cost and risk of returning the Product to the Site.

7.4 Prohibition for the Purchaser to repair the defective Product. The Purchaser is not authorized, in the case of defective Products, to proceed without the written consent of the Seller: a) to repair or replace the defective Product directly or indirectly through third parties; b) to send the Products to the Seller.

7.5. Exclusion of Warranty. The warranty is excluded in the following cases:

(a) failure, delayed, or partial payment of the price by the Purchaser; (b) alterations and/or modifications of the Products not authorized in writing by the Seller; (c) improper use of the Products; (d) storage and/or deposition of the Products in a manner not suitable for the nature and type of the Products; (e) electrical or hydraulic connection errors, or inadequate or absent protection of the Product; (f) improper installation of the Product; (g) the Product has been subjected to overloads beyond the rated limits; (h) contact of the Products with abrasive or corrosive liquids, or any other substances incompatible with the materials used in the construction of the Products; (i) normal wear and tear of the Products and/or their materials; (j) inadequate transportation methods if the transportation is managed by the Purchaser.

7.6 Exclusion of Liability. Without prejudice to the application of the laws regarding liability for damage caused by defective products, the Purchaser hereby waives any claim for damages and any right to cancel the Order, in whole or in part, and/or suspend payment for the Products, even if limited to the disputed batch, pursuant to Article 3.7 of this Contract.

ART. 8 - PACKAGING

8.1 Standard packaging. The standard packaging provided by the Seller for the Products and accessories is in pallets, cartons, or wooden crates.

8.2. Non-standard packaging. If the Purchaser requires a different type of packaging from the standard, it shall be communicated in the Order under penalty of forfeiture.

ART. 9- HARDSHIP CLAUSE

9.1 Bound to perform contractual duties. Each Party of this Contract is bound to perform its contractual duties even if the events have rendered performance more onerous than could reasonably have been anticipated at the time of the formation of the Contract.

9.2 Negotiation of new contractual terms. Notwithstanding art. 9.1, where a Party proves that:

a) the continued performance of its contractual duties has become excessively onerous due to an event beyond its reasonable control which it could not reasonably have been expected to have taken into account at the time of the formation of the Contract; and that

b) it could not reasonably have avoided or overcome the event or its consequences,

the Parties are bound, within a reasonable time of the invocation of this article, to negotiate new contractual terms which reasonably allow for the cons quences of the event.

9.3 Termination of the Contract because of lack of agreement between the Parties. Where art. 9.2 applies, but where new contractual terms which reasonably allow for the consequences of the event are not agreed by the other Party to the Contract as provided in that article, the Party invoking this article is entitled to termination of the Contract.

9.4 Consequences in case of termination of the Contract. If the Seller enforces the present article, and the Purchaser does not agree with the new contractual

conditions, the Purchaser shall have the right to terminate the present Contract but shall not be entitled to a refund of what was already paid to the Seller

ART. 10 - EARLY TERMINATION OF THE CONTRACT

10.1 Early termination of the Contract. The Seller may terminate this Contract with immediate effect, by means of an email notification followed by a written notice sent by means of communication ensuring evidence and date of receipt, in case of a breach of contractual obligations by the Purchaser, amounting to a justifiable reason for immediate contract termination or in case of occurrence of exceptional circumstances which justify the earlier termination, as set forth below.

10.2 Breach of Contractual obligation. The Parties jointly agree that the breach of the provisions under articles 2.5, 3.4, 3.6, 9.3, 11.2, 13.2, 15.2 is to be considered in any case, whatever the importance of the violation, as a justifiable reason for immediate Contract termination. Furthermore, the breach of any other contractual obligation, which is not remedied by the breaching party within 30 (Thirty) days after having been invited in writing to do so by the order Party, shall be considered as a justifiable reason for the immediate Contract termination.

10.3 Exceptional circumstances. Shall be considered as exceptional circumstances justifying the immediate Contract termination: bankruptcy, any kind of composition between the bankrupt and the creditors, death or Purchaser's failure, civil or criminal penalties and any other circumstance that could compromise the Purchaser's reputation, any important changes in the juridical structure or in the management of the Purchaser, as well as any circumstances which may affect the punctual carrying out of the obligations set forth in the Agreement.

10.4 Consequences in case of early termination. In the event of early termination of the contract, the Purchaser recognizes the Seller's right to retain the amounts received by him as an adjustment for the price of the Goods and to request any amount still owing until the complete attainment of the total price indicated in the Order Confirmation in accordance art. 3.1, except for any further damage.

ART.11 - VALIDITY OF THE CONTRACT

1.1 Invalid or unenforceable clause. Should any clause be considered invalid or unenforceable by the judgement of a Court of competent jurisdiction or award of an Arbitral Tribunal, all other provisions shall remain in full force and effect.

11.2 Replacement of any invalid prevision. The Parties agree, however, to replace, when possible, any provision declared invalid by a provision which shall reflect their initial intent, as objectively and consistently as possible and in accordance with the basic relationship existing between the Parties.

ART. 12- NO WAIVER

The non-enforcement of any provision contained in this Contract shall not be construed by the Seller as a waiver of the right to enforce the provision at another time under different circumstances and/or enforce other provisions of this Contract.

ART. 13 - FORCE MAJEURE

13.1 Force majeure events. In the event of an Act of God (including but not limited to a flood, earthquake, typhoon, epidemic or other natural calamity), war, civil war, or armed conflict or the serious threat of the same (including but not limited to a hostile attack, blockade, embargo, riot or insurrection), governmental order or regulation (including but not limited to prohibition or restriction of importation or exportation or the regulation or allocation of energy resources), labour disputes (including but not limited to a strike, slowdown, lockout or sabotage), or any other causes beyond the reasonable control of the parties hereto (including a fire, power failure, delay in the delivery of component and/or raw materials), neither Party shall be liable for any failure to perform any of its obligations hereunder.

13.2 Termination of the Contract due to force majeure. Any Party hereto shall have the right to terminate this Agreement upon prior written notice if either party is unable to fulfil its obligations under this Agreement due to any of the above-mentioned causes and such inability continues for a period of 6 (six) months

ART. 14 - COMMUNICATION

14.1 Form of the communication. All correspondence, communications and documents between the Parties shall be in writing in English, Spanish or French (by e-mail, courier) and shall be sent to the last known address of the other Party.

14.2 Receiving of the communication. The communications sent by mail shall be deemed to be received after 7 (seven) days from the sending. The communications sent by e-mail shall be deemed to be received the same day of the sending.

ART.15 - INTELLECTUAL PROPERTY

15.1 Ownership of Intellectual Property. The Purchaser expressly recognizes the Seller's ownership of intellectual property rights relating to present Contract, by way of example and not limited to (brands, technical and commercial documentation related to samples, catalogues, schedules, ideas, photographic and audiovisual images etc.). Any use, reproduction, dissemination or representation of such document can occur exclusively following a written authorization written by the Seller and within the limits indicated in the same authorization. Such rights are protected by the Italian law and by International regulations.

15.2 Prohibition of anti-competitive behaviour. The Purchaser is prohibited from displaying anti-competitive behaviour of the intellectual property rights, which go against the aforementioned regulations and/or agreements between the Parties.

ART. 16 – MEDIATION AND JURISDICTION

16.1 Dispute resolution with Purchaser residing or having his registered office in the European Union (Mediation and Jurisdiction).

16.1.1 Mediation. Any dispute arising from the relationship between the Parties concerning the interpretation, execution, validity, and termination of this Contract shall be submitted to a mediation procedure conducted by a sole mediator, appointed, and proceeding in accordance with the Mediation Rules of the Mediation Centre for Europe, the Mediterranean and the Middle East having its seat in Strasbourg, which Rules are in force at the date of filing of the application for mediation.

16.1.2 Exclusive jurisdiction. In the event of a negative outcome of the conciliation attempt within forty-five (45) days from the filing of the conciliation request, or within any other term agreed upon by the Parties, the dispute will be exclusively referred to the Court of Verona (Italy).

16.1.3 Venue for mediation procedure. The venue for the mediation procedure is in Padua (Italy). The language of the procedure is English.

16.2 Dispute resolution with Purchaser residing or having its registered office in a Non-EU country (Mediation and Arbitration).

16.2.1 Mediation. Any dispute arising from the relationship between the Parties concerning the interpretation, execution, validity, and termination of this Contract shall be submitted to a mediation procedure conducted by a sole mediator, appointed, and proceeding in accordance with the Mediation Rules of the Mediation Centre for Europe, the Mediterranean and the Middle East having its seat in Strasbourg, which Rules are in force at the date of filing of the application for mediation.

16.2.2 Arbitration. In the event that the mediation is not successful, the arbitration proceedings shall be conducted in accordance with the Arbitration and Internal Rules of the European Court of Arbitration being part of the European Centre of Arbitration, having its seat in Strasbourg and of which adoption of this clause constitutes acceptance, by a sole arbitrator, who will be appointed, by the Central Registrar Strasburg.

16.2.3 Seat of mediation and arbitration, language and substantive law. The seat of the mediation and arbitration proceedings shall be Padua (Italy). The language of the proceedings shall be English. The applicable rules of substantive law shall be Italian law.

16.2.4 Emergency measures. In any case, the Parties reserve the right to seek the competent judicial authority in the event of the need to obtain emergency measures to protect their rights

ART 17 - APPLICABLE LAW

The present Contract is governed by the United Nations Convention on the International Sales of Goods and, with respect to questions not covered by such Convention by the law of Italy.

ART. 18 - PRIVACY POLICY

In compliance with the Italian Personal Data Protection Code Legislative Decree No. 196/2003), and the General Data Protection Regulation (EU Regulation 2016/679) we inform you that your personal information will be recorded and handled for legal, fiscal and commercial purposes. The processing of your personal data may be performed also to send advertising materials or to carry out commercial communication activities related to PENTAX INDUSTRIES SPA. You are not obliged to give us your personal information. If you do not provide your personal information, it may be impossible for us to refer, respond to, or investigate your complaint or request. This provision does not apply to the processing of personal data performed to send advertising materials to carry out commercial communication activities. We may share your information with our employees, contractors acting on our behalf, consultants, any public or private authority that must access your data, who are subject to confidentiality agreements, only for the abovementioned purposes. Your data may be disseminated through our web site or our publications for commercial reasons. The abovementioned collection and handling of information, which may be automatically processed, will be made using those tools as are appropriate to guarantee its security and confidentiality. The collection and handling of your personal information will run for a period of ten (10) years after the termination of the contractual relationship. After that period, the information will be erased. You are entitled to the rights as per articles 15-22 of EU Regulation 2016/679 and you may access your personal information to correct, update, rectify, make anonymous, integrate, cancel and/or block it. The Data Controller is PENTAX INDUSTRIES SPA.

COMPANY WITH QUALITY, ENVIRONMENT, HEALTH AND SAFETY MANAGEMENT CERTIFIED SYSTEMS
UNI EN ISO 9001: Certificate No. 50 100 3634
UNI EN ISO 14001: Certificate No. 50 100 12552
UNI ISO 45001: Certificate No. 50 100 14960

50Hz

REGISTERED OFFICE
Viale dell'industria, 1
37040 Veronella (VR) Italy
Tel. +39 0442 489 500

OPERATIONAL SITE
Via Salvo D'Acquisto, 4B
42020 Albinea (RE) - Italy
Tel. +39 0522 597 112

VERONA BUSINESS REGISTER
02807990235
VAT No. and Tax Code: 02807990235

www.marly-pumps.it
sales@marly-pumps.it

MARLY

manufacturer:
PENTAX S.p.A.

rev. 12b_04/2026