60Hz

foras®

WATER PUMPS

GENERAL CATALOGUE

www.foras-pumps.it

The energy of experience
FORAS s.p.a.
Viale dell'Industria, 1
37040 Veronella (VR) - Italia
Tel. +39 0442 489550
Fax +39 0442 489560
com@foras-pumps.it
www.foras-pumps.it
foras
WATER PUMPS

HISTORY

For many years **Pentax** has held a large share of the world market for motorized pumps. The sales department is constantly working to better serve existing customers and to open up new markets. This is possible thanks to the wide range of products available which allows to cover most of the applications in the pump field. Special attention is also paid to market surveys, so that any new requirements can be immediately transferred to the research and development department: the best way to properly develop and forecast future scenarios.

1989
Pentax is the result of a strategy designed at the end of the '80s and oriented to the creation of a corporate body structured on the decentralization of production

1990
The company was born from the fusion of Elettromac and Zetabase, two realities with years of experience in the sector. Thanks to advanced technologies and a rationalization of the production process, in the 90's the company imposed itself on the market

1994
Foras joins the group

2000
Increase model production, number of customers and delivery speed

2010
The Pentax group expands again with the entry of Marly: a company specialized in the realization of industrial pumps

2018
The group, now leader in the sector, reaches a consolidated turnover of 70 million euros

2019
Start of works to expand the operational headquarters with the creation of a new logistics hub of more than 8,000 square meters

2022
Installation of the 500kW photovoltaic system and start of commercial office expansion work

2024
Exa Pumps joins the group: a company specialized in the realization of submersible pumps

MISSION

After more than **30 years of activity** we can finally trace the guidelines that have governed and directed the industrial development of **Pentax Industries SpA**. Actions and processes that have intersected with the obvious aim of creating value, benefits to be redistributed to the various components of the production and distribution process.

A rational allocation of available resources, together with a refined program of production decentralization have allowed the company to adapt to changing market conditions, each time with extreme rapidity.

Maximum attention to the markets, therefore, with the commitment to respond in real time to the specific needs of the different markets, paying particular attention to technological progress. All this in the perspective of a careful policy for **customer satisfaction**.

"Creating value is our main goal"

-

Gianluigi Pedrollo, Chair man

VALUES

Reliability
Choosing Pentax means choosing safety at every stage

Quality
Where there is control, there is reliability: the basis for success

Speed
Impeccable delivery time

Flexibility
Pentax studies each case thoroughly, identifies the best solution and then takes action with security

Variety
The best service: a wide range of Pentax products, one for every need

OFFICIAL JOURNAL OF THE EUROPEAN UNION

Regulation UE 547/2012
ANNEX II

«The benchmark for most efficient water pumps is MEI ≥ 0,70».

«The efficiency of a pump with a trimmed impeller is usually lower than that of a pump with the full impeller diameter. The trimming of the impeller will adapt the pump to a fixed duty point, leading to reduced energy consumption. The minimum efficiency index (MEI) is based on the full impeller diameter».

«The operation of this water pump with variable duty points may be more efficient and economic when controlled, for example, by the use of a variable speed drive that matches the pump duty to the system».

Information on benchmark efficiency is available at:
www.europump.org/efficiencycharts.

CERTIFICATO
Nr. 50 100 3634 Rev.010

SI ATTESTA CHE / THIS IS TO CERTIFY THAT

IL SISTEMA DI GESTIONE PER LA QUALITÀ DI
THE QUALITY MANAGEMENT SYSTEM OF

PENTAX S.p.A.

SEDE LEGALE E OPERATIVA:
REGISTERED OFFICE AND OPERATIONAL SITE:

VIALE DELL'INDUSTRIA 1
IT - 37040 VERONELLA (VR)

SEDI OPERATIVE: VEDI ALLEGATO 1 / OPERATIONAL SITES: SEE ANNEX 1

È CONFORME AI REQUISITI DELLA NORMA
HAS BEEN FOUND TO COMPLY WITH THE REQUIREMENTS OF

UNI EN ISO 9001:2015

QUESTO CERTIFICATO È VALIDO PER IL SEGUENTE CAMPO DI APPLICAZIONE
THIS CERTIFICATE IS VALID FOR THE FOLLOWING SCOPE OF APPLICATION

Progettazione e fabbricazione di elettropompe e sistemi di pressurizzazione per acque. Commercializzazione di pompe sommerse e accessori per pompe. Procedura per lo svolgimento delle attività di pesatura per la determinazione della "Massa Lorda Verificata del contenitore" (VGM) secondo il Metodo 2 previsto dagli emendamenti al Capitolo VI Regola 2 della Convenzione SOLAS 74 come emendata (IAF 18, 29)

Design and manufacture of electric pumps and pressure systems for water. Trade of submersed pumps and accessories for pumps. Weighing procedures for obtaining the "Verified Gross Mass" (VGM) of a packed container according to the Method no. 2 prescribed by the amendments to SOLAS 74 Convention, chapter VI, regulation 2, as amended (IAF 18, 29)

Per l'Organismo di Certificazione / For the Certification Body: TÜV Italia S.r.l.
Validità / Validity: Dal / From: 2024-11-01; Al / To: 2027-10-31

ACCREDIA SGQ N° 086A

Data emissione / Issuing Date: 2024-10-28
Francesco Scarlata
Direttore Divisione Business Assurance
Business Assurance Division Manager

PRIMA CERTIFICAZIONE / FIRST CERTIFICATION: 2003-12-22

"LA VALIDITÀ DEL PRESENTE CERTIFICATO È SUBORDINATA A SORVEGLIANZA PERIODICA A 12 MESI E AL RIESAME COMPLETO DEL SISTEMA DI GESTIONE AZIENDALE CON PERIODICITÀ TRIENNALE"
"THE VALIDITY OF THE PRESENT CERTIFICATE DEPENDS ON THE ANNUAL SURVEILLANCE EVERY 12 MONTHS AND ON THE COMPLETE REVIEW OF COMPANY'S MANAGEMENT SYSTEM AFTER THREE YEARS"

TÜV Italia • Gruppo TÜV SÜD • Viale Fulvio Testi, 280/6 • 20126 Milano • Italia • www.tuvsud.com/it

CERTIFICATO
Nr. 50 100 12552 Rev.005

SI ATTESTA CHE / THIS IS TO CERTIFY THAT

IL SISTEMA DI GESTIONE AMBIENTALE DI
THE ENVIRONMENTAL MANAGEMENT SYSTEM OF

PENTAX S.p.A.

SEDE LEGALE E OPERATIVA:
REGISTERED OFFICE AND OPERATIONAL SITE:

VIALE DELL'INDUSTRIA 1
IT - 37040 VERONELLA (VR)

SEDI OPERATIVE: VEDI ALLEGATO 1 / OPERATIONAL SITES: SEE ANNEX 1

È CONFORME AI REQUISITI DELLA NORMA
HAS BEEN FOUND TO COMPLY WITH THE REQUIREMENTS OF

UNI EN ISO 14001:2015

QUESTO CERTIFICATO È VALIDO PER IL SEGUENTE CAMPO DI APPLICAZIONE
THIS CERTIFICATE IS VALID FOR THE FOLLOWING SCOPE OF APPLICATION

Fabbricazione di elettropompe e sistemi di pressurizzazione per acque mediante processi di lavaggio e verniciatura di fondo dei getti di ghisa effettuati da terzi, lavorazioni meccaniche, bilanciatura rotanti, assemblaggio, verniciatura, imballo e spedizione (IAF 18, 29)

Manufacture of electric pumps and water pressurization systems, including third-party washing and primer coating of cast-iron castings, mechanical machining, rotating component balancing, assembly, painting, packaging and shipping (IAF 18, 29)

CERTIFICAZIONE RILASCIATA IN CONFORMITÀ AL REGOLAMENTO TECNICO ACCREDIA RT-09
CERTIFICATION ISSUED IN ACCORDANCE TO ACCREDIA TECHNICAL REGULATION RT-09

Per l'Organismo di Certificazione / For the Certification Body: TÜV Italia S.r.l.
Validità / Validity: Dal / From: 2026-06-16; Al / To: 2029-06-15

00077

Data emissione / Issuing Date: 2026-06-10
Francesco Scarlata
Direttore Divisione Business Assurance
Business Assurance Division Manager

PRIMA CERTIFICAZIONE / FIRST CERTIFICATION: 2014-05-16

"LA VALIDITÀ DEL PRESENTE CERTIFICATO È SUBORDINATA A SORVEGLIANZA PERIODICA A 12 MESI E AL RIESAME COMPLETO DEL SISTEMA DI GESTIONE AZIENDALE CON PERIODICITÀ TRIENNALE"
"THE VALIDITY OF THE PRESENT CERTIFICATE DEPENDS ON THE ANNUAL SURVEILLANCE EVERY 12 MONTHS AND ON THE COMPLETE REVIEW OF COMPANY'S MANAGEMENT SYSTEM AFTER THREE YEARS"

TÜV Italia • Gruppo TÜV SÜD • Viale Fulvio Testi, 280/6 • 20126 Milano • Italia • www.tuvsud.com/it

CERTIFICATO
Nr. 50 100 14960 Rev.003

SI ATTESTA CHE / THIS IS TO CERTIFY THAT

IL SISTEMA DI GESTIONE SICUREZZA E SALUTE DEI LAVORATORI DI
THE OCCUPATIONAL HEALTH AND SAFETY MANAGEMENT SYSTEM OF

PENTAX S.p.A.

SEDE LEGALE E OPERATIVA:
REGISTERED OFFICE AND OPERATIONAL SITE:

VIALE DELL'INDUSTRIA 1
IT - 37040 VERONELLA (VR)

SEDI OPERATIVE: VEDI ALLEGATO 1 / OPERATIONAL SITES: SEE ANNEX 1

È CONFORME AI REQUISITI DELLA NORMA
HAS BEEN FOUND TO COMPLY WITH THE REQUIREMENTS OF

UNI EN ISO 45001:2023

QUESTO CERTIFICATO È VALIDO PER IL SEGUENTE CAMPO DI APPLICAZIONE
THIS CERTIFICATE IS VALID FOR THE FOLLOWING SCOPE

Progettazione e fabbricazione di elettropompe e sistemi di pressurizzazione per acque mediante processi di lavaggio e verniciatura di fondo dei getti di ghisa, lavorazioni meccaniche, bilanciatura rotanti, assemblaggio, verniciatura, imballo e spedizione. Commercializzazione di pompe sommerse e accessori per pompe (IAF 18, 29)

Design and manufacture of electric pumps and pressure system for water by processes of: washing and priming of cast iron items, mechanical machining, impellers and motor shafts balancing, assembling, painting, packing and shipment. Trade of submersed pumps and accessories for pumps (IAF 18, 29)

Per l'Organismo di Certificazione / For the Certification Body: TÜV Italia S.r.l.
Validità / Validity: Dal / From: 2024-02-27; Al / To: 2027-02-26

ACCREDIA SCR N° 009F

Data emissione / Issuing Date: 2024-01-31
Francesco Scarlata
Direttore Divisione Business Assurance
Business Assurance Division Manager

PRIMA CERTIFICAZIONE / FIRST CERTIFICATION: 2018-02-27 (EMESSO DA ALTRO ODC/ ISSUED BY OTHER CB)

"LA VALIDITÀ DEL PRESENTE CERTIFICATO È SUBORDINATA A SORVEGLIANZA PERIODICA A 12 MESI E AL RIESAME COMPLETO DEL SISTEMA DI GESTIONE AZIENDALE CON PERIODICITÀ TRIENNALE"
"THE VALIDITY OF THE PRESENT CERTIFICATE DEPENDS ON THE ANNUAL SURVEILLANCE EVERY 12 MONTHS AND ON THE COMPLETE REVIEW OF COMPANY'S MANAGEMENT SYSTEM AFTER THREE YEARS"

TÜV Italia • Gruppo TÜV SÜD • Viale Fulvio Testi, 280/6 • 20126 Milano • Italia • www.tuvsud.com/it

Rentox

INDEX

PERIPHERALS 15

PE 18

PL 21

PC 23

SELF-PRIMING 25

JA 28

JXF 31

PLUS A 34

PLUS SA 38

PA 42

JAM 44

JA 150-300 47

MON/A 50

JXM 52

THREADED CENTRIFUGAL 55

KM 58

KBJ 64

KB 67

RA 72

SD 75

SC 83

SE 86

CENTRIFUGAL FLANGED 89

MN 98

MNG-MNGX 99

MA-MAX / 4MA-4MAX 100

MULTISTAGE HORIZONTAL 181

PLUS 184

PLUS S 192

MULTISTAGE VERTICAL 203

PLUS V/L 206

PLUS LG 207

PLUS SV/SL/SLX 218

PLUS SLG/SLXG 227

PLUS HX 234

PLUS HS/HX 240

IE3-IE4 MOTORS 255

80-132 256

160-355 257

BOOSTER SET 265

AQUADOMUS 266

AQUASET 269

AQUASET+VSD 270

DRAINAGE AND SEWAGE 271

SP/SPV 274

SPM 277

DR 279

FC 281

DB 287

FM 289

FTR 101 293

FTR/FTRT 295

DC 300

DS 303

FV 305

FV4 309

SUBMERSIBLE WELL PUMPS 313

5FES 318

4E 322

6E 342

6ES 356

6-8-10LMG line 365

6LRH & 6LM line 391

8LRH & 8LM line 410

10-12LM & E14 line 431

SUBMERSIBLE WELL MOTORS 455

4MFE/6MFE 457

6R/8R/10R 461

PTR12/PTR14 467

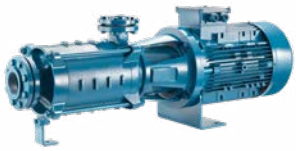

INDUSTRIAL LINE 471

BMV-4BMV 473

BMH-4BMH 474

HP SERIES 489

PSC 492

VP SERIES 495

ACCESSORIES 499

ELECTRONIC FLOW CONTROL 500

VARIABLE SPEED DRIVE 501

PROTECTION/CONTROL PANEL 505

TANKS 510

MEMBRANES 510

PRESSURE SWITCHES 511

PRESSURE GAUGES 511

FLEXIBLE HOSES 511

CONNECTORS 512

VALVES 512

FLOAT SWITCHES 512

CABLES JOINTS 513

LEVEL PROBES 513

GENERAL SALES CONDITIONS 514

Foras®

WATER PUMPS

PERIPHERALS

PERIPHERAL PUMPS

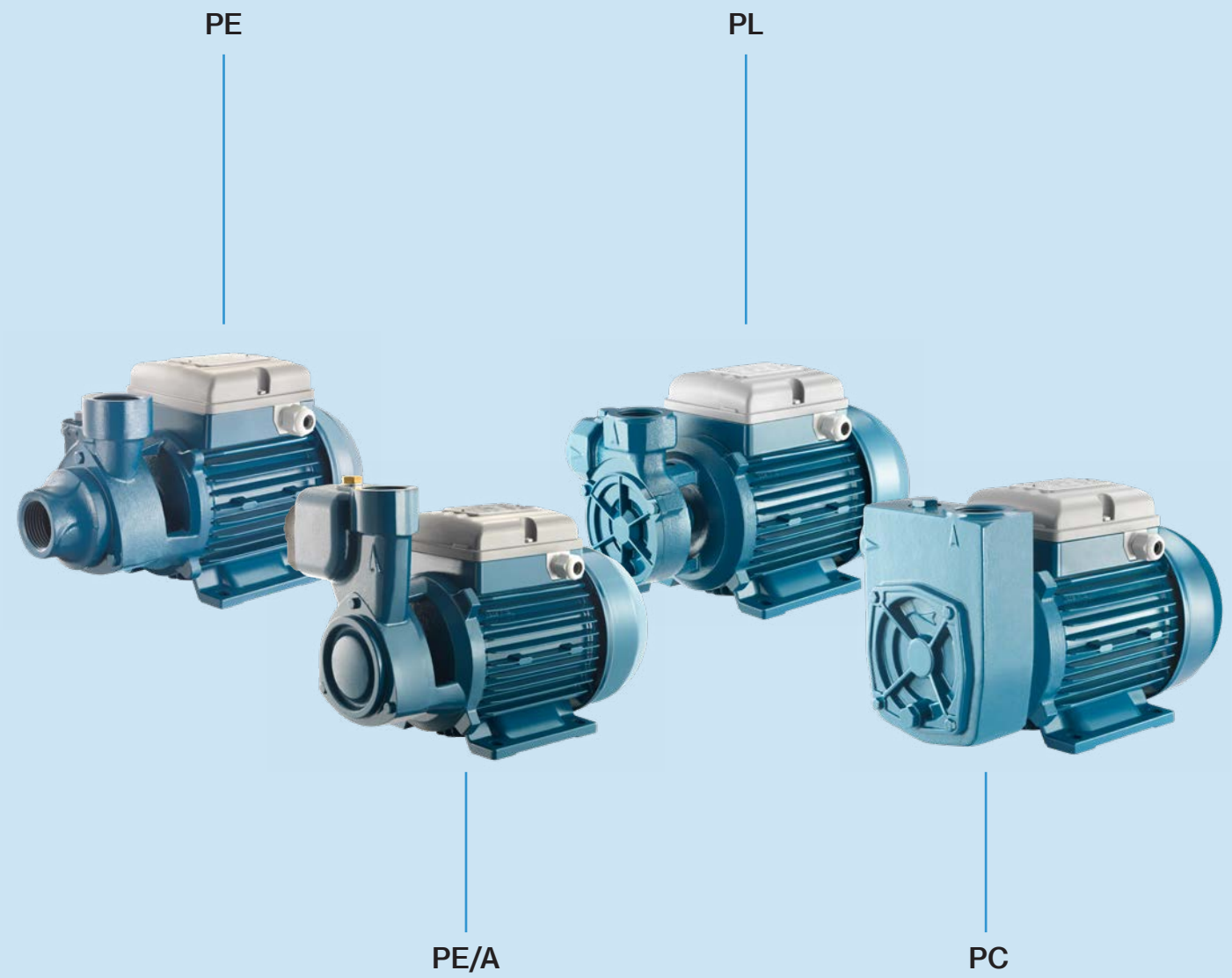

Range of peripheral and liquid ring type positive displacement pumps; they are characterized by the high ratio between the performances offered and the power required.

Applications:

- Small domestic installations
- Boiler feeding
- For washing
- Pressurization of industrial plants
- Small autoclaves
- Transfer of liquids

PERIPHERAL PUMPS

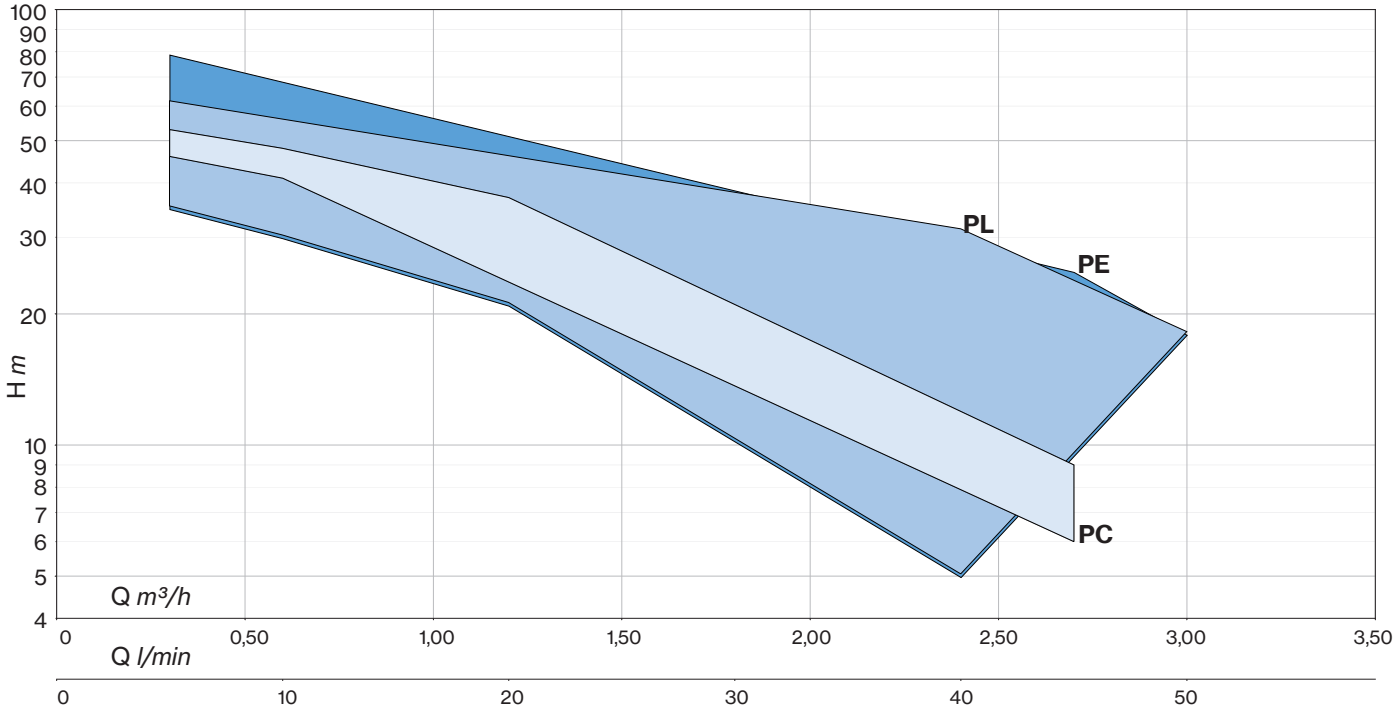

PE

PE

PE/A

PE 55

Peripheral positive displacement pumps with front suction (PE) and side suction with self-priming system (PE A) for small household systems and simple industrial applications; characterised by a considerable ratio between performance and required output.output.

Construction features

Painting	cataphoresis (55)
Pump body	cast iron bronze (50BR)
Motor bracket	cast iron bronze (50BR) aluminum with AISI304 insert (55)
Impeller	brass
Mechanical seal	ceramic-graphite-NBR
Motor shaft	stainless steel AISI 416
Liquid temperature	0 - 90 °C
Operating pressure	max 6 bar (50, 55) max 8 bar (70, 100) max 9 bar (90)

Motor

2 poles induction motor	3~ 220/380V - 60Hz 1~ 220V - 60Hz (with thermal protection)
Insulation class	F
Protection degree	IPX4

PE 50 A T

- pump type: PE 50
- version: A = self-priming; BR = bronze pump body; (standard)
- motor: T = 3~; (1~)

LOTS				
TYPE	TRUCK		CONTAINER	
	PALLET (cm)	N° pumps	PALLET (cm)	N° pumps
PE(T) 50÷55	85×110×170	198	85×110×190	220
	80×120×170	207	80×120×190	230
PE(T) 50A **PE(T) 70A** **PE(T) 100-90**	80×110×170	105	85×110×190	135
			85×120×170	136
PE(T) 70	80×120×140	152	80×120×175	171
	85×100×140	160	85×100×175	180
PE(T) 100A	80×120×145	102	80×120×190	136

1~ 110V - 60Hz	
TYPE	I (A)
PE 50	4,6
PE 100	10,4
PE 90	11,2

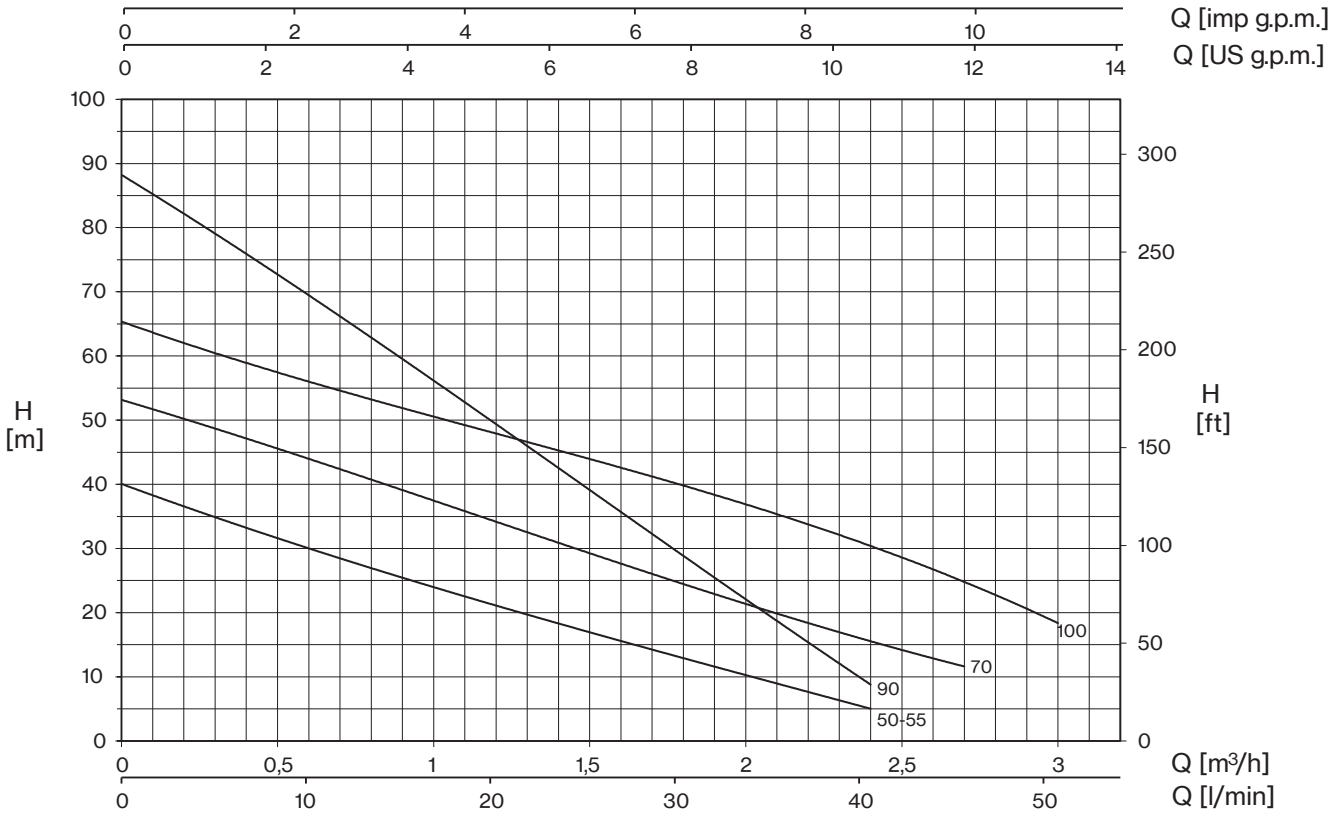

TYPE - 60 Hz		P2		P1		CURRENT		Q (m³/h - l/min)							
1~	3~			1~	3~	1~ 220V	3~ 380V	0	0,3	0,6	1,2	1,8	2,4	2,7	3
								0	5	10	20	30	40	45	50
		HP	kW	kW		A		H (m)							
PE 50F	**PE 50FT**	0,5	0,37	0,5	0,5	2,3	1	40,0	35,0	30,0	21,0	13,0	5,0		
PE 50BR	**PE 50BRT**	0,5	0,37	0,5	0,5	2,3	1	40,0	35,0	30,0	21,0	13,0	5,0		
PE 50A	**PE 50AT**	0,5	0,37	0,5	0,5	2,3	1	40,0	35,0	30,0	21,0	13,0	5,0		
PE 55	**-**	0,5	0,37	0,5	0,5	2,3	1	40,0	35,0	30,0	21,0	13,0	5,0		
PE 70	**PE 70T**	0,7	0,5	0,9	0,9	4	1,7	53,1	48,8	44,1	33,8	24,7	15,5	11,6	
PE 70A	**PE 70AT**	0,7	0,5	0,9	0,9	4	1,7	53,1	48,8	44,1	33,8	24,7	15,5	11,6	
PE 100	**PE 100T**	1	0,74	1,1	1,1	5,2	2	65,0	61,0	56,0	48,0	39,0	31,0	25,1	18,0
PE 100A	**PE 100AT**	1	0,74	1,1	1,1	5,2	2	65,0	61,0	56,0	48,0	39,0	31,0	25,1	18,0
PE 90	**PE 90T**	1	0,74	1,2	1,1	5,6	2	88,2	79,2	69,3	49,5	28,8	8,8		

PE

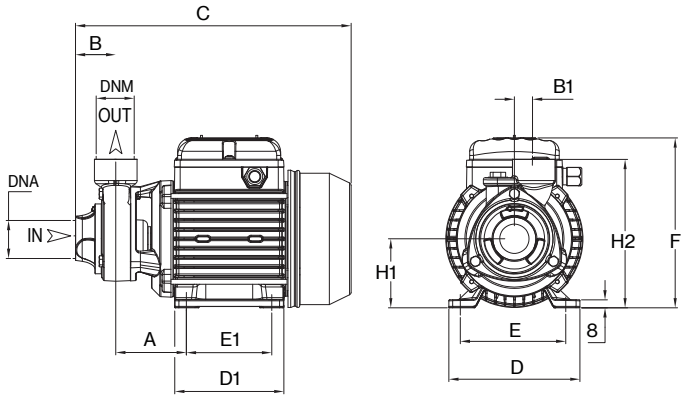

TYPE		DIMENSIONS (mm)																Kg
1~	3~	A	B	B1	C	D	D1	E	E1	F	H1	H2	DNA	DNM	I	L	M	
PE 50F	**PE 50FT**	63	50	20	260	120	101	100	80	158	63	143			265	150	175	6,5
PE 50BR	**PE 50BRT**	63	50	20	260	120	101	100	80	158	63	143			265	150	175	7
PE 70	**PE 70T**	71,5	42	20	256	120	101	100	80	158	63	145	1” G	1” G	285	150	180	8,5
PE 100	**PE 100T**	72,5	41	20	280	135	112	112	89	172	71	152			300	170	195	10,5
PE 90	**PE 90T**	74,5	50	20	286	135	112	112	89	172	71	158			310	185	195	11

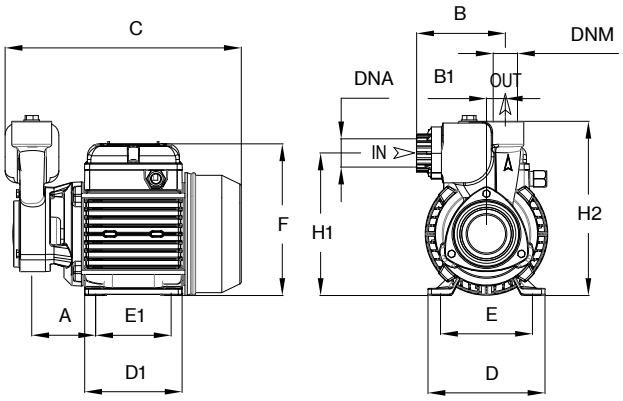

TYPE		DIMENSIONS (mm)																Kg
1~	3~	A	B	B1	C	D	D1	E	E1	F	H1	H2	DNA	DNM	I	L	M	
PE 50A	**PE 50AT**	63	89	20	240	120	101	100	80	158	150	184			300	170	195	7,5
PE 70A	**PE 70AT**	71,5	101	20	248	120	101	100	80	158	157	193	1” G	1” G	300	170	195	9
PE 100	**PE 100T**	72,5	41	20	280	135	112	112	89	172	71	152			300	170	195	10,5
PE 90	**PE 90T**	74,5	50	20	286	135	112	112	89	172	71	158			310	185	195	11

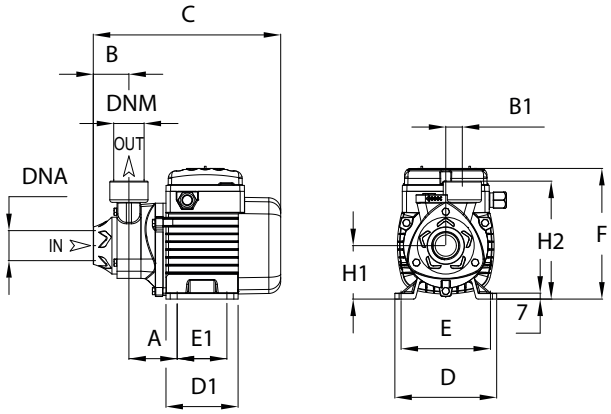

TYPE	DIMENSIONS (mm)																Kg
1~	A	B	B1	C	D	D1	E	E1	F	H1	H2	DNA	DNM	I	L	M	
PE 55	52	42	20	221	120	85	98	67	154	63	139	1” G	1” G	245	150	175	5,5

PL

Peripheral positive displacement pumps with side suction for small household systems and simple industrial applications; characterised by a considerable ratio between performance and required power; frontal brass insert avoiding the risk of blockage.

Construction features

Pump body	cast iron and brass
Motor bracket	cast iron
Impeller	brass
Mechanical seal	ceramic-graphite-NBR
Motor shaft	stainless steel AISI 416
Liquid temperature	0 - 90 °C
Operating pressure	max 8 bar

Motor

2 poles induction motor	3~ 220/380V - 60Hz 1~ 220V - 60Hz (with thermal protection)
Insulation class	F
Protection degree	IPX4

1~ 110V - 60Hz	
TYPE	I (A)
PL 50	4,6
PL 100	10,4

PL 50 T

- motor
  - 1~
  - **T** 3~
- pump type

LOTS				
TYPE	TRUCK		CONTAINER	
	PALLET (cm)	N° pumps	PALLET (cm)	N° pumps
PL(T) 50	85×110×170	207	85×110×190	220
	80×120×170	198	80×120×190	230
PL(T) 100	85×110×170	105	85×110×190	135
			80×120×170	136

PL

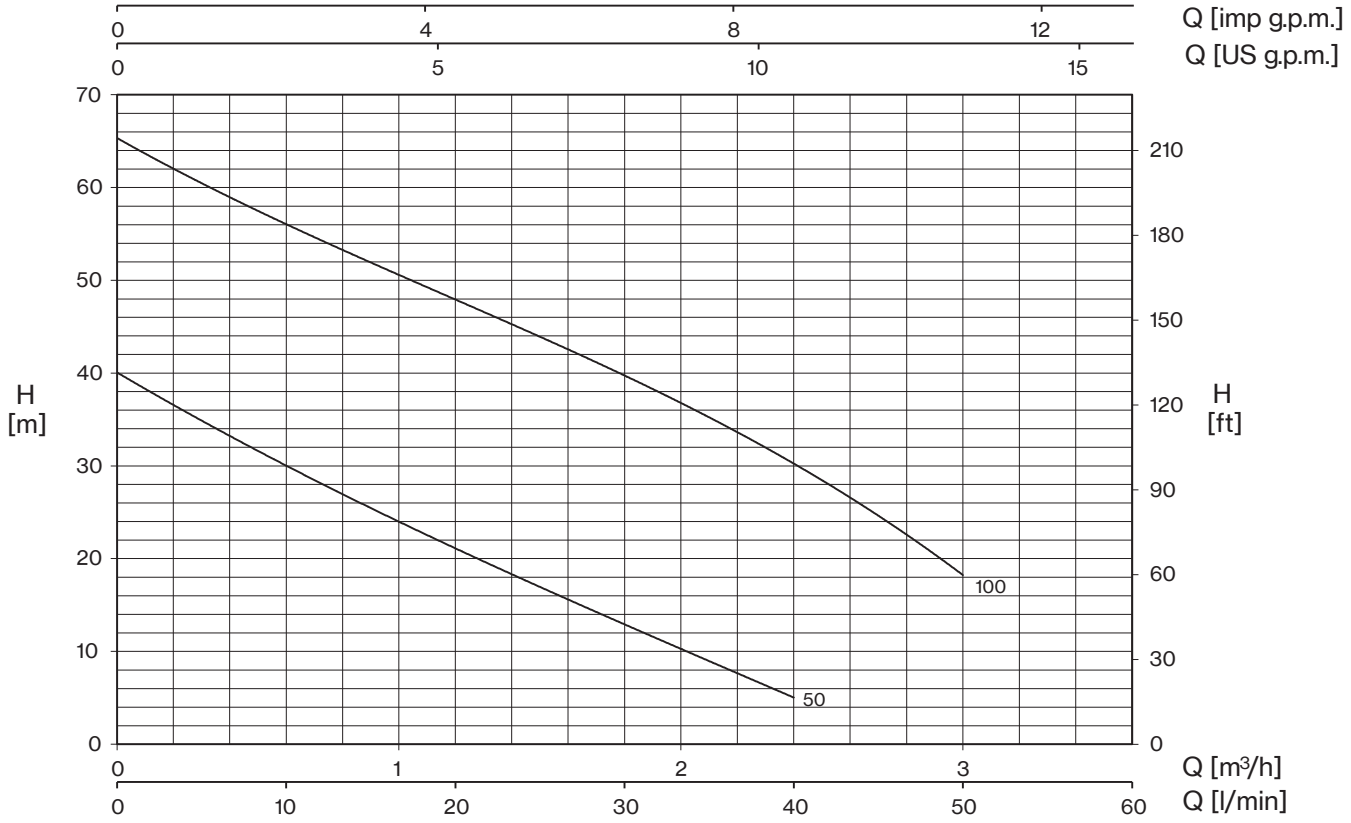

TYPE - 60 Hz		P2		P1		CURRENT		Q (m³/h - l/min)					
1~	3~			1~	3~	1~ 220V	3~ 380V	0,3	0,6	1,2	1,8	2,4	3
								5	10	20	30	40	50
		HP	kW	kW		A		H (m)					
PL 50	**PL 50T**	0,5	0,37	0,5	0,5	2,3	1	35,0	30,0	21,0	13,0	5,0	
PL 100	**PL 100T**	1	0,74	1,11	1,13	5,2	2	61,0	56,0	48,0	39,0	31,0	18,0

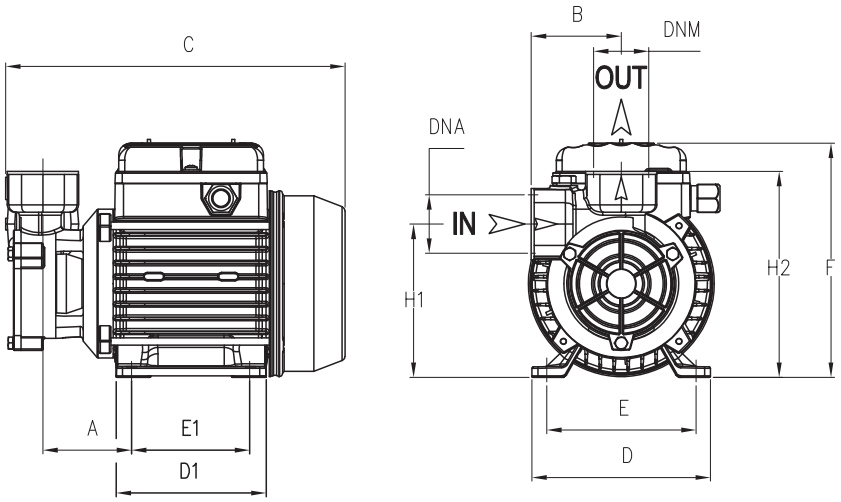

TYPE		DIMENSIONS (mm)															Kg
1~	3~	A	B	C	D	D1	E	E1	F	H1	H2	DNA	DNM	I	L	M	
PL 50	**PL 50T**	67	60	235	120	101	97	80	165	105	140	1" G	1" G	265	145	165	5,7
PL 100	**PL 100T**	71,5	60	263	135	112	112	89	172	124	156			310	185	195	9,2

PC

Volumetric pumps with liquid ring impeller that gives considerable suction power. Particularly suitable for liquid transfer (including volatile liquids). The pumps have a frontal brass cover thus avoiding the risk of blockage.

Construction features

Pump body	cast iron and brass
Motor bracket	cast iron
Impeller	brass
Mechanical seal	ceramic-graphite-NBR
Motor shaft	stainless steel AISI 416
Liquid temperature	0 - 90 °C
Operating pressure	max 8 bar

Motor

2 poles induction motor	3~ 220/380V - 60Hz 1~ 220V - 60Hz (with thermal protection)
Insulation class	F
Protection degree	IPX4

1~ 110V - 60Hz	
TYPE	I (A)
PC 80	10,0
PC 100	10,8

PC 80 T

- motor: 1~ / **T** 3~
- pump type

LOTS				
TYPE	TRUCK		CONTAINER	
	PALLET (cm)	N° pumps	PALLET (cm)	N° pumps
PC(T) 80-100	85×110×170	105	85×110×190	135
			80×120×170	136

PC

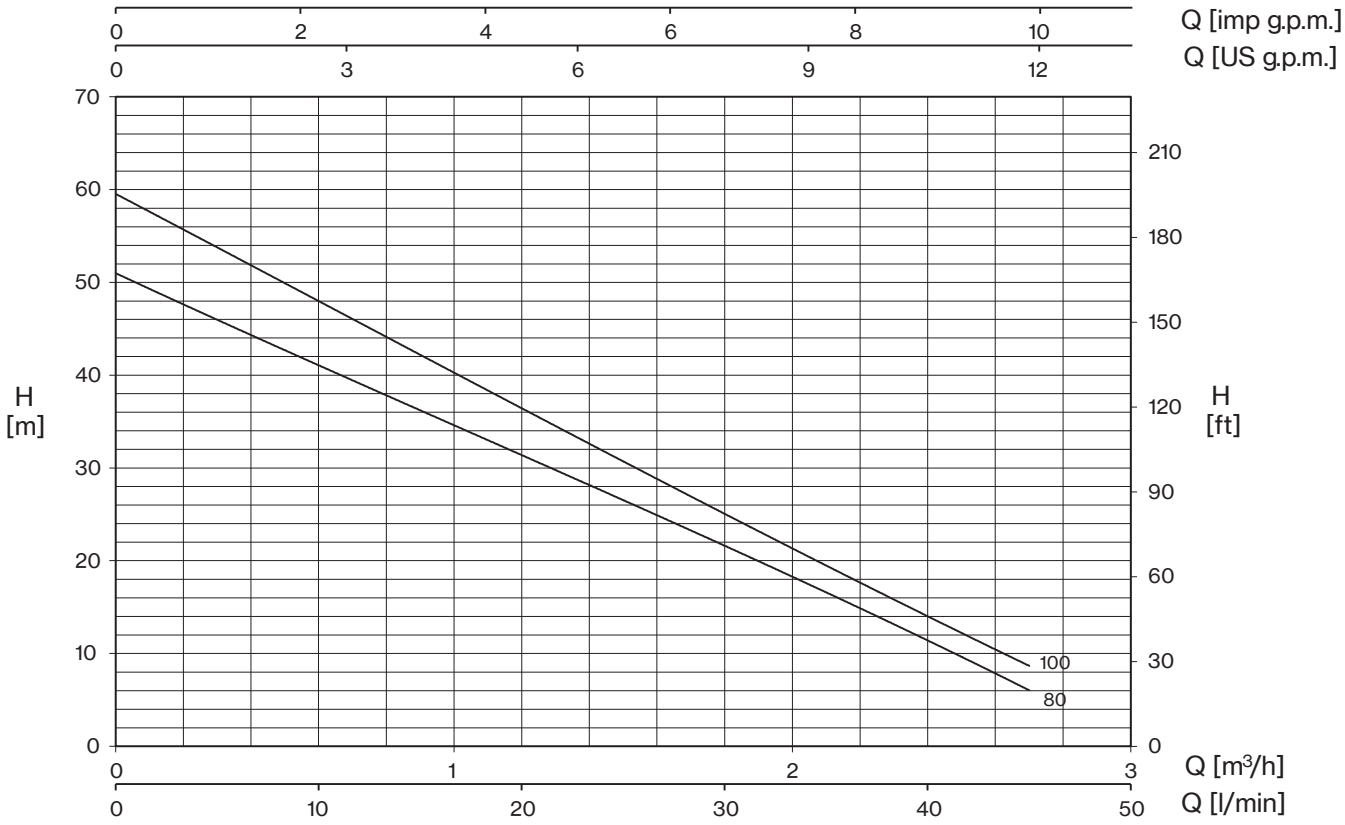

TYPE - 60 Hz		P2		P1		CURRENT		Q (m³/h - l/min)					
1~	3~			1~	3~	1~ 220V	3~ 380V	0,3	0,6	1,2	1,8	2,4	2,7
								5	10	20	30	40	45
		HP	kW	kW		A		H (m)					
PC 80	**PC 80T**	0,8	0,59	1,03	0,94	5	1,7	46,0	41,0	31,5	21,5	11,5	6,0
PC 100	**PC 100T**	1,0	0,74	1,17	0,98	5,4	2,1	53,0	48,0	37,0	25,0	13,5	9,0

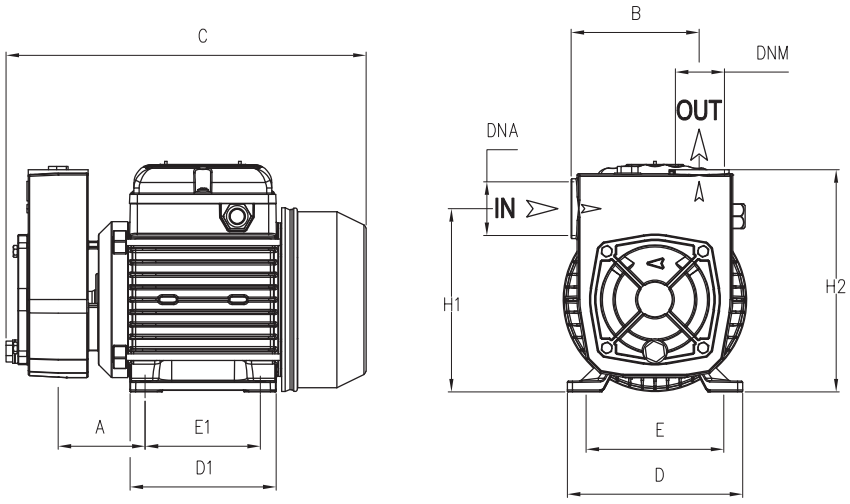

TYPE		DIMENSIONS (mm)														Kg
1~	3~	A	B	C	D	D1	E	E1	H1	H2	DNA	DNM	I	L	M	
PC 80	**PC 80T**	70	98.5	270	135	112	112	89	141	170	1" G	1" G	310	185	195	11,1
PC 100	**PC 100T**	70	98.5	270	135	112	112	89	141	170			310	185	195	11,8

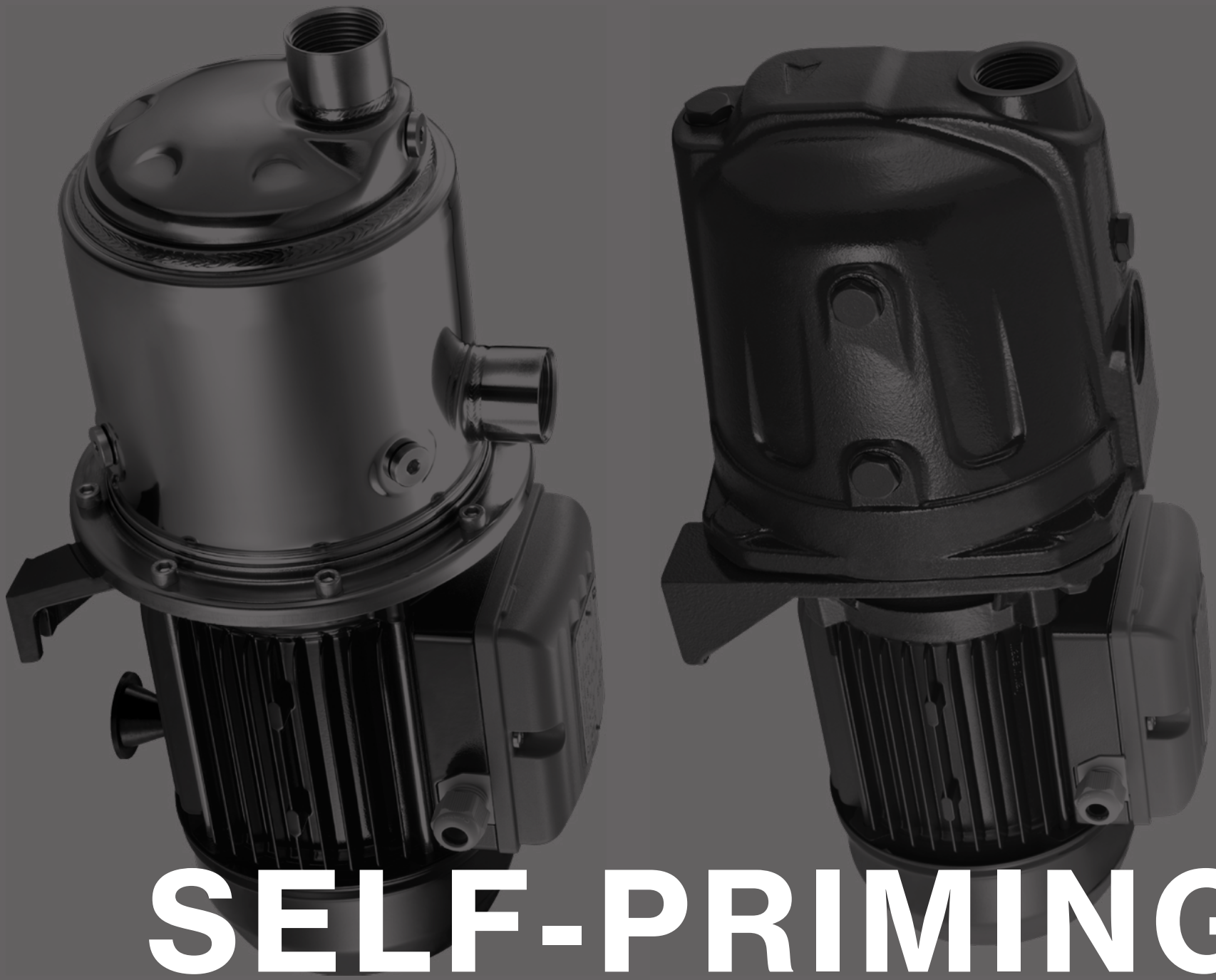

SELF-PRIMING

SELF-PRIMING PUMPS

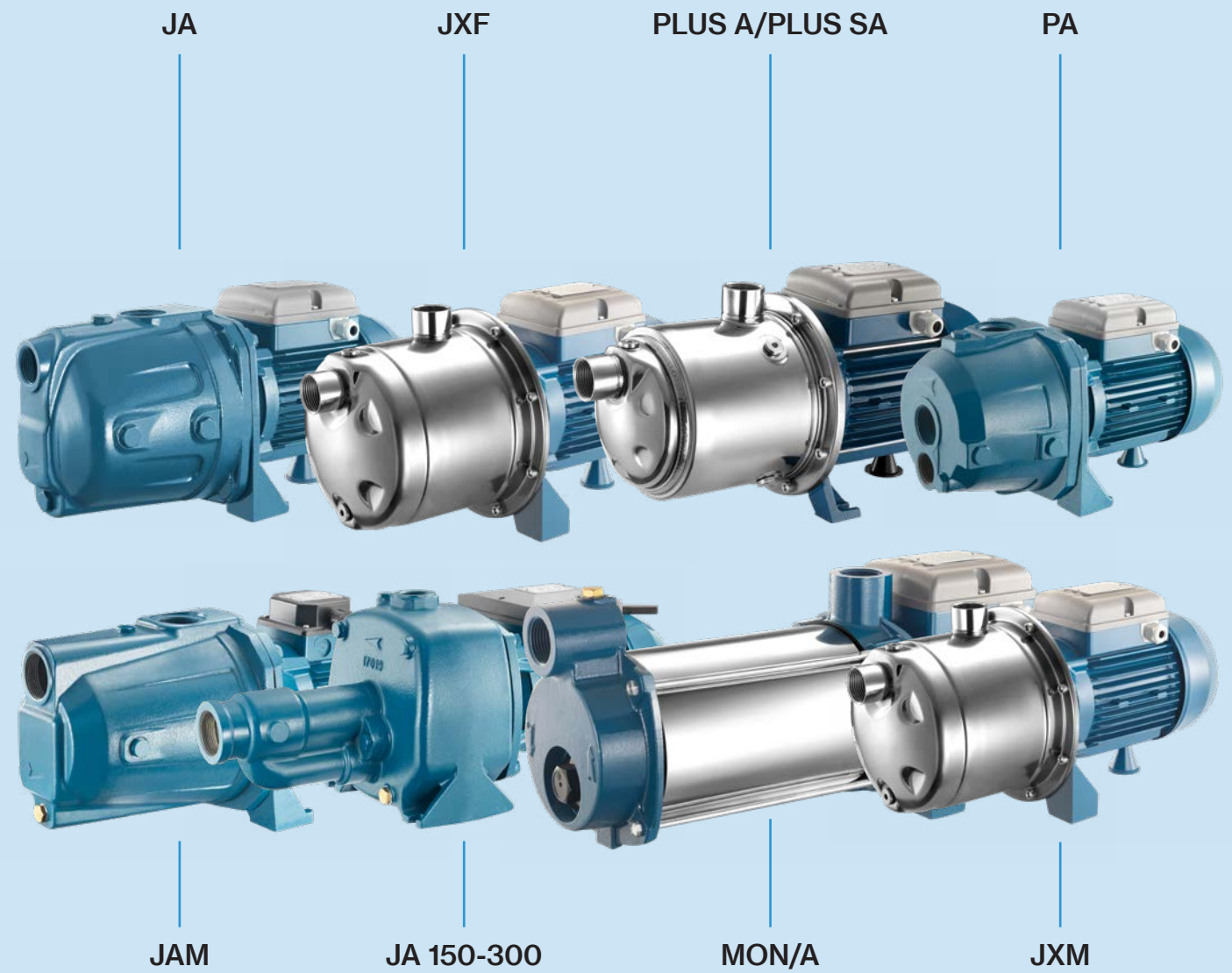

Wide range of single and multistage self-priming pumps, characterized by the fact of being able to handle liquids in the presence of dissolved gases.

Applications:

- Water supply
- Pressurization
- Liquid transfer
- Irrigation and tank emptying
- Small automatic systems of pressure increase

SELF-PRIMING PUMPS

Stainless steel

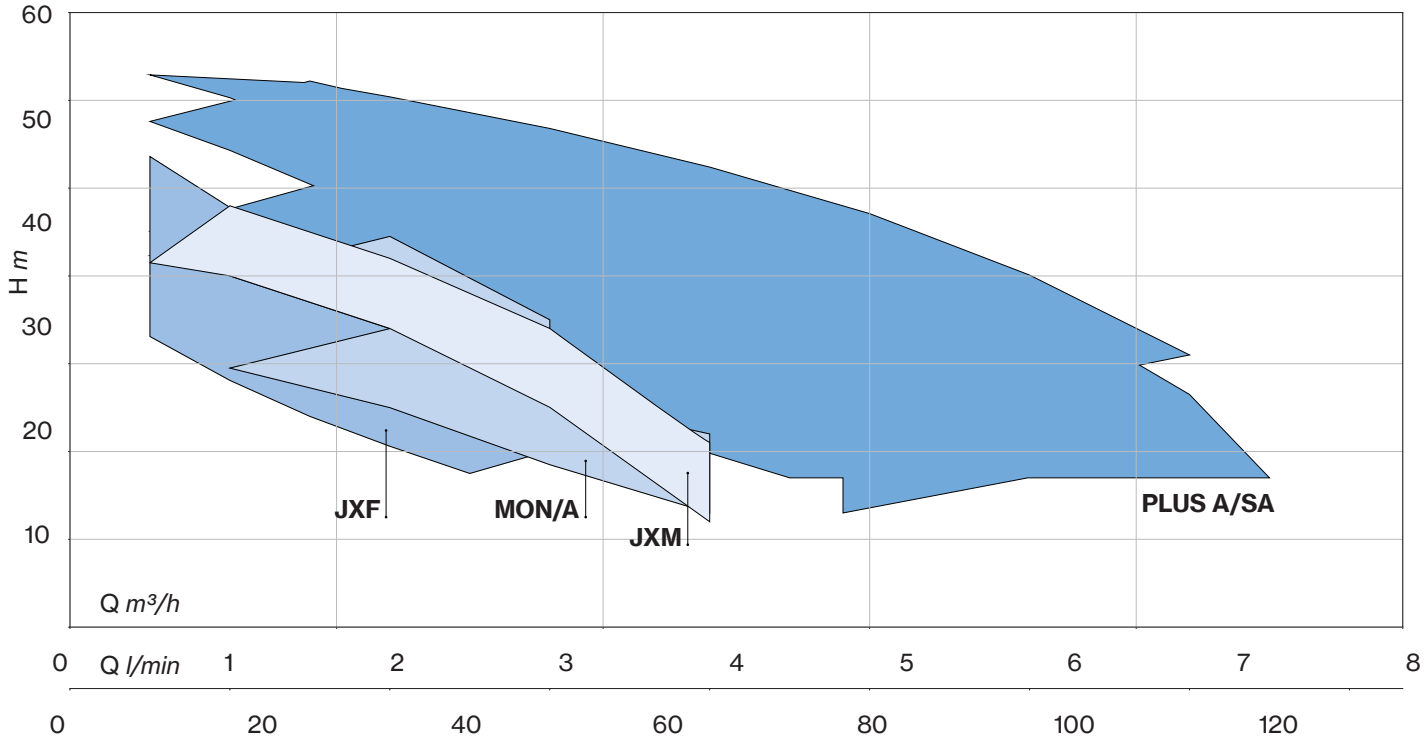

Cast iron

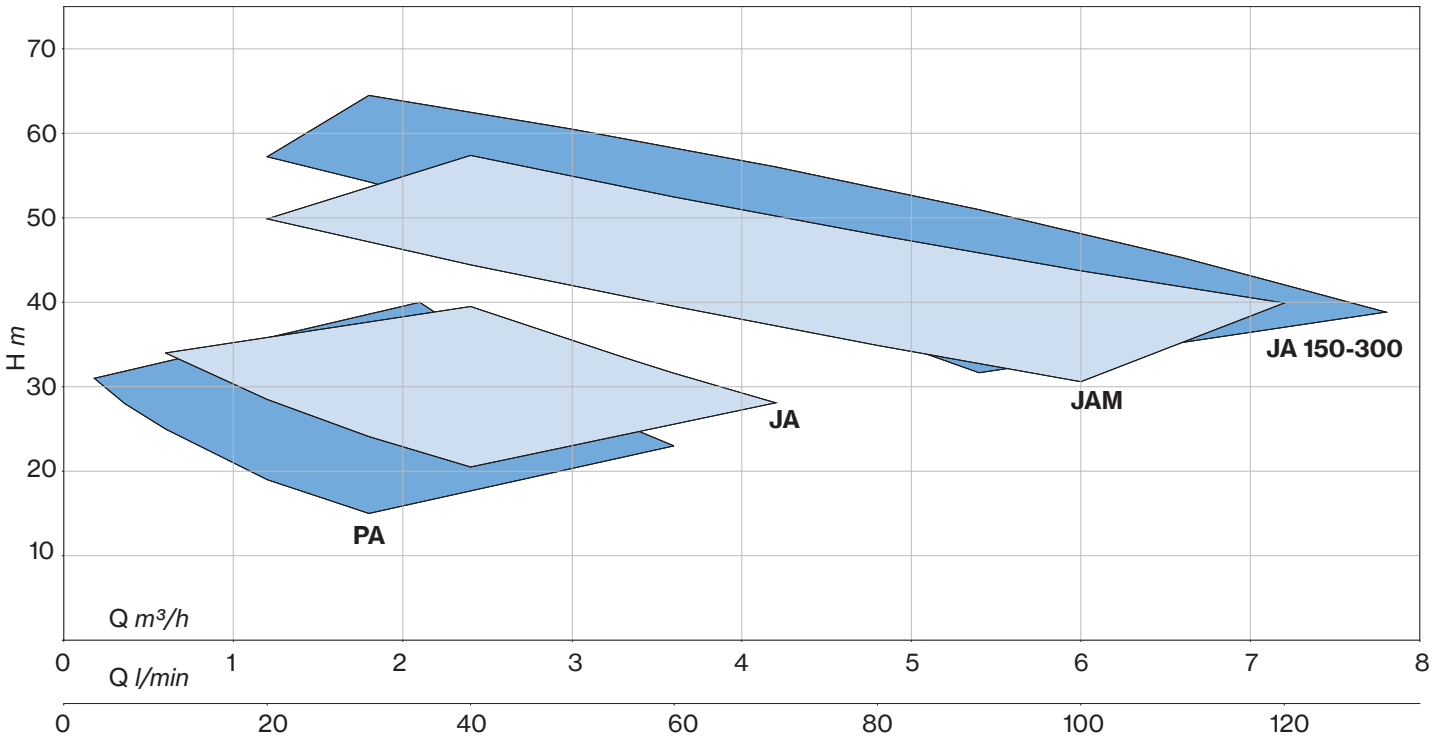

JA

Self-priming

Self-priming centrifugal pump for water supplies (even if mixed with air) in small household systems, connected to autoclave tanks, for transferring liquids and emptying tanks; also used for gardening.

Construction features

Pump body	cast iron
Motor bracket	aluminum
Impeller	Noryl®; brass
Mechanical seal	ceramic-graphite-NBR
Motor shaft	stainless steel AISI 416
Liquid temperature	0 - 50 °C
Operating pressure	max 6 bar (66N-86N) max 7 bar (106N÷146)

Motor

2 poles induction motor	3~ 220/380V - 60Hz 1~ 220V - 60Hz (with thermal protection)
Insulation class	F
Protection degree	IPX4

1~ 110V - 60Hz	
TYPE	I (A)
JA 66N	6,4
JA 86N	7,4
JA 106N	10,2
JA 126	10,8

JA 106N T

- pump type: JA
- motor bracket: 0 cast iron; 6 aluminum (66N÷146)
- impeller: Noryl®; /1 brass
- motor: 1~; T 3~

LOTS				
TYPE	TRUCK		CONTAINER	
	PALLET (cm)	N° pumps	PALLET (cm)	N° pumps
JA 66N÷146(T)	85×110×145	60	85×110×190	80

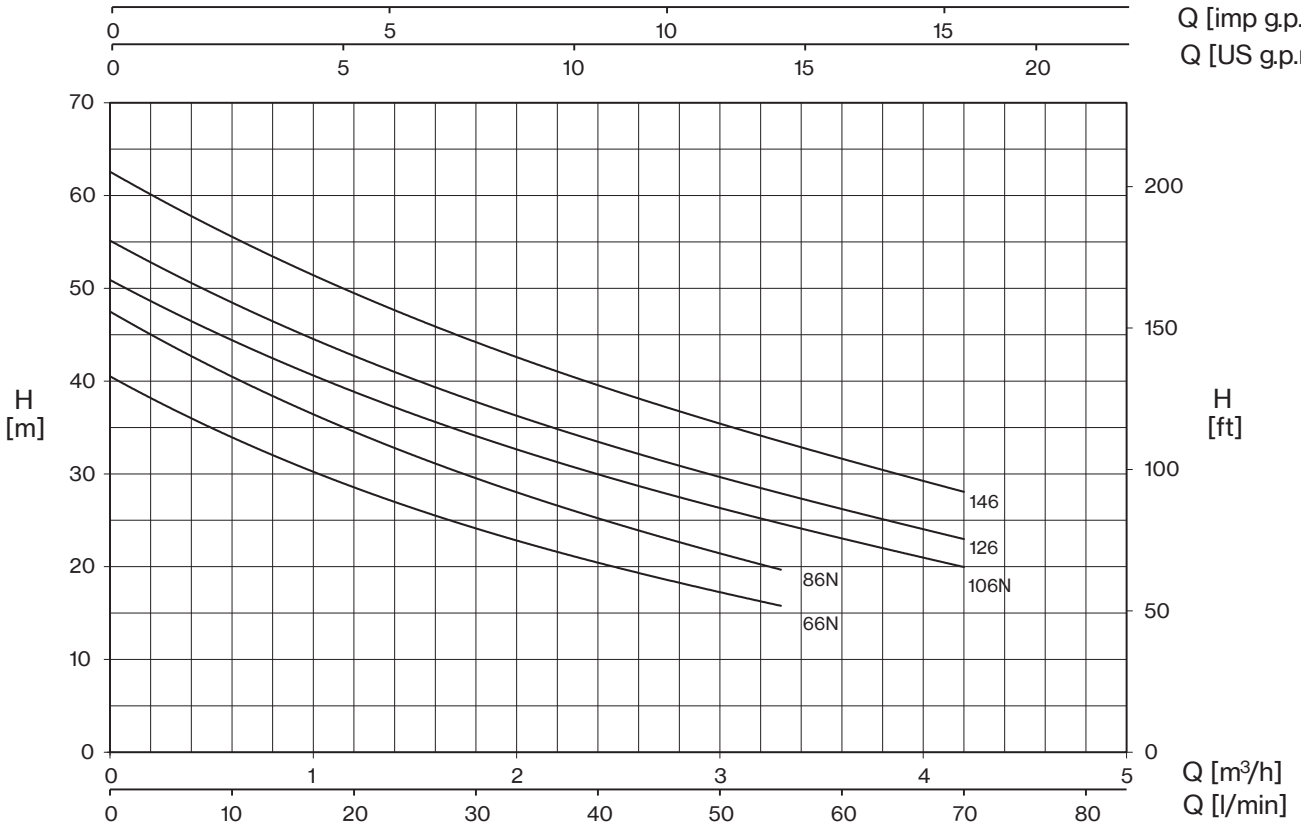

TYPE - 60 Hz		P2		P1		CURRENT		Q (m³/h - l/min)								
1~	3~			1~	3~	1~ 220V	3~ 380V	0	0,6	1,2	1,8	2,4	3	3,3	3,6	4,2
								0	10	20	30	40	50	55	60	70
		HP	kW	kW		A		H (m)								
JA 66N	**JA 66NT**	0,6	0,44	0,7	0,67	3,2	1,4	40,5	34,0	28,5	24,1	20,5	17,2	15,8		
JA 86N	**JA 86NT**	0,8	0,59	0,82	0,78	3,7	1,5	47,5	40,5	34,5	29,6	25,2	21,4	19,7		
JA 106N	**JA 106NT**	1	0,74	1,04	0,92	5,1	1,7	50,9	44,3	38,9	34,1	30,1	26,3	24,6	23,0	20,0
JA 126	**JA 126T**	1,2	0,88	1,14	1,07	5,4	1,9	55,1	48,5	42,6	37,8	33,5	29,7	27,9	26,2	23,0
JA 146	**JA 146T**	1,5	1,1	1,3	1,25	6,6	2,5	62,5	55,7	49,4	44,2	39,5	35,5	33,5	31,6	28,1

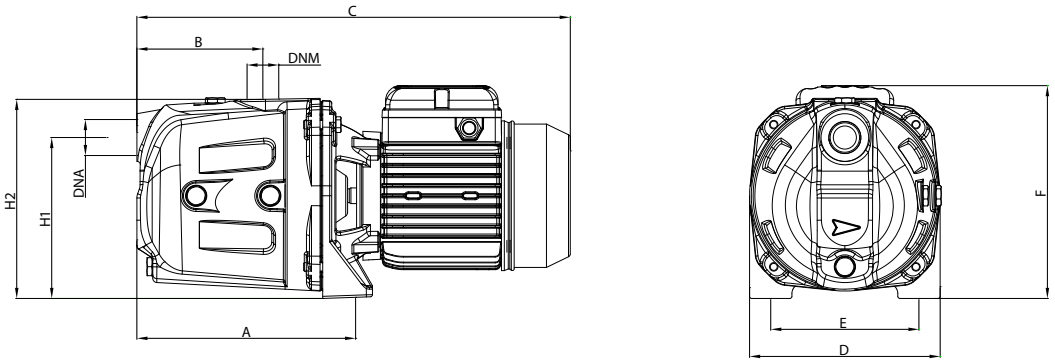

TYPE		DIMENSIONS (mm)										M L I			Kg
1~	3~	A	B	C	D	E	F	H1	H2	DNA	DNM	I	L	M	
JA 66N	**JA 66NT**	214	119	410	180	140	195	150	185			440	194	215	12
JA 86N	**JA 86NT**	214	119	410	180	140	195	150	185			440	194	215	12,5
JA 106N	**JA 106NT**	214	119	410	180	140	195	150	185	1” G	1” G	440	194	215	14
JA 126	**JA 126T**	214	119	410	180	140	195	150	185			440	194	215	14,5
JA 146	**JA 146T**	214	119	410	180	140	195	150	185			440	194	215	15

JA GARDEN

Portable electropumps complete with handle, cable with plug and switch.
The performances depend on adopted pump type.

TYPE - 60 Hz	P2		P1	Pipe		Performance	
1~	HP	kW	kW	Suction	Delivery	Q (l/min)	H (m)
JA 66N GARDEN	0,6	0,44	0,7	1	1	10-55	34,0-15,8
JA 86N GARDEN	0,8	0,59	0,82	1	1	10-55	40,5-19,7
JA 106N GARDEN	1	0,74	1,06	1	1	10-70	44,3-20,0

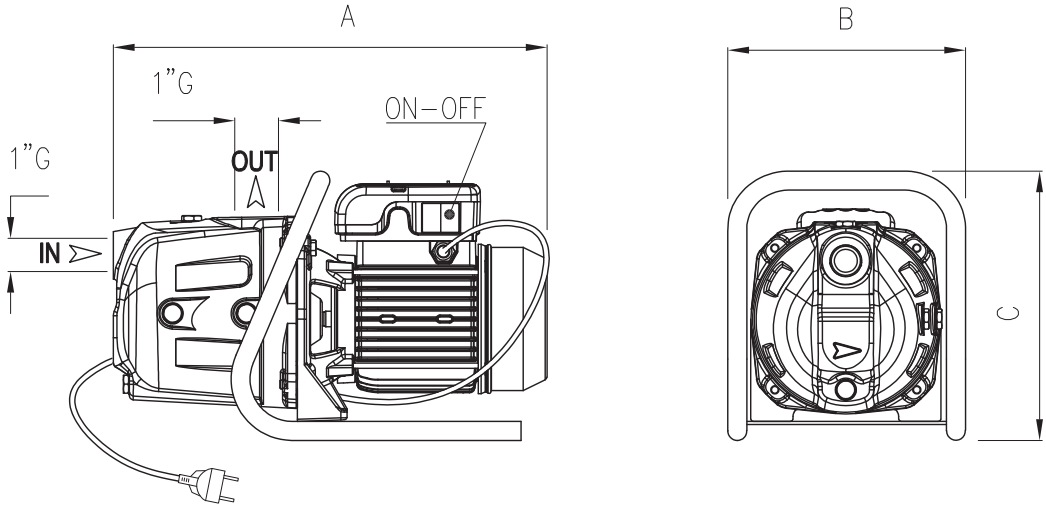

TYPE	DIMENSIONS (mm)		
	A	B	C
JA 66N GARDEN	410	266	252
JA 86N GARDEN	410	266	252
JA 106N GARDEN	410	266	252

JXF

Self-priming

Self-priming centrifugal pumps for domestic applications such as domestic systems where air is mixed with water. Recommended in combination with pressure set for water transfer, rainwater harvesting and garden irrigation systems.

Construction features

Pump body	stainless steel AISI 304
Motor bracket	aluminum
Impeller	Noryl®
Mechanical seal	ceramic-graphite-NBR
Motor shaft	stainless steel AISI 416
Liquid temperature	0 - 50 °C
Operating pressure	max 8 bar

Motor

2 poles induction motor	3~ 220/380V - 60Hz 1~ 220V - 60Hz (with thermal protection)
Insulation class	F
Protection degree	IPX4

1~ 110V - 60Hz	
TYPE	I (A)
JXF 66	6,4
JXF 86	7,0
JXF 106N	9,4
JXF 126	10,4

JXF 106N T

- motor: 1~ / **T** 3~
- motor bracket: **6** aluminum
- pump type

LOTS				
TYPE	TRUCK		CONTAINER	
	PALLET (cm)	N° pumps	PALLET (cm)	N° pumps
JXF(T)	85×110×150	60	85×110×190	80

JXF

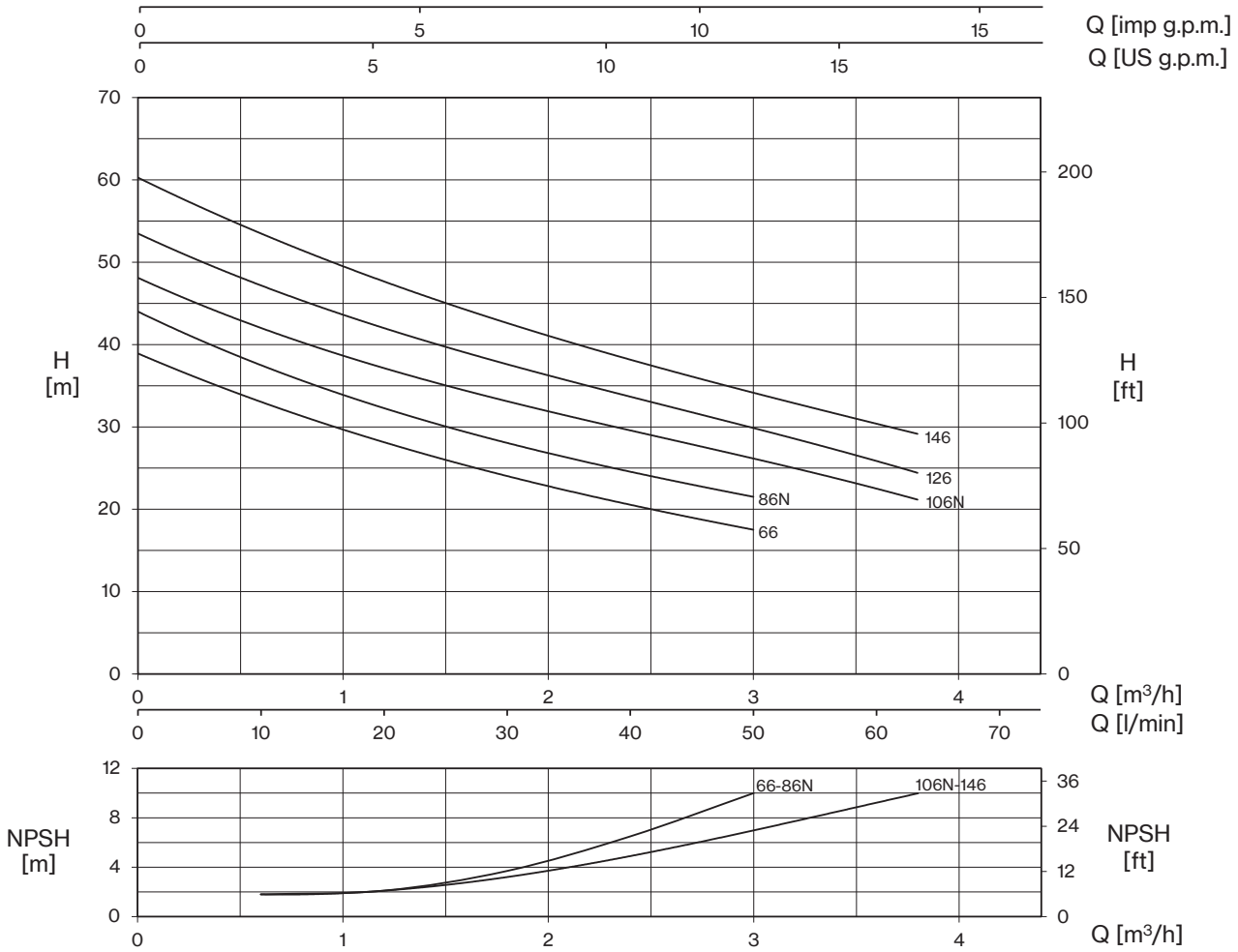

TYPE - 60 Hz		P2		P1		CURRENT		Q (m³/h - l/min)							
1~	3~			1~	3~	1~ 220V	3~ 380V	0	0,6	1,2	1,8	2,4	3	3,6	3,8
								0	10	20	30	40	50	60	63,3
		HP	kW	kW		A		H (m)							
JXF 66	**JXF 66T**	0,6	0,44	0,68	0,63	3,2	1,3	38,9	33,1	28,1	24,0	20,6	17,5		
JXF 86N	**JXF 86NT**	0,8	0,59	0,77	0,76	3,5	1,5	44,0	37,5	32,3	28,0	24,6	21,5		
JXF 106N	**JXF 106NT**	1	0,74	1,04	0,92	4,7	1,7	48,0	42,3	37,0	33,0	29,6	26,2	22,7	21,0
JXF 126	**JXF 126T**	1,2	0,88	1,14	1,03	5,2	1,9	53,4	47,4	41,9	37,5	33,7	29,9	26,0	24,3
JXF 146	**JXF 146T**	1,5	1,1	1,3	1,23	6,0	2,5	60,2	53,6	47,8	42,4	38,0	34,4	30,5	29,0

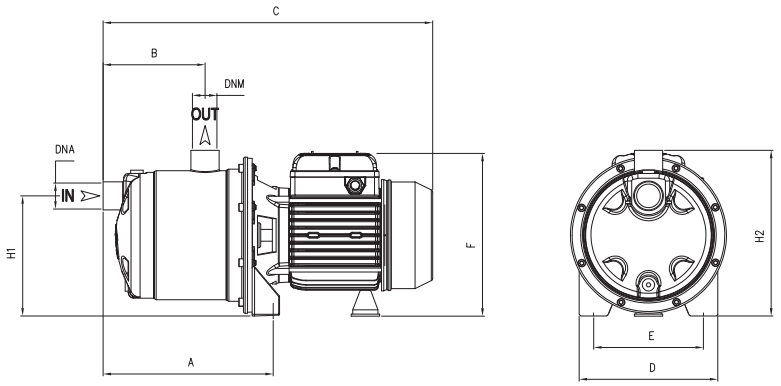

TYPE		DIMENSIONS (mm)													Kg
1~	3~	A	B	C	D	E	F	H1	H2	DNA	DNM	I	L	M	
JXF 66	**JXF 66T**	208	128	410	175	140	215	153	210			430	210	235	8,5
JXF 86N	**JXF 86NT**	208	128	410	175	140	215	153	210			430	210	235	9,5
JXF 106N	**JXF 106NT**	208	128	410	175	140	215	153	210	1" G	1" G	430	210	235	10,5
JXF 126	**JXF 126T**	208	128	410	175	140	215	153	210			430	210	235	11
JXF 146	**JXF 146T**	208	128	410	175	140	215	153	210			430	210	235	11,5

JXF GARDEN-BOX

Portable electropumps complete with handle, cable with plug and switch.
The performances depend on adopted pump type.

JXF GARDEN

JXF BOX

TYPE - 60 Hz	P2		P1	Pipe		Performance	
1~	HP	kW	kW	Suction	Delivery	Q (l/min)	H (m)
JXF 106N GARDEN-BOX	1	0,74	1,04	1	1	10-63,3	42,3-21,0

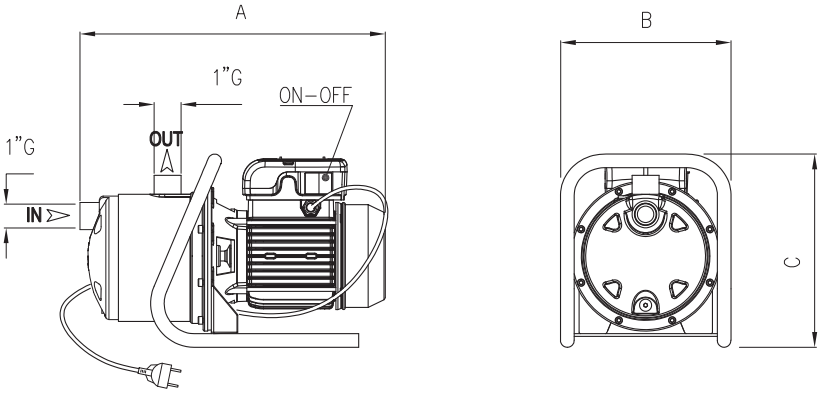

JXF GARDEN

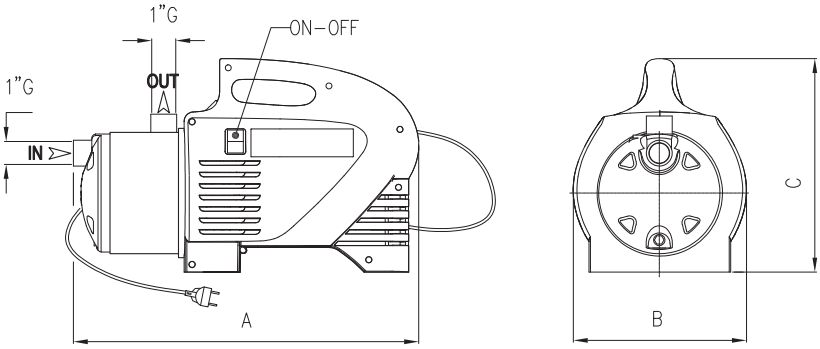

JXF BOX

TYPE	DIMENSIONS (mm)		
	A	B	C
JXF 106N GARDEN	410	175	285
JXF 106N BOX	429	209	287

PLUS A

Self-priming

Self-priming horizontal multistage stainless steel pumps suitable for domestic use, also in combination with autoclave tank. Suitable for drinking water or glycol, for water treatment, heating, air conditioning and washing systems.

Construction features

Pump body, mechanical seal housing	stainless steel AISI 304
Motor bracket	aluminum
Impellers, diffusers	Noryl®
Mechanical seal	ceramic-graphite-EPDM
Motor shaft	stainless steel AISI 303
Liquid temperature	-5 ÷ +35 °C
Operating pressure	max 7 bar

Motor

2 poles induction motor	3~ 220/380V - 60Hz 1~ 220V - 60Hz (with thermal protection up to 1,85 kW)
Insulation class	F
Protection degree	IPX4

P 3 A - 120 / 4 T -WR

- certification
  - standard
  - **-WR** WRAS approved
- motor
  - 1~
  - **T** 3~
- No. of impellers
- self-priming
- nominal flow-rate m³/h
- pump type

WRAS APPROVED PRODUCT
CERTIFICATION MARK

1~ 110V - 60Hz	
TYPE	I (A)
P 3A-80/3	9,8
P 3A-120/4	11,8
P 5A-120/3	13

LOTS				
TYPE	TRUCK		CONTAINER	
	PALLET (cm)	N° pumps	PALLET (cm)	N° pumps
P 3A-80/3(T)	85x110x160	70	85x110x185	80
P 3A-120/4(T)	85x110x160	70	85x110x185	80
P 5A-120/3(T)	85x110x160	70	85x110x185	80
P 5A-180/4(T)	90x110x150	48	90x110x120	56

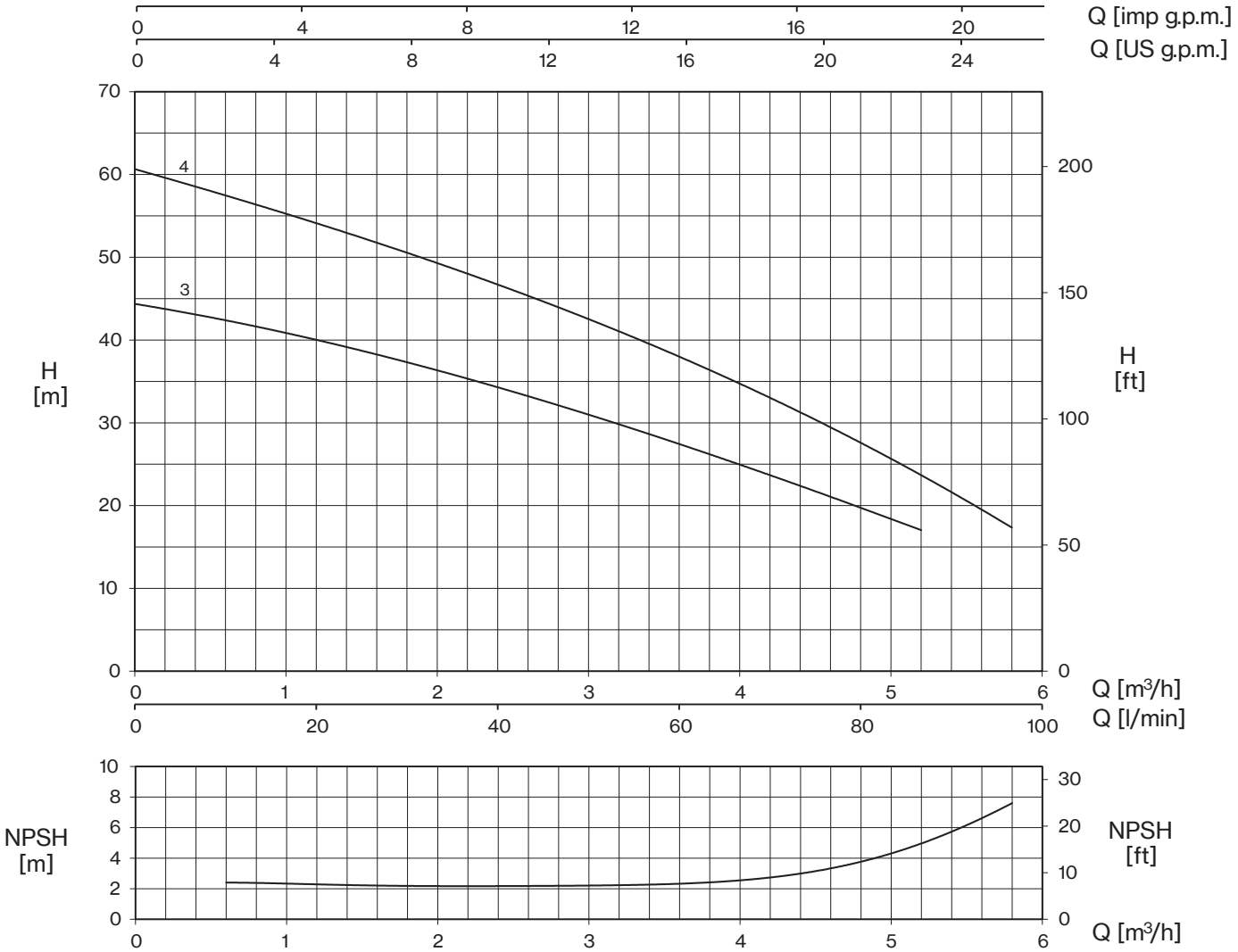

TYPE - 60 Hz		P2		P1		CURRENT		Q (m³/h - l/min)							
1~	3~			1~	3~	1~ 220V	3~ 380V	0	0,6	1,2	2,4	3,6	4,8	5,4	5,8
								0	10	20	40	60	80	90	100
		HP	kW	kW		A		H (m)							
P 3A-80/3	**P 3A-80/3T**	0,8	0,6	1	0,9	4,9	1,7	44,4	42,3	40,1	34,3	27,4	19,8	17,0	
P 3A-120/4	**P 3A-120/4T**	1,2	0,9	1,25	1,2	5,9	2,5	60,5	57,6	54,3	46,6	37,7	27,8	22,0	17,0

PLUS 5A

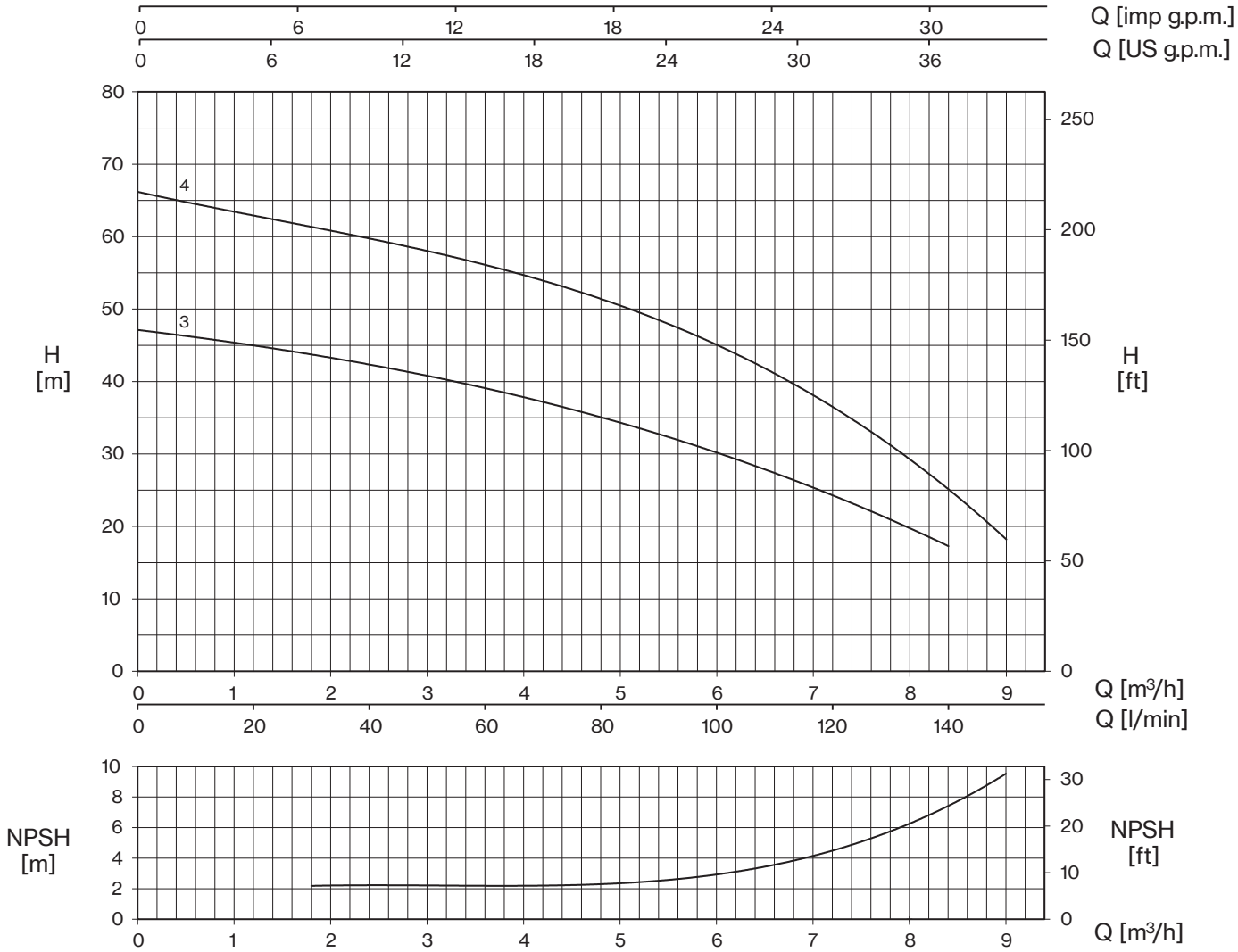

TYPE - 60 Hz		P2		P1		CURRENT		Q (m³/h - l/min)								
1~	3~			1~	3~	1~ 220V	3~ 380V	0	1,8	2,4	3,6	4,8	6	7,2	8,4	9
								0	30	40	60	80	100	120	140	150
		HP	kW	kW		A		H (m)								
P 5A-120/3	**P 5A-120/3T**	1,2	0,9	1,4	1,35	6,5	2,7	47,0	44,0	42,5	38,9	34,7	30,1	24,9	17,0	
P 5A-180/4	**P 5A-180/4T**	1,8	1,3	1,9	1,75	9	3,3	65,8	62,2	60,1	55,7	50,6	44,6	37,2	26,5	17,0

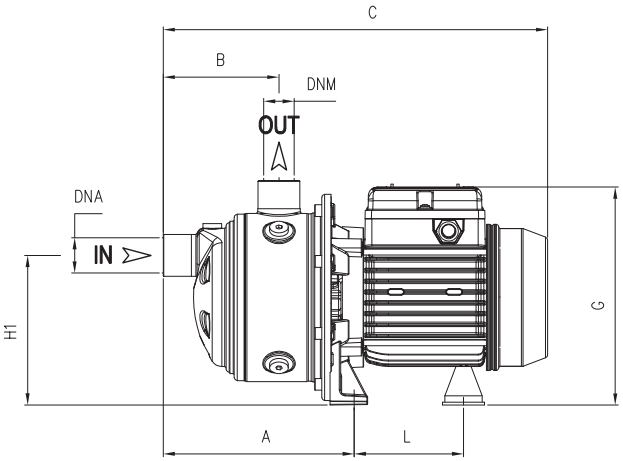

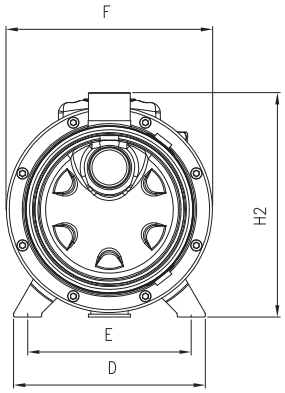

TYPE		DIMENSIONS (mm)												Kg
1~	3~	A	B	C	D	E	F	G	L	H1	H2	DNA	DNM	
P 3A-80/3	**P 3A-80/3T**	214,8	151	404	164	140	176	203	104,7	128	192	1” G	1” G	10
P 3A-120/4	**P 3A-120/4T**	238,8	175	428	164	140	176	203	104,7	128	192			11,5
P 5A-120/3	**P 5A-120/3T**	214,8	151	404	164	140	176	203	104,7	128	192			11
P 5A-180/4	**P 5A-180/4T**	238,8	175	489	164	140	176	217	128,2	134	198			14,5

PLUS SA

Self-priming

Self-priming horizontal multistage stainless steel pumps suitable for domestic use, also in combination with autoclave tank. Suitable for drinking water or glycol, for water treatment, heating, air conditioning and washing systems.

Construction features

Pump body, mechanical seal housing	stainless steel AISI 304
Motor bracket	aluminum
Impellers, diffusers	stainless steel AISI 304
Mechanical seal	ceramic-graphite-EPDM
Motor shaft	stainless steel AISI 303
Liquid temperature	-15 ÷ +110 °C
Operating pressure	max 7 bar

Motor

2 poles induction motor	3~ 220/380V - 60Hz 1~ 220V - 60Hz (with thermal protection up to 1,85 kW)
Insulation class	F
Protection degree	IPX4

WRAS APPROVED PRODUCT
CERTIFICATION MARK

P 3 S A - 120 / 4 T -WR

- pump type: P
- nominal flow-rate m³/h: 3
- stainless steel impellers and diffusers: S
- self-priming: A
- No. of impellers: 4
- motor: T (3~); blank = 1~
- certification: -WR = WRAS approved; blank = standard

1~ 110V - 60Hz	
TYPE	I (A)
P 3SA-80/3	9,8
P 3SA-120/4	11,8
P 5SA-120/3	13

LOTS				
TYPE	TRUCK		CONTAINER	
	PALLET (cm)	N° pumps	PALLET (cm)	N° pumps
P 3SA-80/3(T)	85x110x160	70	85x110x185	80
P 3SA-120/4(T)	85x110x160	70	85x110x185	80
P 5SA-120/3(T)	85x110x160	70	85x110x185	80
P 5SA-180/4(T)	90x110x150	48	90x110x120	56

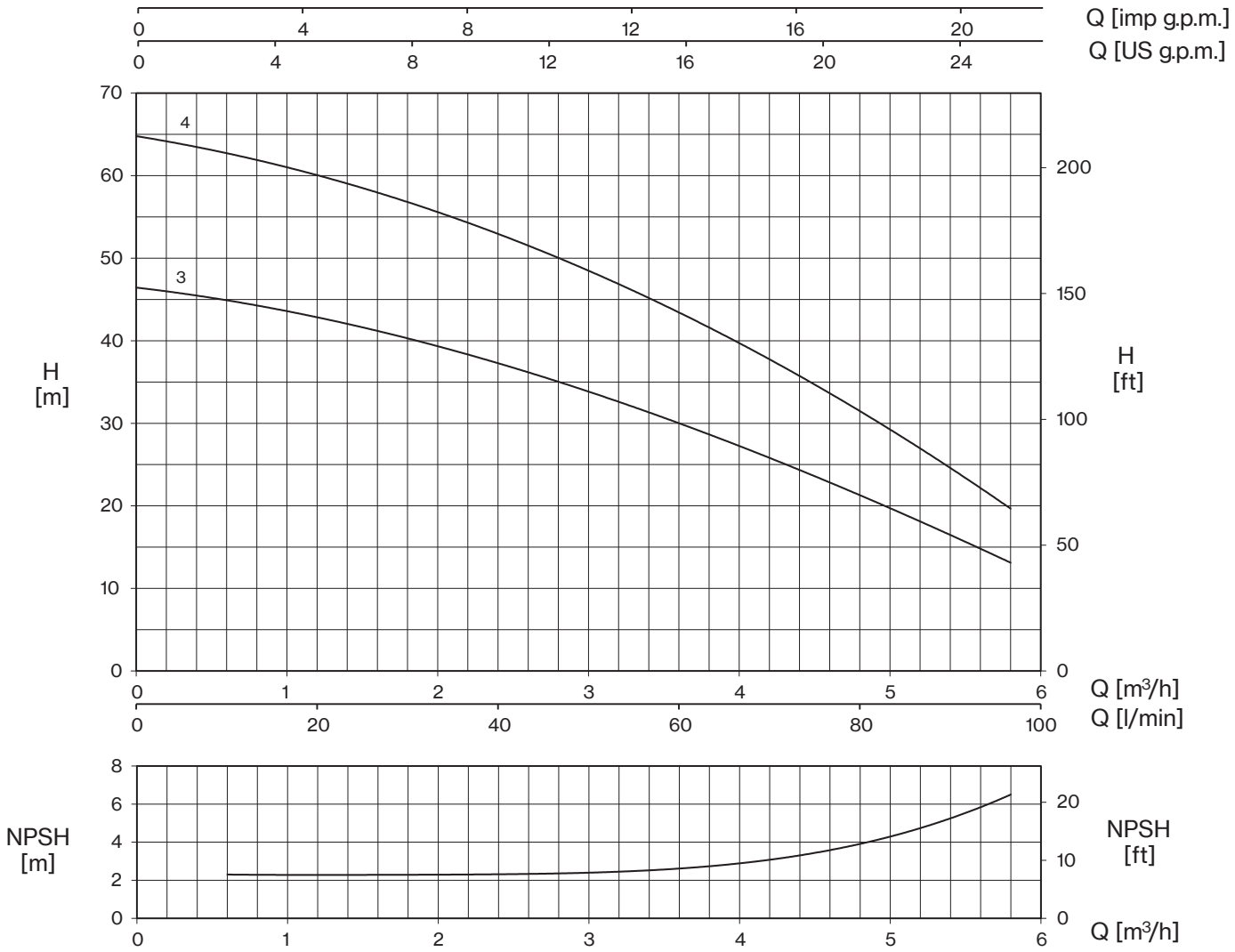

TYPE - 60 Hz		P2		P1		CURRENT		Q (m³/h - l/min)						
1~	3~			1~	3~	1~ 220V	3~ 380V	0	0,6	1,2	2,4	3,6	4,8	5,8
								0	10	20	40	60	80	96,7
		HP	kW	kW		A		H (m)						
P 3SA-80/3	**P 3SA-80/3T**	0,8	0,6	1	0,9	4,9	1,7	46,3	45,1	42,9	37,2	29,8	21,6	13,0
P 3SA-120/4	**P 3SA-120/4T**	1,2	0,9	1,25	1,2	5,9	2,5	64,6	62,9	60,3	52,7	43,2	31,9	19,5

PLUS 5SA

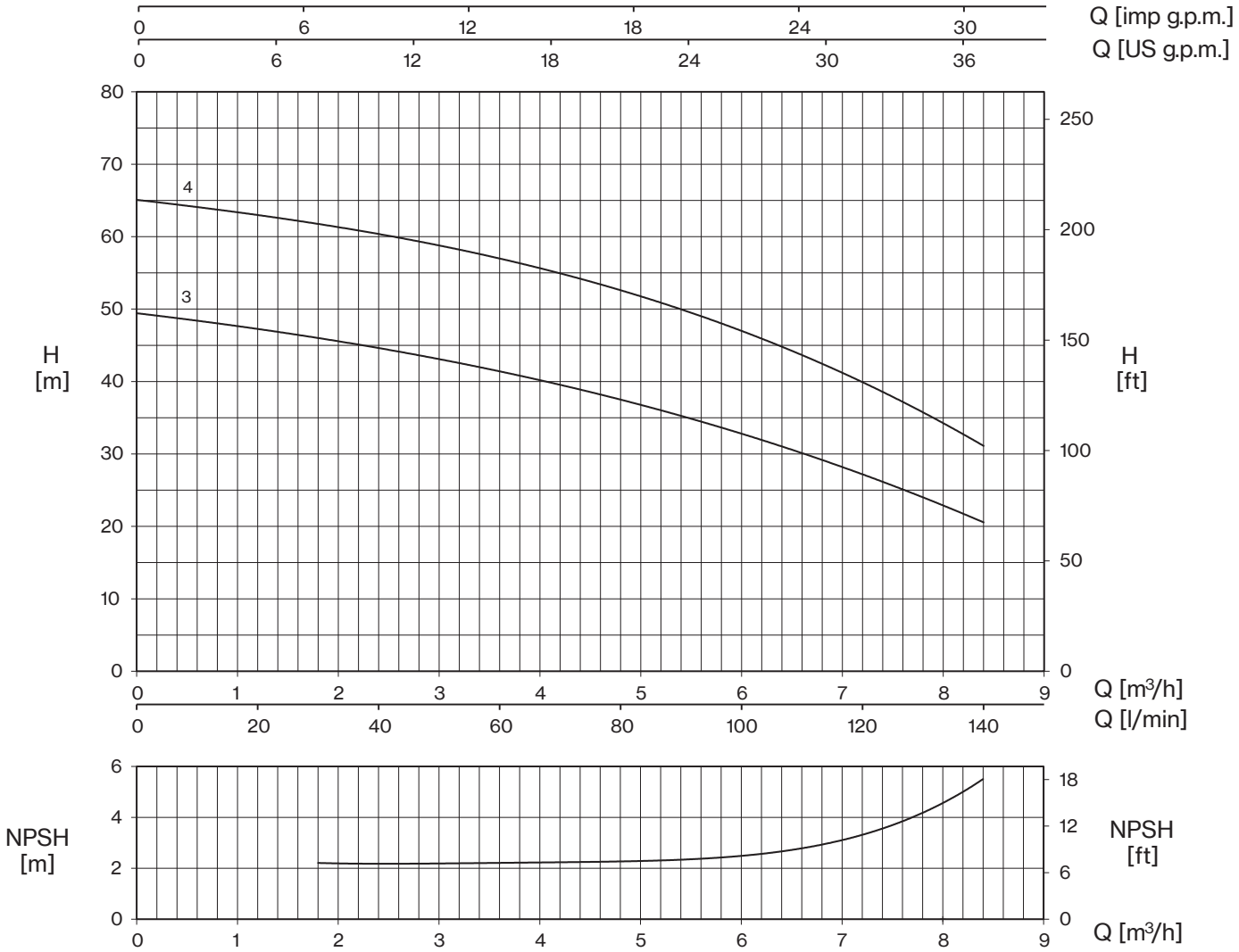

TYPE - 60 Hz		P2		P1		CURRENT		Q (m³/h - l/min)							
1~	3~			1~	3~	1~ 220V	3~ 380V	0	1,8	2,4	3,6	4,8	6	7,2	8,4
								0	30	40	60	80	100	120	140
		HP	kW	kW		A		H (m)							
P 5SA-120/3	**P 5SA-120/3T**	1,2	0,9	1,4	1,35	6,5	2,7	49,4	46,1	44,6	41,4	37,4	32,8	27,3	20,5
P 5SA-180/4	**P 5SA-180/4T**	1,8	1,3	1,9	1,75	9	3,3	65,0	62,0	60,4	56,8	52,4	47,1	40,1	31,0

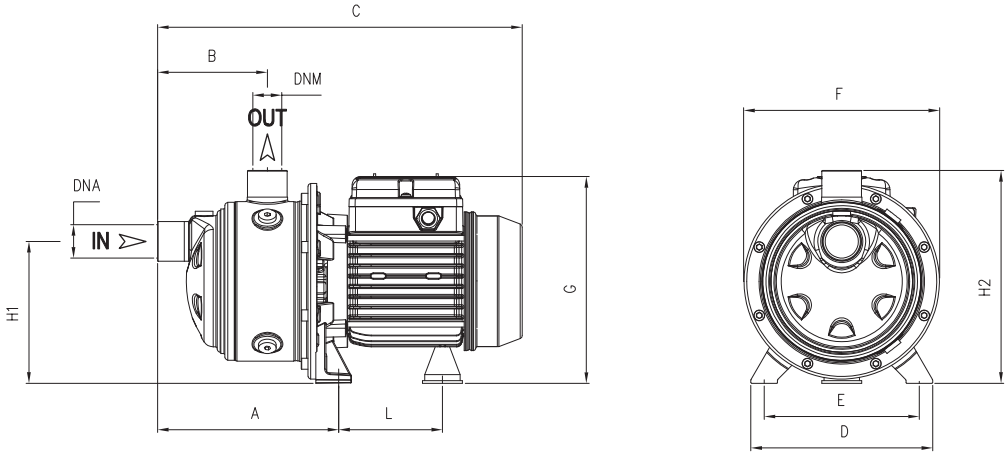

TYPE		DIMENSIONS (mm)												Kg
1~	3~	A	B	C	D	E	F	G	L	H1	H2	DNA	DNM	
P 3SA-80/3	**P 3SA-80/3T**	214,8	151	404	164	140	176	203	104,7	128	192	1” G	1” G	11
P 3SA-120/4	**P 3SA-120/4T**	238,8	175	428	164	140	176	203	104,7	128	192			12,5
P 5SA-120/3	**P 5SA-120/3T**	214,8	151	404	164	140	176	203	104,7	128	192			12
P 5SA-180/4	**P 5SA-180/4T**	238,8	175	489	164	140	176	217	128,2	134	198			16

PA

Self-priming

PA 86÷106

PA 150÷200

4”

Self-priming centrifugal pumps with 4” external ejector. Suitable for water supply (even if mixed with air) of small domestic systems, that can be connected to an autoclave tank.

Construction features	
Pump body	cast iron
Motor bracket	aluminum (86-106), cast iron (150-200)
Impeller	Noryl® or brass
Mechanical seal	ceramic-graphite-NBR
Motor shaft	stainless steel AISI 416 (86-106), AISI 303 hydraulic side (150-200)
Liquid temperature	0 - 50 °C
Operating pressure	max 8 bar

Motor	
2 poles induction motor	3~ 220/380V - 60Hz 1~ 220V - 60Hz (with thermal protection)
Insulation class	F
Protection degree	IPX4

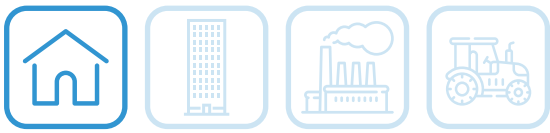

PA 106-4" /1 T

- motor: 1~ / **T** 3~
- impeller: Noryl® / **/1** brass
- external ejector **4"** well casing
- motor bracket: **0** cast iron (150-200) / **6** aluminum (86-106)
- pump type

1~ 110V - 60Hz	
TYPE	I (A)
PA 86	7,4
PA 106	9,4

LOTS				
TYPE	TRUCK		CONTAINER	
	PALLET (cm)	N° pumps	PALLET (cm)	N° pumps
PA 86÷106(T)	85×110×145	60	85×110×190	80
PA 150÷200(T)	80×120×140	35	80×120×190	49

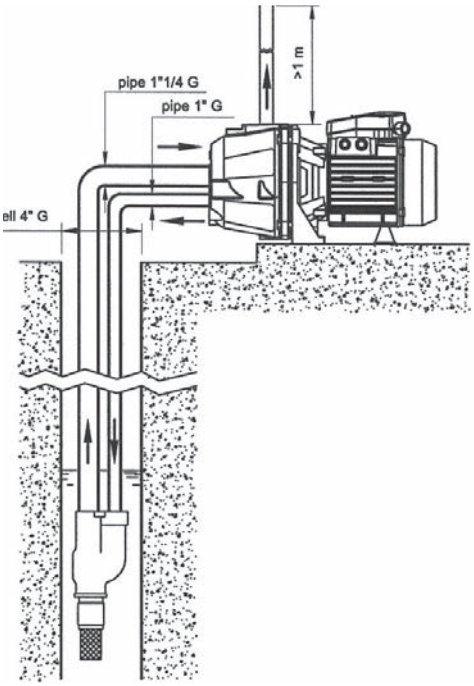

TYPE - 60 Hz		P2		P1		CURRENT		Ejector type	Suction depth. m	Q (m³/h - l/min)									
1~	3~			1~	3~	1~ 220V	3~ 380V			0,18	0,36	0,6	0,9	1,2	1,5	1,8	2,1	3	3,6
										3	6	10	15	20	25	30	35	50	60
		HP	kW	kW		A													
PA 86	**PA 86T**	0,8	0,59	0,8	0,81	3,7	1,4	P 20	15	31	28	25	22	19	17	15	12		
									20	28	23	18	15	13	11				
								P 30	25	22	16	11	8						
									30	14	8								
PA 106	**PA 106T**	1	0,74	1,02	1,05	4,7	2,3	P 20	15	40	37	34	30	27	24	21	18		
									20	37	34	30	25	21	17				
									25	30	25	20	14	11					
								P 30	30	14	8								
									35	12	4								
PA 150	**PA 150T**	2	1,5	1,8	1,7	8,6	3,6	P 20	15							42	35	25	21
									20						50	37	30	21	
									25						45	34	27		
									35				49	41	20				
								P 30	40			48	40						
									50		49	43	20						
PA 200	**PA 200T**	2,5	1,85	2,3	2,2	10,5	4,4	P 20	15								46	35	30
									20							48	43	32	27
									25						50	44	40	28	23
									35							28	20		
								P 30	40				46	30					
									50			49	40						

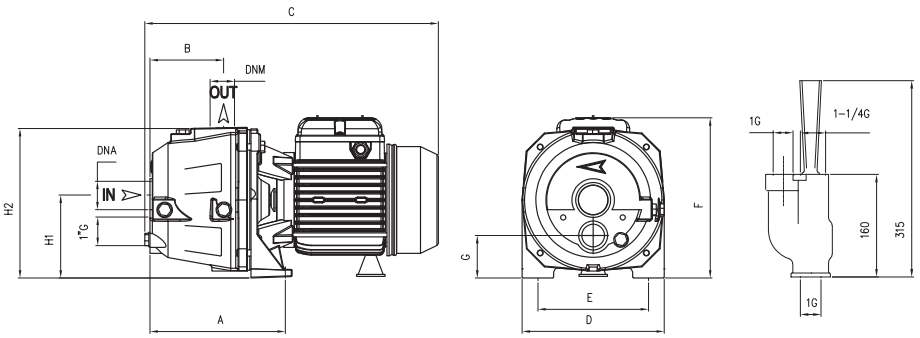

TYPE		DIMENSIONS (mm)														Kg
1~	3~	A	B	C	D	E	F	G	H1	H2	DNA	DNM	I	L	M	
PA 86	**PA 86T**	168	82	360	180	140	195	52	97	188	1" ¼ G	1" G	440	200	225	16
PA 106	**PA 106T**	168	82	360	180	140	195	52	97	188			440	200	225	18
PA 150	**PA 150T**	125	74	415	220	177	230	60	112	240			525	230	280	28,5
PA 200	**PA 200T**	125	74	415	220	177	230	60	112	240			525	230	280	29

JAM

Self-priming

Self-priming centrifugal pumps for water supply (even if mixed with air) connected to autoclave tanks. Suitable for domestic installations, liquid transfer and tank emptying; also used for garden irrigation.

Construction features	
Pump body	cast iron
Motor bracket	cast iron
Impeller	Noryl® or brass
Mechanical seal	ceramic-graphite-NBR
Motor shaft	stainless steel AISI 416
Liquid temperature	0 - 50 °C
Operating pressure	max 8 bar

Motor	
2 poles induction motor	3~ 220/380V - 60Hz 1~ 220V - 60Hz (with thermal protection)
Insulation class	F
Protection degree	IPX4

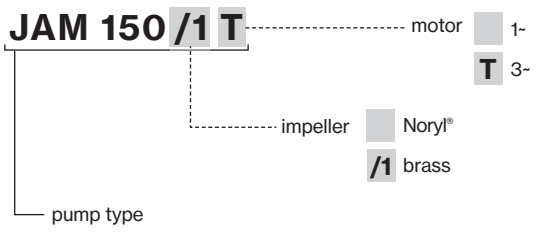

LOTS				
TYPE	TRUCK		CONTAINER	
	PALLET (cm)	N° pumps	PALLET (cm)	N° pumps
JAM 150÷200(T)	80×120×140	25	80×120×180	35
JAM 300	85×110×145	20	85×110×170	24
JAM 300T	80×120×140	25	80×120×180	35

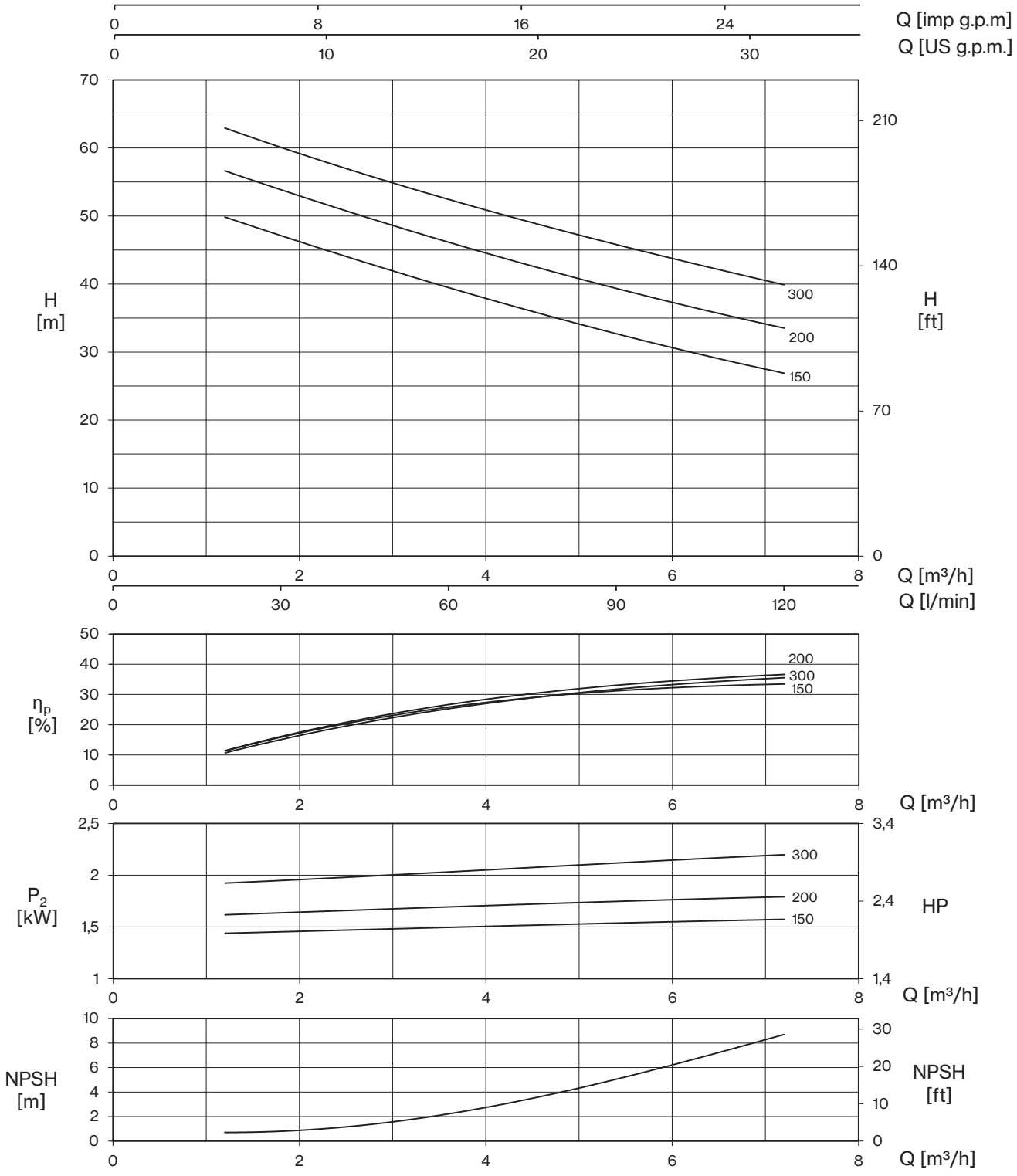

TYPE - 60 Hz		P2		P1		CURRENT		Q (m³/h - l/min)						
1~	3~			1~	3~	1~ 220V	3~ 380V	0	1,2	2,4	3,6	4,8	6	7,2
								0	20	40	60	80	100	120
		HP	kW	kW		A		H (m)						
JAM 150	**JAM 150T**	2	1,5	1,9	1,8	8,9	3,8	55,8	49,9	44,4	39,5	34,9	30,6	26,9
JAM 200	**JAM 200T**	2,5	1,84	2,2	2,1	10,4	4,3	62,4	56,7	51,2	46,2	41,6	37,3	33,5
JAM 300	**JAM 300T**	3	2,2	2,7	2,5	14,1	5,1	68,9	62,9	57,4	52,5	48,0	43,7	39,9

JAM

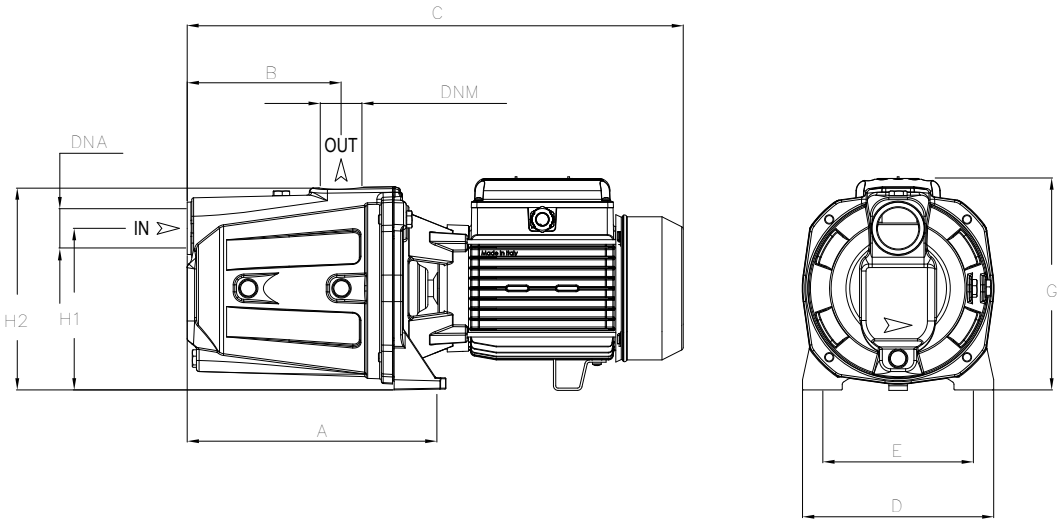

TYPE		DIMENSIONS (mm)													Kg	
1~	3~	A	B	C	D	E	G	H1	H2	DNA	DNM	I	L	M	~1	~3
JAM 150	**JAM 150T**	269,6	167	538	203	165	231,5	175	220	1" ½ G	1" ¼ G	565	235	232	29	30,5
JAM 200	**JAM 200T**	269,6	167	538	203	165	231,5	175	220			565	235	232	30	29,5
JAM 300	**-**	269,6	167	608	203	165	231,5	175	220			638	230	255	37,5	-
-	**JAM 300T**	269,6	167	538	203	165	231,5	175	220			565	235	232	-	30

JA 150-300

Self-priming

Self-priming centrifugal pumps for water supply (also mixed with air) of small and medium domestic and civil installations, that can be connected to an autoclave tank.

Construction features	
Pump body	cast iron
Motor bracket	cast iron
Impeller	Noryl® or brass
Mechanical seal	ceramic-graphite-NBR
Motor shaft	stainless steel AISI 303 hydraulic side
Liquid temperature	0 - 50 °C
Operating pressure	max 8 bar

Motor	
2 poles induction motor	3~ 220/380V - 60Hz 1~ 220V - 60Hz (with thermal protection)
Insulation class	F
Protection degree	IPX4

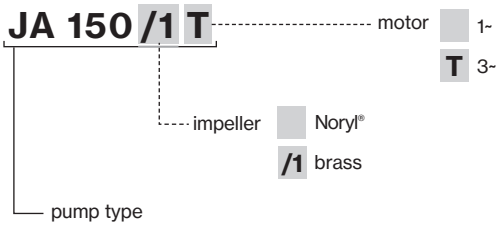

LOTS				
TYPE	TRUCK		CONTAINER	
	PALLET (cm)	N° pumps	PALLET (cm)	N° pumps
JA 150÷200(T)	80×120×140	25	80×120×190	35
JA 300	85×110×160	20	85×110×190	24
JA 300T	80×120×140	25	80×120×190	35

JA 150-300

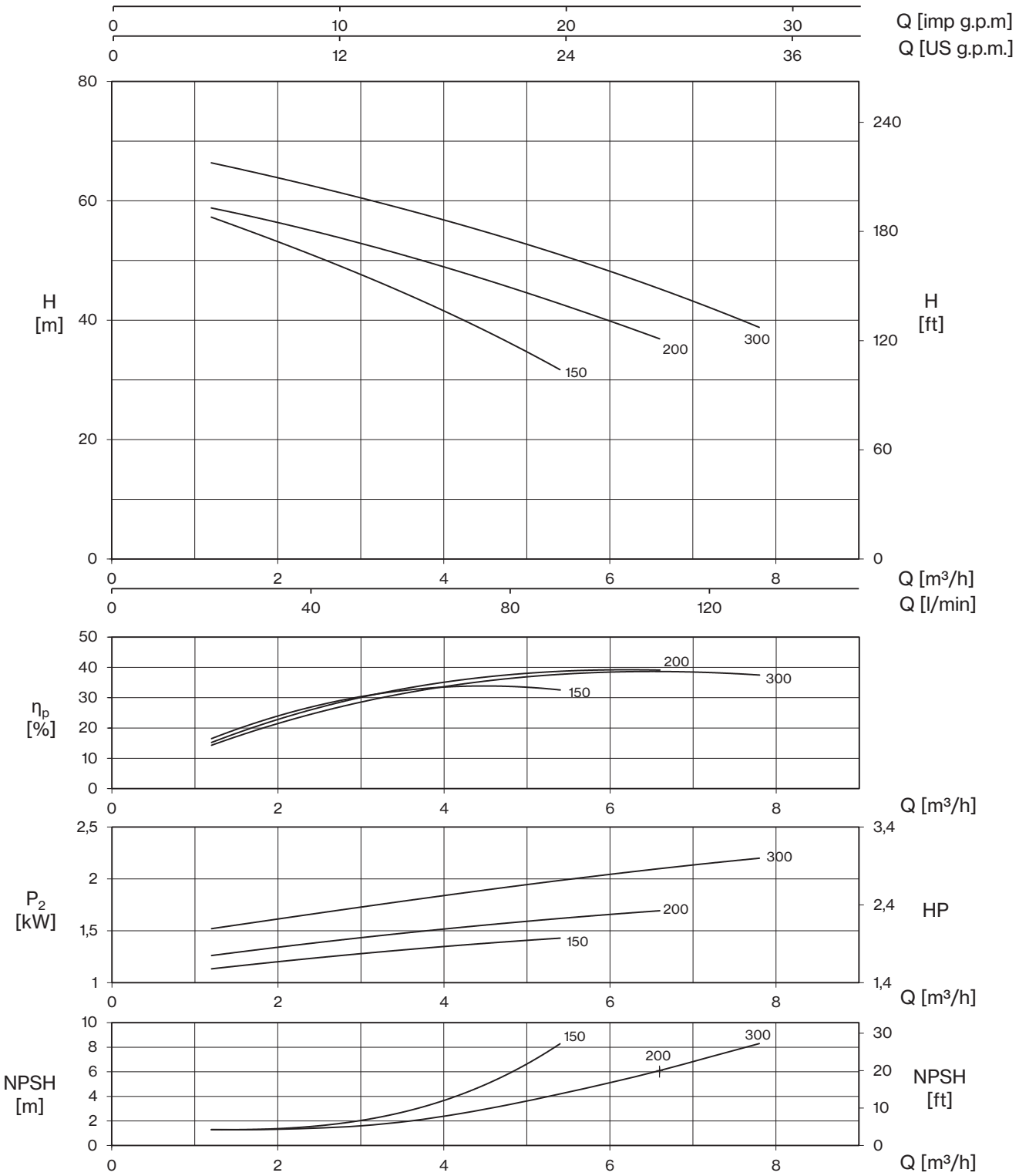

TYPE - 60 Hz		P2		P1		CURRENT		Q (m³/h - l/min)								
1~	3~			1~	3~	1~ 220V	3~ 380V	0	1,2	1,8	3	4,2	5,4	6,6	7,2	7,8
								0	20	30	50	70	90	110	120	130
		HP	kW	kW		A		H (m)								
JA 150	**JA 150T**	2	1,5	1,8	1,7	8,6	3,6	62,3	57,2	54,3	47,6	40,2	31,7	-	-	-
JA 200	**JA 200T**	2,5	1,85	2,3	2,2	10,5	4,4	62,1	58,9	57,0	52,9	48,2	42,7	36,9	-	-
JA 300	**JA 300T**	3	2,2	2,8	2,5	14,8	5,1	69,1	66,4	64,5	60,5	56,0	51,0	45,3	42,1	38,8

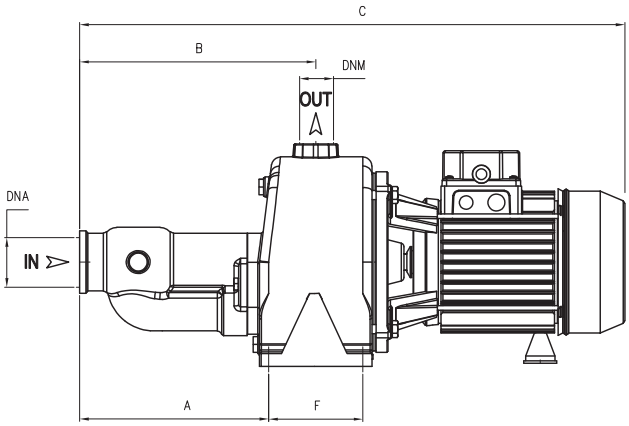

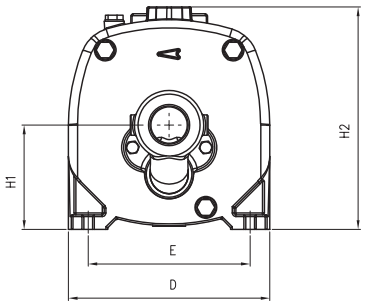

TYPE		DIMENSIONS (mm)														
1~	3~	A	B	C	D	E	F	H1	H2	DNA	DNM	I	L	M	~1	~3
JA 150	**JA 150T**	204	257	626	220	177	105	112	240	1" ½ G	1" G	638	230	255	33	34
JA 200	**JA 200T**	204	257	626	220	177	105	112	240			638	230	255	32,5	33
JA 300	**-**	204	257	696	220	177	105	112	240			777	259	280	42	-
-	**JA 300T**	204	257	626	220	177	105	112	240			638	230	255	-	34

MON/A

Self-priming

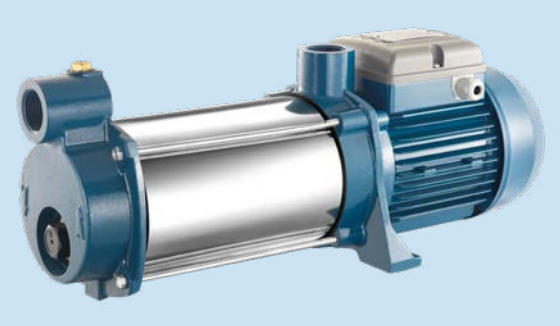

Multi-stage centrifugal pumps, horizontal and self-priming, particularly suitable for constructing small and medium sized pressurisation systems; able to suck liquids mixed with air.

Construction features

Pump body	cast iron
Motor bracket	cast iron
Impeller	Noryl®
Mechanical seal	ceramic-graphite-NBR
Motor shaft	stainless steel AISI 416
Liquid temperature	0 - 50 °C
Operating pressure	max 11 bar

Motor

2 poles induction motor	3~ 220/380V - 60Hz 1~ 220V - 60Hz (with thermal protection)
Insulation class	F
Protection degree	IPX4

1~ 110V - 60Hz	
TYPE	I (A)
MON 80/3A	7,6
MON 100/4A	10,0
MON 120/5A	12,2

MON 100 /4 A T

- pump type
- No. of impellers
- self-priming
- motor: 1~ / **T** 3~

LOTS				
TYPE	TRUCK		CONTAINER	
	PALLET (cm)	N° pumps	PALLET (cm)	N° pumps
MON/A(T)	80×120×150	48	80×120×190	64

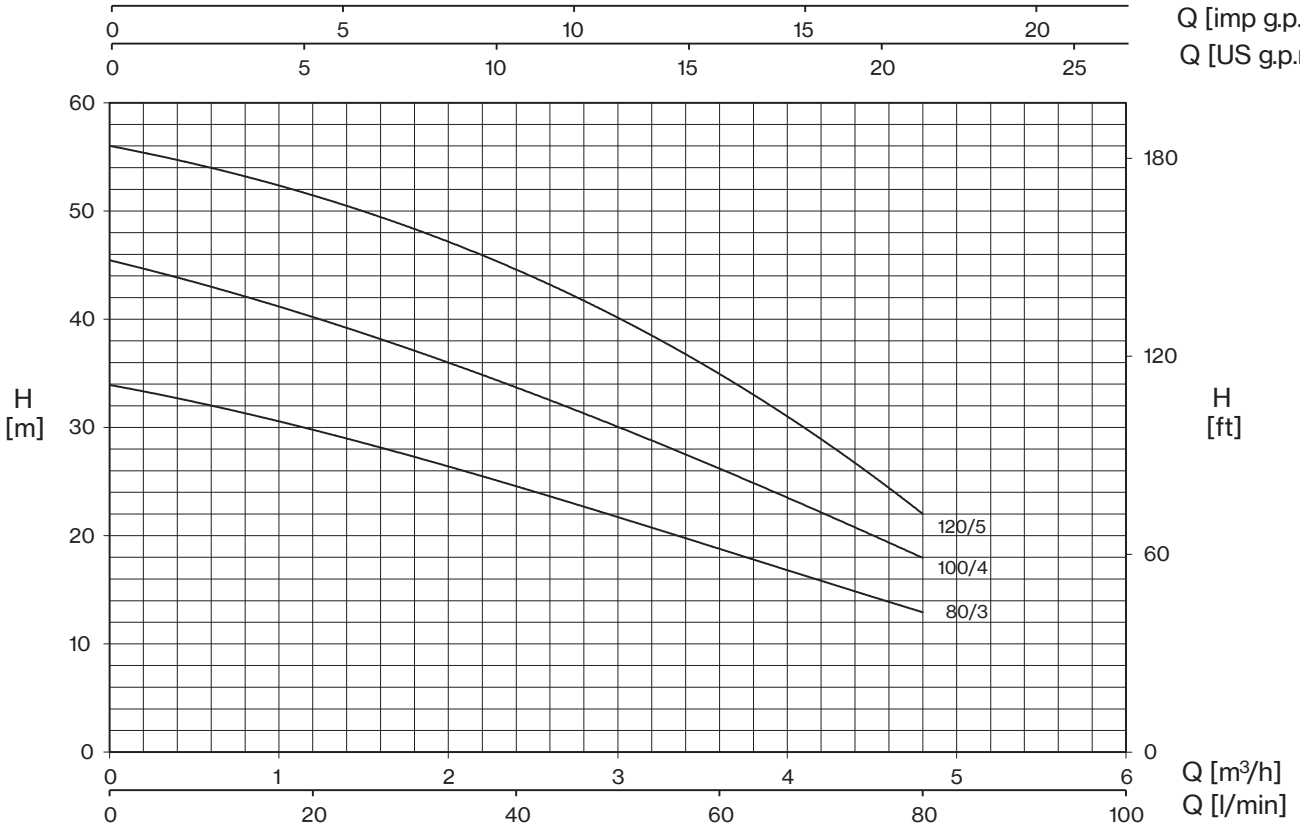

TYPE - 60 Hz		P2		P1		CURRENT		Q (m³/h - l/min)				
1~	3~			1~	3~	1~ 220V	3~ 380V	0	1,2	2,4	3,6	4,8
								0	20	40	60	80
		HP	kW	kW		A		H (m)				
MON 80/3A	**MON 80/3AT**	0,8	0,59	0,83	0,88	3,8	1,6	34,0	29,5	25,0	18,5	13,0
MON 100/4A	**MON 100/4AT**	1	0,74	1,07	1,1	5	1,9	45,5	40,0	34,0	26,0	18,0
MON 120/5A	**MON 120/5AT**	1,2	0,88	1,27	1,33	6,1	2,3	56,0	51,5	44,5	35,0	22,0

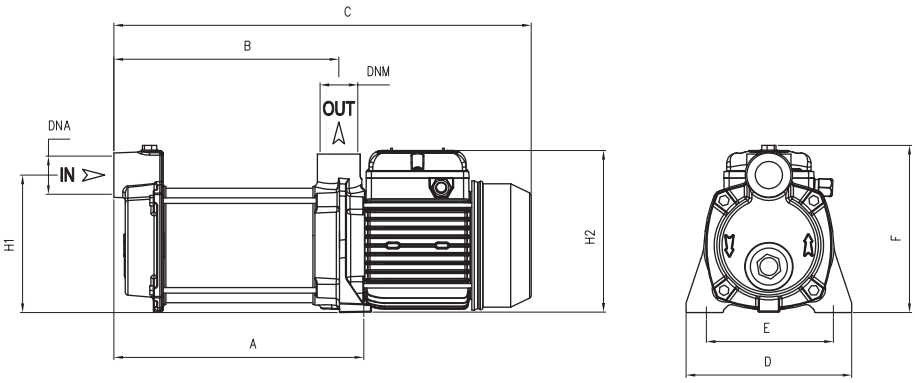

TYPE		DIMENSIONS (mm)													Kg
1~	3~	A	B	C	D	E	F	H1	H2	DNA	DNM	I	L	M	
MON 80/3A	**MON 80/3AT**	245	224	425	180	140	185	150	175			440	200	215	14
MON 100/4A	**MON 100/4AT**	270	240	450	180	140	185	150	175	1" G	1" G	500	200	215	15,5
MON 120/5A	**MON 120/5AT**	295	264	475	180	140	185	150	175			500	200	215	16

JXM

Self-priming

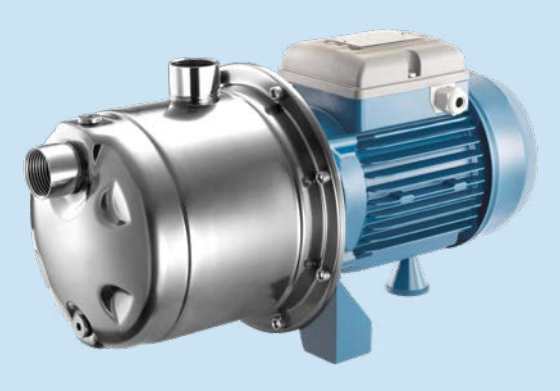

Multi-stage centrifugal pumps, horizontal and self-priming, particularly suitable for constructing small and medium sized pressurisation systems; able to suck liquids mixed with air.

Construction features

Pump body	stainless steel AISI 304
Motor bracket	aluminum
Impeller	Noryl®
Mechanical seal	ceramic-graphite-NBR
Pump shaft	stainless steel AISI 416
Liquid temperature	0 - 50 °C
Operating pressure	max 8 bar

Motor

2 poles induction motor	3~ 220/380V - 60Hz 1~ 220V - 60Hz (with thermal protection)
Insulation class	F
Protection degree	IPX4

1~ 110V - 60Hz	
TYPE	I (A)
JXM 100/4	10,0
JXM 120/5	12,2

JXM 105 /4 T

- motor: 1~ / **T** 3~
- No. of impellers
- pump type

LOTS				
TYPE	TRUCK		CONTAINER	
	PALLET (cm)	N° pumps	PALLET (cm)	N° pumps
JXM(T)	85×110×170	60	85×110×190	80

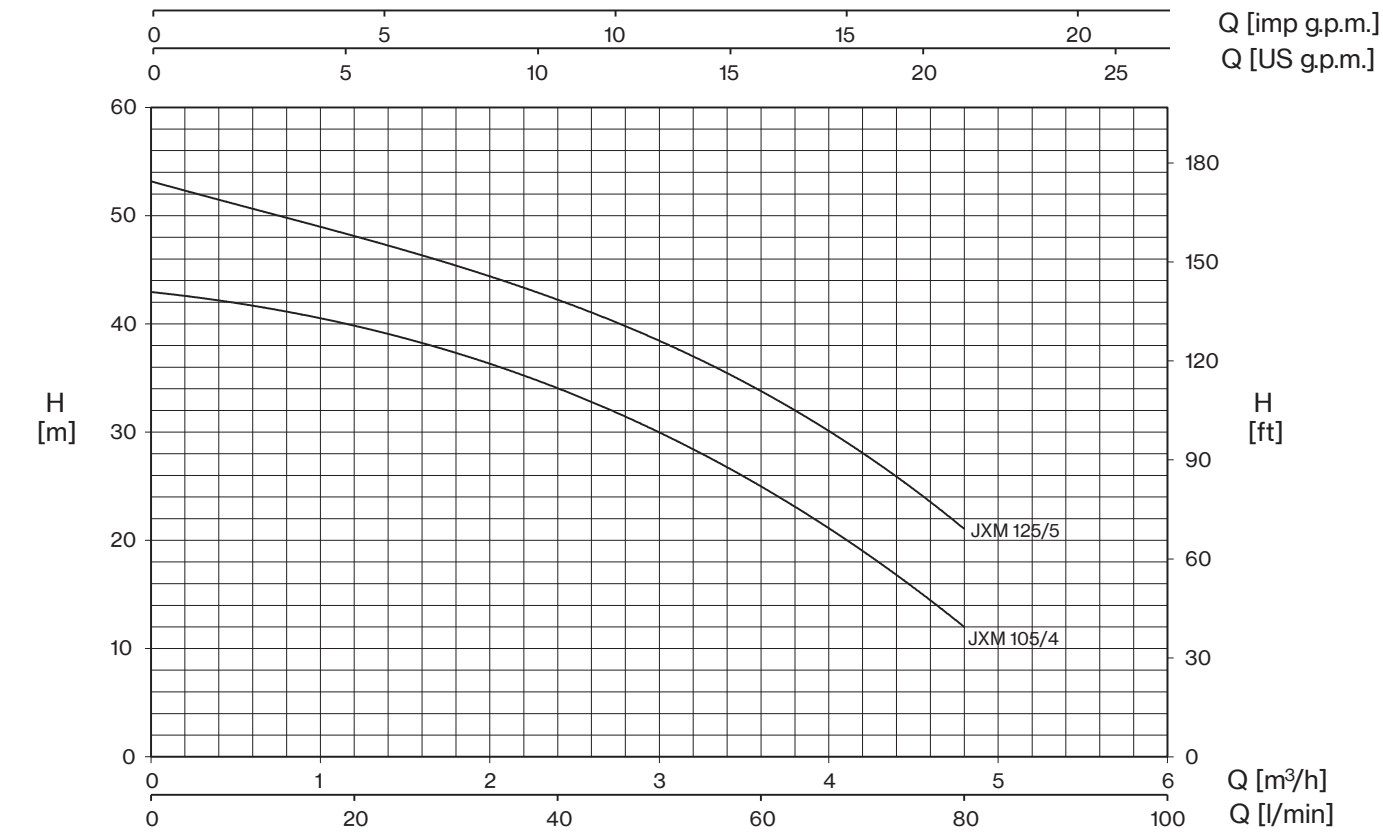

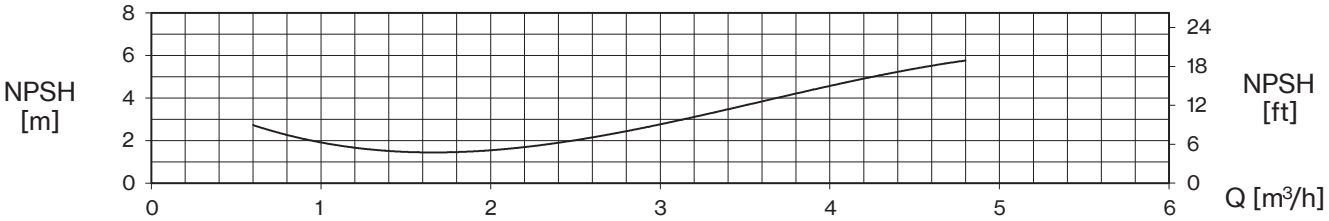

TYPE - 60 Hz		P2		P1		CURRENT		Q (m³/h - l/min)					
1~	3~			1~	3~	1~ 220V	3~ 380V	0	0,6	1,2	2,4	3,6	4,8
								0	10	20	40	60	80
		HP	kW	kW		A		H (m)					
JXM 105/4	**JXM 105/4T**	1	0,74	1,07	1,1	5	1,9	43,0	41,5	40,0	34,0	25,0	12,0
JXM 125/5	**JXM 125/5T**	1,2	0,88	1,27	1,33	6,1	2,3	53,0	51,0	48,0	42,0	34,0	21

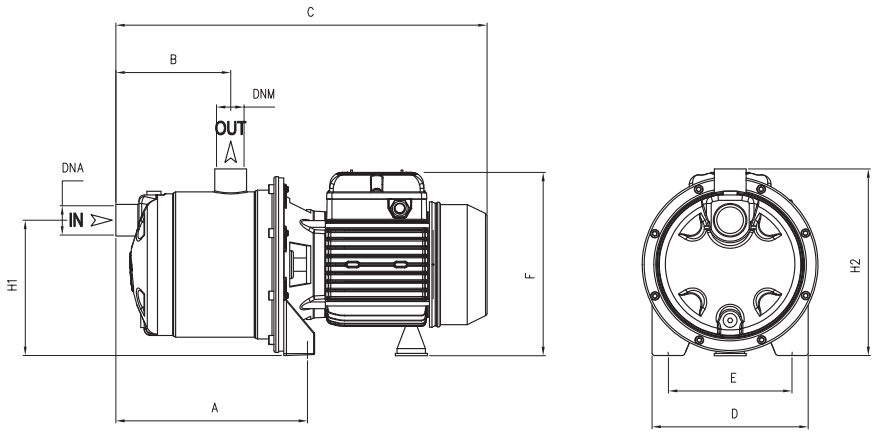

TYPE		DIMENSIONS (mm)													Kg
1~	3~	A	B	C	D	E	F	H1	H2	DNA	DNM	I	L	M	
JXM 105/4	**JXM 105/4T**	208	128	410	175	140	215	153	210	1" G	1" G	430	210	235	11
JXM 125/5	**JXM 125/5T**	208	128	410	175	140	215	153	210			430	210	235	11,5

JXM GARDEN-BOX

Portable electropumps complete with handle, cable with plug and switch.
The performances depend on adopted pump type.

JXM GARDEN

JXM BOX

TYPE - 60 Hz	P2		P1	Pipe		Performance	
1~	HP	kW	kW	Suction	Delivery	Q (l/min)	H (m)
JXM 105/4 GARDEN-BOX	1	0,74	1,07	1	1	10-80	41,5-12
JXM 125/5 GARDEN-BOX	1,2	0,88	1,27	1	1	10-80	51-21

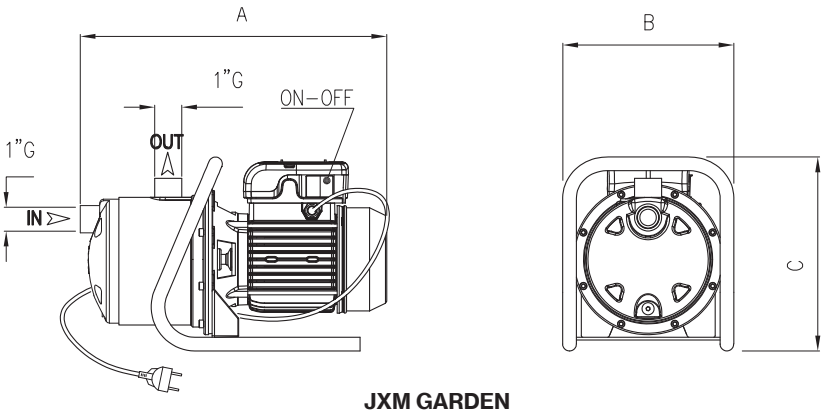

JXM GARDEN

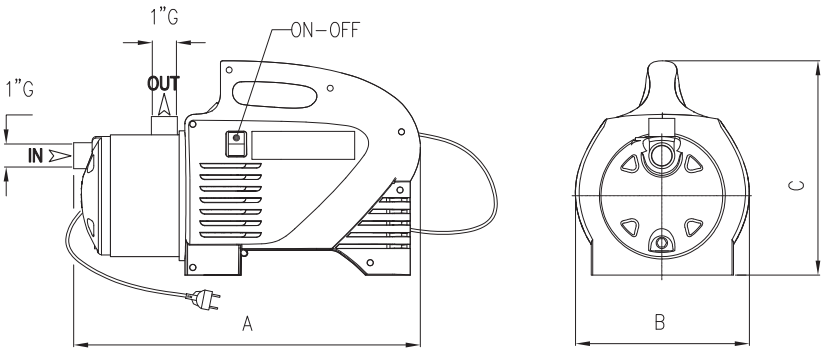

JXM BOX

TYPE	DIMENSIONS (mm)		
	A	B	C
JXM 105/4 GARDEN	410	175	285
JXM 125/5 GARDEN	410	175	285
JXM 105/4 BOX	429	209	287
JXM 125/5 BOX	410	175	285

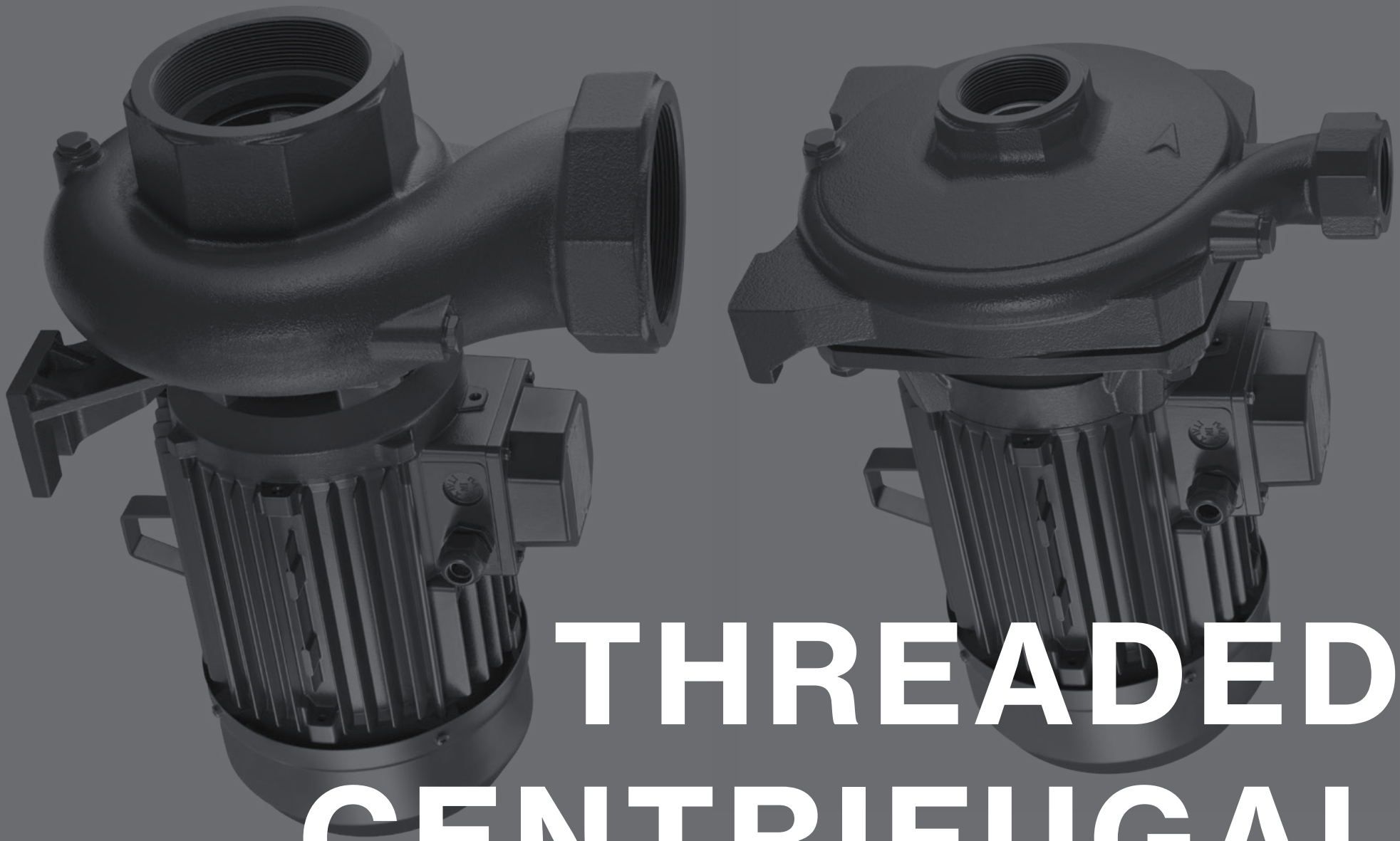

THREADED CENTRIFUGAL

THREADED CENTRIFUGAL PUMPS

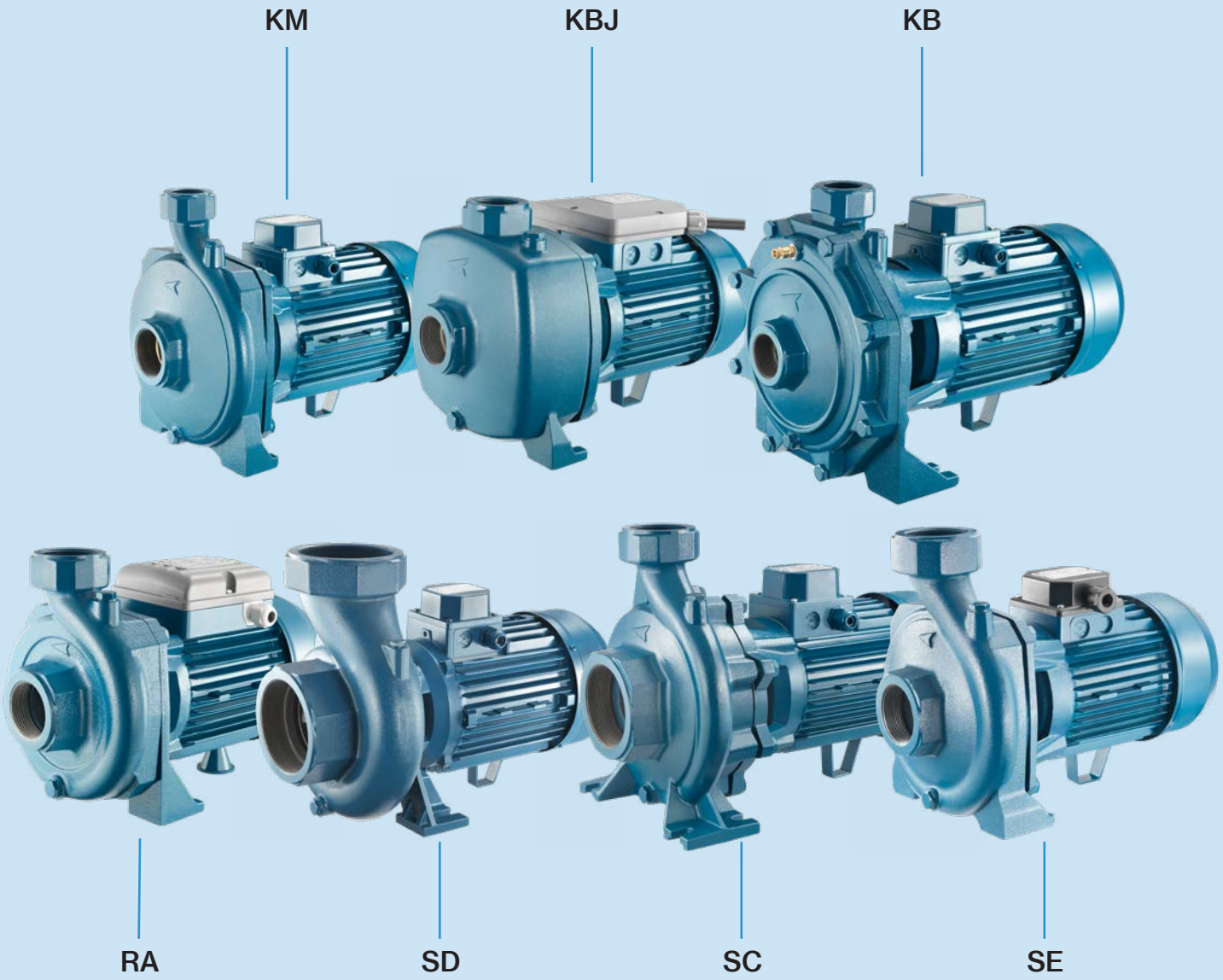

Extremely silent single and double impeller centrifugal pumps, designed for a wide range of applications

Applications:

- Water supply
- Pressurization
- Water circulation systems for heating and air conditioning
- Liquid transfer in industry and horticulture

THREADED CENTRIFUGAL PUMPS

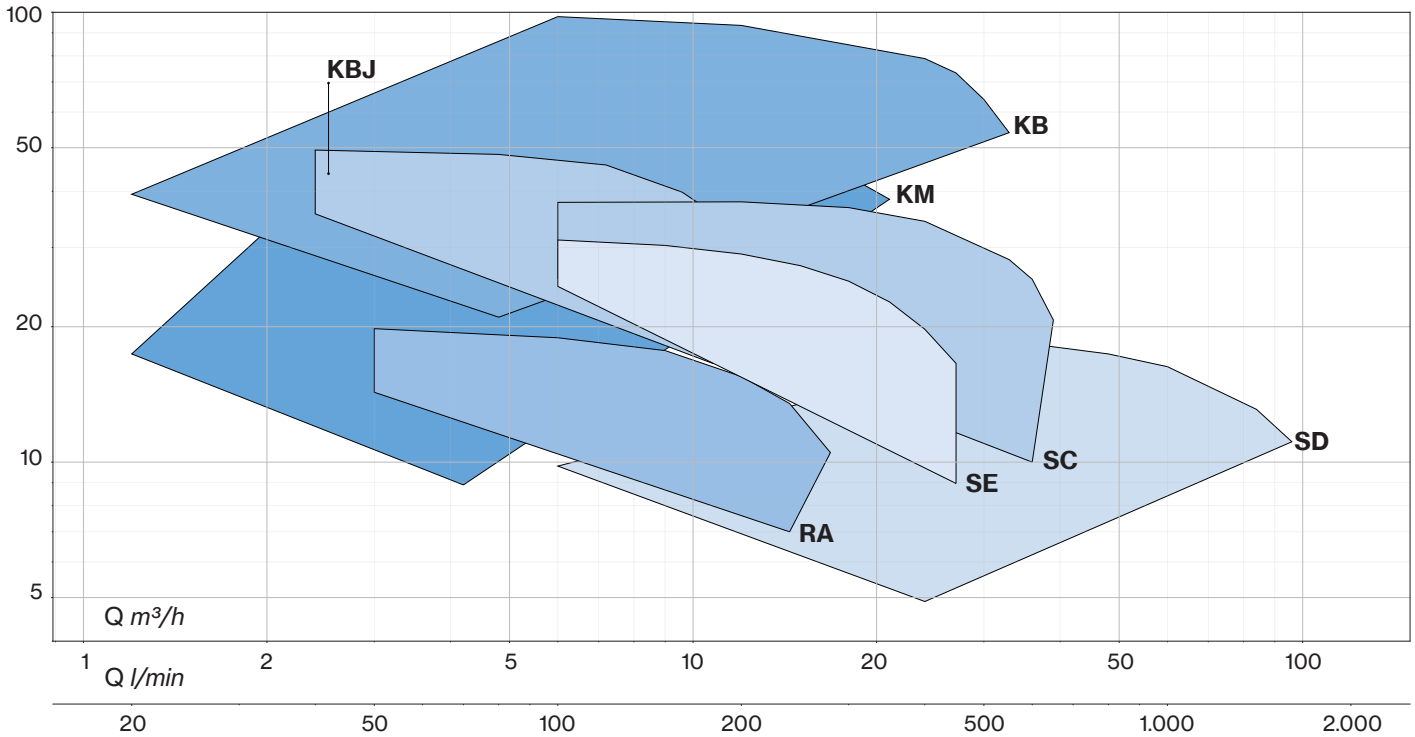

KM

Threaded Centrifugal

Single-impeller centrifugal pumps, extremely quiet, suitable for domestic, civil and industrial applications. The pumps guarantee constant pressure at the variation of flow rates.

Construction features

Pump body	cast iron
Motor bracket	cast iron (45, 50; 164÷550); aluminum (86-106)
Impeller	Noryl® (45) Noryl® or brass (50÷550)
Mechanical seal	ceramic-graphite-NBR
Motor shaft	steel AISI 416 (45÷106) steel AISI 303 (164÷550)
Liquid temperature	Noryl® impeller: 0 - 50 °C brass impeller: 0 - 90 °C
Operating pressure	max 6 bar (45÷106) max 8 bar (164÷550)

KM 106 / 1 T

- motor: 1~ / **T** 3~
- impeller: Noryl® / **1** brass
- motor bracket: **0 4** cast iron / **6** aluminum
- pump type

Motor

2 poles induction motor	3~ 220/380V - 60Hz 1~ 220V - 60Hz (with thermal protection up to MEC 80)
Insulation class	F
Protection degree	IPX4

1~ 110V - 60Hz	
TYPE	I (A)
KM 45	5,4
KM 70	8,6
KM 50	6,4
KM 86	9,6
KM 106V	10,8
KM 106	12,2

LOTS				
TYPE	TRUCK		CONTAINER	
	PALLET (cm)	N° pumps	PALLET (cm)	N° pumps
KM 45÷50(T)	80×120×145	102	80×120×190	136
KM 86÷106(T)	85×110×145	65	85×110×195	91
KM 164÷314(T)	85×110×170	40	85×110×200	48
KM 314	85×110×150	24	85×110×180	30
KM 314T	85×110×170	40	85×110×200	48
KM 400÷550(T)	85×110×150	24	85×110×180	30

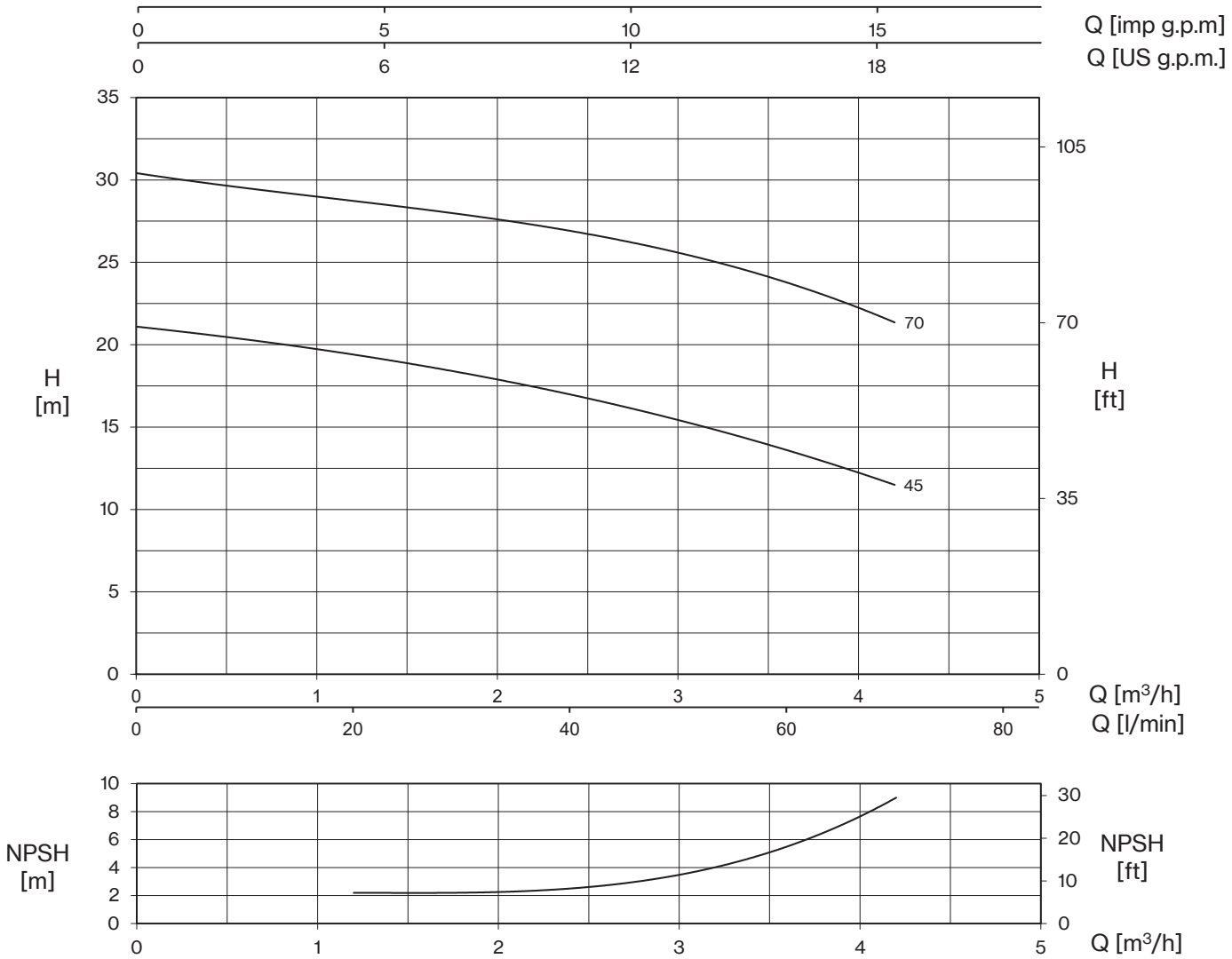

TYPE - 60 Hz		P2		P1		CURRENT		Q (m³/h - l/min)				
1~	3~			1~	3~	1~ 220V	3~ 380V	0	1,2	2,4	3,6	4,2
								0	20	40	60	70
		HP	kW	kW		A		H (m)				
KM 45	**KM 45T**	0,4	0,3	0,57	0,62	2,7	1	21,1	19,4	17,0	13,6	11,5
KM 70	**KM 70T**	0,6	0,45	0,9	0,94	4,3	1,6	30,4	28,8	26,8	23,9	21,3

KM

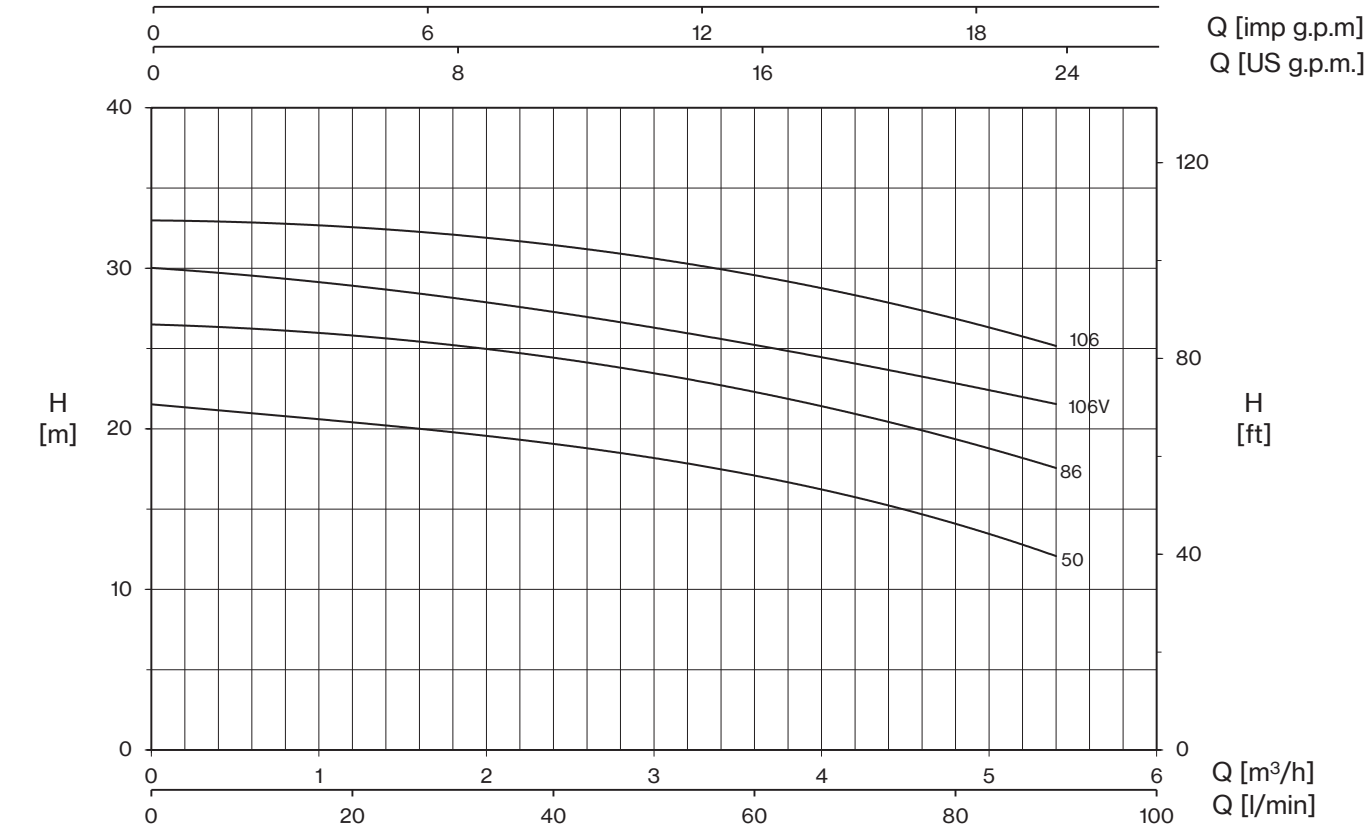

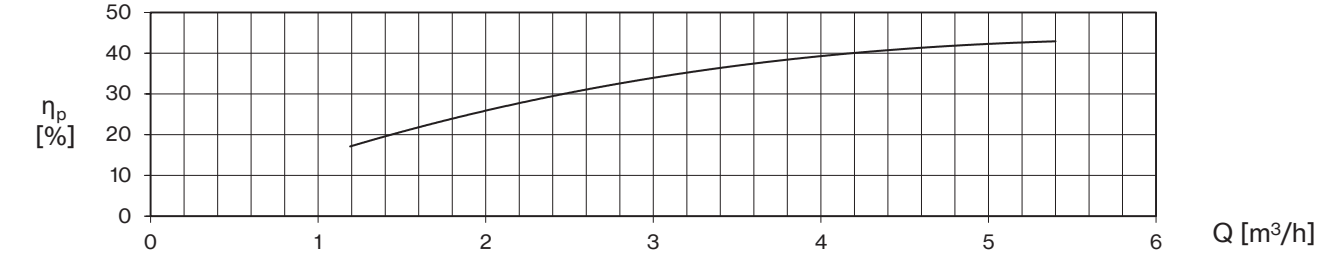

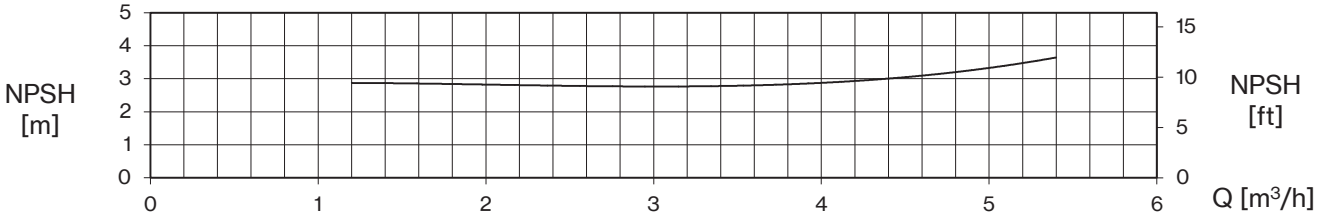

TYPE - 60 Hz		P2		P1		CURRENT		Q (m³/h - l/min)					
1~	3~			1~	3~	1~ 220V	3~ 380V	0	1,2	2,4	3,6	4,8	5,4
								0	20	40	60	80	90
		HP	kW	kW		A		H (m)					
KM 50	**KM 50T**	0,5	0,37	0,68	0,75	3,2	1,3	21,5	20,5	19,0	17,0	14,2	12,0
KM 86	**KM 86T**	0,8	0,59	0,98	1	4,8	1,8	26,5	25,8	24,5	22,2	19,5	17,5
KM 106 V	**-**	1	0,74	1,15	-	5,4	-	30,0	29,0	27,2	25,2	22,9	21,5
KM 106	**KM 106T**	1	0,74	1,3	1,33	6,1	2,2	33,0	32,5	31,5	29,6	26,8	25,2

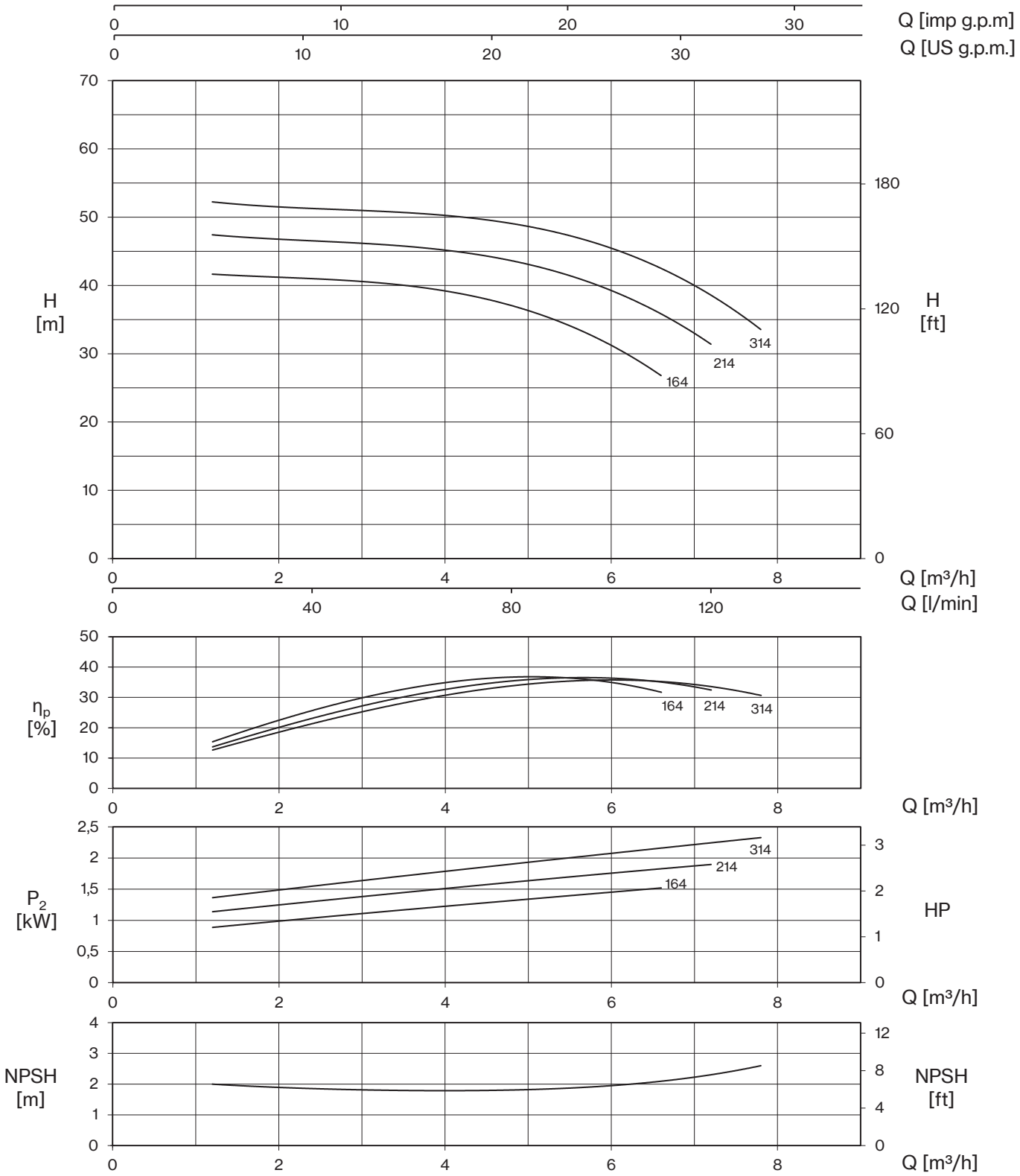

TYPE - 60 Hz		P2		P1		CURRENT		Q (m³/h - l/min)								
1~	3~			1~	3~	1~ 220V	3~ 380V	0	1,2	2,4	3,6	4,8	6	6,6	7,2	7,8
								0	20	40	60	80	100	110	120	130
		HP	kW	kW		A		H (m)								
KM 164	**KM 164T**	2	1,5	1,9	1,8	8,9	3,8	41,8	41,6	41,1	39,7	37,3	31,1	26,9	-	-
KM 214	**KM 214T**	2,5	1,84	2,3	2,2	10,8	4,4	47,6	47,3	46,8	45,5	43,4	39,6	35,7	31,3	-
KM 314	**KM 314T**	3	2,2	2,8	2,5	14,8	5,1	52,3	52,1	51,7	50,5	48,5	45,9	42,7	38,4	33,5

KM

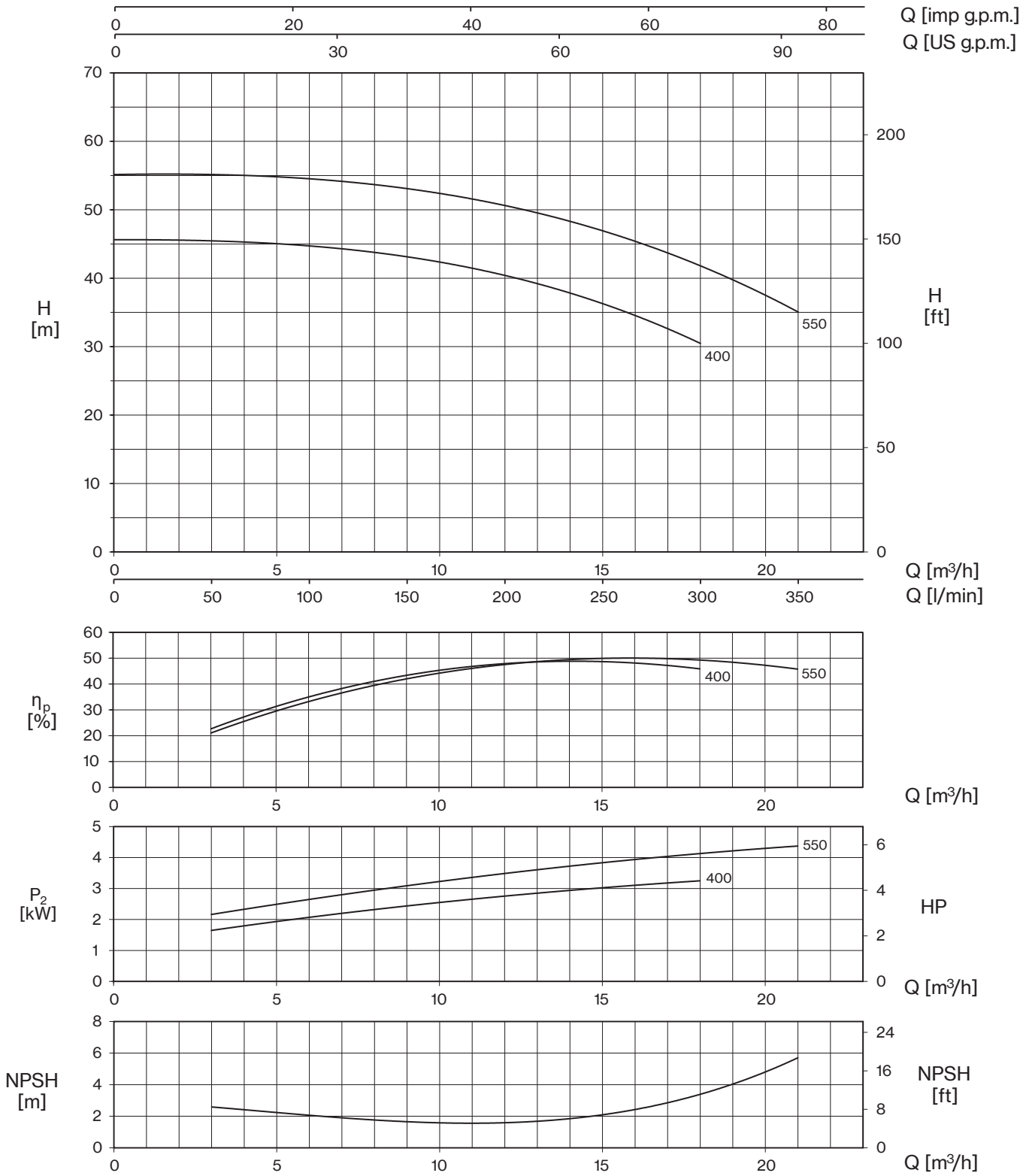

TYPE - 60 Hz		P2		P1		CURRENT		Q (m³/h - l/min)							
1~	3~			1~	3~	1~ 220V	3~ 380V	0	3	6	9	12	15	18	21
								0	50	100	150	200	250	300	350
		HP	kW	kW		A		H (m)							
KM 400	**KM 400T**	4	3	3,7	3,7	17,6	7,0	45,6	45,4	44,9	43,0	40,3	36,4	30,4	
-	**KM 550T**	5,5	4	-	5,0	-	9,4	55,1	55,1	54,7	53,1	50,3	47,0	42,0	34,9

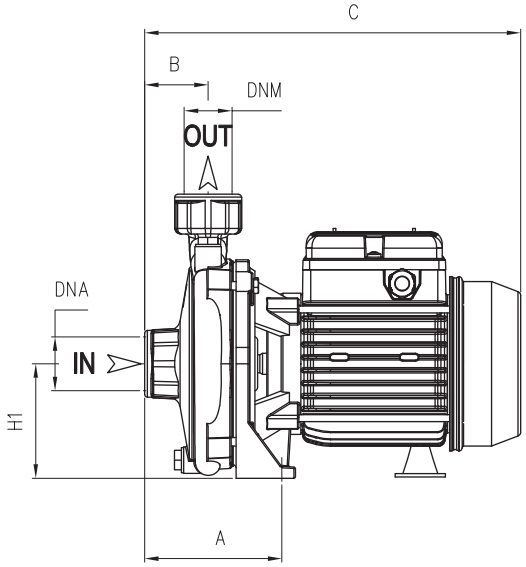

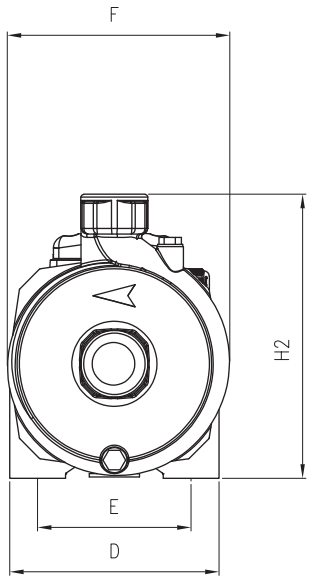

TYPE		DIMENSIONS (mm)													Kg	
1~	3~	A	B	C	D	E	F	H1	H2	DNA	DNM	I	L	M	1~	3~
KM 45	**KM 45T**	95	45,5	265	150	110	160	82	202	1" G	1" G	290	175	225	8,5	8,5
KM 70	**KM 70T**	95	45,5	265	150	110	160	82	202			290	170	230	10	10
KM 50	**KM 50T**	95	45,5	265	150	110	160	82	202	1" G	1" G	290	175	225	9,5	9,5
KM 86	**KM 86T**	110	46,5	300	180	140	185	97	234			325	200	265	13,5	13
KM 106 V	**-**	110	46,5	300	180	140	185	97	234			325	200	265	14	-
KM 106	**KM 106T**	110	46,5	300	180	140	185	97	234			325	200	265	15	14,5
KM 164	**KM 164T**	117	46,5	378	220	180	225	115	285	1" ¼ G	1" G	420	230	309	24	26,5
KM 214	**KM 214T**	117	46,5	378	220	180	225	115	285			420	230	309	26	25,5
KM 314	**-**	117	46,5	446	220	180	225	115	285			520	235	320	34	-
-	**KM 314T**	117	46,5	378	220	180	225	115	285			420	230	309	-	26,5
KM 400	**KM 400T**	108	54	460	240	190	250	133	323	2" G	1" ¼ G	480	255	342	45,5	41
-	**KM 550T**	108	54	460	240	190	250	133	323			480	255	342	45,5	45,5

KBJ

Threaded Centrifugal

Two impeller compact centrifugal pumps for constructing pressurisation systems for civil and industrial plant: guarantee good ratio between pressure and flow rate.

Construction features

Pump body	cast iron
Motor bracket	cast iron
Impeller	brass or Noryl®
Mechanical seal	ceramic-graphite-NBR
Motor shaft	stainless steel AISI 303
Liquid temperature	0 - 50 °C
Operating pressure	max 8 bar

Motor

2 poles induction motor	3~ 220/380V - 60Hz 1~ 220V - 60Hz (with thermal protection)
Insulation class	F
Protection degree	IPX4

KBJ 150 /1 T

- motor: 1~ / **T** 3~
- impeller: Noryl® / **/1** brass
- pump type

LOTS				
TYPE	TRUCK		CONTAINER	
	PALLET (cm)	N° pumps	PALLET (cm)	N° pumps
KBJ 130÷200(T)	85×110×160	35	85×110×190	42
KBJ 300	80×120×145	24	80×120×175	30
KBJ 300(T)	85×110×160	35	85×110×190	42

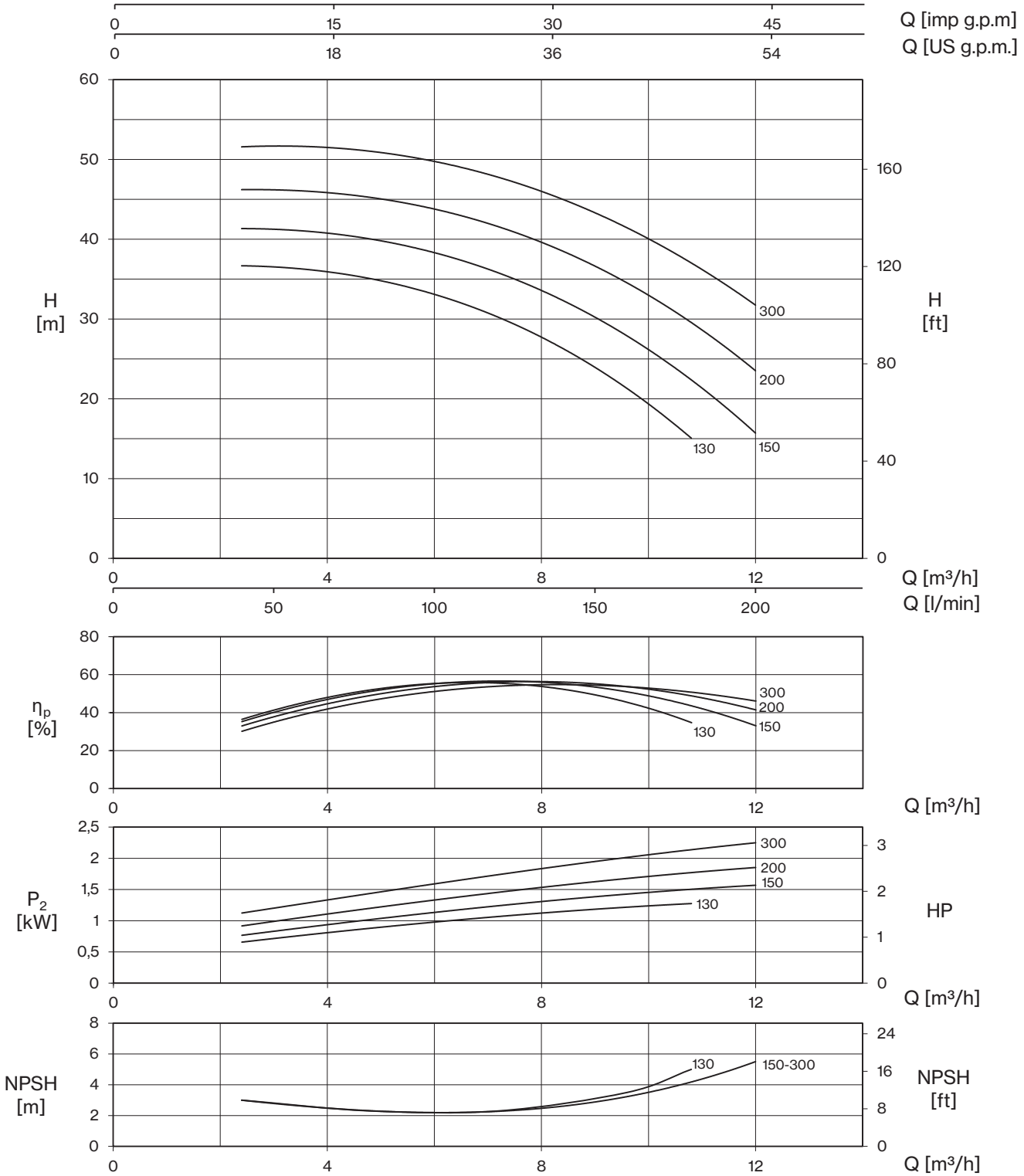

TYPE - 60 Hz		P2		P1		CURRENT		Q (m³/h - l/min)						
1~	3~			1~	3~	1~ 220V	3~ 380V	0	2,4	4,8	7,2	9,6	10,8	12
								0	40	80	120	160	180	200
		HP	kW	kW		A		H (m)						
KBJ 130	**-**	1,8	1,3	1,6	-	7,7	-	35,9	36,7	35,1	30,2	21,3	15,1	-
KBJ 150	**KBJ 150T**	2	1,5	2,0	1,8	9,2	3,8	40,6	41,3	40,1	35,7	27,9	22,4	15,7
KBJ 200	**KBJ 200T**	2,5	1,84	2,3	2,2	10,8	4,4	45,3	46,2	45,3	41,4	34,6	29,6	23,5
KBJ 300	**KBJ 300T**	3	2,20	2,8	2,5	14,8	5,1	50,6	51,6	51,1	47,7	41,4	37,1	31,7

KBJ

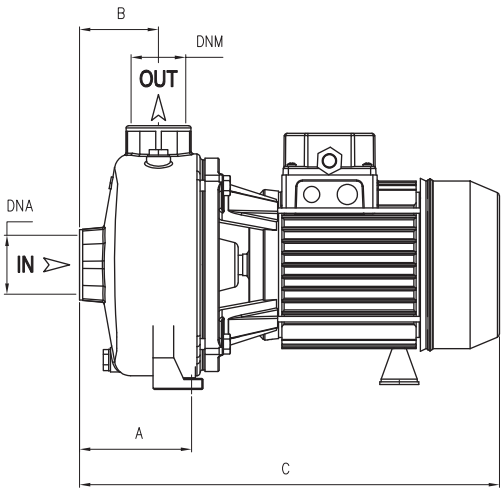

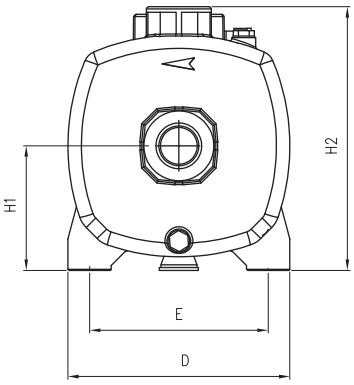

TYPE		DIMENSIONS (mm)												Kg	
1~	3~	A	B	C	D	E	H1	H2	DNA	DNM	I	L	M	1~	3~
KBJ 130	**-**	108	73	415	205	165	115	242			433	220	287	23	-
KBJ 150	**KBJ 150T**	108	73	415	205	165	115	242			433	220	287	23,5	24,5
KBJ 200	**KBJ 200T**	108	73	415	205	165	115	242	1" ½ G	1" ¼ G	433	220	287	24,5	24
KBJ 300	**-**	108	73	485	205	165	115	242			520	235	320	32,5	-
-	**KBJ 300T**	108	73	415	205	165	115	242			433	220	287	-	25

KB

Threaded Centrifugal

Twin-impeller centrifugal pumps for pressurisation systems in civil and industrial applications; the dual impellers ensure high head.

Construction features

Pump body	cast iron
Motor bracket	cast iron
Impeller	brass or Noryl® (100÷900 T) brass (750 T÷1500 T)
Mechanical seal	ceramic-graphite-NBR
Motor shaft	stainless steel AISI 303 stainless steel AISI 416 (100)
Liquid temperature	Noryl® impeller: 0 - 50 °C brass impeller: 0 - 90 °C
Operating pressure	max 6 bar (100) max 11 bar (160-1500 T)

Motor

2 poles induction motor	3~ 220/380V - 60Hz 1~ 220V - 60Hz (with thermal protection up to MEC 80)
Insulation class	F
Protection degree	IPX4 IPX5 (800÷1500)

1~ 110V - 60Hz	
TYPE	I (A)
KB 100	10,8

KB 100 /1 T

- motor: 1~ / **T** 3~
- impeller: Noryl® brass (750, 1000÷1500) / **/1** brass (100÷550, 751R)
- pump type

LOTS				
TYPE	TRUCK		CONTAINER	
	PALLET (cm)	N° pumps	PALLET (cm)	N° pumps
KB 100(T)	90×110×145	65	90×110×195	91
KB 160÷210(T)	85×110×160	35	85×110×190	42
KB 310	85×110×150	24	85×110×180	30
KB 310T	85×110×160	35	85×110×190	42
KB 400÷900(T)	85×120×150	24	85×120×180	30
KB 750÷1500(T)	100×120×140	18	100×120×185	24

KB

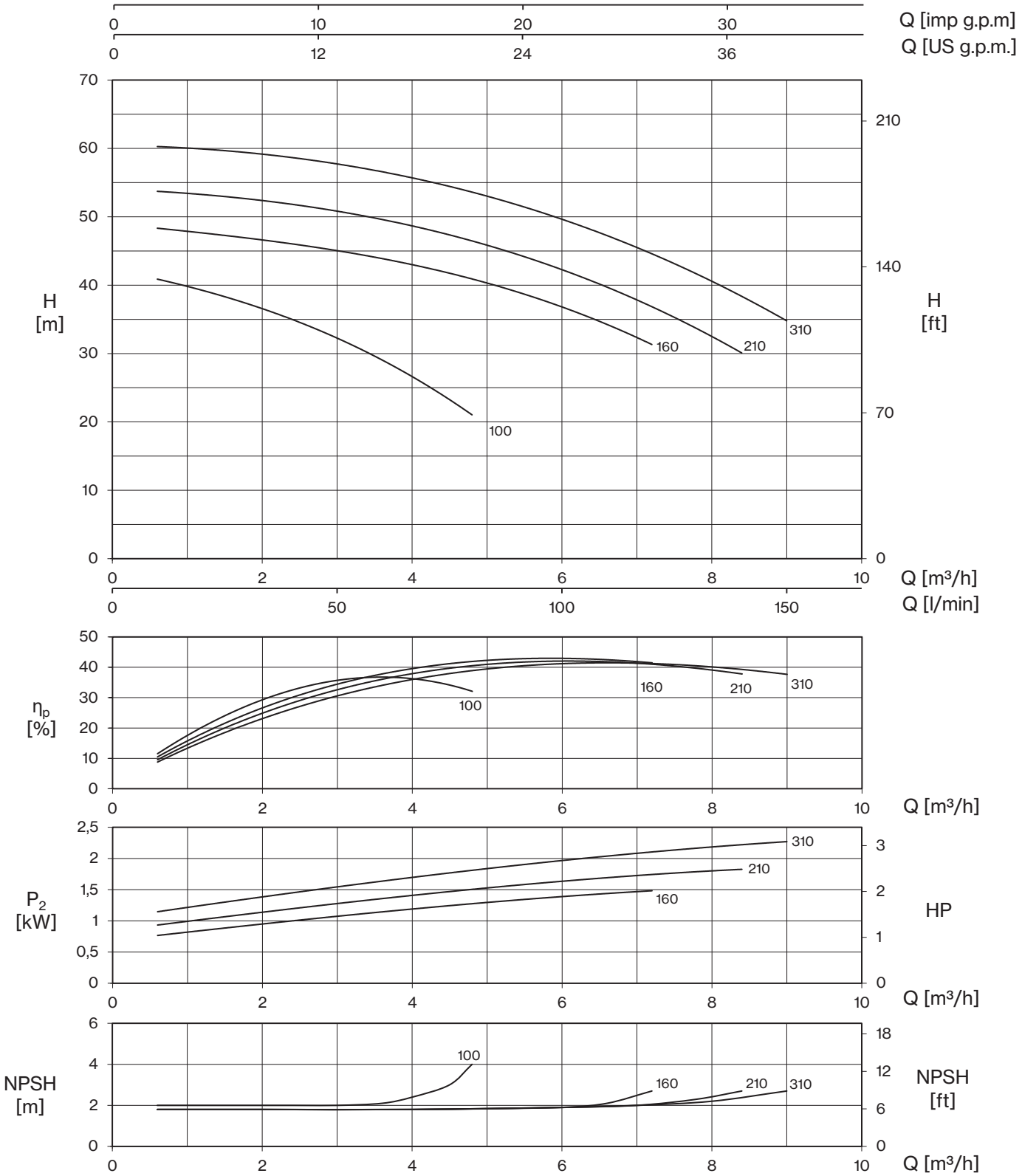

TYPE - 60 Hz		P2		P1		CURRENT		Q (m³/h - l/min)										
1~	3~			1~	3~	1~ 220V	3~ 380V	0	0,6	1,2	1,8	2,4	3,6	4,8	6	7,2	8,4	9
								0	10	20	30	40	60	80	100	120	140	150
		HP	kW	kW		A		H (m)										
KB 100	**KB 100T**	1	0,74	1,17	1,15	5,4	2,4	42,0	40,8	39,4	37,4	34,7	29,2	21,0	-	-	-	-
KB 160	**KB 160T**	2	1,5	1,9	1,8	8,9	3,8	49,0	48,4	47,6	46,9	46,0	44,0	40,9	36,8	31,3	-	-
KB 210	**KB 210T**	2,5	1,84	2,3	2,2	10,8	4,4	54,6	53,9	53,2	52,5	51,6	49,8	46,6	42,2	36,6	30,2	-
KB 310	**KB 310T**	3	2,2	2,8	2,5	14,8	5,1	61,0	60,4	59,8	59,3	58,7	56,8	53,5	49,6	44,6	38,3	34,8

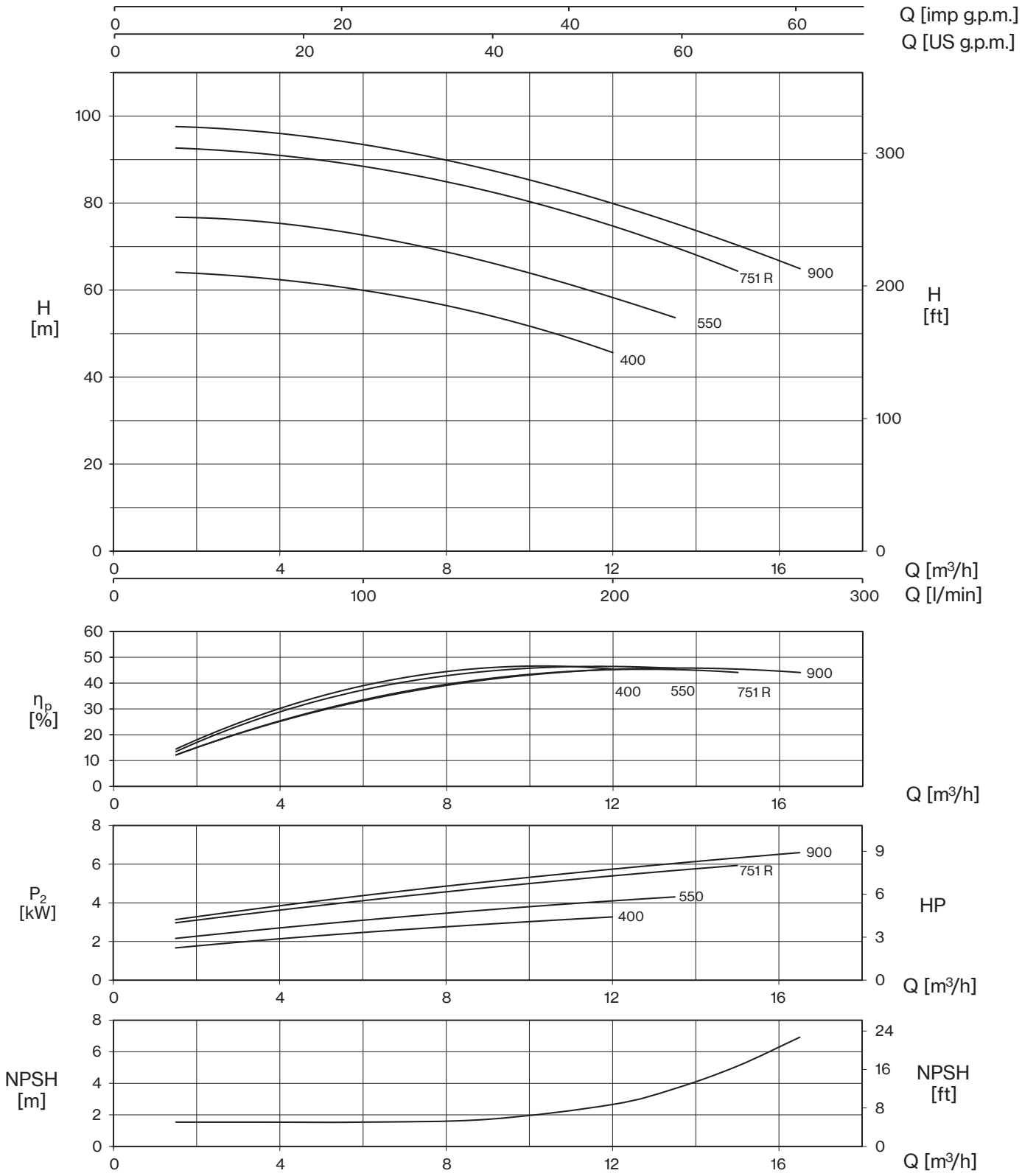

TYPE - 60 Hz		P2		P1		CURRENT		Q (m³/h - l/min)											
1~	3~			1~	3~	1~ 220V	3~ 380V	0	1,5	3,0	4,5	6,0	7,5	9,0	10,5	12	13,5	15,0	16,5
								0	25	50	75	100	125	150	175	200	225	250	275
		HP	kW	kW		A		H (m)											
KB 400	**KB 400T**	4	3	3,7	3,8	17,7	7,1	64,2	64,1	63,3	61,9	59,9	57,4	54,3	50,4	45,6			
KB 550	**KB 550T**	5,5	4,0	5,2	4,9	24,5	9,4	76,9	76,8	76,1	74,7	72,7	69,9	66,6	62,5	58,2	53,7		
-	**KB 751RT**	7,5	5,5	-	6,5	-	12,1	92,9	92,7	91,8	90,4	88,5	85,9	82,8	79,0	74,7	69,9	64,4	
-	**KB 900T**	10	7,5	-	7,4	-	14,2	98,0	97,7	96,8	95,4	93,4	90,9	87,8	84,2	80,0	75,2	70,1	65,1

KB

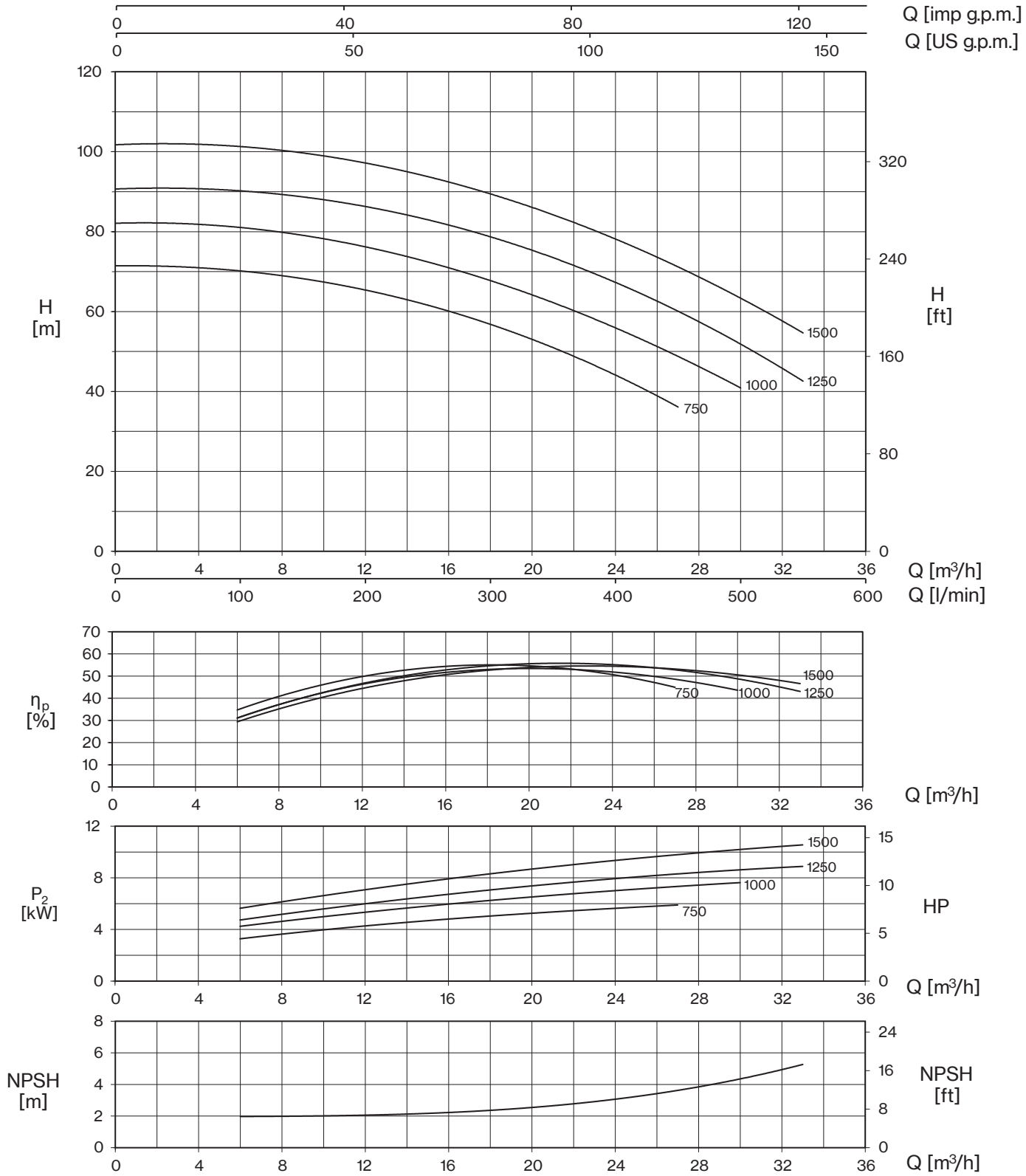

TYPE - 60 Hz	P2		P1	AMPERE	Q (m³/h - l/min)							
3~				3~ 380V	0	6	12	18	24	27	30	33
					0	100	200	300	400	450	500	550
	HP	kW	kW	A	H (m)							
KB 750T	7,5	5,5	6,7	11,5	71,5	70,0	65,6	56,8	44,0	36,2		
KB 1000T	10	7,5	8,5	14,6	82,0	81,3	75,6	68,2	56,1	48,3	41,1	
KB 1250T	12,5	9,2	9,9	17,0	90,6	90,5	85,8	79,0	67,5	59,9	51,6	42,7
KB 1500T	15	11	11,5	19,8	101,6	101,9	96,6	89,3	78,8	71,3	62,6	54,9

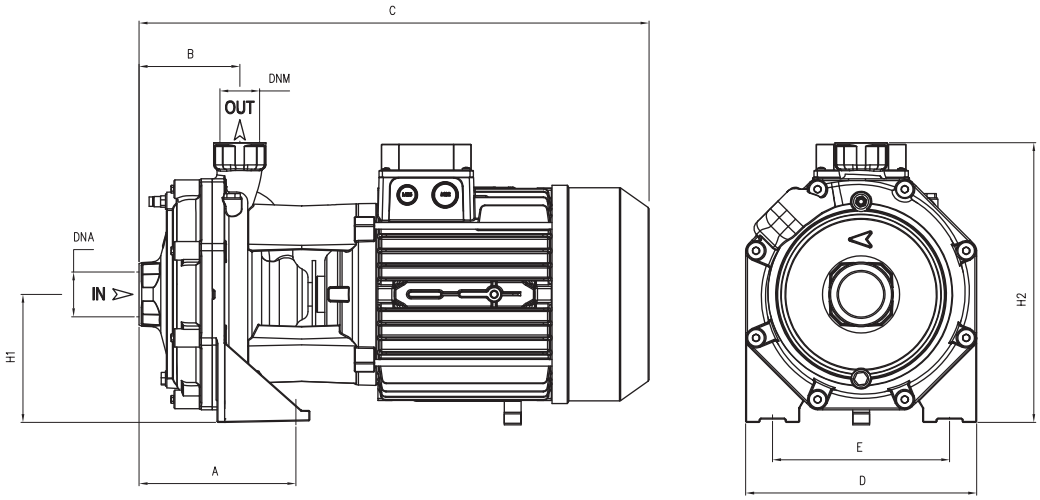

TYPE		DIMENSIONS (mm)													
1~	3~	A	B	C	D	E	H1	H2	DNA	DNM	I	L	M	1~	3~
KB 100	**KB 100T**	122	72	328	180	140	98	228	1" G	1" G	350	195	265	15,5	15
KB 160	**KB 160T**	115	82	408	210	170	110	265	1" ¼ G		433	220	287	25	26
KB 210	**KB 210T**	115	82	408	210	170	110	265			433	220	287	25,5	26,5
KB 310	**-**	115	82	477	210	170	110	265			520	235	320	35	-
-	**KB 310T**	115	82	408	210	170	110	265			433	220	287	-	26
KB 400	**KB 400T**	145	95,5	498	266	212	135	305	1" ½ G	1" ¼ G	553	274	318	48	44
KB 550	**KB 550T**	145	95,5	498	266	212	135	305			553	274	318	56,5	48
-	**KB 751RT**	145	95,5	532	266	212	135	305			553	274	318	-	56
-	**KB 900T**	145	95,5	532	266	212	135	305			553	274	318	-	62
-	**KB 750T**	190	120	605	275	210	150	330	2" G	1" ¼ G	675	390	300	-	77
-	**KB 1000T**	190	120	605	275	210	150	330			675	390	300	-	83
-	**KB 1250T**	190	120	645	275	210	150	330			675	390	300	-	91
-	**KB 1500T**	190	120	645	275	210	150	330			675	390	300	-	94,5

RA

Threaded Centrifugal

Medium delivery centrifugal pumps for agricultural applications. Equipped with an open impeller that allows the pumping of non-clean liquids, guaranteeing the free passage of small solids (Ø max. 10 mm).

Construction features

Pump body	cast iron
Motor bracket	cast iron
Impeller	Noryl® or brass
Mechanical seal	ceramic-graphite-NBR
Motor shaft	stainless steel AISI 416
Liquid temperature	Noryl® impeller: 0 - 50 °C brass impeller: 0 - 90 °C
Operating pressure	max 6 bar

Motor

2 poles induction motor	3~ 220/380V - 60Hz 1~ 220V - 60Hz (with thermal protection)
Insulation class	F
Protection degree	IPX4

1~ 110V - 60Hz	
TYPE	I (A)
RA 82	6,8
RA 102	10,6

RA 102 /1 T

- motor: 1~ / **T** 3~
- impeller: Noryl® / **/1** brass
- pump type

LOTS				
TYPE	TRUCK		CONTAINER	
	PALLET (cm)	N° pumps	PALLET (cm)	N° pumps
RA(T)	85×110×145	65	85×110×195	91

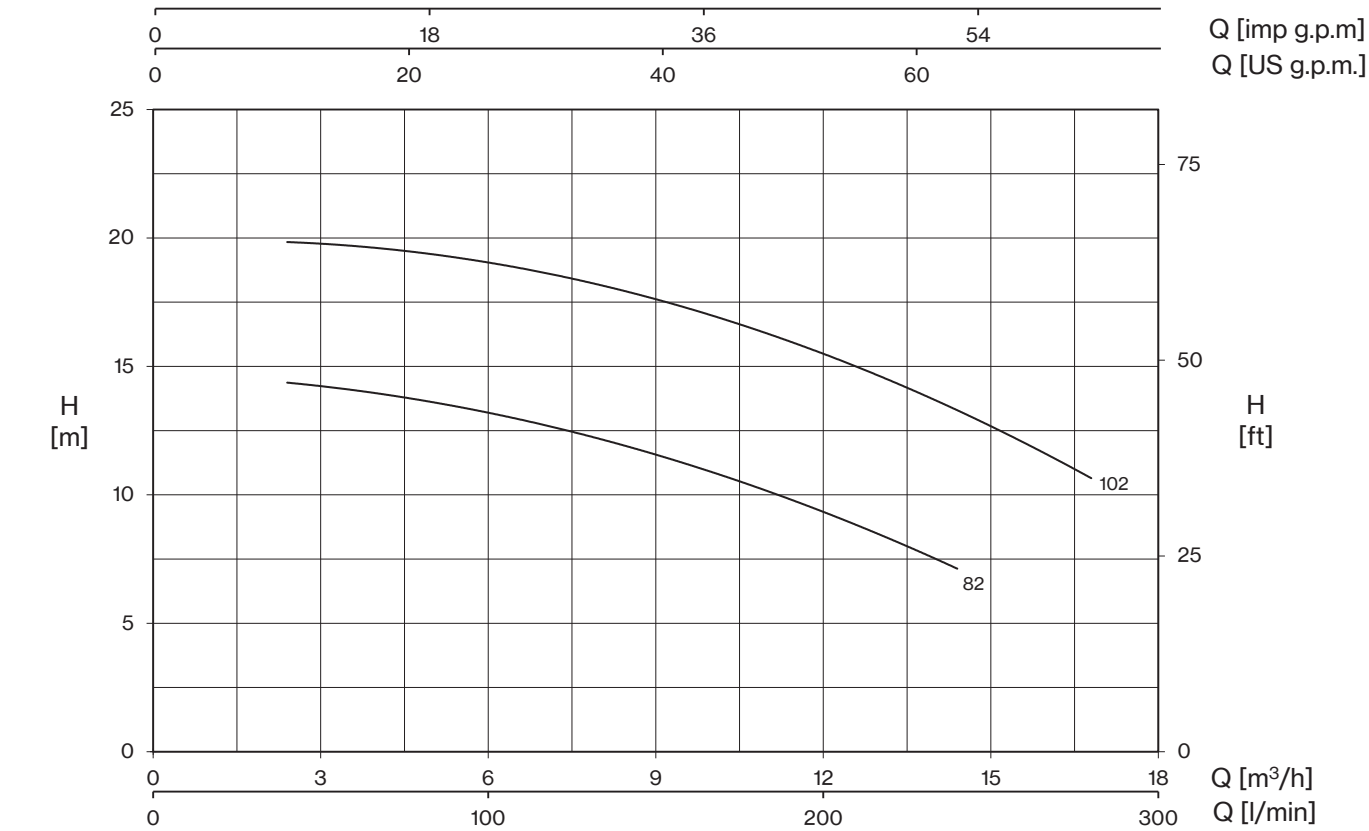

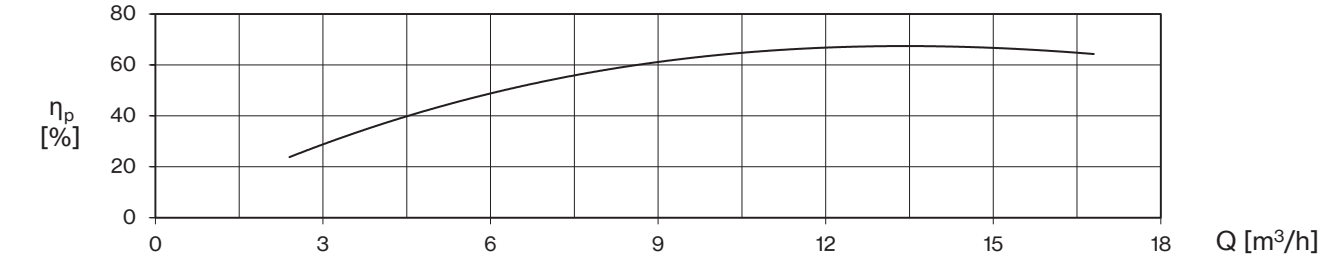

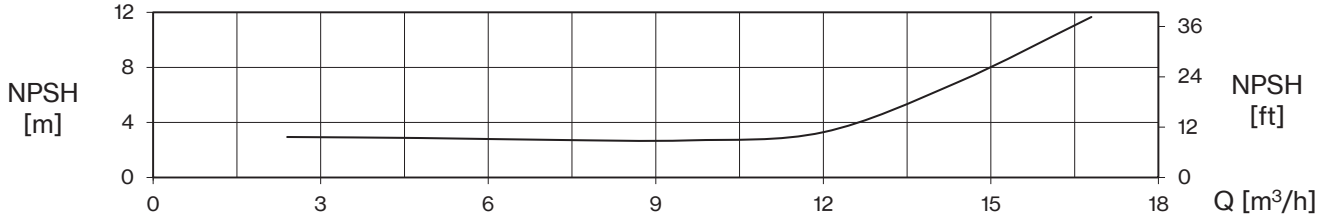

TYPE - 60 Hz		P2		P1		CURRENT		Q (m³/h - l/min)						
1~	3~			1~	3~	1~ 220V	3~ 380V	0	3	6	9	12	14,4	16,8
								0	50	100	150	200	240	280
		HP	kW	kW		A		H (m)						
RA 82	**RA 82T**	0,8	0,59	0,73	0,83	3,4	1,5	15,0	14,3	13,0	11,6	9,5	7,0	
RA 102	**RA 102T**	1	0,74	1,14	1,20	5,3	2,4	20,5	19,8	18,9	17,7	15,5	13,5	10,5

RA

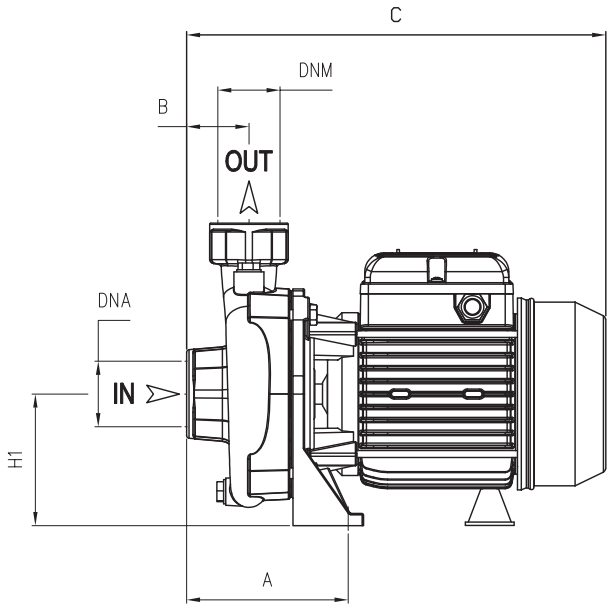

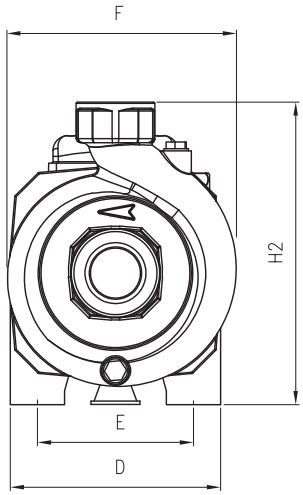

TYPE		DIMENSIONS (mm)													Kg	
1~	3~	A	B	C	D	E	F	H1	H2	DNA	DNM	I	L	M	1~	3~
RA 82	**RA 82T**	120	45	308	155	115	170	97	222	1" ½ G	1" ½ G	325	200	265	13,1	12,5
RA 102	**RA 102T**	120	45	308	155	115	170	97	222			325	200	265	14,5	13,7

SD

Threaded Centrifugal

Single-impeller, medium to high-flow rate centrifugal pumps with 2”, 3” and 4” delivery openings. Mainly used in agriculture for flood and sprinkler irrigation, and water withdrawal from reservoirs or canals.

Construction features

Pump body	cast iron
Motor bracket	cast iron
Impeller	cast iron or brass (SDB)
Mechanical seal	ceramic-graphite-NBR
Motor shaft	stainless steel AISI 303 stainless steel AISI 416 (80-120)
Liquid temperature	0 - 90 °C
Operating pressure	max 6 bar

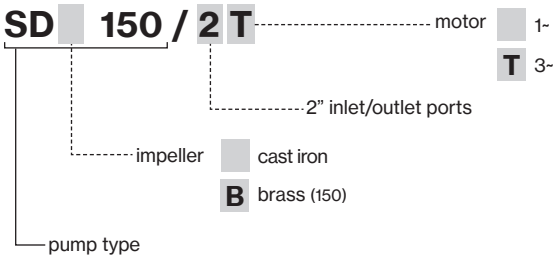

Motor

2 poles induction motor	3~ 220/380V - 60Hz 1~ 220V - 60Hz (with thermal protection up to MEC 80)
Insulation class	F
Protection degree	IPX4

1~ 110V - 60Hz	
TYPE	I (A)
SD 80/2	7,4
SD 100/2	10,6
SD 120/2	12,4
SDB 100/2	12,0

LOTS				
TYPE	TRUCK		CONTAINER	
	PALLET (cm)	N° pumps	PALLET (cm)	N° pumps
SD 80/2÷120/2(T)	90×110×145	65	90×110×195	91
SD(B) 100/2÷250/2(T)	85×110×170	40	85×110×200	48
SD 200/3-300/3(T)	85×110×150	30	85×110×180	60
SD 400/3÷550/4(T)	80×120×150	30	80×120×180	60
SD 750/4T-1000/4T	100×120×140	18	100×120×185	24

SD

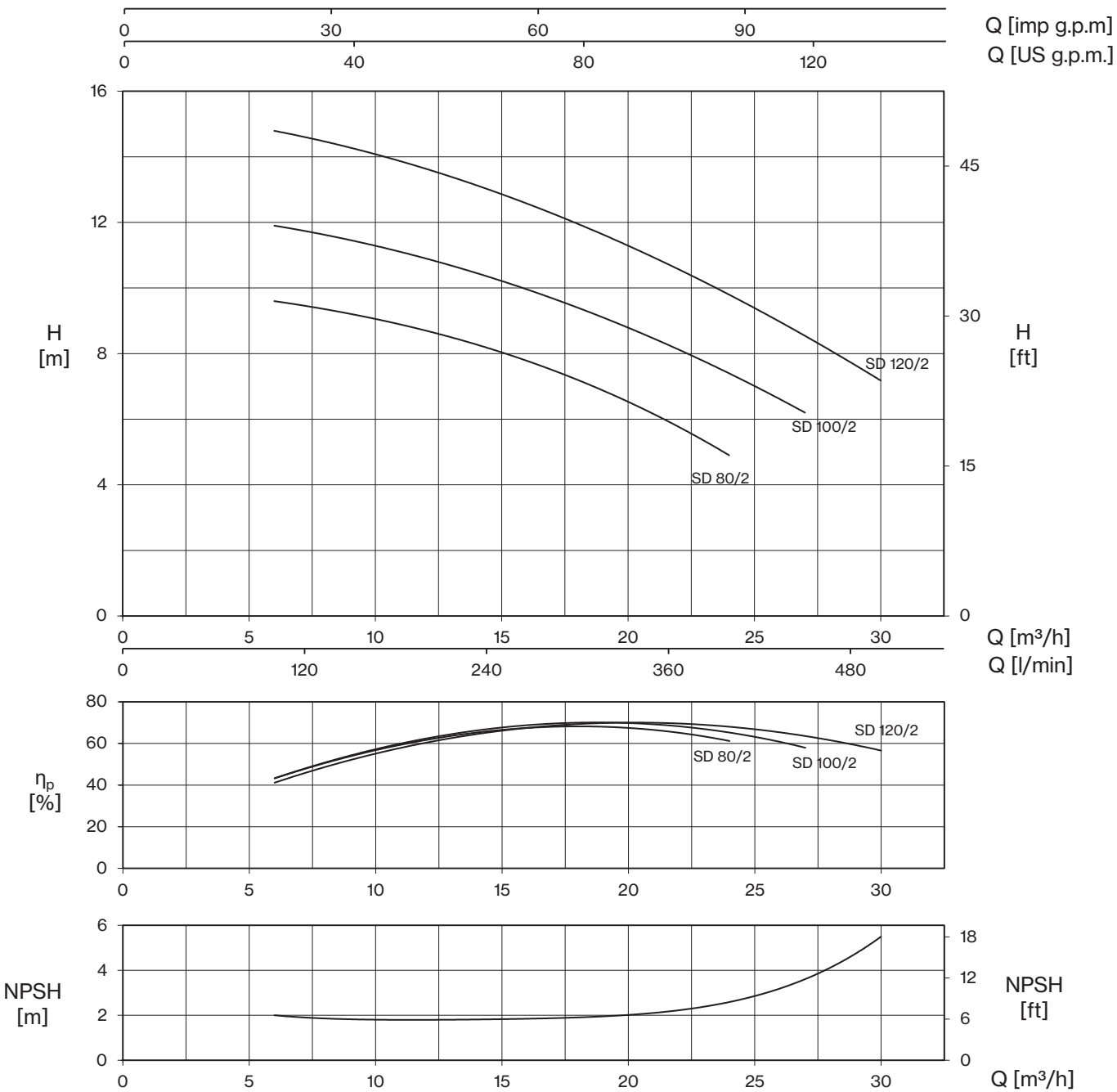

TYPE - 60 Hz		P2		P1		CURRENT		Q (m³/h - l/min)						
1~	3~			1~	3~	1~ 220V	3~ 380V	0	6	12	18	24	27	30
								0	100	200	300	400	450	500
		HP	kW	kW		A		H (m)						
SD 80/2	**SD 80/2T**	0,8	0,59	0,8	0,75	3,7	1,5	9,7	9,6	8,7	7,2	4,9		
SD 100/2	**SD 100/2T**	1	0,74	1,1	0,95	5,3	1,8	12	11,9	10,9	9,4	7,4	6,2	
SD 120/2	**SD 120/2T**	1,2	0,9	1,3	1,2	6,2	2,2	15	14,8	13,6	12	9,8	8,5	7,2

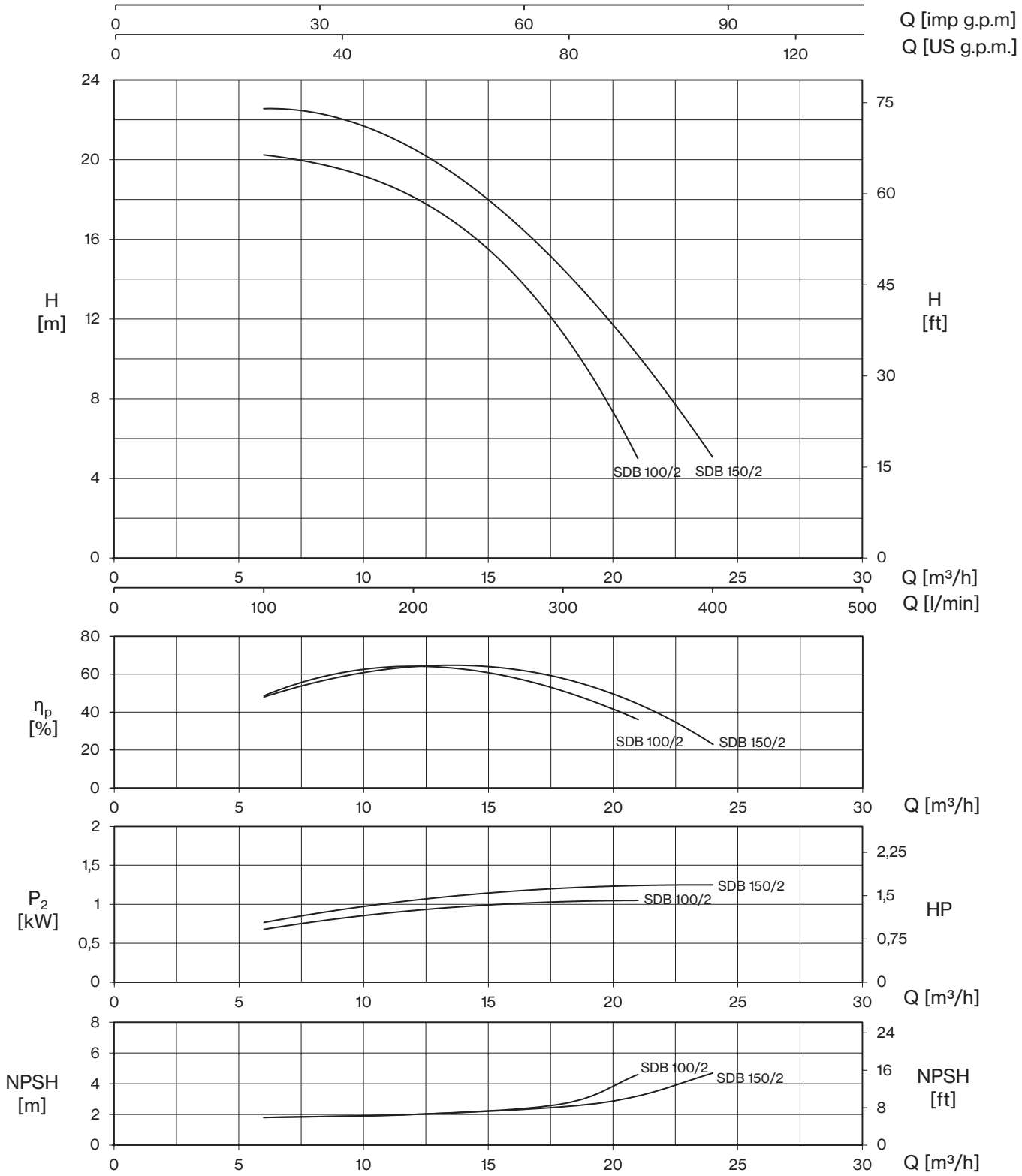

TYPE - 60 Hz		P2		P1		CURRENT		Q (m³/h - l/min)					
1~	3~			1~	3~	1~ 220V	3~ 380V	0	6	12	18	21	24
								0	100	200	300	350	400
		HP	kW	kW		A		H (m)					
SDB 100/2	-	1,5	1,1	1,3	-	6,5	-	19,8	20,2	18,1	11,3	5,0	
SDB 150/2	**SDB 150/2T**	1,8	1,3	1,6	1,5	7,5	3,4	22,0	22,5	20,6	14,3	10,4	5,0

SD

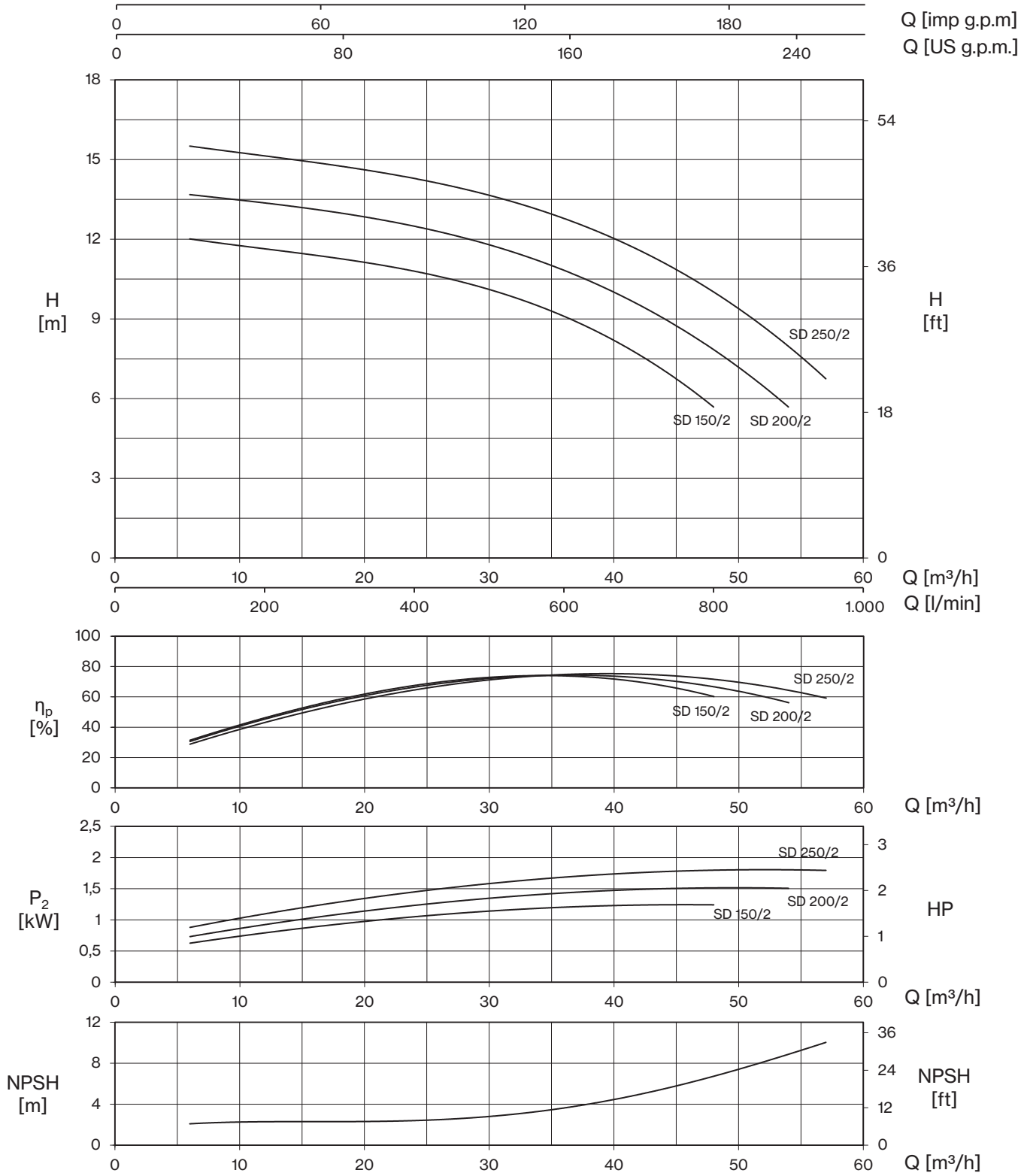

TYPE - 60 Hz		P2		P1		CURRENT		Q (m³/h - l/min)									
1~	3~			1~	3~	1~ 220V	3~ 380V	0	6	18	24	30	36	42	48	54	57
								0	100	300	400	500	600	700	800	900	950
		HP	kW	kW		A		H (m)									
SD 150/2	**SD 150/2T**	1,8	1,3	1,6	1,5	7,5	3,4	12,0	12,0	11,2	10,8	10,2	9,1	7,6	5,7		
SD 200/2	**SD 200/2T**	2	1,5	1,8	1,8	8,6	3,8	13,8	13,7	12,9	12,5	11,9	10,9	9,5	7,7	5,8	
SD 250/2	**SD 250/2T**	2,5	1,84	2,2	2,1	10,4	4,3	15,6	15,6	14,6	14,3	13,8	12,9	11,6	9,9	7,9	6,9

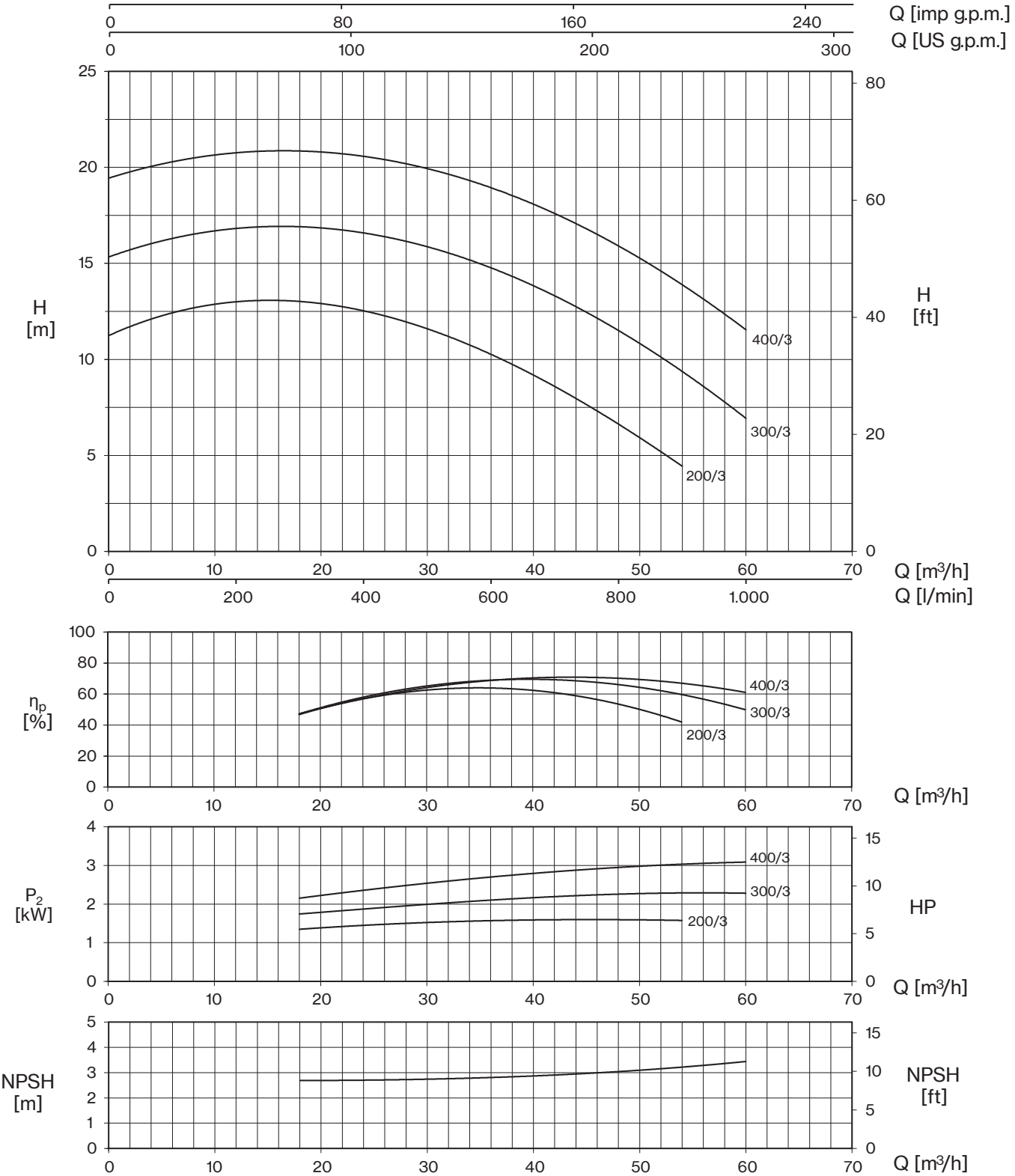

TYPE - 60 Hz		P2		P1		CURRENT		Q (m³/h - l/min)								
1~	3~			1~	3~	1~ 220V	3~ 380V	0	18	24	30	36	42	48	54	60
								0	300	400	500	600	700	800	900	1000
		HP	kW	kW		A		H (m)								
SD 200/3	**SD 200/3T**	2	1,5	2,0	1,9	9,7	3,8	11,3	12,9	12,6	11,7	10,3	8,5	6,6	4,5	
SD 300/3	**SD 300/3T**	3	2,2	2,8	2,7	13,8	5,3	15,4	16,8	16,7	15,9	14,8	13,4	11,4	9,3	7,0
-	**SD 400/3T**	4	3	-	3,5	-	6,7	19,5	20,8	20,6	20,0	18,9	17,6	15,9	13,9	11,6

SD

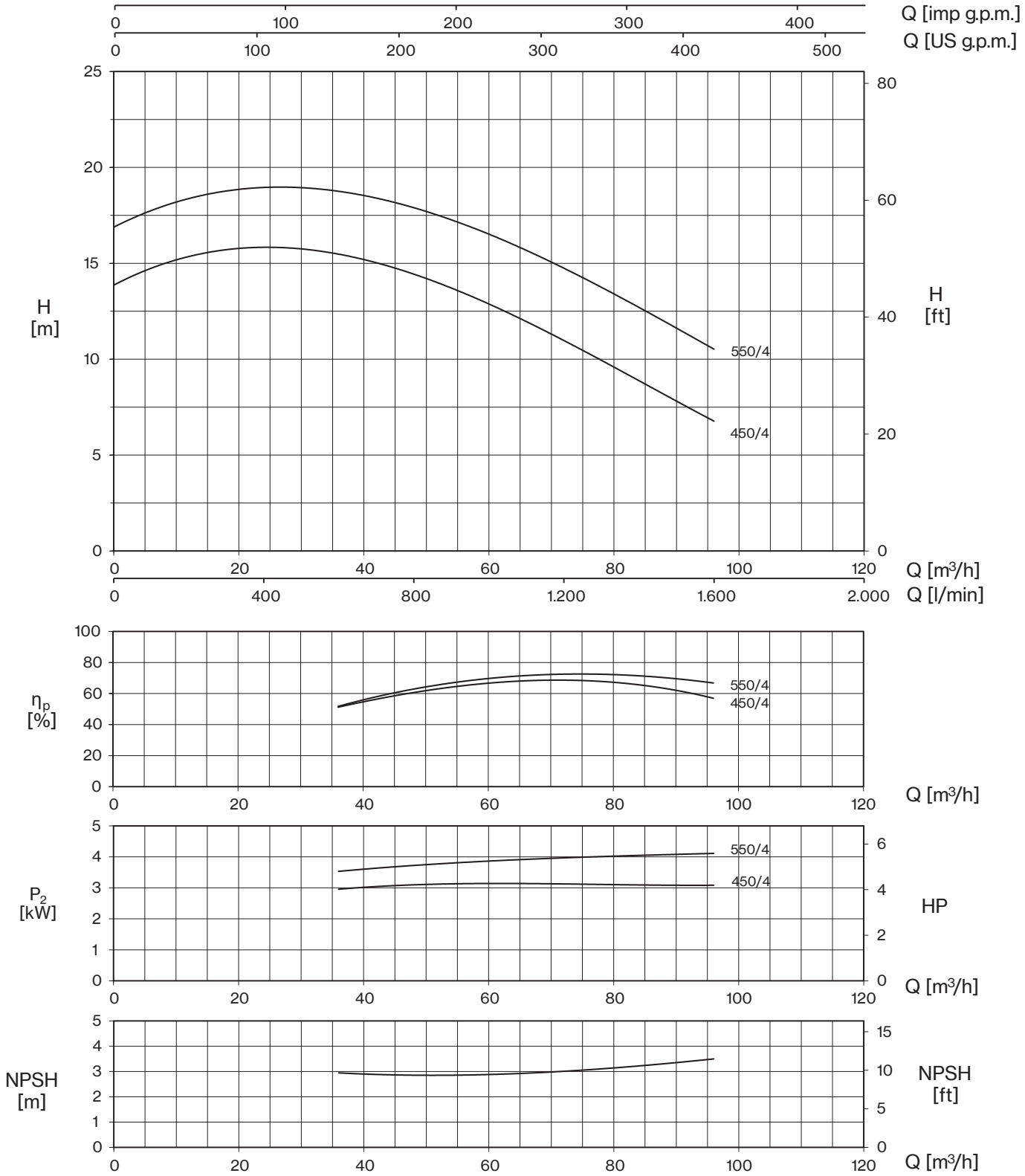

TYPE - 60 Hz		P2		P1		CURRENT		Q (m³/h - l/min)						
1~	3~			1~	3~	1~ 220V	3~ 380V	0	36	48	60	72	84	96
								0	600	800	1000	1200	1400	1600
		HP	kW	kW		A		H (m)						
SD 450/4	**SD 450/4T**	4	3	3,6	3,6	17,2	6,7	13,9	15,4	14,6	12,8	10,9	9,0	6,7
-	**SD 550/4T**	5,5	4	-	4,7	-	8,9	16,9	18,7	18,0	16,4	14,8	12,7	10,5

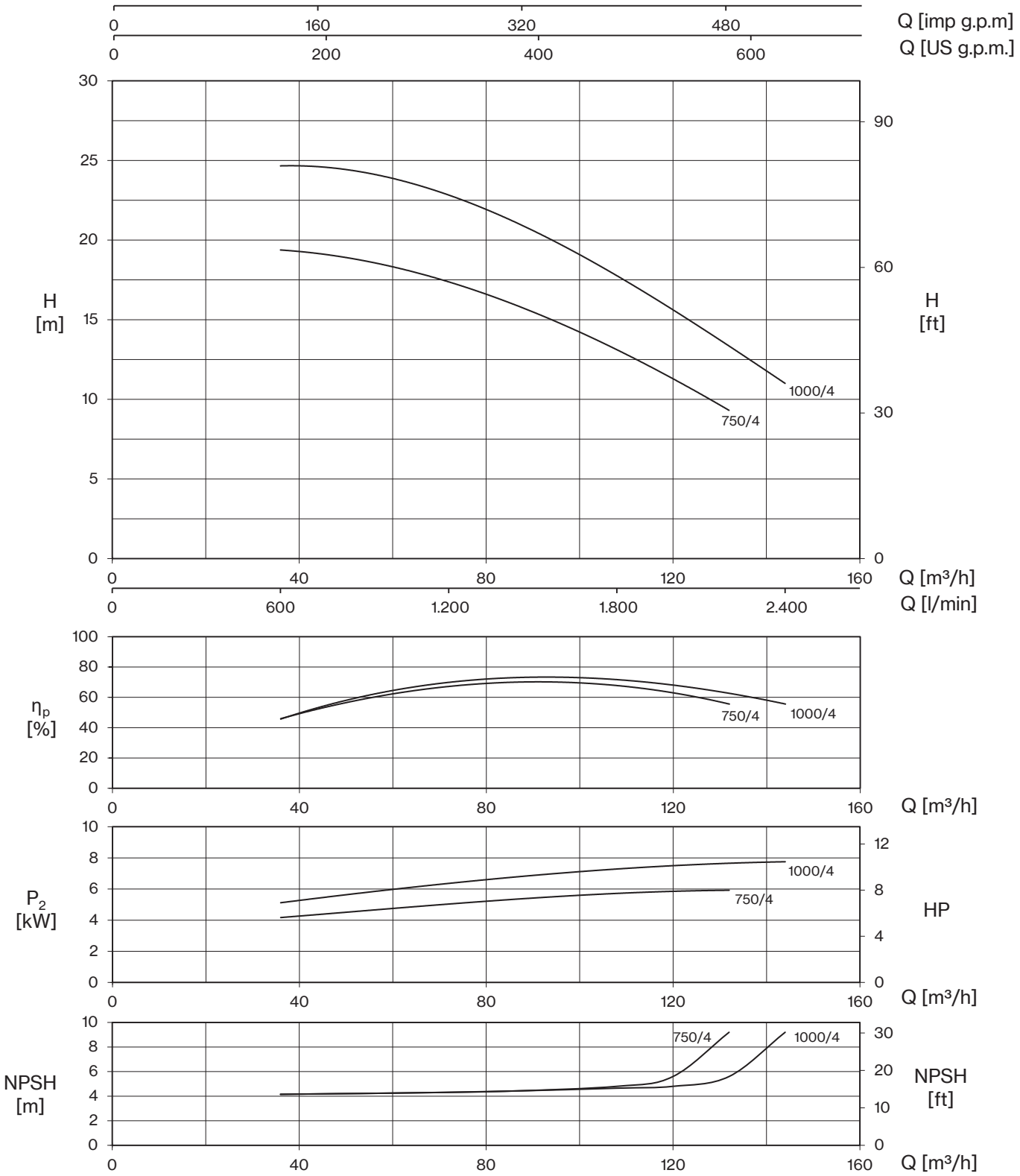

TYPE - 60 Hz	P2		P1	CURRENT	Q (m³/h - l/min)								
3~				3~ 400V	0	36	48	60	84	108	120	132	144
					0	600	800	1000	1400	1800	2000	2200	2400
	HP	kW	kW	A	H (m)								
SD 750/4T	7,5	5,5	6,6	12,1	17,2	19,3	19,1	18,4	16,0	13,1	11,5	9,2	
SD 1000/4T	10	7,5	8,6	16,0	21,1	24,6	24,6	23,9	21,3	17,8	15,7	13,3	11,0

SD

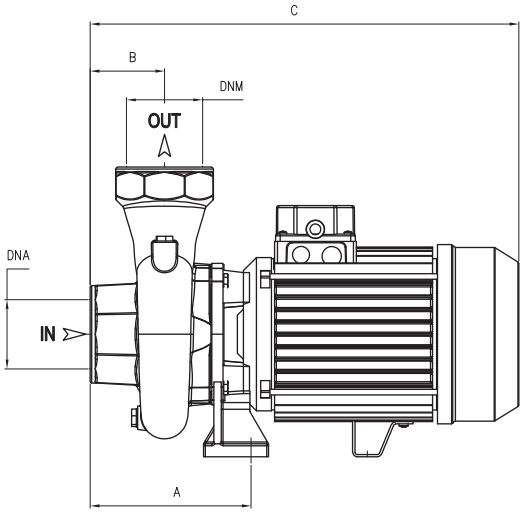

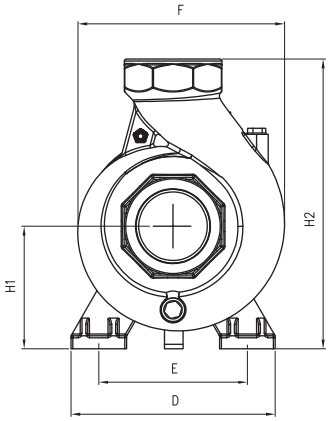

TYPE		DIMENSIONS (mm)													Kg	
1~	3~	A	B	C	D	E	F	H1	H2	DNA	DNM	I	L	M	1~	3~
SD 80/2	**SD 80/2T**	127	45	315	155	115	178	97	247	2” G	2” G	340	195	280	14,5	14
SD 100/2	**SD 100/2T**	127	45	315	155	115	178	97	247			340	195	280	16	15
SD 120/2	**SD 120/2T**	127	45	315	155	115	178	97	247			340	195	280	16	15,5
SDB 100/2	**-**	130	70	395	180	130	195	90	240	2” G	2” G	420	230	309	23	-
SDB 150/2	**SDB 150/2T**	130	70	395	180	130	195	90	240			420	230	309	23	23
SD 150/2	**SD 150/2T**	150	53	400	180	140	218	115	285	2" G	2" G	420	230	309	26	27
SD 200/2	**SD 200/2T**	150	53	400	180	140	218	115	285			420	230	309	26	27
SD 250/2	**SD 250/2T**	150	53	400	180	140	218	115	285			420	230	309	27	27,5
SD 200/3	**SD 200/3T**	176,5	80	485	184	130	225	112	292	3” G	3” G	520	235	320	33	27,5
SD 300/3	**SD 300/3T**	176,5	80	485	184	130	225	112	292			520	235	320	33	30
-	**SD 400/3T**	176,5	80	485	184	130	225	112	292			520	235	320	-	36,5
SD 450/4	**SD 450/4T**	165	85	515	200	150	250	130	330	4” G	4” G	546	265	355	46,5	42
-	**SD 550/4T**	165	85	515	200	150	250	130	330			546	265	355	-	46,5
-	**SD 750/4T**	117	83	559	215	170	254	134	333	4” G	4” G	627	287	408	-	56,5
-	**SD 1000/4T**	117	83	559	215	170	254	134	333			627	287	408	-	62,5

SC

Threaded Centrifugal

Centrifugal pumps characterized by medium flow rate and stable head as the flow rate changes. Suitable for flood and sprinkler irrigation, water withdrawal from reservoirs or canals and industrial applications.

Construction features	
Pump body	cast iron
Motor bracket	cast iron
Impeller	cast iron
Mechanical seal	ceramic-graphite-NBR
Motor shaft	stainless steel AISI 303
Liquid temperature	0 - 90 °C
Operating pressure	max 6 bar

Motor	
2 poles induction motor	3~ 220/380V - 60Hz 1~ 220V - 60Hz (with thermal protection)
Insulation class	F
Protection degree	IPX4

SC 300 T — motor: 1~ / **T** 3~

pump type

LOTS				
TYPE	TRUCK		CONTAINER	
	PALLET (cm)	N° pumps	PALLET (cm)	N° pumps
SC 300÷550(T)	85×110×150	30	85×110×180	30

SC

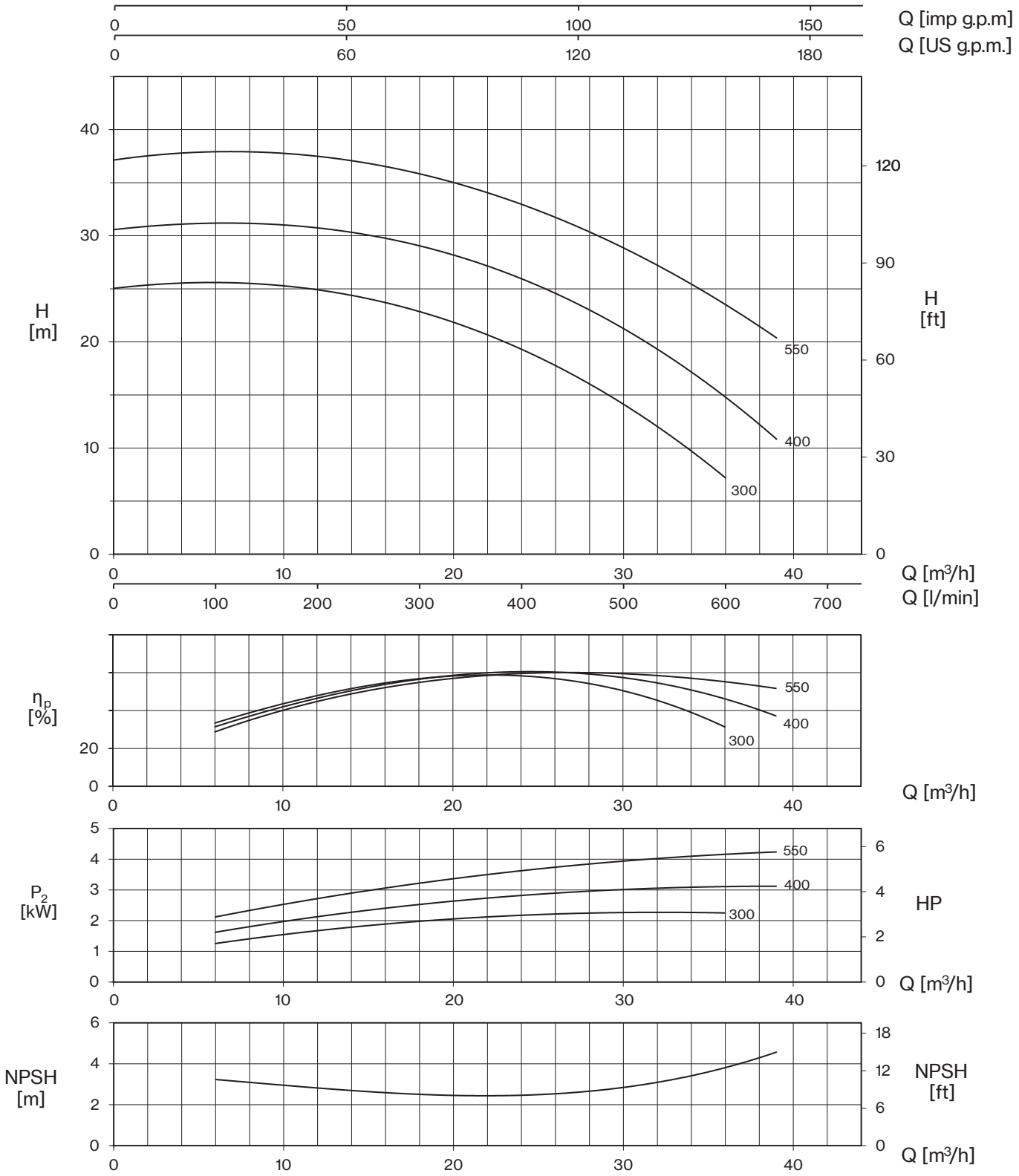

TYPE - 60 Hz		P2		P1		CURRENT		Q (m³/h - l/min)								
1~	3~			1~	3~	1~ 220V	3~ 380V	0	6	12	18	24	30	33	36	39
								0	100	200	300	400	500	550	600	650
		HP	kW	kW		A		H (m)								
SC 300	**SC 300T**	3	2,2	2,7	2,6	13,7	5,3	25,0	25,6	25,0	22,8	19,3	14,2	10,8	7,2	
SC 400	**SC 400T**	4	3	3,6	3,6	17,0	6,8	30,6	31,1	30,9	29,0	25,9	21,3	18,3	14,7	10,8
-	**SC 550T**	5,5	4	-	4,8	-	9,2	37,3	37,7	37,5	36,0	33,1	28,8	26,1	23,6	20,5

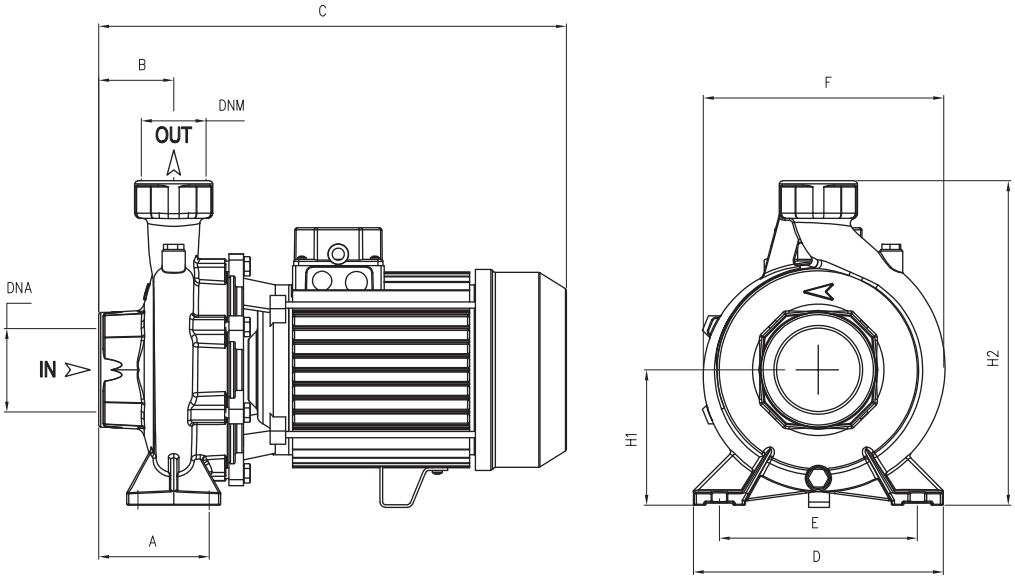

TYPE		DIMENSIONS (mm)													Kg
1~	3~	A	B	C	D	E	F	H1	H2	DNA	DNM	I	L	M	
SC 300	-	105	70	465	240	190	240	126	306			530	280	355	38
-	**SC 300T**	105	70	425	240	190	240	126	306			530	280	355	35
SC 400	-	105	70	480	240	190	240	126	306	3” G	2” G	530	280	355	45,5
-	**SC 400T**	105	70	465	240	190	240	126	306			530	280	355	38,5
-	**SC 550T**	105	70	480	240	190	240	126	306			530	280	355	45

SE

Threaded Centrifugal

Centrifugal pumps characterized by medium flow rate and stable head as the flow rate changes. Suitable for flood and sprinkler irrigation, water withdrawal from reservoirs or canals and industrial applications.

Construction features

Pump body	cast iron
Motor bracket	cast iron
Impeller	brass
Mechanical seal	ceramic-graphite-NBR
Motor shaft	stainless steel AISI 303
Liquid temperature	0 - 90 °C
Operating pressure	max 6 bar

Motor

2 poles induction motor	3~ 220/380V - 60Hz 1~ 220V - 60Hz (with thermal protection up to MEC 80)
Insulation class	F
Protection degree	IPX4

SE 160 T

- motor: 1~ / T 3~
- pump type

LOTS				
TYPE	TRUCK		CONTAINER	
	PALLET (cm)	N° pumps	PALLET (cm)	N° pumps
SE 160÷210(T)	85×110×170	40	85×110×200	48
SE 310	80×120×145	24	80×120×175	30
SE 310T	85×110×170	40	85×110×200	48

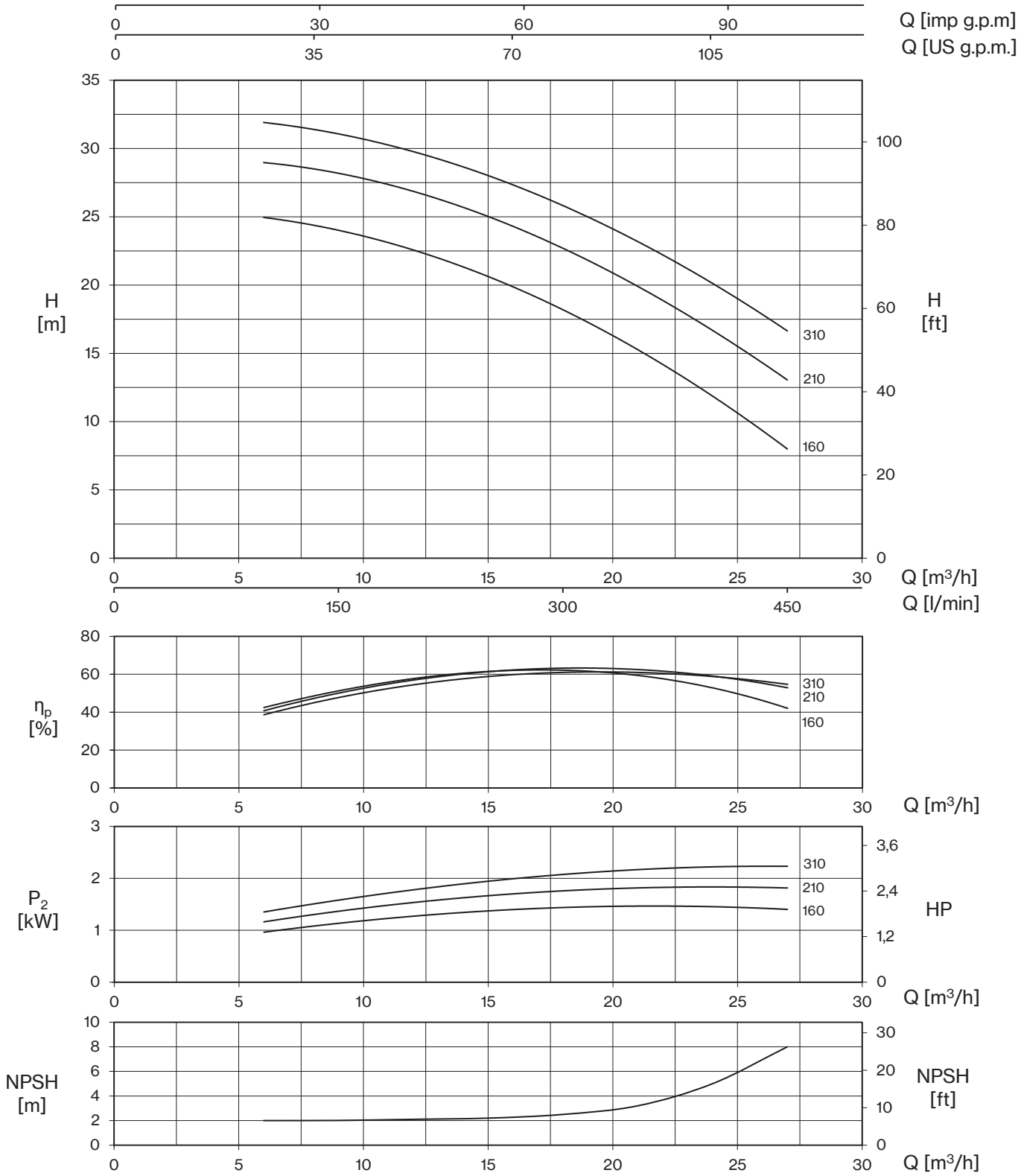

TYPE - 60 Hz		P2		P1		CURRENT		Q (m³/h - l/min)								
1~	3~			1~	3~	1~ 220V	3~ 380V	0	6	9	12	15	18	21	24	27
								0	100	150	200	250	300	350	400	450
		HP	kW	kW		A		H (m)								
SE 160	**SE 160T**	2	1,5	1,8	1,7	8,6	3,6	25,1	24,9	24,1	22,6	20,6	18,2	15,3	11,9	8,0
SE 210	**SE 210T**	2,5	1,84	2,3	2,1	10,9	4,3	29,0	29,0	28,2	26,9	25,0	22,6	19,9	16,8	13,0
SE 310	**SE 310T**	3	2,2	2,8	2,5	14,8	5,1	31,9	31,9	31,1	29,8	28,0	25,7	23,2	20,3	16,6

SE

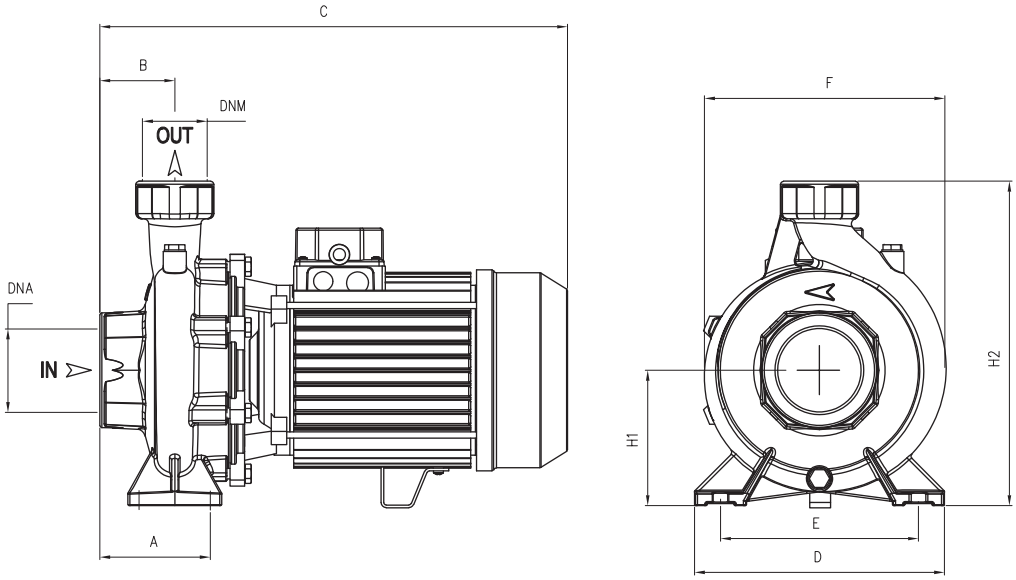

TYPE		DIMENSIONS (mm)													Kg	
1~	3~	A	B	C	D	E	F	H1	H2	DNA	DNM	I	L	M	1~	3~
SE 160	**SE 160T**	105	48	395	200	160	215	110	285	2” G	2” G	420	230	309	26	27,5
SE 210	**SE 210T**	105	48	395	200	160	215	110	285			420	230	309	27	26,5
SE 310	**-**	105	48	465	200	160	215	110	285			520	235	320	35	-
-	**SE 310T**	105	48	395	200	160	215	110	285			420	230	309	-	27,5

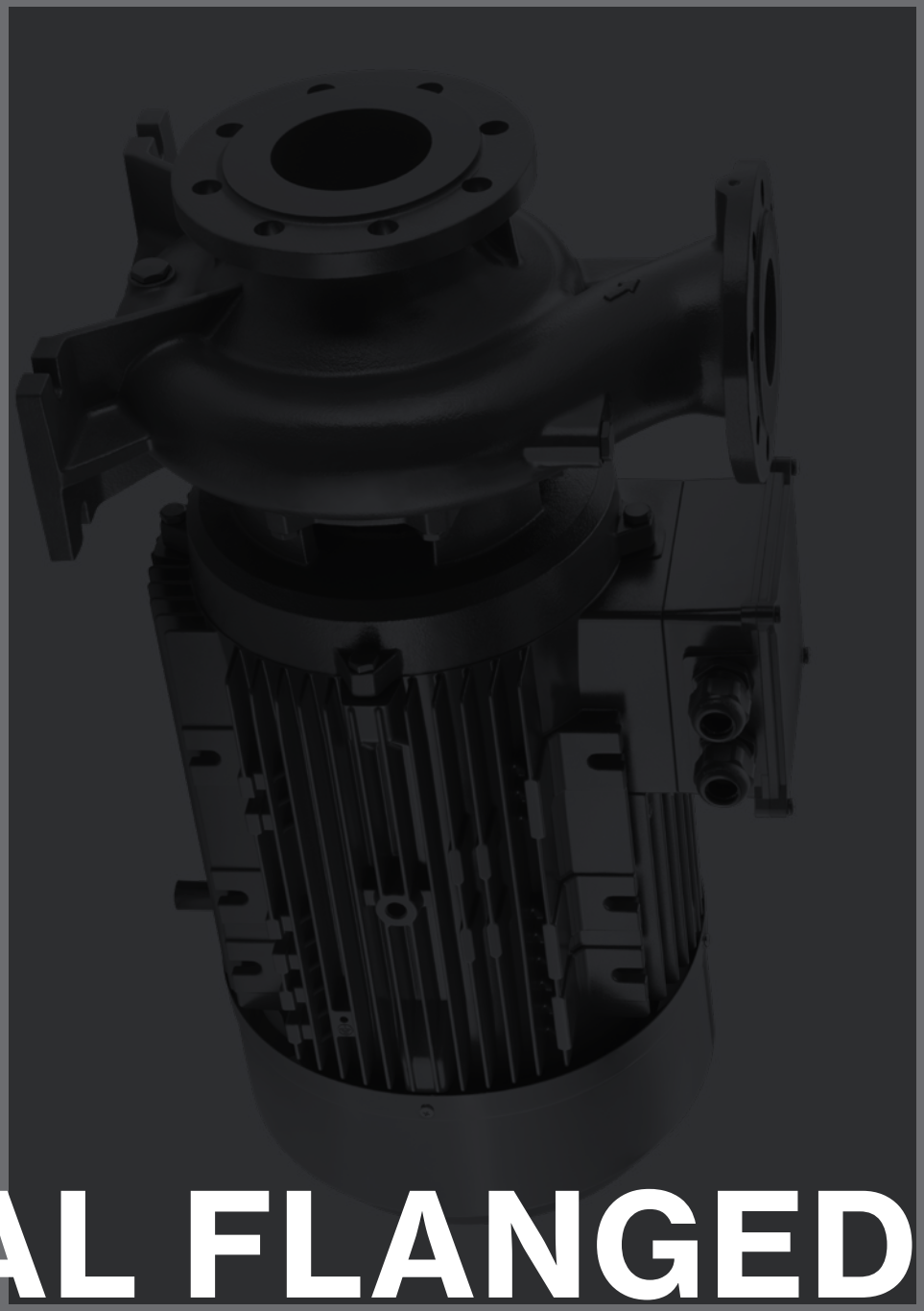

CENTRIFUGAL FLANGED

CENTRIFUGAL FLANGED PUMPS

MN EN 733

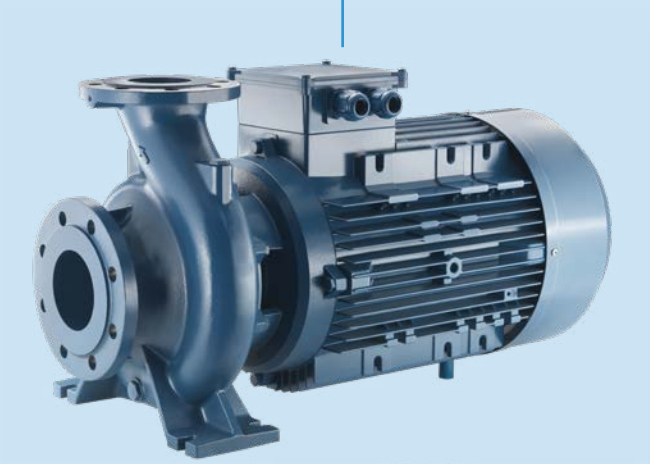

MNG-MNGX

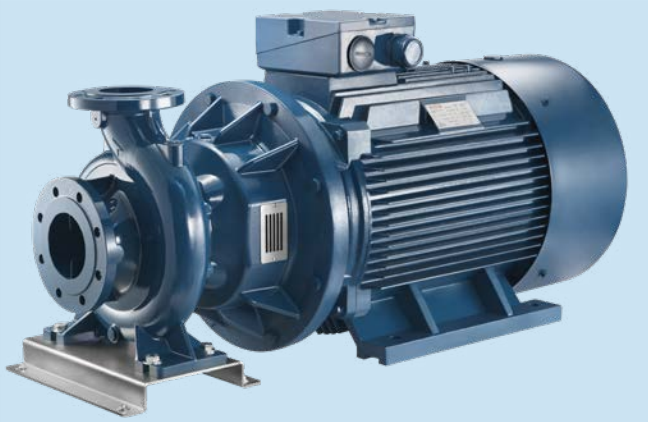

MA-4MA

MAX-4MAX

Wide range of centrifugal free axle and monobloc pumps, flanged with axial suction with hydraulic part entirely made of cast iron (MN, MNG, MA) and AISI 316 (MAX).

Applications:

- Water supply
- Pressurization
- Circulation of water in heating and air conditioning systems
- Fluid transfer in industry and agriculture

MN-MNG-MA

Centrifugal Flanged
EN 733

2 poles

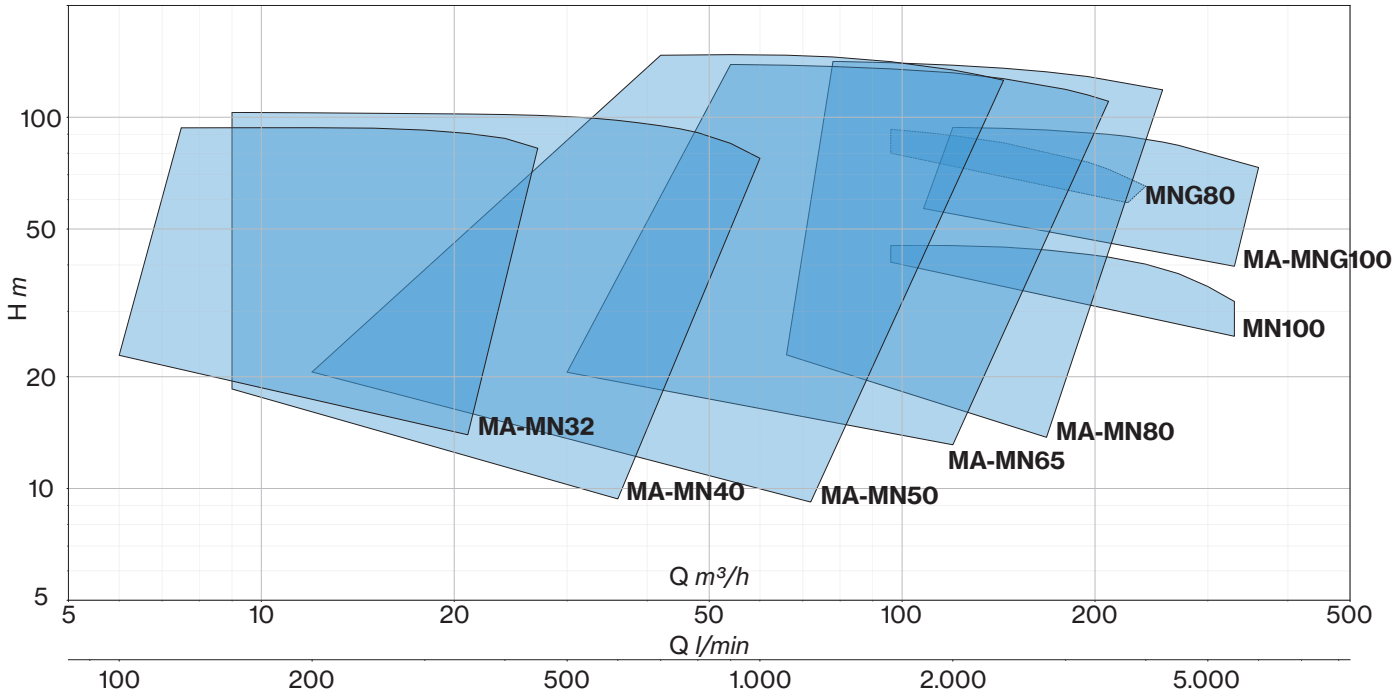

4 poles

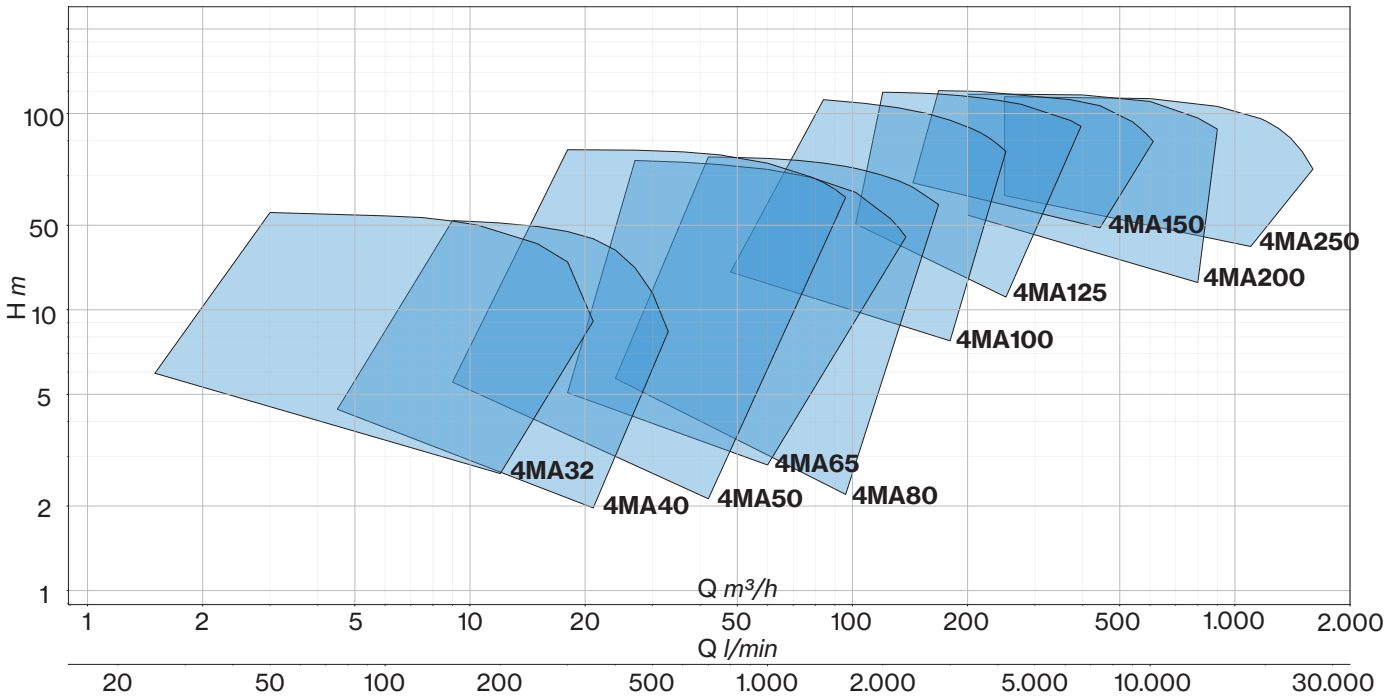

MN-MNG-MA-4MA

Centrifugal Flanged EN 733

MN: Front suction close-coupled centrifugal pumps with close impeller mounted on IE3 motor shaft extension. Pump casing with axial suction and radial delivery on top, main dimensions and performance according to EN 733.

MNG-MNGX: Front suction centrifugal pumps connected to IE3 standard motor (stub-shaft construction). Pump casing with axial suction and radial delivery on top, main dimensions and performance according to EN 733.

MA-MAX-4MA-4MAX: Single-stage end-suction centrifugal frame-mounted pumps. Dimensions in accordance with EN 733.

TYPE	2 POLES							4 POLES			
	MN	MNG	MNGX	MA	MAT MAX MATX	Flow rate	Head	4MA 4MAT	4MAX 4MATX	Flow rate	Head
						m³/h	m			m³/h	m
32-160C	■	-	-	■	■	6 ÷ 21	22,8 ÷ 14	■	■	1,5 ÷ 12	5,9 ÷ 2,6
32-160B	■	-	-	■	■	6 ÷ 24	27,7 ÷ 17	■	■	1,5 ÷ 12	7,2 ÷ 3,6
32-160A	■	-	-	■	■	6 ÷ 27	36,2 ÷ 22,1	■	■	1,5 ÷ 15	8,8 ÷ 4
32-200C	■	-	-	■	■	6 ÷ 27	40,3 ÷ 28,7	■	■	3 ÷ 18	10,8 ÷ 4,2
32-200B1	■	-	-	-	-	6 ÷ 27	48 ÷ 37,9	-	-	-	-
32-200B	■	-	-	■	■	6 ÷ 30	48 ÷ 35,4	■	■	3 ÷ 18	12,7 ÷ 6,3
32-200A1	■	-	-	-	-	6 ÷ 30	58,3 ÷ 46,6	-	-	-	-
32-200A	■	-	-	■	■	6 ÷ 33	58,3 ÷ 44,3	■	■	3 ÷ 21	15,7 ÷ 6,8
32-250C	■	-	-	■	■	6 ÷ 27	72 ÷ 61,3	■	■	3 ÷ 21	17,2 ÷ 6,5
32-250B	■	-	-	■	■	7,5 ÷ 27	84 ÷ 73,2	■	■	3 ÷ 21	20 ÷ 8,3
32-250A1	■	-	-	-	-	7,5 ÷ 27	93,6 ÷ 85,3	-	-	-	-
32-250A	■	-	-	■	■	7,5 ÷ 27	93,6 ÷ 85,5	■	■	3 ÷ 21	22,2 ÷ 9,1
40-125C	■	-	-	■	■	9 ÷ 36	18,5 ÷ 9,4	■	■	4,5 ÷ 21	4,4 ÷ 2
40-125B	■	-	-	■	■	9 ÷ 39	23,4 ÷ 13,2	■	■	4,5 ÷ 21	5,5 ÷ 3,3
40-125A	■	-	-	■	■	9 ÷ 42	27,6 ÷ 16,8	■	■	4,5 ÷ 24	6,3 ÷ 3,4
40-160B	■	-	-	■	■	9 ÷ 36	29,2 ÷ 20,5	■	■	4,5 ÷ 24	7,5 ÷ 2,5
40-160A	■	-	-	■	■	9 ÷ 42	34,9 ÷ 23,4	■	■	4,5 ÷ 24	8,9 ÷ 4,5
40-160AP	■	-	-	■	■	9 ÷ 48	39,8 ÷ 25,3	■	■	4,5 ÷ 24	11,1 ÷ 6,8
40-200B1	■	-	-	-	-	9 ÷ 39	45,5 ÷ 32,3	-	-	-	-
40-200B	■	-	-	■	■	9 ÷ 42	45,5 ÷ 29,4	■	■	6 ÷ 24	11,4 ÷ 4,7
40-200A1	■	-	-	-	-	9 ÷ 39	56,5 ÷ 44,4	-	-	-	-
40-200A	■	-	-	■	■	9 ÷ 42	56,5 ÷ 41,6	■	■	6 ÷ 24	13,9 ÷ 8,3
40-200AP	■	-	-	■	■	9 ÷ 45	61,4 ÷ 42,2	■	■	6 ÷ 24	14,9 ÷ 9,4
40-250C	■	-	-	■	■	9 ÷ 36	64,4 ÷ 55,4	■	■	9 ÷ 27	15,2 ÷ 6,6
40-250B	■	-	-	■	■	9 ÷ 39	79,9 ÷ 62,1	■	■	9 ÷ 30	18,2 ÷ 8,3
40-250A1	■	-	-	-	-	9 ÷ 42	84,6 ÷ 72,8	-	-	-	-
40-250A	■	-	-	■	■	9 ÷ 45	84,6 ÷ 69	■	■	9 ÷ 33	20,8 ÷ 8,4
40-250BM	■	-	-	■	■	9 ÷ 54	93,2 ÷ 72	-	-	-	-
40-250AM	■	-	-	■	■	9 ÷ 60	103 ÷ 77,5	-	-	-	-
50-125B	■	-	-	■	■	12 ÷ 72	20,6 ÷ 9,2	■	■	9 ÷ 42	5,5 ÷ 2,1
50-125A	■	-	-	■	■	12 ÷ 72	24,3 ÷ 14,2	■	■	9 ÷ 45	6,4 ÷ 2,9
50-160B1	■	-	-	-	-	21 ÷ 66	33,5 ÷ 21,5	-	-	-	-
50-160B	■	-	-	■	■	21 ÷ 72	33,5 ÷ 18,9	■	■	9 ÷ 42	8 ÷ 2,3
50-160A1	■	-	-	-	-	21 ÷ 72	39,8 ÷ 27,6	-	-	-	-
50-160A	■	-	-	■	■	21 ÷ 78	39,8 ÷ 25,4	■	■	9 ÷ 48	9,4 ÷ 3,1
50-200C	■	-	-	■	■	24 ÷ 72	49,7 ÷ 28,9	■	■	9 ÷ 39	12 ÷ 3,2
50-200B	■	-	-	■	■	24 ÷ 72	54,6 ÷ 35	■	■	10,5 ÷ 42	13,1 ÷ 4,2
50-200A1	■	-	-	-	-	24 ÷ 78	61,8 ÷ 39,8	-	-	-	-

TYPE	2 POLES							4 POLES			
	MN	MNG	MNGX	MA	MAT MAX MATX	Flow rate m³/h	Head m	4MA 4MAT	4MAX 4MATX	Flow rate m³/h	Head m
50-200A	■	-	-	■	■	24 ÷ 78	61,8 ÷ 39,8	■	■	10,5 ÷ 45	14,7 ÷ 4,6
50-250C1	■	-	-	-	-	27 ÷ 60	68,2 ÷ 56,2	-	-	-	-
50-250C	■	-	-	■	■	27 ÷ 66	68,2 ÷ 52,1	■	■	12 ÷ 45	17,7 ÷ 7,5
50-250B	■	-	-	■	■	27 ÷ 72	78,4 ÷ 58,5	■	■	12 ÷ 48	20 ÷ 8,2
50-250A	■	-	-	■	■	27 ÷ 78	88,3 ÷ 61,8	■	■	12 ÷ 54	22,9 ÷ 8,4
50-315DN	-	-	-	■	-	42 ÷ 132	90,4 ÷ 73,4	-	-	-	-
50-315C	-	-	-	-	-	-	-	■	■	18 ÷ 84	24,7 ÷ 16,8
50-315CN	-	-	-	■	-	42 ÷ 132	105 ÷ 88,7	-	-	-	-
50-315B	-	-	-	-	-	-	-	■	■	18 - 90	31,4 - 21,6
50-315BN	-	-	-	■	-	42 ÷ 144	124,3 ÷ 103,5	-	-	-	-
50-315A	-	-	-	-	-	-	-	■	■	18 - 96	37,2 - 25,1
50-315AN	-	-	-	■	-	42 ÷ 144	146,9 ÷ 125,8	-	-	-	-
65-125B1	■	-	-	-	-	30 ÷ 108	20,6 ÷ 15	-	-	-	-
65-125B	■	-	-	■	■	30 ÷ 120	20,6 ÷ 13,1	■	■	18 ÷ 60	5,1 ÷ 2,8
65-125A1	■	-	-	-	-	30 ÷ 120	25,2 ÷ 18,8	-	-	-	-
65-125A	■	-	-	■	■	30 ÷ 132	25,2 ÷ 16,8	■	■	18 ÷ 72	6,3 ÷ 3
65-160C	■	-	-	■	■	42 ÷ 144	30,6 ÷ 13,9	■	■	24 ÷ 78	7,6 ÷ 2,9
65-160B	■	-	-	■	■	42 ÷ 144	35,1 ÷ 20,4	■	■	24 ÷ 78	8,6 ÷ 3,6
65-160A1	■	-	-	-	-	42 ÷ 138	42,5 ÷ 31,7	-	-	-	-
65-160A	■	-	-	■	■	42 ÷ 144	42,5 ÷ 30,9	■	■	24 ÷ 84	9,9 ÷ 4,6
65-200C1	■	-	-	-	-	54 ÷ 132	46,1 ÷ 28,9	-	-	-	-
65-200C	■	-	-	■	■	54 ÷ 138	46,1 ÷ 26,8	■	■	27 ÷ 84	11,6 ÷ 5
65-200B	■	-	-	■	■	54 ÷ 144	53,9 ÷ 34,6	■	■	27 ÷ 84	13,1 ÷ 7
65-200A	■	-	-	■	■	54 ÷ 144	61,8 ÷ 44,4	■	■	27 ÷ 84	14,8 ÷ 9,3
65-250B	■	-	-	■	■	54 ÷ 144	80,6 ÷ 47,3	■	■	27 ÷ 84	21 ÷ 8,7
65-250A	■	-	-	■	■	54 ÷ 150	91,6 ÷ 57,9	■	■	30 ÷ 90	22,9 ÷ 8,8
65-315CM	-	-	-	-	-	-	-	■	■	27 ÷ 126	23,5 ÷ 13,9
65-315CN	-	-	-	■	-	54 ÷ 180	96,5 ÷ 80,8	-	-	-	-
65-315BM	-	-	-	-	-	-	-	■	■	27 ÷ 132	28,9 ÷ 17,2
65-315BN	-	-	-	■	-	54 ÷ 195	117,9 ÷ 96,3	-	-	-	-
65-315AM	-	-	-	-	-	-	-	■	■	27 ÷ 138	34 ÷ 18,2
65-315AN	-	-	-	■	-	54 ÷ 210	138,8 ÷ 110,4	-	-	-	-
80-160E	■	-	-	■	■	66 ÷ 168	22,9 ÷ 13,7	■	■	24 ÷ 96	5,7 ÷ 2,2
80-160D	■	-	-	■	■	66 ÷ 180	27,3 ÷ 16,4	■	■	27 ÷ 102	6,8 ÷ 2,6
80-160C1	■	-	-	-	-	66 ÷ 195	30,9 ÷ 18,4	-	-	-	-
80-160C	■	-	-	■	■	66 ÷ 195	30,9 ÷ 18,4	■	■	30 ÷ 108	7,4 ÷ 3,1
80-160B	■	-	-	■	■	66 ÷ 210	35,9 ÷ 22	■	■	33 ÷ 120	8,9 ÷ 3,5
80-160A	■	-	-	■	■	66 ÷ 225	40,5 ÷ 23,9	■	■	36 ÷ 132	9,8 ÷ 3,8
80-200B	■	-	-	■	■	72 ÷ 225	54,5 ÷ 38,5	■	■	42 ÷ 132	13,1 ÷ 7,1
80-200A	■	-	-	■	■	72 ÷ 240	61,7 ÷ 43,9	■	■	42 ÷ 144	14,7 ÷ 7,5
80-250B	-	■	■	■	■	96 ÷ 225	80 ÷ 58,8	■	■	42 ÷ 132	19,2 ÷ 11,1
80-250A	-	■	■	■	■	96 ÷ 240	92,8 ÷ 65,2	■	■	42 ÷ 144	22,9 ÷ 12,6
80-315B	-	-	-	-	-	-	-	■	■	42 ÷ 150	28,3 ÷ 19,9
80-315A	-	-	-	-	-	-	-	■	■	42 ÷ 168	35 ÷ 23,7
100-160B	■	-	-	-	-	96 ÷ 330	40,7 ÷ 25,7	-	-	-	-
100-160A	■	-	-	-	-	96 ÷ 330	45,1 ÷ 31,9	-	-	-	-
100-200D	-	-	-	■	■	108 ÷ 300	43,1 ÷ 26,6	■	■	48 ÷ 168	10,8 ÷ 4,8
100-200C	-	-	-	■	■	108 ÷ 330	48,4 ÷ 28,1	■	■	48 ÷ 168	12 ÷ 6,3
100-200B	-	■	■	■	■	108 ÷ 330	56,8 ÷ 39,7	■	■	48 ÷ 180	13,6 ÷ 7,8
100-200A	-	■	■	■	■	108 ÷ 360	62,2 ÷ 42,5	■	■	48 ÷ 192	15,4 ÷ 9,1
100-250E	-	-	-	-	-	-	-	■	■	60 ÷ 180	16,9 ÷ 11,4
100-250D	-	-	-	-	-	-	-	■	■	60 ÷ 192	19,6 ÷ 12,7
100-250C	-	■	■	■	■	120 ÷ 300	73,2 ÷ 61	-	-	-	-
100-250B	-	■	■	■	■	120 ÷ 330	83,7 ÷ 67,6	-	-	-	-

TYPE	2 POLES							4 POLES			
	MN	MNG	MNGX	MA	MAT MAX MATX	Flow rate	Head	4MA 4MAT	4MAX 4MATX	Flow rate	Head
						m³/h	m			m³/h	m
100-250A	-	■	■	■	■	120 ÷ 360	93,9 ÷ 73,2	■	■	60 ÷ 204	22,3 ÷ 13,8
100-315B	-	-	-	-	-	-	-	■	■	72 ÷ 216	31,4 ÷ 17,9
100-315A	-	-	-	-	-	-	-	■	■	72 ÷ 216	36,5 ÷ 23,1
100-400C	-	-	-	-	-	-	-	■	■	84 ÷ 228	40,6 ÷ 25,8
100-400B	-	-	-	-	-	-	-	■	■	84 ÷ 240	48,7 ÷ 31,6
100-400A	-	-	-	-	-	-	-	■	■	84 ÷ 252	56 ÷ 36,7
125-250B	-	-	-	-	-	-	-	■	■	102 ÷ 252	20,2 ÷ 11,1
125-250A	-	-	-	-	-	-	-	■	■	102 ÷ 276	24 ÷ 14,7
125-315C	-	-	-	-	-	-	-	■	■	120 ÷ 348	25,8 ÷ 15,7
125-315B	-	-	-	-	-	-	-	■	■	120 ÷ 372	33 ÷ 22,2
125-315A	-	-	-	-	-	-	-	■	■	120 ÷ 372	39,6 ÷ 28,2
125-400C	-	-	-	-	-	-	-	■	■	120 ÷ 372	47,6 ÷ 33,8
125-400B	-	-	-	-	-	-	-	■	■	120 ÷ 396	54,5 ÷ 39,1
125-400A	-	-	-	-	-	-	-	■	■	120 ÷ 396	59,5 ÷ 45
150-315D	-	-	-	-	-	-	-	■	■	144 ÷ 444	28,3 ÷ 19,6
150-315C	-	-	-	-	-	-	-	■	■	144 ÷ 492	32,2 ÷ 21,8
150-315B	-	-	-	-	-	-	-	■	■	144 ÷ 540	36,3 ÷ 23,6
150-315A	-	-	-	-	-	-	-	■	■	144 ÷ 564	41 ÷ 27,2
150-400C	-	-	-	-	-	-	-	■	■	168 ÷ 564	47,8 ÷ 28,7
150-400B	-	-	-	-	-	-	-	■	■	168 ÷ 588	54,4 ÷ 34,3
150-400A	-	-	-	-	-	-	-	■	■	168 ÷ 612	60,3 ÷ 39,8
Not envisaged in the EN 733 standard											
200-315D	-	-	-	-	-	-	-	■	■	200 ÷ 800	21,7 ÷ 12,5
200-315C	-	-	-	-	-	-	-	■	■	200 ÷ 850	26,6 ÷ 14,6
200-315B	-	-	-	-	-	-	-	■	■	200 ÷ 900	33,4 ÷ 16,7
200-315A	-	-	-	-	-	-	-	■	■	200 ÷ 900	35,9 ÷ 19,8
200-400C	-	-	-	-	-	-	-	■	■	200 ÷ 800	44,1 ÷ 31,5
200-400B	-	-	-	-	-	-	-	■	■	200 ÷ 850	50,8 ÷ 36,6
200-400A	-	-	-	-	-	-	-	■	■	200 ÷ 900	58,5 ÷ 44
250-315C	-	-	-	-	-	-	-	■	■	250 ÷ 1100	25,5 ÷ 16,8
250-315B	-	-	-	-	-	-	-	■	■	250 ÷ 1170	33 ÷ 19
250-315A	-	-	-	-	-	-	-	■	■	250 ÷ 1200	35 ÷ 20
250-400D	-	-	-	-	-	-	-	■	■	250 ÷ 1300	39,9 ÷ 24,3
250-400C	-	-	-	-	-	-	-	■	■	250 ÷ 1400	45,8 ÷ 27,4
250-400B	-	-	-	-	-	-	-	■	■	250 ÷ 1500	51,7 ÷ 30,3
250-400A	-	-	-	-	-	-	-	■	■	250 ÷ 1600	57,4 ÷ 31,7

MN Series
Models list and materials

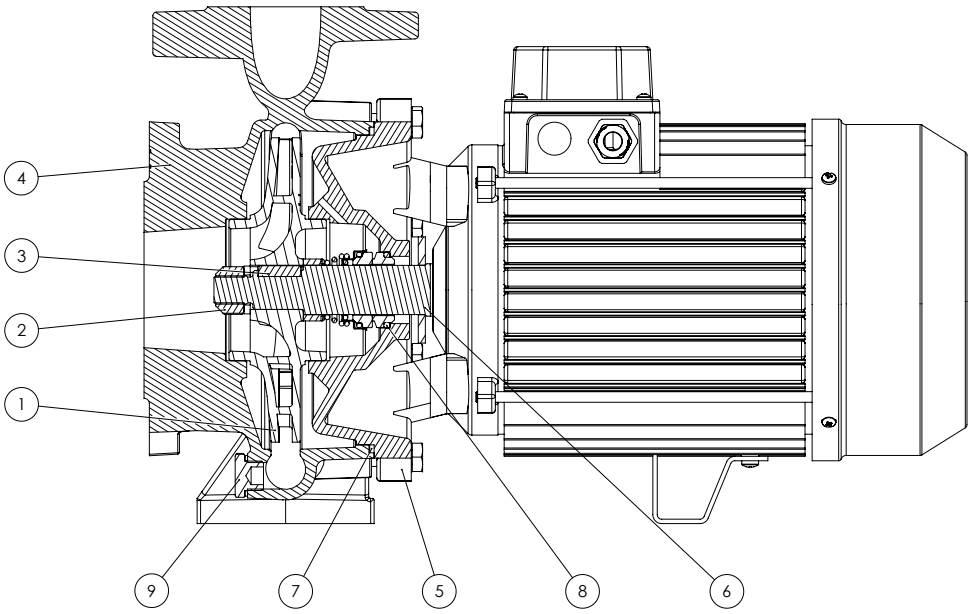

POS. N.	DENOMINATION	VERSION	MATERIAL	REFERENCE STANDARDS	
				EUROPE	USA
1	**Impeller**	Standard	Cast iron G20	GJL-200 (JL1030)	ASTM Class 30
		B	Bronze	CuSn10-C (CC480K)	UNS C90700
		X	Stainless steel	X5CrNiMo17-12-2/ 1.4401	AISI 316
2	**Impeller lock nut and washer**		Stainless steel	X5CrNiMo17-12-2/ 1.4401	AISI 316
3	**Impeller key**		Stainless steel	X5CrNiMo17-12-2/ 1.4401	AISI 316
4	**Volute casing**	Up to 80-200	Cast iron G20	GJL-200 (JL1030)	ASTM Class 30
		From 80-250	Cast iron G25	GJL-250 (JL1040)	ASTM Class 35
5	**Motor bracket**		Cast iron G20	GJL-200 (JL1030)	ASTM Class 30
6	**Shaft extension**		Stainless steel	X5CrNi18-10/ 1.4301	AISI 304
7	**O-ring**	Standard	NBR		
		E	EPDM		
		V	FKM		
8	**Mechanical seal**		(Search for the material in the mechanical seal table)		
9	**Fill and drain plugs**		Brass	CU ZN 40 PB2 UNI 5705/65	C37700

MNG Series
Models list and materials

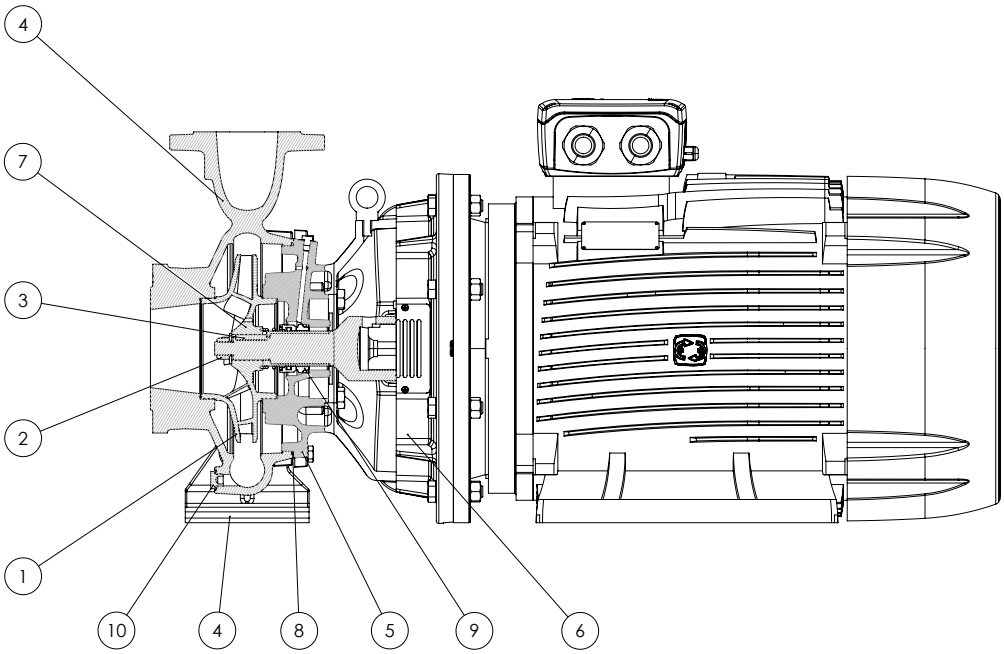

POS. N.	DENOMINATION	VERSION	MATERIAL	REFERENCE STANDARDS	
				EUROPE	USA
1	**Impeller**	Standard	Cast iron G20	GJL-200 (JL1030)	ASTM Class 30
		B	Bronze	CuSn10-C (CC480K)	UNS C90700
		X	Stainless steel	X5CrNiMo17-12-2/ 1.4401	AISI 316
2	**Impeller lock nut and washer**		Stainless steel	X5CrNiMo17-12-2/ 1.4401	AISI 316
3	**Impeller key**		Stainless steel	X5CrNiMo17-12-2/ 1.4401	AISI 316
4	**Volute casing**	Standard	Cast iron G25	GJL-250 (JL1040)	ASTM Class 35
		X	Stainless steel	X5CrNiMo17-12-2/ 1.4401	AISI 316
5	**Casing cover**	Standard	Cast iron G20	GJL-200 (JL1030)	ASTM Class 30
		X	Stainless steel	X5CrNiMo17-12-2/ 1.4401	AISI 316
6	**Motor bracket**		Cast iron G20	GJL-200 (JL1030)	ASTM Class 30
7	**Stub shaft**		Stainless steel	X5CrNiMo17-12-2/ 1.4401	AISI 316
8	**O-ring**	Standard	NBR		
		E	EPDM		
		V	FKM		
9	**Mechanical seal**		(Search for the material in the mechanical seal table)		
10	**Fill and drain plugs**	Fill and drain plugs	Brass	CU ZN 40 PB2 UNI 5705/65	C37700

MA-4MA Series
Models list and materials

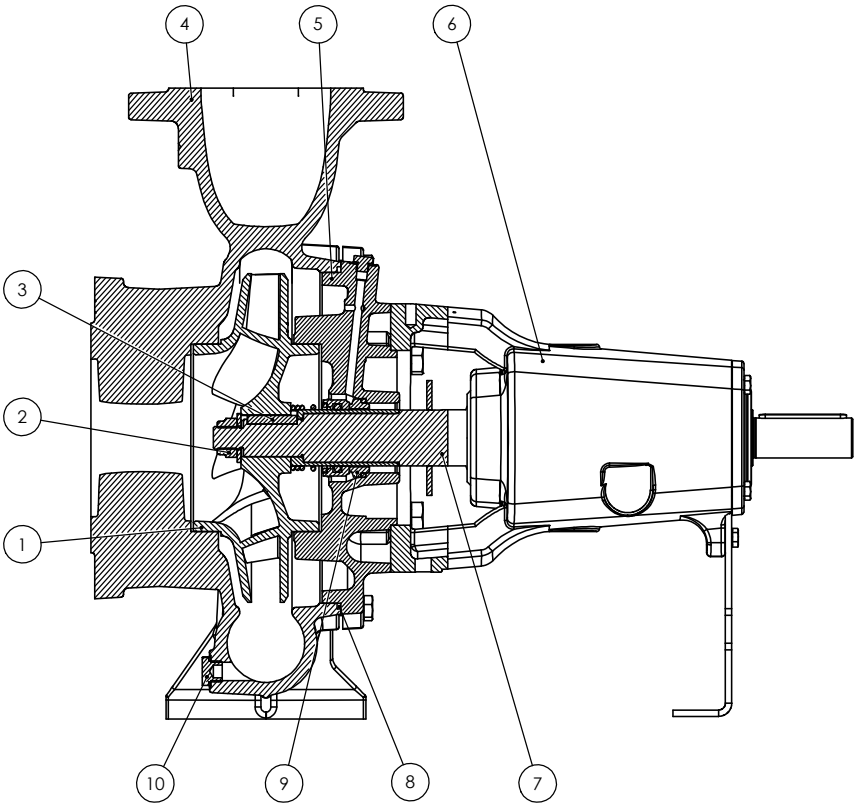

POS. N.	DENOMINATION	VERSION	MATERIAL	REFERENCE STANDARDS	
				EUROPE	USA
1	**Impeller**	Standard	Cast iron G20	GJL-200 (JL1030)	ASTM Class 30
		B	Bronze	CuSn10-C (CC480K)	UNS C90700
		X	Stainless steel	X5CrNiMo17-12-2/ 1.4401	AISI 316
2	**Impeller lock nut and washer**		Stainless steel	X5CrNiMo17-12-2/ 1.4401	AISI 316
3	**Impeller key**		Stainless steel	X5CrNiMo17-12-2/ 1.4401	AISI 316
4	**Volute casing**	Up to 80-200	Cast iron G20	GJL-200 (JL1030)	ASTM Class 30
		From 80-250	Cast iron G25	GJL-250 (JL1040)	ASTM Class 35
		X	Stainless steel	X5CrNiMo17-12-2/ 1.4401	AISI 316
5	**Casing cover**	Standard	Cast iron G20	GJL-200 (JL1030)	ASTM Class 30
		X	Stainless steel	X5CrNiMo17-12-2/ 1.4401	AISI 316
6	**Bracket**		Cast iron G20	GJL-200 (JL1030)	ASTM Class 30
7	**Shaft**		Stainless steel	X5CrNiMo17-12-2/ 1.4401	AISI 316
8	**O-ring**	Standard	NBR		
		E	EPDM		
		V	FKM		
9	**Mechanical seal**		(Search for the material in the mechanical seal table)		
10	**Fill and drain plugs**	Standard	Brass	CU ZN 40 PB2 UNI 5705/65	C37700
		X	Stainless steel	X5CrNiMo17-12-2/ 1.4401	AISI 316

MN ~ 3500 rpm

Centrifugal Flanged EN 733

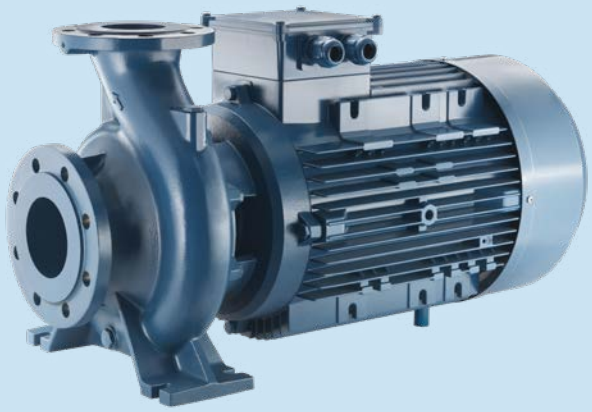

Monobloc horizontal centrifugal pumps, constructed in compliance with EN 733 standards; widely used in water supplies, pressurisation and fire-fighting systems, cooling, heating, irrigation, industrial and agricultural applications.

Construction features	
Pump body	cast iron
Motor bracket	cast iron
Impeller	cast iron, bronze or stainless steel AISI 316
Seal type	mechanical
Pump shaft wet end	stainless steel AISI 304
Liquid temperature	-10 ÷ +90 °C
Operating pressure	max 10 bar

Motor	
2 poles induction motor	3~ 220/380V - 60Hz 1~ 220V - 60Hz
Insulation class	F
Protection degree	IPX5

MN 50-160A -X -2E -WF

- pump type
- impeller: cast iron; **B** bronze; **X** AISI 316
- mech. seal and O-rings: standard; **E** EPDM; **V** FKM; **2E** SiC-SiC-EPDM; **2V** SiC-SiC-FKM
- counter flange: with; **WF** without

MNG-MNGX ~ 3500 rpm

Centrifugal Flanged EN 733

Monobloc horizontal centrifugal pumps, constructed in compliance with EN 733 standards, with stub-shaft and bracket for coupling to standard motors; widely used in water supplies, pressurisation and fire-fighting systems; standard supply with counter-flange.

Construction features	
Pump body	cast iron (MNG); stailess steel AISI 316 (MNGX)
Motor bracket	cast iron
Impeller	cast iron, bronze stainless steel AISI 316 (MNG) stainless steel AISI 316 (MNGX)
Seal type	mechanical
Pump shaft wet end	stainless steel AISI 316
Liquid temperature	-10 ÷ +90 °C
Operating pressure	max 10 bar

Motor	
2 poles induction motor	3~ 220/380V - 60Hz
Insulation class	F
Protection degree	IPX5

MNGX 80-250 A -X -2E -WF

- pump type
- pump body material: cast iron / X AISI 316
- impeller material: as same as the pump body / B bronze / X AISI 316
- mech. seal and O-rings: standard / E EPDM / V FKM / 2E SiC-SiC-EPDM / 2V SiC-SiC-FKM
- counter flange: with / WF without

MA-MAX

~ 3500 rpm

4MA-4MAX

~ 1750 rpm

Centrifugal Flanged EN 733

Bare shaft centrifugal pumps constructed in compliance with EN 733 standards; widely used in water supplies, pressurisation and fire-fighting systems.

MA-4MA

MAX-4MAX

Construction features

Pump body	cast iron (MA) stainless steel AISI 316 (MAX)
Motor bracket	cast iron
Impeller	cast iron, bronze stainless steel AISI 316 (MA) stainless steel AISI 316 (MAX)
Seal type	mechanical (MA-MAX) or gland packing graphite impreganated (MAT-MATX)
Pump shaft wet end	stainless steel AISI 316
Liquid temperature	-10 ÷ +90 °C
Operating pressure	max 10 bar max 14 bar (... -315 ~ 3500 rpm)

Motor

Available with IE3 efficiency class motor

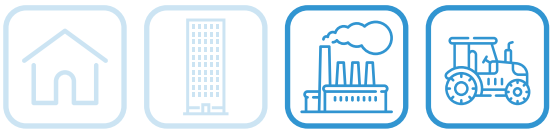

4MA [ ] [ ] 80-160A -X -2E -WF

- poles: [ ] 2 poles; **4** 4 poles
- impeller material: [ ] as same as the pump body; **B** bronze; **X** AISI 316
- counter flange: [ ] with; **WF** without
- mech. seal and O-rings: [ ] standard; **E** EPDM; **V** FKM; **2E** SiC-SiC-EPDM; **2V** SiC-SiC-FKM
- pump body material: [ ] cast iron; **X** AISI 316
- seal: [ ] mechanical; **T** gland packing
- pump type

MA-MAX

~ 3500 rpm

4MA-4MAX

~ 1750 rpm

Construction versions

The pumps can be fitted next to a motor on a common baseplate, with the pump shaft and the motor shaft connected by a flexible coupling.

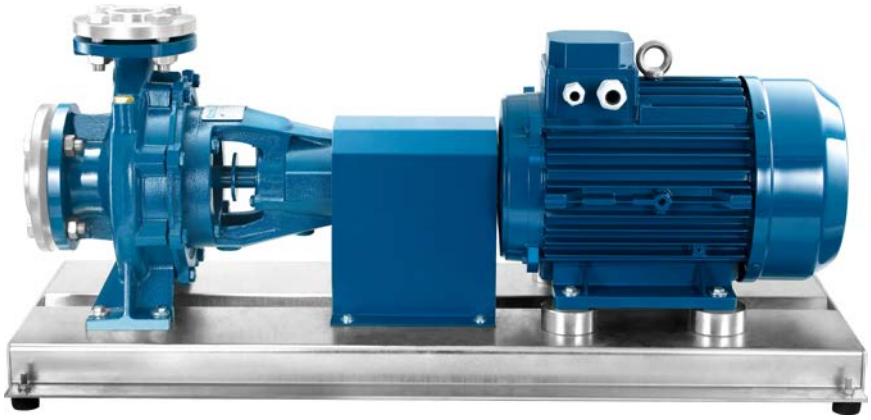

MA-4MA with motor
counterflanges supplied separately

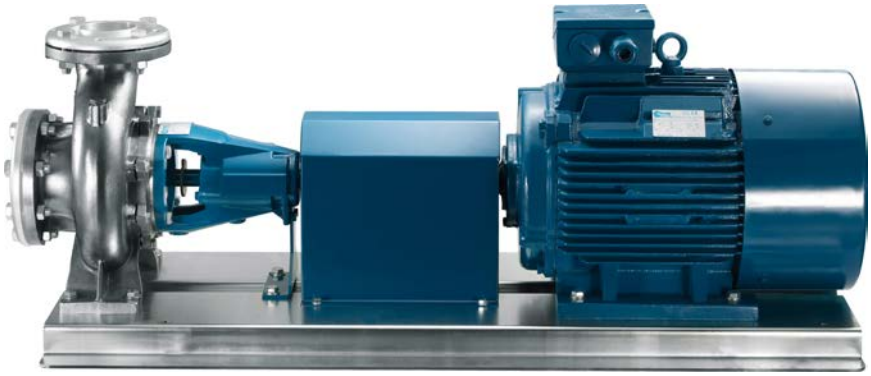

MAX-4MAX with motor
counterflanges supplied separately

Shaft seals versions

The pumps can be provided on request with gland packing instead of mechanical seal.

MA-MAX-4MA-4MAX
mechanical seal

MAT-MATX-4MAT-4MATX
gland packing seal

TYPE - 60 Hz	P2		P1		CURRENT		Q (m³/h - l/min)											
			1~	3~	1~ 220V	3~ 380V	0	6	7,5	9	12	15	18	21	24	27	30	33
							0	100	125	150	200	250	300	350	400	450	500	550
	HP	kW	kW		A		H (m)											
32-160C	2	1,5	2,0	1,9	9,7	3,8	23,1	23,0	22,7	22,2	20,8	18,9	16,5	13,6				
32-160B	3	2,2	2,7	2,6	13,7	5,3	28,0	28,1	27,8	27,3	26,1	24,6	22,5	19,6	16,3			
32-160A	4	3	-	3,6	-	6,8	35,3	35,1	34,9	34,5	33,4	32,3	30,4	27,8	24,5	21,0		
32-200C	5,5	4	5,2	5,0	24,5	9,4	39,3	39,3	39,2	39,0	38,3	37,3	35,7	33,4	30,5	28,2		
32-200B1	7,5	5,5	-	6,6	-	12,1	47,7	47,6	47,6	47,5	46,9	45,9	44,7	42,9	40,5	37,4		
32-200B	7,5	5,5	-	6,7	-	11,6	47,7	47,6	47,6	47,5	46,9	45,9	44,7	42,9	40,5	37,4	35,7	
32-200A1	10	7,5	-	8,6	-	15,9	58,0	57,5	57,5	57,3	56,7	55,7	54,5	52,9	50,9	48,3	45,1	
32-200A	10	7,5	-	8,7	-	14,9	58,0	57,5	57,5	57,3	56,7	55,7	54,5	52,9	50,9	48,3	45,1	43,0
32-250C	12,5	9,2	-	9,9	-	17,0	76,2	-	74,3	74,0	72,9	71,2	69,0	66,4	63,4	59,5		
32-250B	15	11	-	12,0	-	20,5	87,6	-	85,6	85,4	84,6	83,2	81,1	78,6	75,7	72,3		
32-250A1	20	15	-	13,7	-	25,1	96,7	-	95,1	94,9	94,4	93,2	91,4	89,1	86,4	83,2		
32-250A	20	15	-	14,1	-	24,3	96,7	-	95,1	94,9	94,4	93,2	91,4	89,1	86,4	83,2		

TYPE - 60 Hz	P2		P1		CURRENT		Q (m³/h - l/min)																
			1~	3~	1~ 220V	3~ 380V	0	9	12	15	18	21	24	27	30	33	36	39	42	45	48	54	60
							0	150	200	250	300	350	400	450	500	550	600	650	700	750	800	900	1000
	HP	kW	kW		A		H (m)																
40-125C	2	1,5	2,0	1,9	9,7	3,8	17,7	18,6	18,4	18,0	17,3	16,4	15,3	14,0	12,6	10,9	8,9						
40-125B	3	2,2	2,7	2,7	13,7	5,4	22,9	24,1	24,1	23,7	23,1	22,3	21,2	20,1	18,7	17,1	15,1	12,9					
40-125A	4	3	-	3,5	-	6,7	27,3	28,4	28,4	28,3	27,9	27,2	26,4	25,3	23,9	22,2	20,3	18,2	16,0				
40-160B	4	3	3,8	3,8	18,1	7,1	28,3	28,9	28,9	28,8	28,5	27,7	26,6	25,4	23,9	22,2	20,1						
40-160A	5,5	4	5,0	4,8	23,8	9,0	32,7	33,8	33,9	33,9	33,6	33,0	32,2	31,2	30,0	28,4	26,6	24,6	22,3				
40-160AP	7,5	5,5	-	6,0	-	11,3	38,2	39,5	39,8	39,7	39,4	38,8	38,0	37,0	35,7	34,1	32,5	30,8	28,8	26,6	24,2		
40-200B1	7,5	5,5	-	6,7	-	12,2	44,7	45,3	45,2	44,9	44,2	43,2	41,9	40,4	38,4	36,0	33,3	30,5					
40-200B	7,5	5,5	-	6,9	-	12,2	44,7	45,3	45,2	44,9	44,2	43,2	41,9	40,4	38,4	36,0	33,3	30,5	27,2				
40-200A1	10	7,5	-	8,9	-	16,4	55,2	56,3	56,3	56,4	55,9	55,0	53,8	52,4	50,7	48,6	46,1	43,4					
40-200A	10	7,5	-	9,2	-	15,7	55,2	56,3	56,3	56,4	55,9	55,0	53,8	52,4	50,7	48,6	46,1	43,4	40,1				
40-200AP	12,5	9,2	-	10,4	-	17,8	60,2	60,8	60,9	60,9	60,5	59,6	58,5	57,2	55,7	53,9	51,6	48,9	45,8	42,8			
40-250C	12,5	9,2	-	11,2	-	19,1	63,2	65,1	65,3	65,2	64,8	64,2	63,3	61,4	59,0	56,3	53,3						
40-250B	15	11	-	13,5	-	22,7	71,7	73,7	74,1	74,0	73,7	73,1	71,7	70,1	68,5	66,2	63,2	60,0					
40-250A1	20	15	-	16,3	-	28,7	81,3	83,7	84,2	84,3	83,9	82,8	81,6	80,6	79,4	77,9	75,4	72,4	68,9				
40-250A	20	15	-	17,5	-	29,5	81,3	83,7	84,2	84,3	83,9	82,8	81,6	80,6	79,4	77,9	75,4	72,4	68,9	65,1			
40-250BM max 14 bar	25	18,5	-	20,6	-	35,3	89,8	91,8	91,8	91,4	91,0	90,6	90,0	89,4	88,8	88,1	87,3	85,7	83,2	80,1	76,5	68,1	
40-250AM max 14 bar	30	22	-	24,6	-	42,2	101,0	102,7	102,8	102,8	102,6	102,2	101,7	101,1	100,2	99,1	98,0	96,6	94,8	92,5	89,4	81,7	72,6

TYPE - 60 Hz	P2		P1		CURRENT		Q (m³/h - l/min)																	
			1~	3~	1~ 220V	3~ 380V	0	12	15	18	21	24	27	30	33	36	39	42	45	48	54	60	66	72	78
							0	200	250	300	350	400	450	500	550	600	650	700	750	800	900	1000	1100	1200	1300
	HP	kW	kW		A		H (m)																	
50-125B	4	3	3,7	3,7	17,6	6,8	20,2	20,6	20,5	20,3	20,1	19,8	19,5	19,1	18,7	18,3	17,8	17,3	16,7	16,1	14,5	12,6	10,5	8,4	
50-125A	5,5	4	5,0	4,8	23,5	9,0	23,7	24,6	24,5	24,5	24,3	24,1	23,9	23,6	23,3	22,9	22,4	21,9	21,3	20,6	19,2	17,5	15,4	13,4	
50-160B1	7,5	5,5	-	6,5	-	12,1	34,2				35,1	34,8	34,4	33,8	33,1	32,4	31,6	30,8	29,8	28,8	26,6	24,0	21,0		
50-160B	7,5	5,5	-	6,6	-	11,4	34,2				35,1	34,8	34,4	33,8	33,1	32,4	31,6	30,8	29,8	28,8	26,6	24,0	21,0	17,6	
50-160A1	10	7,5	-	8,7	-	16,2	40,5				42,4	42,4	42,2	41,9	41,4	40,8	40,2	39,5	38,7	37,8	35,7	33,2	30,6	27,9	
50-160A	10	7,5	-	8,8	-	15,1	40,5				42,4	42,4	42,2	41,9	41,4	40,8	40,2	39,5	38,7	37,8	35,7	33,2	30,6	27,9	24,5
50-200C	12,5	9,2	-	10,3	-	17,6	48,1					50,2	49,7	49,0	48,2	47,3	46,3	45,2	44,0	42,6	39,4	35,6	30,8	25,2	
50-200B	15	11	-	12,3	-	20,9	54,9					57,1	56,7	56,1	55,3	54,5	53,5	52,4	51,3	50,0	47,0	43,3	39	34,4	
50-200A1	20	15	-	14,9	-	26,7	62,0					64,9	64,6	64,1	63,5	62,7	61,8	60,7	59,6	58,3	55,5	52,3	48,1	43,5	38,4
50-200A	20	15	-	15,0	-	25,7	62,0					64,9	64,6	64,1	63,5	62,7	61,8	60,7	59,6	58,3	55,5	52,3	48,1	43,5	38,4
50-250C1	20	15	-	15,7	-	28,0	67,8						66,7	66,1	65,4	64,6	63,8	62,9	61,7	60,3	56,9	53,3			
50-250C	20	15	-	16,5	-	27,9	67,8						66,7	66,1	65,4	64,6	63,8	62,9	61,7	60,3	56,9	53,3	49,3		
50-250B	25	18,5	-	21,1	-	36,0	78,1						78,1	77,4	76,7	75,9	75,1	74,1	72,9	71,5	68,3	64,3	59,9	55,6	
50-250A	30	22	-	24,5	-	42,0	87,2						87,1	86,5	85,9	85,3	84,8	84,1	83,2	82,2	79,6	76,2	72,1	67,7	63,1

TYPE - 60 Hz	P2		P1	3~ 380V	Q (m³/h - l/min)																				
					0	30	33	36	39	42	45	48	54	60	66	72	78	84	96	108	120	132	138	144	150
					0	500	550	600	650	700	750	800	900	1000	1100	1200	1300	1400	1600	1800	2000	2200	2300	2400	2500
	HP	kW	kW	A	H (m)																				
65-125B1	7,5	5,5	6,4	11,9	18,2	19,6	19,5	19,4	19,2	19,0	18,8	18,5	18,0	17,7	17,5	17,2	16,9	16,4	15,0	13,7					
65-125B	7,5	5,5	6,7	11,6	18,2	19,6	19,5	19,4	19,2	19,0	18,8	18,5	18,0	17,7	17,5	17,2	16,9	16,4	15,0	13,7	11,9				
65-125A1	10	7,5	8,6	16,0	23,3	24,7	24,7	24,6	24,5	24,4	24,3	24,1	23,8	23,4	23,0	22,7	22,3	21,7	20,4	19,0	17,4				
65-125A	10	7,5	8,7	14,9	23,2	24,7	24,7	24,6	24,5	24,4	24,3	24,1	23,8	23,4	23,0	22,7	22,3	21,7	20,4	19,0	17,4	15,1			
65-160C	12,5	9,2	10,3	17,6	29,5					30,7	30,5	30,3	29,8	29,3	28,8	28,2	27,5	26,8	24,9	22,5	19,7	16,8	15,4	13,6	
65-160B	15	11	12,6	21,3	33,9					35,7	35,6	35,4	35,0	34,5	34,0	33,4	32,7	32,0	30,3	28,0	25,3	22,1	20,4	19	
65-160A1	20	15	16,7	29,4	41,6					44,1	44,0	43,9	43,7	43,3	42,8	42,3	41,7	41,1	39,8	37,8	35,3	32,3	30,7		
65-160A	20	15	17,0	28,7	41,6					44,1	44,0	43,9	43,7	43,3	42,8	42,3	41,7	41,1	39,8	37,8	35,3	32,3	30,7	28,9	
65-200C1	20	15	16,7	29,4	44,8								45,2	44,5	43,6	42,7	41,8	41,0	38,6	35,0	30,9	27,0			
65-200C	20	15	17,0	28,9	44,8								45,2	44,5	43,6	42,7	41,8	41,0	38,6	35,0	30,9	27,0	25,5		
65-200B	25	18,5	21,2	36,2	52,1								53,8	53	52,3	51,6	50,8	49,9	47,8	45,4	41,4	37,0	34,7	32,6	
65-200A	30	22	25,3	43,3	59,0								61,9	61,3	60,6	60,0	59,3	58,6	56,5	54,2	51,4	46,9	44,4	41,8	
65-250B	40	30	32,0	55,7	79,8								80,8	79,7	78,4	77,0	75,5	73,9	70,4	66,3	61,2	54,9	51,5	49,0	
65-250A	50	37	37,1	66,3	90,2								91,8	90,8	89,6	88,1	86,5	85,0	81,4	77,0	72,0	66,0	62,6	60,7	57,5

TYPE - 60 Hz	P2		P1	3~ 380V	Q (m³/h - l/min)																	
					0	66	72	78	84	96	108	120	132	138	144	150	156	168	180	195	210	225
					0	1100	1200	1300	1400	1600	1800	2000	2200	2300	2400	2500	2600	2800	3000	3250	3500	3750
	HP	kW	kW	A	H (m)																	
80-160E	12,5	9,2	10,3	17,6	20,7	22,5	21,9	21,3	20,8	19,7	18,8	17,9	16,6	16,0	15,5	15,0	14,6	13,5				
80-160D	15	11	12,4	21,0	23,9	25,9	25,4	24,8	24,3	23,3	22,5	21,8	20,5	19,8	19,1	18,5	18,0	16,9	15,5			
80-160C1	20	15	16,0	28,2	29,4	32,6	32,2	31,8	31,3	30,3	29,3	28,2	27,2	26,6	26,0	25,4	24,8	23,4	21,9	19,2		
80-160C	20	15	16,0	27,1	29,4	32,6	32,2	31,8	31,3	30,3	29,3	28,2	27,2	26,6	26,0	25,4	24,8	23,4	21,9	19,2		
80-160B	25	18,5	19,3	33,4	34,9	37,9	37,6	37,3	36,9	36,0	35,0	33,9	32,7	32,1	31,5	30,9	30,4	29,2	27,5	24,9	22,3	
80-160A	30	22	22,5	39,1	38,8	42,4	42,1	41,8	41,4	40,6	39,7	38,7	37,5	36,8	36,1	35,5	34,9	33,6	32,1	29,8	27,4	24,5

TYPE - 60 Hz	P2		P1	3~ 380V	Q (m³/h - l/min)															
					0	84	96	108	120	132	138	144	150	156	168	180	195	210	225	240
					0	1400	1600	1800	2000	2200	2300	2400	2500	2600	2800	3000	3250	3500	3750	4000
	HP	kW	kW	A	H (m)															
80-200B	40	30	33,0	57,2	49,4	53,8	53,0	52,0	51,1	50,2	49,7	49,2	48,7	48,1	47,0	45,6	43,6	40,8	37,6	
80-200A	50	37	39,2	69,4	56,7	62,1	61,5	60,6	59,7	58,8	58,2	57,7	57,2	56,6	55,4	53,9	51,7	49,4	46,8	43,8

TYPE - 60 Hz	P2		P1	3~ 380V	Q (m³/h - l/min)															
					0	108	120	132	138	144	150	156	168	180	195	210	225	240	270	300	330
					0	1800	2000	2200	2300	2400	2500	2600	2800	3000	3250	3500	3750	4000	4500	5000	5500
	HP	kW	kW	A	H (m)																
100-160B	40	30	32,7	56,6	40,6	39,4	39,3	39,1	38,9	38,6	38,3	38,0	37,2	36,4	35,2	34,0	32,9	31,7	29,0	25,8	21,8
100-160A	50	37	39,7	70,1	47,6	46,7	46,6	46,4	46,2	46,0	45,8	45,6	45,0	44,3	43,3	42,1	41,0	39,9	37,5	34,4	30,2

MNG-MNGX ~ 3500 rpm

Centrifugal Flanged EN 733

TYPE - 60 Hz	P2	Motor Size	Q (m³/h - l/min)																		
			0	96	108	120	132	138	144	156	168	180	195	210	225	240	255	270	300	330	360
			0	1600	1800	2000	2200	2300	2400	2600	2800	3000	3250	3500	3750	4000	4250	4500	5000	5500	6000
	kW		H (m) *pump input power (kW)*																		
80-250B	45	225M	77,2 *14,22*	77,7 *32,00*	76,4 *34,32*	75,2 *36,41*	74,0 *37,94*	73,3 *38,70*	72,6 *39,45*	70,9 *41,09*	69,1 *42,67*	67,3 *44,03*	64,9 *45,51*	62,3 *46,76*	59,5 *47,80*						
80-250A	55	250M	90,0 *17,04*	92,0 *37,50*	90,8 *39,95*	89,4 *42,26*	87,9 *44,45*	87,0 *45,48*	86,1 *46,46*	84,1 *48,24*	81,9 *49,83*	79,7 *51,32*	77,1 *53,03*	74,2 *54,66*	71 *56,20*	68,0 *57,50*					
100-200B	45	225M	60,2 *21,69*		60,6 *29,77*	60,2 *30,83*	59,6 *31,89*	59,3 *32,42*	59,0 *32,96*	58,5 *34,07*	57,9 *35,19*	57,1 *36,32*	55,9 *37,73*	54,6 *39,12*	53,0 *40,37*	51,3 *41,51*	49,5 *42,42*	47,7 *43,16*	43,4 *44,26*	38,5 *45,12*	
100-200A	55	250M	65,5 *24,80*		66,3 *34,31*	65,9 *35,51*	65,3 *36,72*	65,0 *37,32*	64,7 *37,94*	64,2 *39,19*	63,7 *40,45*	63,1 *41,65*	62,1 *43,02*	61,0 *44,31*	59,7 *45,63*	58,1 *46,97*	56,4 *48,14*	54,5 *49,15*	50,4 *50,77*	46,1 *52,16*	39,9 *52,86*
100-250C	55	250M	79,9			81,0	80,7	80,6	80,4	79,9	79,4	78,7	77,7	76,5	74,9	73,1	70,9	68,6	64,1		
	75	280S	*25,58*			*43,12*	*44,90*	*45,79*	*46,68*	*48,46*	*50,21*	*51,90*	*53,93*	*55,86*	*57,68*	*59,39*	*60,96*	*62,44*	*65,30*		
100-250B	75	280S	90,0 *29,82*			89,9 *49,11*	89,6 *51,23*	89,4 *52,27*	89,2 *53,30*	88,8 *55,34*	88,2 *57,27*	87,6 *58,98*	86,8 *60,82*	85,9 *62,59*	84,7 *64,38*	83,3 *66,22*	81,0 *68,39*	78,4 *70,55*	73,2 *73,87*	70,9 *77,92*	
100-250A	90	280M	100,5 *32,74*			100,7 *54,04*	100,3 *56,39*	100,1 *57,55*	99,8 *58,71*	99,2 *61,08*	98,4 *63,34*	97,6 *65,30*	96,4 *67,40*	95,0 *69,46*	93,2 *71,65*	91,2 *73,82*	89,3 *75,81*	87,1 *77,67*	81,8 *81,17*	78,7 *85,71*	74,0 *88,00*

MA-MAX

Centrifugal Flanged EN 733

TYPE - 60 Hz	P2	Motor Size	Q (m³/h - l/min)											
			0	6	7,5	9	12	15	18	21	24	27	30	33
			0	100	125	150	200	250	300	350	400	450	500	550
	kW		H (m) *pump input power (kW)*											
32-160C	1,5	90S	23,1 *0,53*	23,0 *0,92*	22,7 *1,01*	22,2 *1,09*	20,8 *1,25*	18,9 *1,39*	16,5 *1,52*	13,6 *1,63*				
32-160B	2,2	90L	28,0 *0,76*	28,1 *1,23*	27,8 *1,34*	27,3 *1,45*	26,1 *1,65*	24,6 *1,83*	22,5 *2,00*	19,6 *2,14*	16,3 *2,26*			
32-160A	3	100L	35,3 *1,10*	35,1 *1,64*	34,9 *1,79*	34,5 *1,92*	33,4 *2,18*	32,3 *2,42*	30,4 *2,65*	27,8 *2,84*	24,5 *3,02*	21,0 *3,17*		
32-200C	4	112M	39,3 *1,59*	39,3 *2,27*	39,2 *2,46*	39,0 *2,64*	38,3 *2,97*	37,3 *3,31*	35,7 *3,61*	33,4 *3,88*	30,5 *4,13*	28,2 *4,34*		
32-200B	5,5	132S	47,7 *2,23*	47,6 *3,05*	47,6 *3,26*	47,5 *3,49*	46,9 *3,91*	45,9 *4,32*	44,7 *4,70*	42,9 *5,05*	40,5 *5,40*	37,4 *5,70*	35,7 *5,98*	
	7,5	132S												
32-200A	7,5	132S	58,0 *2,90*	57,5 *3,84*	57,5 *4,09*	57,3 *4,35*	56,7 *4,86*	55,7 *5,34*	54,5 *5,80*	52,9 *6,26*	50,9 *6,67*	48,3 *7,00*	45,1 *7,37*	43,0 *7,74*
32-250C	11	160M	76,2 *4,06*		74,3 *5,60*	74,0 *5,94*	72,9 *6,53*	71,2 *7,08*	69,0 *7,56*	66,4 *8,00*	63,4 *8,48*	59,5 *8,93*		
32-250B	11	160M	87,6 *5,29*		85,6 *7,03*	85,4 *7,39*	84,6 *8,09*	83,2 *8,76*	81,1 *9,37*	78,6 *9,96*	75,7 *10,50*	72,3 *11,00*		
32-250A	15	160M	96,7 *6,27*		95,1 *8,20*	94,9 *8,61*	94,4 *9,42*	93,2 *10,18*	91,4 *10,92*	89,1 *11,61*	86,4 *12,27*	83,2 *12,85*		

TYPE - 60 Hz	P2	Motor Size	Q (m³/h - l/min)																
			0	9	12	15	18	21	24	27	30	33	36	39	42	45	48	54	60
			0	150	200	250	300	350	400	450	500	550	600	650	700	750	800	900	1000
	kW		H (m) *pump input power (kW)*																
40-125C	1,5	90S	17,7 *0,54*	18,6 *0,97*	18,4 *1,11*	18,0 *1,23*	17,3 *1,33*	16,4 *1,43*	15,3 *1,50*	14,0 *1,55*	12,6 *1,59*	10,9 *1,60*	8,9 *1,60*						
	2,2	90L																	
40-125B	2,2	90L	22,9 *1,79*	24,1 *1,33*	24,1 *1,52*	23,7 *1,68*	23,1 *1,83*	22,3 *1,96*	21,2 *2,08*	20,1 *2,17*	18,7 *2,24*	17,1 *2,29*	15,1 *2,32*	12,9 *2,34*					
	3	100L																	
40-125A	3	100L	27,3 *1,08*	28,4 *1,67*	28,4 *1,90*	28,3 *2,10*	27,9 *2,29*	27,2 *2,45*	26,4 *2,59*	25,3 *2,71*	23,9 *2,82*	22,2 *2,91*	20,3 *2,98*	18,2 *3,02*	16,0 *3,05*				
40-160B	3	100L	28,3 *1,25*	28,9 *1,95*	28,9 *2,16*	28,8 *2,38*	28,5 *2,59*	27,7 *2,77*	26,6 *2,94*	25,4 *3,07*	23,9 *3,18*	22,2 *3,26*	20,1 *3,33*						
	4	112M																	
40-160A	4	112M	32,7 *1,42*	33,8 *2,22*	33,9 *2,47*	33,9 *2,72*	33,6 *2,95*	33,0 *3,18*	32,2 *3,40*	31,2 *3,60*	30,0 *3,78*	28,4 *3,91*	26,6 *4,02*	24,6 *4,11*	22,3 *4,19*				
40-160AP	5,5	132S	38,2 *1,96*	39,5 *2,88*	39,8 *3,18*	39,7 *3,48*	39,4 *3,76*	38,8 *4,02*	38,0 *4,26*	37,0 *4,47*	35,7 *4,66*	34,1 *4,84*	32,5 *5,00*	30,8 *5,14*	28,8 *5,26*	26,6 *5,36*	24,2 *5,43*		
40-200B	5,5	132S	44,7 *2,31*	45,3 *3,35*	45,2 *3,71*	44,9 *4,06*	44,2 *4,42*	43,2 *4,71*	41,9 *4,98*	40,4 *5,26*	38,4 *5,49*	36,0 *5,70*	33,3 *5,89*	30,5 *6,04*	27,2 *6,11*				
	7,5	132S																	
40-200A	7,5	132S	55,2 *3,25*	56,3 *4,46*	56,3 *4,91*	56,4 *5,35*	55,9 *5,76*	55,0 *6,16*	53,8 *6,53*	52,4 *6,87*	50,7 *7,20*	48,6 *7,50*	46,1 *7,77*	43,4 *8,03*	40,1 *8,24*				
	11	160M																	
40-200AP	11	160M	60,2 *3,63*	60,8 *4,95*	60,9 *5,45*	60,9 *5,94*	60,5 *6,39*	59,6 *6,82*	58,5 *7,22*	57,2 *7,60*	55,7 *7,96*	53,9 *8,29*	51,6 *8,61*	48,9 *8,90*	45,8 *9,17*	42,8 *9,41*			
40-250C	11	160M	63,2 *3,99*	65,1 *5,67*	65,3 *6,23*	65,2 *6,79*	64,8 *7,32*	64,2 *7,85*	63,3 *8,36*	61,4 *8,79*	59,0 *9,22*	56,3 *9,67*	53,3 *10,11*						
40-250B	11	160M	71,7 *4,97*	73,7 *6,76*	74,1 *7,41*	74,0 *8,08*	73,7 *8,68*	73,1 *9,23*	71,7 *9,75*	70,1 *10,26*	68,5 *10,79*	66,2 *11,32*	63,2 *11,84*	60,0 *12,36*					
40-250A	15	160M	81,3 *6,31*	83,7 *8,36*	84,2 *9,11*	84,3 *9,80*	83,9 *10,47*	82,8 *11,13*	81,6 *11,78*	80,6 *12,42*	79,4 *13,08*	77,9 *13,74*	75,4 *14,34*	72,4 *14,89*	68,9 *15,42*	65,1 *15,93*			
40-250BM max 14 bar	18,5	160L	89,8 *7,12*	91,8 *9,03*	91,8 *9,70*	91,4 *10,39*	91,0 *11,08*	90,6 *11,78*	90,0 *12,49*	89,4 *13,25*	88,8 *14,00*	88,1 *14,69*	87,3 *15,34*	85,7 *15,97*	83,2 *16,58*	80,1 *17,17*	76,5 *17,77*	68,1 *18,93*	
40-250AM max 14 bar	22	180M	101,0 *8,17*	102,7 *10,36*	102,8 *11,11*	102,8 *11,86*	102,6 *12,62*	102,2 *13,46*	101,7 *14,29*	101,1 *15,10*	100,2 *15,89*	99,1 *16,65*	98,0 *17,43*	96,6 *18,20*	94,8 *18,91*	92,5 *19,59*	89,4 *20,27*	81,7 *21,57*	72,6 *22,71*

MA-MAX ~ *EN 733*

TYPE - 60 Hz	P2	Motor Size	Q (m³/h - l/min)																		
			0	12	15	18	21	24	27	30	33	36	39	42	45	48	54	60	66	72	78
			0	200	250	300	350	400	450	500	550	600	650	700	750	800	900	1000	1100	1200	1300
	kW		H (m) pump input power (kW)																		
50-125B	3	100L	20,2 1,29	20,6 1,68	20,5 1,82	20,3 1,96	20,1 2,10	19,8 2,23	19,5 2,36	19,1 2,47	18,7 2,57	18,3 2,67	17,8 2,75	17,3 2,84	16,7 2,91	16,1 2,98	14,5 3,09	12,6 3,15	10,5 3,17	8,4 3,18	
50-125A	4	112M	23,7 1,48	24,6 2,05	24,5 2,23	24,5 2,40	24,3 2,55	24,1 2,70	23,9 2,86	23,6 3,02	23,3 3,18	22,9 3,31	22,4 3,44	21,9 3,56	21,3 3,66	20,6 3,76	19,2 3,92	17,5 4,04	15,4 4,12	13,4 4,18	
50-160B	5,5	132S	34,2 2,10				35,1 3,96	34,8 4,20	34,4 4,43	33,8 4,64	33,1 4,84	32,4 5,03	31,6 5,20	30,8 5,36	29,8 5,49	28,8 5,60	26,6 5,77	24,0 5,86	21,0 5,89	17,6 5,81	
50-160A	7,5	132S	40,5 2,71				42,4 4,85	42,4 5,14	42,2 5,42	41,9 5,70	41,4 5,97	40,8 6,22	40,2 6,46	39,5 6,68	38,7 6,88	37,8 7,06	35,7 7,37	33,2 7,60	30,6 7,76	27,9 7,84	24,5 7,89
50-200C	11	160M	48,1 2,84					50,2 6,10	49,7 6,46	49,0 6,79	48,2 7,08	47,3 7,34	46,3 7,61	45,2 7,89	44,0 8,14	42,6 8,36	39,4 8,70	35,6 8,96	30,8 9,12	25,2 9,19	
50-200B	11	160M	54,9 3,77					57,1 7,35	56,7 7,74	56,1 8,12	55,3 8,48	54,5 8,81	53,5 9,13	52,4 9,43	51,3 9,72	50,0 9,99	47,0 10,44	43,3 10,79	39,0 11,07	34,4 11,26	
50-200A	15	160M	62,0 4,39					64,9 8,40	64,6 8,87	64,1 9,35	63,5 9,81	62,7 10,21	61,8 10,57	60,7 10,91	59,6 11,26	58,3 11,60	55,5 12,19	52,3 12,67	48,1 13,08	43,5 13,40	38,4 13,65
50-250C	15	160M	67,8 4,54						66,7 9,60	66,1 10,13	65,4 10,64	64,6 11,13	63,8 11,60	62,9 12,04	61,7 12,47	60,3 12,88	56,9 13,66	53,3 14,38	49,3 15,04		
50-250B	18,5	160L	78,1 6,13						78,1 11,96	77,4 12,59	76,7 13,18	75,9 13,75	75,1 14,29	74,1 14,82	72,9 15,33	71,5 15,84	68,3 16,83	64,3 17,74	59,9 18,59	55,6 19,37	
50-250A	22	180M	87,2 7,03						87,1 13,27	86,5 14,00	85,9 14,71	85,3 15,37	84,8 16,00	84,1 16,61	83,2 17,20	82,2 17,76	79,6 18,83	76,2 19,84	72,1 20,79	67,7 21,72	63,1 22,60

TYPE - 60 Hz	P2	Motor Size	Q (m³/h - l/min)														
			0	42	45	48	54	60	66	72	78	84	96	108	120	132	138	144
			0	700	750	800	900	1000	1100	1200	1300	1400	1600	1800	2000	2200	2300	2400
	kW		H (m) pump input power (kW)															
50-315DN No EN 733; no CAT, CAX, CATX	37	200L	87,8 11,19	90,4 20,11	90,3 20,82	90,2 21,53	89,9 22,91	89,2 24,19	88,2 25,41	87,1 26,59	86,0 27,71	84,8 28,79	82,4 30,91	79,9 32,95	76,9 34,81	73,4 36,56		
50-315CN No EN 733; no CAT, CAX, CATX	45	225M	101,8 13,32	105,0 23,97	104,9 24,80	104,8 25,62	104,3 27,25	103,7 28,79	102,7 30,21	101,5 31,54	100,3 32,85	99,1 34,15	96,7 36,68	94,1 39,07	91,3 41,26	88,7 43,26		
50-315BN No EN 733; no CAT, CAX, CATX	55	250M	122,3 17,44	124,3 29,30	124,4 30,29	124,5 31,27	124,7 33,28	124,4 35,14	123,6 36,80	122,5 38,34	121,3 39,85	119,9 41,39	116,6 44,41	113,3 47,32	110,1 50,01	107,1 52,39	105,4 53,60	103,5 54,83
50-315AN No EN 733; no CAT, CAX, CATX	75	280S	146,1 22,75	146,9 35,89	147,1 37,06	147,3 38,23	147,4 40,53	147,3 42,67	146,9 44,71	146,3 46,70	145,3 48,67	144,1 50,61	141,2 54,26	137,9 57,62	134,1 60,84	130,0 63,78	127,9 65,11	125,8 66,34

TYPE - 60 Hz	P2	Motor Size	Q (m³/h - l/min)																					
			0	30	33	36	39	42	45	48	54	60	66	72	78	84	96	108	120	132	138	144	150
			0	500	550	600	650	700	750	800	900	1000	1100	1200	1300	1400	1600	1800	2000	2200	2300	2400	2500
	kW		H (m) pump input power (kW)																				
65-125B	5,5 7,5	132S 132S	18,2 2,35	19,6 3,52	19,5 3,63	19,4 3,73	19,2 3,82	19,0 3,92	18,8 4,01	18,5 4,10	18,0 4,27	17,7 4,48	17,5 4,71	17,2 4,93	16,9 5,13	16,4 5,31	15,0 5,56	13,7 5,83	11,9 5,88				
65-125A	7,5	132S	23,2 2,95	24,7 4,39	24,7 4,54	24,6 4,70	24,5 4,85	24,4 4,99	24,3 5,14	24,1 5,28	23,8 5,55	23,4 5,80	23,0 6,05	22,7 6,30	22,3 6,52	21,7 6,72	20,4 7,08	19,0 7,40	17,4 7,72	15,1 7,76			
65-160C	11	160M	29,5 3,15					30,7 5,71	30,5 5,91	30,3 6,10	29,8 6,47	29,3 6,83	28,8 7,18	28,2 7,51	27,5 7,79	26,8 8,05	24,9 8,50	22,5 8,83	19,7 9,08	16,8 9,24	15,4 9,28	13,6 9,29	
65-160B	11	160M	33,9 3,86					35,7 6,88	35,6 7,11	35,4 7,34	35,0 7,80	34,5 8,25	34,0 8,66	33,4 9,04	32,7 9,39	32,0 9,72	30,3 10,30	28,0 10,76	25,3 11,11	22,1 11,37	20,4 11,46	19,0 11,53	
65-160A	15	160M	41,6 4,80					44,1 8,63	44,0 8,92	43,9 9,22	43,7 9,80	43,3 10,39	42,8 10,94	42,3 11,45	41,7 11,91	41,1 12,34	39,8 13,08	37,8 13,84	35,3 14,52	32,3 15,06	30,7 15,29	28,9 15,48	
65-200C	15	160M	44,8 4,49								45,2 10,62	44,5 11,19	43,6 11,78	42,7 12,34	41,8 12,85	41,0 13,31	38,6 14,08	35,0 14,67	30,9 15,12	27,0 15,43	25,5 15,53		
65-200B	18,5 22,5	160L 180M	52,1 5,55								53,8 12,73	53,0 13,50	52,3 14,16	51,6 14,74	50,8 15,32	49,9 15,95	47,8 17,03	45,4 17,85	41,4 18,58	37,0 19,13	34,7 19,33	32,6 19,50	
65-200A	22,5	180M	59,0 6,71								61,9 14,86	61,3 15,68	60,6 16,48	60,0 17,26	59,3 18,02	58,6 18,74	56,5 20,01	54,2 21,06	51,4 21,91	46,9 22,74	44,4 23,09	41,8 23,37	
65-250B	30	200L	79,8 8,51								80,8 19,89	79,7 20,96	78,4 21,91	77,0 22,77	75,5 23,59	73,9 24,43	70,4 25,96	66,3 27,20	61,2 28,06	54,9 28,90	51,5 29,24	49,0 29,48	
65-250A	37	200L	90,2 10,18								91,8 23,00	90,8 24,23	89,6 25,41	88,1 26,54	86,5 27,56	85,0 28,41	81,4 29,97	77,0 31,48	72,0 32,60	66,0 33,40	62,6 33,71	60,7 34,07	57,5 34,35

TYPE - 60 Hz	P2	Motor Size	Q (m³/h - l/min)																		
			0	54	60	66	72	78	84	96	108	120	132	138	144	150	156	168	180	195	210
			0	900	1000	1100	1200	1300	1400	1600	1800	2000	2200	2300	2400	2500	2600	2800	3000	3250	3500
	kW		H (m) *pump input power (kW)*																		
65-315CN No CAT, CAX, CATX	55	250M	89,1 *14,88*	94,6 *27,27*	94,6 *28,69*	94,6 *30,09*	94,2 *31,43*	93,7 *32,74*	93,3 *34,03*	92,1 *36,56*	90,4 *39,10*	88,6 *41,55*	86,9 *43,80*	86,1 *44,88*	85,2 *45,95*	84,2 *47,04*	83,1 *48,12*	80,8 *50,26*	78,2 *52,38*		
65-315BN No CAT, CAX, CATX	75	280S	109,3 *19,73*	113,8 *33,93*	114,0 *35,64*	114,2 *37,33*	114,2 *38,93*	113,9 *40,50*	113,6 *42,10*	112,4 *45,26*	110,7 *48,26*	108,6 *51,13*	106,5 *53,82*	105,4 *55,13*	104,4 *56,45*	103,4 *57,80*	102,5 *59,17*	100,7 *61,90*	98,5 *64,51*	94,8 *67,56*	
65-315AN No CAT, CAX, CATX	90	280M	132,5 *26,42*	137,4 *43,32*	137,9 *45,51*	138,3 *47,69*	138,4 *49,75*	138,3 *51,74*	138,1 *53,71*	137,3 *57,58*	135,8 *61,35*	133,8 *64,98*	131,7 *68,43*	130,6 *70,11*	129,5 *71,78*	128,4 *73,47*	127,3 *75,17*	125,2 *78,50*	123,0 *81,56*	120,1 *84,90*	116,3 *89,60*

TYPE - 60 Hz	P2	Motor Size	Q (m³/h - l/min)																		
			0	66	72	78	84	96	108	120	132	138	144	150	156	168	180	195	210	225	240
			0	1100	1200	1300	1400	1600	1800	2000	2200	2300	2400	2500	2600	2800	3000	3250	3500	3750	4000
	kW		H (m) *pump input power (kW)*																		
80-160E	11	160M	20,7 *4,46*	22,5 *7,05*	21,9 *7,17*	21,3 *7,28*	20,8 *7,41*	19,7 *7,69*	18,8 *8,09*	17,9 *8,49*	16,6 *8,69*	16,0 *8,80*	15,5 *8,93*	15,0 *9,06*	14,6 *9,18*	13,5 *9,35*					
80-160D	11	160M	23,9 *5,03*	25,9 *8,11*	25,4 *8,30*	24,8 *8,49*	24,3 *8,70*	23,3 *9,18*	22,5 *9,64*	21,8 *10,07*	20,5 *10,40*	19,8 *10,54*	19,1 *10,67*	18,5 *10,82*	18,0 *10,98*	16,9 *11,22*	15,5 *11,34*				
80-160C	15	160M	29,4 *5,73*	32,6 *9,88*	32,2 *10,20*	31,8 *10,51*	31,3 *10,82*	30,3 *11,44*	29,3 *12,05*	28,2 *12,57*	27,2 *12,96*	26,6 *13,16*	26,0 *13,40*	25,4 *13,65*	24,8 *13,88*	23,4 *14,24*	21,9 *14,49*	19,2 *14,56*			
80-160B	18,5	160L	34,9 *6,98*	37,9 *11,63*	37,6 *12,05*	37,3 *12,44*	36,9 *12,82*	36,0 *13,54*	35,0 *14,25*	33,9 *14,91*	32,7 *15,44*	32,1 *15,66*	31,5 *15,89*	30,9 *16,13*	30,4 *16,38*	29,2 *16,86*	27,5 *17,27*	24,9 *17,65*	22,3 *17,84*		
80-160A	22,5	180M	38,8 *7,79*	42,4 *12,99*	42,1 *13,42*	41,8 *13,88*	41,4 *14,39*	40,6 *15,40*	39,7 *16,21*	38,7 *16,88*	37,5 *17,54*	36,8 *17,86*	36,1 *18,17*	35,5 *18,46*	34,9 *18,75*	33,6 *19,27*	32,1 *19,73*	29,8 *20,20*	27,4 *20,54*	24,5 *20,69*	
80-200B	30	200L	49,4 *9,37*				53,8 *18,68*	53,0 *20,00*	52,0 *21,30*	51,1 *22,63*	50,2 *23,96*	49,7 *24,56*	49,2 *25,08*	48,7 *25,53*	48,1 *25,94*	47,0 *26,75*	45,6 *27,57*	43,6 *28,51*	40,8 *29,35*	37,6 *30,00*	
80-200A	37	200L	56,7 *10,55*				62,1 *21,49*	61,5 *23,09*	60,6 *24,74*	59,7 *26,30*	58,8 *27,78*	58,2 *28,47*	57,7 *29,12*	57,2 *29,71*	56,6 *30,27*	55,4 *31,30*	53,9 *32,34*	51,7 *33,60*	49,4 *34,65*	46,8 *35,49*	43,8 *36,21*
80-250B	45	225M	77,2 *14,22*					77,7 *32,00*	76,4 *34,32*	75,2 *36,41*	74,0 *37,94*	73,3 *38,70*	72,6 *39,45*	71,8 *40,27*	70,9 *41,09*	69,1 *42,67*	67,3 *44,03*	64,9 *45,51*	62,3 *46,76*	59,5 *47,80*	
80-250A	55	250M	90,0 *17,04*					92,0 *37,50*	90,8 *39,95*	89,4 *42,26*	87,9 *44,45*	87,0 *45,48*	86,1 *46,46*	85,1 *47,37*	84,1 *48,24*	81,9 *49,83*	79,7 *51,32*	77,1 *53,03*	74,2 *54,66*	71,0 *56,20*	68,0 *57,50*

TYPE - 60 Hz	P2	Motor Size	Q (m³/h - l/min)																		
			0	108	120	132	138	144	150	156	168	180	195	210	225	240	255	270	300	330	360
			0	1800	2000	2200	2300	2400	2500	2600	2800	3000	3250	3500	3750	4000	4250	4500	5000	5500	6000
	kW		H (m) *pump input power (kW)*																		
100-200D	30	200L	41,9 *21,10*	41,2 *24,40*	40,8 *24,83*	40,0 *25,26*	39,7 *25,50*	39,3 *25,76*	38,8 *26,02*	38,4 *26,27*	37,3 *26,69*	36,2 *26,97*	34,7 *27,28*	33,2 *27,68*	31,8 *28,13*	30,2 *28,64*	28,4 *29,19*	26,7 *29,69*	22,7 *30,42*		
100-200C	37	200L	49,8 *23,68*	49,5 *28,27*	49,3 *29,02*	48,6 *29,77*	48,2 *30,14*	47,7 *30,48*	47,2 *30,81*	46,8 *31,12*	45,9 *31,70*	44,9 *32,25*	43,3 *32,85*	41,7 *33,41*	40,1 *34,08*	38,7 *34,81*	37,2 *35,47*	35,6 *36,07*	31,6 *36,90*	26,4 *37,16*	
100-200B	45	225M	58,0 *21,69*	58,5 *29,77*	58,3 *30,83*	57,9 *31,89*	57,6 *32,42*	57,3 *32,96*	57,0 *33,51*	56,6 *34,07*	55,8 *35,19*	54,8 *36,32*	53,6 *37,73*	52,2 *39,12*	50,8 *40,37*	49,3 *41,51*	47,8 *42,42*	46,1 *43,16*	41,8 *44,26*	36,9 *45,12*	
100-200A	55	250M	64,4 *24,80*	64,8 *34,31*	64,6 *35,51*	64,3 *36,72*	64,0 *37,32*	63,7 *37,94*	63,4 *38,56*	63,1 *39,16*	62,3 *40,45*	61,4 *41,65*	60,2 *43,02*	58,9 *44,31*	57,5 *45,63*	56,1 *46,97*	54,7 *48,14*	53,2 *49,15*	49,3 *50,77*	44,5 *52,16*	39,4 *52,86*
100-250C	55 75	250M 280S	79,9 *25,58*		81,0 *43,12*	80,7 *44,90*	80,6 *45,79*	80,4 *46,68*	80,2 *47,57*	79,9 *48,46*	79,4 *50,21*	78,7 *51,90*	77,7 *53,93*	76,5 *55,86*	74,9 *57,68*	73,1 *59,39*	70,9 *60,96*	68,6 *62,44*	64,1 *65,30*		
100-250B	75	280S	90,0 *29,82*		89,9 *49,11*	89,6 *51,23*	89,4 *52,27*	89,2 *53,30*	89,0 *54,32*	88,8 *55,34*	88,2 *57,27*	87,6 *58,98*	86,8 *60,82*	85,9 *62,59*	84,7 *64,38*	83,3 *66,22*	81,0 *68,39*	78,4 *70,55*	73,2 *73,87*	70,9 *77,92*	
100-250A	90	280M	100,5 *32,74*		100,7 *54,04*	100,3 *56,39*	100,1 *57,55*	99,8 *58,71*	99,5 *59,90*	99,2 *61,08*	98,4 *63,34*	97,6 *65,30*	96,4 *67,40*	95,0 *69,46*	93,2 *71,65*	91,2 *73,82*	89,3 *75,81*	87,1 *77,67*	81,8 *81,17*	78,7 *85,71*	74,0 *88,00*

4MA-4MAX

Centrifugal Flanged EN 733

TYPE - 60 Hz	P2	Motor Size	Q (m³/h - l/min)											
			0	1,5	3	4,5	6	7,5	9	10,5	12	15	18	21
			0	25	50	75	100	125	150	175	200	250	300	350
	kW		H (m) pump input power (kW)											
32-160C	0,37	71B	5,9 0,15	5,9 0,18	5,8 0,20	5,5 0,22	5,3 0,24	4,8 0,26	4,3 0,28	3,5 0,28	2,6 0,29			
32-160B	0,37	71B	7,2 0,18	7,2 0,21	7,1 0,24	6,7 0,27	6,4 0,29	5,9 0,31	5,3 0,33	4,6 0,34	3,6 0,36			
32-160A	0,55	80A	8,8 0,22	8,8 0,26	8,7 0,29	8,5 0,31	8,2 0,35	7,9 0,37	7,4 0,39	6,9 0,41	6,1 0,43	4,0 0,45		
32-200C	0,75	80B	11,0 0,26		10,8 0,39	10,6 0,43	10,2 0,47	9,9 0,51	9,4 0,54	8,9 0,57	8,4 0,59	6,7 0,66	4,2 0,71	
32-200B	1,1	90S	13,0 0,38		12,7 0,47	12,5 0,51	12,2 0,56	11,7 0,61	11,2 0,66	10,6 0,70	10,1 0,74	8,7 0,78	6,3 0,81	
32-200A	1,1	90S	15,9 0,44		15,7 0,53	15,5 0,57	15,3 0,66	15,0 0,71	14,5 0,77	13,8 0,82	13,2 0,88	11,7 0,98	9,5 1,04	6,8 1,10
32-250C	1,5	90L	17,5 0,55		17,2 0,75	16,9 0,79	16,6 0,85	16,2 0,90	15,7 0,95	15,1 1,00	14,4 1,04	12,5 1,09	10,0 1,18	6,5 1,21
32-250B	1,5	90L	20,3 0,75		20,0 0,87	19,7 0,93	19,4 1,00	19,0 1,06	18,4 1,14	17,8 1,19	17,0 1,24	15,3 1,33	12,6 1,39	8,3 1,42
32-250A	2,2	100L	22,6 0,80		22,2 0,95	21,9 1,03	21,6 1,10	21,3 1,18	20,7 1,24	20,0 1,30	18,9 1,36	17,2 1,46	14,8 1,52	9,1 1,55

TYPE - 60 Hz	P2	Motor Size	Q (m³/h - l/min)													
			0	4,5	6	7,5	9	10,5	12	15	18	21	24	27	30	33
			0	75	100	125	150	175	200	250	300	350	400	450	500	550
	kW		H (m) pump input power (kW)													
40-125C	0,37	71B	4,2 0,15	4,4 0,18	4,3 0,19	4,2 0,21	4,1 0,23	4,0 0,23	3,8 0,25	3,4 0,26	2,8 0,27	2,0 0,29				
40-125B	0,37	71B	5,4 0,19	5,5 0,22	5,5 0,25	5,4 0,26	5,3 0,28	5,2 0,29	5,0 0,31	4,6 0,34	4,0 0,35	3,3 0,37				
40-125A	0,55	80A	6,2 0,23	6,3 0,28	6,3 0,30	6,2 0,32	6,1 0,34	6,0 0,36	5,8 0,38	5,4 0,40	4,9 0,43	4,2 0,44	3,4 0,46			
40-160B	0,55	80A	7,4 0,21	7,5 0,29	7,6 0,34	7,4 0,37	7,2 0,40	7,0 0,42	6,8 0,43	6,1 0,45	4,9 0,47	3,7 0,48	2,5 0,47			
40-160A	0,75	80B	8,8 0,23	8,9 0,34	9,0 0,38	8,9 0,41	8,7 0,45	8,5 0,47	8,3 0,49	7,5 0,53	6,6 0,57	5,6 0,59	4,5 0,60			
40-160AP	0,75 1,10	80B 90S	11,1 0,32	11,1 0,47	11,3 0,52	11,3 0,56	11,1 0,60	10,9 0,64	10,6 0,67	10,0 0,72	9,0 0,77	8,0 0,81	6,8 0,84			
40-200B	1,1	90S	11,3 0,36		11,4 0,52	11,3 0,56	11,1 0,60	10,8 0,64	10,5 0,68	9,6 0,75	8,5 0,78	6,9 0,81	4,7 0,84			
40-200A	1,1	90S	13,8 0,37		13,9 0,64	13,8 0,72	13,6 0,74	13,4 0,79	13,2 0,82	12,3 0,91	11,3 0,99	10,0 1,06	8,3 1,13			
40-200AP	1,1 1,5	90S 90L	14,8 0,41		14,9 0,69	14,8 0,79	14,6 0,81	14,4 0,86	14,2 0,90	13,3 0,99	12,3 1,08	11,0 1,16	9,4 1,23			
40-250C	1,5	90L	15,7 0,61				15,2 0,93	15,0 0,98	14,7 1,04	14,0 1,14	12,8 1,22	11,1 1,32	9,1 1,38	6,6 1,45		
40-250B	2,2	100L	18,3 0,73				18,2 1,13	17,9 1,19	17,7 1,24	17,1 1,39	16,2 1,51	14,9 1,62	12,9 1,73	10,7 1,82	8,3 1,89	
40-250A	2,2	100L	20,9 0,89				20,8 1,32	20,6 1,40	20,4 1,47	19,8 1,62	19,0 1,75	17,9 1,88	16,3 2,00	14,1 2,10	11,5 2,21	8,4 2,31

TYPE - 60 Hz	P2	Motor Size	Q (m³/h - l/min)															
			0	9	10,5	12	15	18	21	24	27	30	33	36	39	42	45	48	54
			0	150	175	200	250	300	350	400	450	500	550	600	650	700	750	800	900
	kW		H (m) pump input power (kW)																
50-125B	0,55	80A	5,3 0,15	5,5 0,23	5,5 0,25	5,4 0,28	5,3 0,32	5,1 0,38	4,9 0,40	4,7 0,44	4,4 0,45	4,1 0,46	3,6 0,47	3,1 0,47	2,6 0,48	2,1 0,49			
50-125A	0,75	80B	6,2 0,23	6,4 0,38	6,4 0,39	6,3 0,41	6,3 0,44	6,1 0,48	6,0 0,51	5,8 0,55	5,5 0,59	5,2 0,62	4,8 0,63	4,4 0,64	3,9 0,64	3,4 0,64	2,9 0,63		
50-160B	0,75	80B	7,9 0,23	8 0,43	7,9 0,45	7,8 0,47	7,7 0,51	7,3 0,56	6,9 0,60	6,4 0,63	5,9 0,65	5,3 0,66	4,7 0,67	4 0,68	3,2 0,68	2,3 0,67			
50-160A	1,1	90S	9,4 0,34	9,4 0,55	9,4 0,57	9,3 0,59	9,2 0,65	9 0,72	8,7 0,77	8,3 0,80	7,8 0,82	7,2 0,84	6,7 0,86	6 0,87	5,4 0,88	4,7 0,88	3,9 0,89	3,1 0,88	
50-200C	1,1	90S	12,0 0,39	12 0,63	11,8 0,68	11,7 0,72	11,2 0,79	10,7 0,83	10 0,86	9,3 0,89	8,2 0,91	7,2 0,93	6 0,94	4,6 0,94	3,2 0,95				
50-200B	1,5	90L	13,1 0,48		13,1 0,77	13,1 0,83	12,7 0,92	12,2 1,02	11,6 1,09	10,9 1,14	10,0 1,18	9,2 1,22	8,2 1,24	7,0 1,27	5,7 1,27	4,2 1,27			
50-200A	1,5	90L	14,8 0,54		14,7 0,87	14,5 0,92	14,4 1,03	13,9 1,14	13,4 1,22	12,7 1,28	11,9 1,32	11,0 1,36	10,0 1,40	8,9 1,43	7,6 1,45	6,3 1,47	4,6 1,48		
50-250C	2,2	100L	17,9 0,58			17,7 1,24	17,4 1,32	16,9 1,47	16,4 1,59	15,8 1,71	14,9 1,80	14,2 1,89	13,4 1,97	12,4 2,04	11,0 2,10	9,5 2,16	7,5 2,22		
50-250B	3	100L	19,9 0,79				19,6 1,58	19,1 1,72	18,8 1,85	18,2 1,97	17,5 2,07	16,7 2,19	15,7 2,28	14,6 2,37	13,6 2,45	12,0 2,52	10,4 2,58	8,2 2,64	
50-250A	4	112M	23,0 0,90				22,7 1,84	22,5 2,07	22,2 2,21	21,8 2,42	21,1 2,60	20,4 2,78	19,5 2,95	18,7 3,12	17,7 3,28	16,6 3,43	15,2 3,53	13,4 3,62	8,4 3,74

TYPE - 60 Hz	P2	Motor Size	Q (m³/h - l/min)																			
			0	18	21	24	27	30	33	36	39	42	45	48	54	60	66	72	78	84	90	96
			0	300	350	400	450	500	550	600	650	700	750	800	900	1000	1100	1200	1300	1400	1500	1600
	kW		H (m) / *pump input power (kW)*																			
50-315C No EN 733	5,5	132M	24,4 *1,64*	24,7 *2,58*	24,7 *2,77*	24,6 *2,96*	24,5 *3,15*	24,3 *3,33*	24,0 *3,50*	23,7 *3,66*	23,4 *3,82*	23,1 *3,96*	22,8 *4,11*	22,5 *4,24*	21,9 *4,51*	21,1 *4,77*	20,2 *5,01*	19,2 *5,23*	18,1 *5,43*	16,8 *5,62*		
50-315B No EN 733	7,5	132M	31,3 *2,35*	31,4 *3,54*	31,4 *3,78*	31,3 *4,01*	31,3 *4,24*	31,2 *4,47*	30,9 *4,68*	30,6 *4,89*	30,3 *5,08*	29,9 *5,27*	29,5 *5,46*	29,1 *5,64*	28,2 *5,99*	27,3 *6,32*	26,5 *6,61*	25,5 *6,89*	24,4 *7,14*	23,1 *7,37*	21,6 *7,58*	
50-315A No EN 733	11	160M	37,5 *3,06*	37,2 *4,39*	37,2 *4,65*	37,1 *4,92*	37,0 *5,18*	36,9 *5,45*	36,7 *5,72*	36,5 *5,97*	36,3 *6,22*	36,0 *6,45*	35,6 *6,68*	35,2 *6,90*	34,3 *7,31*	33,3 *7,69*	32,1 *8,04*	30,9 *8,37*	29,7 *8,69*	28,4 *8,96*	26,9 *9,18*	25,1 *9,37*

TYPE - 60 Hz	P2	Motor Size	Q (m³/h - l/min)																		
			0	18	21	24	27	30	33	36	39	42	45	48	54	60	66	72	78	84	90
			0	300	350	400	450	500	550	600	650	700	750	800	900	1000	1100	1200	1300	1400	1500
	kW		H (m) / *pump input power (kW)*																		
65-125B	0,75	80M	4,9 *0,31*	5,1 *0,48*	5,1 *0,50*	5,0 *0,53*	5,0 *0,55*	4,9 *0,57*	4,7 *0,60*	4,6 *0,63*	4,5 *0,64*	4,3 *0,66*	4,0 *0,67*	3,8 *0,68*	3,3 *0,69*	2,8 *0,68*					
65-125A	1,1	90S	6,1 *0,40*	6,3 *0,60*	6,2 *0,63*	6,1 *0,66*	6,1 *0,69*	6,0 *0,73*	5,9 *0,76*	5,8 *0,79*	5,7 *0,80*	5,5 *0,82*	5,3 *0,83*	5,0 *0,85*	4,7 *0,86*	4,3 *0,88*	3,7 *0,88*	3,0 *0,88*			
65-160C	1,5	90L	7,3 *0,44*			7,6 *0,80*	7,5 *0,85*	7,3 *0,89*	7,2 *0,93*	7,0 *0,96*	6,8 *0,99*	6,7 *1,01*	6,4 *1,02*	6,2 *1,04*	5,7 *1,07*	5,1 *1,12*	4,4 *1,13*	3,6 *1,13*	2,9 *1,13*		
65-160B	1,5	90L	8,4 *0,47*			8,6 *0,86*	8,4 *0,90*	8,3 *0,95*	8,2 *1,01*	8,0 *1,06*	7,8 *1,11*	7,6 *1,14*	7,4 *1,17*	7,2 *1,19*	6,5 *1,25*	5,9 *1,28*	5,2 *1,31*	4,4 *1,33*	3,6 *1,34*		
65-160A	2,2	100L	9,8 *0,66*			9,9 *1,06*	9,9 *1,14*	9,8 *1,20*	9,6 *1,25*	9,5 *1,30*	9,3 *1,34*	9,1 *1,39*	8,9 *1,42*	8,7 *1,46*	8,2 *1,52*	7,6 *1,58*	6,8 *1,63*	6,1 *1,67*	5,3 *1,72*	4,6 *1,72*	
65-200C	2,2	100L	11,0 *0,48*				11,6 *1,26*	11,5 *1,35*	11,4 *1,44*	11,3 *1,53*	11,2 *1,60*	10,9 *1,66*	10,5 *1,72*	10,3 *1,79*	9,7 *1,90*	9,1 *1,96*	8,3 *2,01*	7,4 *2,06*	6,5 *2,11*	5,0 *2,14*	
65-200B	3	100L	12,3 *0,69*				13,1 *1,45*	13,0 *1,51*	12,8 *1,61*	12,7 *1,70*	12,5 *1,77*	12,3 *1,88*	12,1 *1,95*	11,9 *2,01*	11,3 *2,11*	10,6 *2,21*	10,0 *2,29*	9,0 *2,36*	8,0 *2,42*	7,0 *2,48*	
65-200A	3	100L	14,0 *1,12*				14,8 *1,74*	14,7 *1,82*	14,6 *1,92*	14,5 *2,02*	14,2 *2,10*	14,0 *2,18*	13,9 *2,26*	13,7 *2,34*	13,3 *2,48*	12,7 *2,59*	12,0 *2,70*	11,3 *2,81*	10,3 *2,91*	9,3 *3,00*	
65-250B	4 5,5	112M 132S	20,6 *1,42*				21,0 *2,87*	20,8 *2,98*	20,4 *3,18*	20,1 *3,38*	19,8 *3,50*	19,3 *3,61*	18,8 *3,70*	18,4 *3,78*	17,3 *3,87*	16,0 *3,97*	14,5 *4,07*	12,9 *4,17*	11,2 *4,19*	8,7 *4,21*	
65-250A	5,5	132S	22,8 *1,58*					22,9 *3,41*	22,5 *3,56*	22,1 *3,70*	21,7 *3,79*	21,4 *3,88*	20,9 *4,00*	20,4 *4,11*	19,2 *4,31*	18,0 *4,44*	16,9 *4,58*	15,4 *4,71*	13,6 *4,75*	11,5 *4,79*	8,8 *4,80*

TYPE - 60 Hz	P2	Motor Size	Q (m³/h - l/min)																							
			0	27	30	33	36	39	42	45	48	54	60	66	72	78	84	90	96	102	108	114	120	126	132	138
			0	450	500	550	600	650	700	750	800	900	1000	1100	1200	1300	1400	1500	1600	1700	1800	1900	2000	2100	2200	2300
	kW		H (m) / *pump input power (kW)*																							
65-315CM	7,5	132M	22,2 *1,82*	23,3 *3,30*	23,3 *3,46*	23,2 *3,63*	23,1 *3,79*	23,0 *3,95*	22,9 *4,11*	22,8 *4,27*	22,6 *4,42*	22,1 *4,72*	21,6 *5,02*	21,2 *5,30*	20,7 *5,57*	20,2 *5,84*	19,6 *6,10*	18,9 *6,36*	18,2 *6,60*	17,4 *6,84*	16,5 *7,06*	15,6 *7,27*	14,5 *7,47*	13,5 *7,66*		
65-315BM	11	160M	27,4 *2,47*	28,2 *4,17*	28,2 *4,37*	28,2 *4,58*	28,2 *4,78*	28,1 *4,98*	28,0 *5,17*	27,8 *5,36*	27,6 *5,54*	27,2 *5,91*	26,7 *6,26*	26,2 *6,60*	25,7 *6,93*	25,2 *7,26*	24,6 *7,57*	24,1 *7,88*	23,4 *8,18*	22,7 *8,47*	21,8 *8,76*	20,8 *9,03*	19,8 *9,29*	18,9 *9,54*	18,1 *9,78*	
65-315AM	11	160M	32,9 *3,20*	33,4 *5,15*	33,4 *5,38*	33,4 *5,60*	33,3 *5,83*	33,3 *6,04*	33,2 *6,25*	33,1 *6,46*	32,9 *6,67*	32,3 *7,12*	31,8 *7,55*	31,2 *7,97*	30,6 *8,36*	30,0 *8,75*	29,4 *9,10*	28,7 *9,44*	28,1 *9,77*	27,3 *10,10*	26,4 *10,44*	25,3 *10,78*	24,2 *11,11*	23,2 *11,41*	22,1 *11,68*	20,9 *11,94*

TYPE - 60 Hz	P2	Motor Size	Q (m³/h - l/min)															
			0	24	27	30	33	36	42	48	60	72	84	96	102	108	120	132	144
			0	400	450	500	550	600	700	800	1000	1200	1400	1600	1700	1800	2000	2200	2400
	kW		H (m) / *pump input power (kW)*																
80-160E	1,1	90S	5,5 *0,35*	5,7 *0,71*	5,7 *0,74*	5,7 *0,74*	5,6 *0,78*	5,4 *0,81*	5,1 *0,88*	4,9 *0,90*	4,2 *0,97*	3,8 *1,02*	2,8 *1,02*	2,2 *1,00*					
80-160D	1,5	90L	6,3 *0,61*		6,8 *0,89*	6,7 *0,91*	6,6 *0,95*	6,5 *0,98*	6,3 *1,04*	6,1 *1,10*	5,5 *1,19*	4,8 *1,25*	4 *1,28*	3,1 *1,30*	2,6 *1,29*				
80-160C	1,5	90L	7,0 *0,67*			7,4 *1,04*	7,3 *1,08*	7,3 *1,12*	7,1 *1,18*	6,8 *1,25*	6,4 *1,35*	5,7 *1,42*	4,9 *1,47*	4 *1,48*	3,5 *1,48*	3,1 *1,48*			
80-160B	2,2	100L	8,5 *0,62*				8,9 *1,29*	8,9 *1,35*	8,7 *1,43*	8,5 *1,51*	8,0 *1,72*	7,5 *1,87*	6,8 *1,95*	5,7 *2,01*	5,2 *2,02*	4,7 *2,04*	3,5 *2,04*		
80-160A	3	100L	9,3 *1,09*					9,8 *1,60*	9,7 *1,71*	9,5 *1,81*	9,1 *2,01*	8,6 *2,14*	7,9 *2,27*	7,1 *2,34*	6,6 *2,37*	6,2 *2,39*	5,0 *2,42*	3,8 *2,43*	
80-200B	4	112M	12,2 *1,35*						13,1 *2,43*	12,9 *2,59*	12,4 *2,91*	11,9 *3,18*	11,4 *3,40*	10,7 *3,55*	10,2 *3,62*	9,6 *3,69*	8,2 *3,79*	6,8 *3,81*	
80-200A	5,5	132S	13,7 *1,51*						14,9 *2,81*	14,8 *2,99*	14,3 *3,33*	13,8 *3,62*	13,2 *3,85*	12,5 *4,05*	12,0 *4,15*	11,5 *4,23*	10,3 *4,38*	8,9 *4,47*	7,3 *4,51*
80-250B	5,5	132S	19,1 *1,76*						19,2 *3,67*	19,1 *3,93*	18,5 *4,49*	17,9 *4,98*	17,2 *5,35*	16,2 *5,63*	15,7 *5,75*	15,1 *5,86*	13,7 *6,05*	12,2 *6,20*	
80-250A	7,5	132M	22,3 *2,22*						23,0 *4,45*	22,7 *4,74*	22,1 *5,32*	21,4 *5,83*	20,4 *6,22*	19,2 *6,59*	18,6 *6,76*	18,0 *6,91*	16,8 *7,17*	15,3 *7,39*	13,6 *7,55*

4MA-4MAX ~ *EN 733*

TYPE - 60 Hz	P2	Motor Size	Q (m³/h - l/min)														
			0	42	48	60	72	84	96	102	108	120	132	144	150	156	168
			0	700	800	1000	1200	1400	1600	1700	1800	2000	2200	2400	2500	2600	2800
	kW		H (m) *pump input power (kW)*														
80-315B	11	160M	27,7 *2,99*	28,3 *5,48*	28,2 *5,88*	27,9 *6,67*	27,2 *7,42*	26,4 *8,09*	25,4 *8,67*	24,9 *8,95*	24,4 *9,21*	23,3 *9,74*	21,9 *10,28*	20,5 *10,66*	19,9 *10,85*		
80-315A	15	160L	34,5 *4,29*	35,0 *7,30*	34,9 *7,78*	34,6 *8,75*	34,0 *9,66*	33,3 *10,53*	32,4 *11,37*	31,9 *11,77*	31,3 *12,17*	30,1 *12,91*	28,8 *13,50*	27,3 *14,05*	26,4 *14,31*	25,5 *14,56*	23,7 *15,04*

TYPE - 60 Hz	P2	Motor Size	Q (m³/h - l/min)																
			0	48	60	72	84	96	102	108	120	132	144	150	156	168	180	192	204
			0	800	1000	1200	1400	1600	1700	1800	2000	2200	2400	2500	2600	2800	3000	3200	3400
	kW		H (m) *pump input power (kW)*																
100-200D	4	112M	10,7 *2,82*	10,4 *3,09*	10,2 *3,29*	9,8 *3,39*	9,4 *3,44*	8,7 *3,46*	8,4 *3,48*	8,1 *3,49*	7,5 *3,55*	6,9 *3,60*	6,1 *3,69*	5,7 *3,71*	5,3 *3,72*	4,4 *3,70*			
100-200C	5,5	132S	12,5 *3,03*	12,5 *3,54*	12,3 *3,88*	12,0 *4,02*	11,5 *4,13*	10,9 *4,18*	10,6 *4,21*	10,3 *4,24*	9,7 *4,35*	9,1 *4,45*	8,3 *4,52*	8,0 *4,54*	7,4 *4,57*	6,5 *4,58*			
100-200B	5,5	132S	14,3 *2,81*	14,3 *3,57*	14,2 *3,82*	13,9 *4,07*	13,5 *4,32*	13,0 *4,56*	12,7 *4,66*	12,4 *4,76*	11,9 *4,94*	11,2 *5,07*	10,5 *5,16*	10,0 *5,20*	9,6 *5,23*	8,6 *5,26*	7,6 *5,27*		
100-200A	7,5	132M	15,9 *3,12*	16,0 *4,06*	15,9 *4,35*	15,7 *4,63*	15,3 *4,93*	14,9 *5,25*	14,6 *5,40*	14,4 *5,54*	13,9 *5,80*	13,3 *6,00*	12,7 *6,15*	12,3 *6,20*	11,9 *6,26*	10,9 *6,36*	9,9 *6,43*	8,8 *6,47*	
100-250E	7,5	132M	18,0 *3,08*		18,1 *4,89*	18,0 *5,29*	17,7 *5,67*	17,3 *6,02*	17,1 *6,19*	16,8 *6,37*	16,0 *6,70*	15,1 *6,99*	14,2 *7,24*	13,7 *7,35*	13,1 *7,45*	12,0 *7,61*	10,6 *7,73*		
100-250D	7,5	132M	21,2 *3,40*		21,1 *5,67*	20,8 *6,13*	20,5 *6,55*	20,1 *6,92*	19,8 *7,10*	19,5 *7,27*	18,8 *7,60*	17,9 *7,94*	16,8 *8,25*	16,3 *8,38*	15,7 *8,49*	14,5 *8,69*	13,2 *8,85*	11,8 *9,00*	
	11	160M																	
100-250A	11	160M	24,3 *3,97*		23,9 *6,41*	23,6 *6,94*	23,2 *7,44*	22,7 *7,90*	22,4 *8,12*	22,1 *8,32*	21,4 *8,70*	20,6 *9,06*	19,5 *9,40*	19,0 *9,55*	18,3 *9,69*	17,0 *9,92*	15,6 *10,11*	14,2 *10,27*	12,7 *10,43*

TYPE - 60 Hz	P2	Motor Size	Q (m³/h - l/min)															
			0	72	84	96	102	108	120	132	144	150	156	168	180	192	204	216
			0	1200	1400	1600	1700	1800	2000	2200	2400	2500	2600	2800	3000	3200	3400	3600
	kW		H (m) *pump input power (kW)*															
100-315B	15	160L	31,1 *5,27*	31,5 *9,67*	30,7 *10,42*	29,8 *11,09*	29,3 *11,41*	28,9 *11,71*	27,9 *12,27*	26,9 *12,79*	26,0 *13,27*	25,5 *13,50*	25,0 *13,72*	23,8 *14,12*	22,4 *14,50*	20,7 *14,84*	19,0 *15,14*	17,3 *15,39*
100-315A	18,5	180M	36,3 *6,29*	36,8 *11,39*	36,0 *12,31*	35,0 *13,12*	34,5 *13,49*	34,0 *13,84*	33,1 *14,51*	32,2 *15,12*	31,2 *15,69*	30,7 *15,97*	30,1 *16,23*	29,0 *16,76*	27,7 *17,26*	26,2 *17,71*	24,5 *18,11*	22,7 *18,46*

TYPE - 60 Hz	P2	Motor Size	Q (m³/h - l/min)																	
			0	84	96	102	108	120	132	144	150	156	168	180	192	204	216	228	240	252
			0	1400	1600	1700	1800	2000	2200	2400	2500	2600	2800	3000	3200	3400	3600	3800	4000	4200
	kW		H (m) *pump input power (kW)*																	
100-400C	22	180L	41,8 *7,59*	41,2 *14,71*	40,2 *15,77*	39,6 *16,29*	39,1 *16,77*	38,0 *17,58*	36,9 *18,31*	35,8 *19,06*	35,2 *19,42*	34,6 *19,78*	33,4 *20,48*	32,2 *21,14*	30,7 *21,72*	29,1 *22,24*	27,3 *22,71*	25,5 *23,18*		
100-400B	30	200L	50,0 *9,48*	49,1 *18,22*	48,4 *19,48*	47,9 *20,10*	47,5 *20,70*	46,4 *21,84*	45,2 *22,92*	44,0 *23,89*	43,3 *24,35*	47,2 *24,80*	41,5 *25,66*	40,3 *26,49*	38,9 *27,38*	37,3 *28,21*	35,6 *28,88*	33,8 *29,47*	31,8 *30,00*	
100-400A	37	225S	58,6 *11,70*	57,5 *21,90*	56,7 *23,46*	56,3 *24,23*	55,8 *24,96*	54,8 *26,30*	53,6 *27,56*	52,4 *28,74*	51,7 *29,31*	51,1 *29,87*	49,7 *31,02*	48,3 *32,13*	47,2 *33,18*	46,1 *34,16*	44,6 *35,04*	42,6 *35,79*	40,5 *36,47*	38,5 *37,10*

TYPE - 60 Hz	P2	Motor Size	Q (m³/h - l/min)																	
			0	102	108	120	132	144	150	156	168	180	192	204	216	228	240	252	276
			0	1700	1800	2000	2200	2400	2500	2600	2800	3000	3200	3400	3600	3800	4000	4200	4600
	kW		H (m) *pump input power (kW)*																
125-250B	11	160M	21,0 *7,40*	21,9 *9,38*	21,6 *9,50*	20,9 *9,70*	20,1 *9,88*	19,4 *10,09*	19,0 *10,20*	18,5 *10,31*	17,9 *10,52*	17,1 *10,72*	16,2 *10,89*	15,1 *11,03*	13,9 *11,12*	12,6 *11,16*	11,5 *11,15*	10,2 *11,08*	
125-250A	15	160L	25,0 *8,48*	26,4 *11,32*	26,1 *11,53*	25,6 *11,92*	25,0 *12,25*	24,3 *12,57*	24,0 *12,75*	23,8 *12,96*	23,2 *13,41*	22,5 *13,79*	21,7 *14,13*	20,8 *14,41*	19,8 *14,64*	18,7 *14,84*	17,5 *15,01*	16,3 *15,13*	13,7 *15,22*

TYPE - 60 Hz	P2	Motor Size	Q (m³/h - l/min)																	
			0	120	132	144	150	156	168	180	192	204	216	228	240	252	276	348	372	396
			0	2000	2200	2400	2500	2600	2800	3000	3200	3400	3600	3800	4000	4200	4600	5800	6200	6600
	kW		H (m) *pump input power (kW)*																	
125-315C	22	180L	22,7 *7,94*	24,6 *13,06*	24,4 *13,61*	24,1 *14,19*	24,0 *14,49*	23,8 *14,79*	23,5 *15,40*	23,2 *16,00*	22,8 *16,61*	22,5 *17,20*	22,2 *17,76*	21,9 *18,30*	21,4 *18,80*	20,8 *19,26*	19,1 *20,06*	12,3 *21,35*		
125-315B	30	200L	30,1 *10,95*	31,9 *17,09*	31,9 *17,84*	31,7 *18,58*	31,6 *18,96*	31,5 *19,35*	31,3 *20,17*	31,0 *21,04*	30,6 *21,89*	30,3 *22,64*	30,0 *23,31*	29,7 *23,94*	29,3 *24,60*	28,9 *25,31*	27,8 *26,68*	22,2 *29,64*	20,3 *30,62*	
125-315A	37	225S	34,7 *12,41*	37,1 *20,09*	37,2 *21,03*	37,1 *22,01*	37,0 *22,50*	36,9 *22,99*	36,7 *23,95*	36,4 *24,86*	36,1 *25,74*	35,8 *26,59*	35,5 *27,39*	35,1 *28,13*	34,7 *28,85*	34,3 *29,57*	33,3 *31,09*	28,9 *35,18*	26,8 *36,24*	
125-400C	45	225M	46,2 *13,91*	47,6 *24,65*	47,5 *25,83*	47,2 *27,03*	47,0 *27,62*	46,9 *28,20*	46,5 *29,31*	46,1 *30,30*	45,7 *31,22*	45,2 *32,17*	44,7 *33,24*	44,2 *34,42*	43,7 *35,62*	43,2 *36,73*	42,4 *38,53*	36,5 *43,95*	33,8 *45,52*	
125-400B	55	250M	53,4 *16,79*	54,5 *28,74*	54,3 *30,15*	54,1 *31,55*	54,0 *32,25*	53,9 *32,94*	53,5 *34,30*	53,2 *35,60*	52,7 *36,85*	52,3 *38,07*	51,7 *39,30*	51,2 *40,56*	50,6 *41,82*	50,0 *43,06*	48,8 *45,43*	44,6 *51,75*	42,0 *53,55*	39,1 *55,27*
125-400A	75	280S	58,6 *18,95*	59,5 *31,66*	59,4 *33,20*	59,2 *34,74*	59,1 *35,52*	59,0 *36,29*	58,7 *37,81*	58,3 *39,30*	57,8 *40,77*	57,4 *42,22*	56,8 *43,66*	56,3 *45,09*	55,7 *46,50*	55,1 *47,87*	53,9 *50,49*	49,9 *57,63*	47,2 *59,76*	45,0 *61,83*

TYPE - 60 Hz	P2	Motor Size	Q (m³/h - l/min)																	
			0	144	150	156	168	180	192	204	216	228	240	252	276	348	372	396	444	492	540	564
			0	2400	2500	2600	2800	3000	3200	3400	3600	3800	4000	4200	4600	5800	6200	6600	7400	8200	9000	9400
	kW		H (m) *pump input power (kW)*																			
150-315D	30	200L	23,9 *15,21*	27,0 *20,50*	27,0 *20,74*	26,9 *20,99*	26,8 *21,50*	26,6 *22,01*	26,4 *22,53*	26,2 *23,04*	25,9 *23,53*	25,6 *24,00*	25,3 *24,44*	25,0 *24,85*	24,3 *25,63*	21,5 *27,81*	20,4 *28,56*	19,2 *29,30*	16,4 *30,78*			
150-315C	37	225S	28,4 *16,50*	31,8 *23,70*	31,8 *24,01*	31,8 *24,32*	31,8 *24,94*	31,7 *25,57*	31,5 *26,20*	31,4 *26,82*	31,2 *27,42*	31,0 *28,00*	30,8 *28,55*	30,5 *29,09*	29,9 *30,10*	27,5 *33,00*	26,6 *34,06*	25,7 *35,17*	23,2 *37,00*	19,6 *38,00*		
150-315B	45	225M	32,2 *18,32*	36,3 *26,50*	36,3 *26,85*	36,3 *27,21*	36,2 *27,93*	36,1 *28,65*	36,0 *29,37*	35,8 *30,09*	35,6 *30,80*	35,4 *31,50*	35,2 *32,18*	35,0 *32,86*	34,7 *34,19*	32,8 *38,00*	31,8 *39,24*	30,7 *40,48*	28,0 *42,60*	24,5 *44,00*	20,8 *45,50*	
150-315A	55	250M	39,4 *20,63*	41,0 *30,00*	41,0 *30,40*	40,9 *30,81*	40,8 *31,62*	40,7 *32,44*	40,5 *33,26*	40,4 *34,08*	40,2 *34,89*	40,0 *35,70*	39,8 *36,50*	39,6 *37,30*	39,2 *38,90*	37,6 *43,50*	36,9 *44,94*	36,0 *46,33*	34,1 *49,00*	31,7 *51,50*	28,0 *53,50*	26,0 *54,50*

TYPE - 60 Hz	P2	Motor Size	Q (m³/h - l/min)																			
			0	168	180	192	204	216	228	240	252	276	348	372	396	444	492	540	564	588	612
			0	2800	3000	3200	3400	3600	3800	4000	4200	4600	5800	6200	6600	7400	8200	9000	9400	9800	10200
	kW		H (m) *pump input power (kW)*																		
150-400C	75	280S	45,6 *20,78*	47,8 *35,35*	47,7 *36,41*	47,6 *37,46*	47,4 *38,54*	47,2 *39,58*	47,0 *40,43*	46,7 *41,65*	46,5 *42,62*	45,8 *44,48*	43,9 *50,44*	43,1 *52,51*	42,0 *54,34*	39,2 *57,61*	35,8 *60,59*	31,5 *63,18*	28,7 *64,43*		
150-400B	75	280S	52,8 *26,57*	54,4 *41,90*	54,2 *43,10*	53,9 *44,29*	57,3 *45,48*	53,5 *46,65*	53,2 *47,81*	52,9 *48,96*	52,6 *50,10*	51,8 *52,35*	50,3 *58,79*	49,8 *60,86*	48,9 *62,94*	46,1 *66,80*	42,9 *70,20*	39,1 *73,30*	36,7 *74,72*	34,3 *76,14*	
150-400A	90	280M	59,0 *29,82*	60,3 *47,01*	60,2 *48,30*	60,0 *49,59*	59,8 *50,88*	59,9 *52,18*	59,4 *53,48*	59,1 *54,78*	58,8 *56,10*	58,1 *58,76*	56,4 *66,15*	56,0 *68,45*	55,3 *70,93*	53,3 *75,79*	50,6 *79,82*	46,7 *83,73*	44,5 *85,61*	42,2 *87,41*	39,8 *89,16*

4MA - 4MAX ~ *1750 rpm*

Machines complementing the existing range, not envisaged in the EN 733 standard

TYPE - 60 Hz	P2	Motor Size	Q (m³/h - l/min)							
			0	200	250	400	600	800	850	900
			0	3333	4167	6667	10000	13333	14167	15000
	kW		H (m) *pump input power (kW)*							
200-315B	55	250M	33,4 *25,04*	33,4 *36,30*	33,2 *38,91*	32,2 *46,32*	28,6 *52,72*	21,7 *55,67*	19,4 *55,62*	16,7 *55,25*
200-315A	75	280S	36,3 *27,90*	35,9 *39,49*	35,8 *42,13*	35,0 *50,07*	31,8 *58,82*	24,9 *62,36*	22,5 *62,45*	19,8 *62,15*
200-400C	90	280M	43,0 *31,27*	44,1 *45,90*	44,1 *50,14*	43,6 *62,49*	39,9 *77,58*	31,5 *89,60*		
200-400B	110	315S	49,5 *40,00*	50,8 *54,29*	51,0 *58,92*	50,6 *73,89*	47,2 *91,32*	39,5 *105,65*	36,6 *108,43*	
200-400A	132	315M	57,2 *49,00*	58,5 *65,01*	58,6 *70,26*	58,2 *87,26*	55,2 *107,05*	48,2 *124,54*	45,6 *128,46*	44,0 *132,15*

TYPE - 60 Hz	P2	Motor Size	Q (m³/h - l/min)													
			0	250	400	600	800	850	900	1100	1170	1200	1300	1400	1500	1600
			0	4167	6667	10000	13333	14167	15000	18333	19500	20000	21667	23333	25000	26667
	kW		H (m) *pump input power (kW)*													
250-315B	75	280S	33,2 *43,46*	33,0 *54,77*	32,7 *61,20*	31,8 *68,72*	29,6 *74,57*	28,6 *75,26*	27,5 *75,64*	21,7 *74,47*	19,0 *73,35*					
250-315A	90	280M	35,8 *46,41*	35,0 *57,61*	34,4 *64,50*	33,3 *73,28*	31,3 *78,44*	30,4 *79,01*	29,3 *79,32*	23,0 *78,27*	20,7 *77,03*	20,0 *76,36*				
250-400D	110	315S	38,3	39,9	39,9	39,0	36,9	36,1	35,2	30,6	28,6	27,7	24,3			
	132	315M	*48,00*	*61,74*	*71,25*	*84,15*	*95,73*	*98,36*	*100,80*	*108,97*	*111,27*	*112,17*	*114,78*			
250-400C	132	315M	44,0	45,8	45,9	44,9	42,7	42,0	41,2	37,2	35,4	34,5	31,3	27,4		
	160	315L	*53,83*	*71,89*	*83,20*	*98,11*	*112,06*	*115,25*	*118,20*	*128,07*	*130,85*	*131,93*	*135,08*	*137,50*		
250-400B	160	315L	50,0	51,7	51,8	51,0	49,0	48,4	47,6	43,9	42,3	41,5	38,5	34,8	30,3	
	200	315L	*64,57*	*84,18*	*97,49*	*115,36*	*131,10*	*134,76*	*138,27*	*151,48*	*155,58*	*157,12*	*161,60*	*164,88*	*167,09*	
250-400A	200	315L	55,7 *70,94*	57,4 *91,89*	57,5 *106,81*	56,5 *127,19*	54,5 *145,00*	53,8 *149,18*	53,0 *153,24*	49,4 *168,92*	47,9 *173,94*	47,1 *175,86*	44,3 *181,62*	40,8 *186,11*	36,6 *189,07*	31,7 *190,57*

32-160

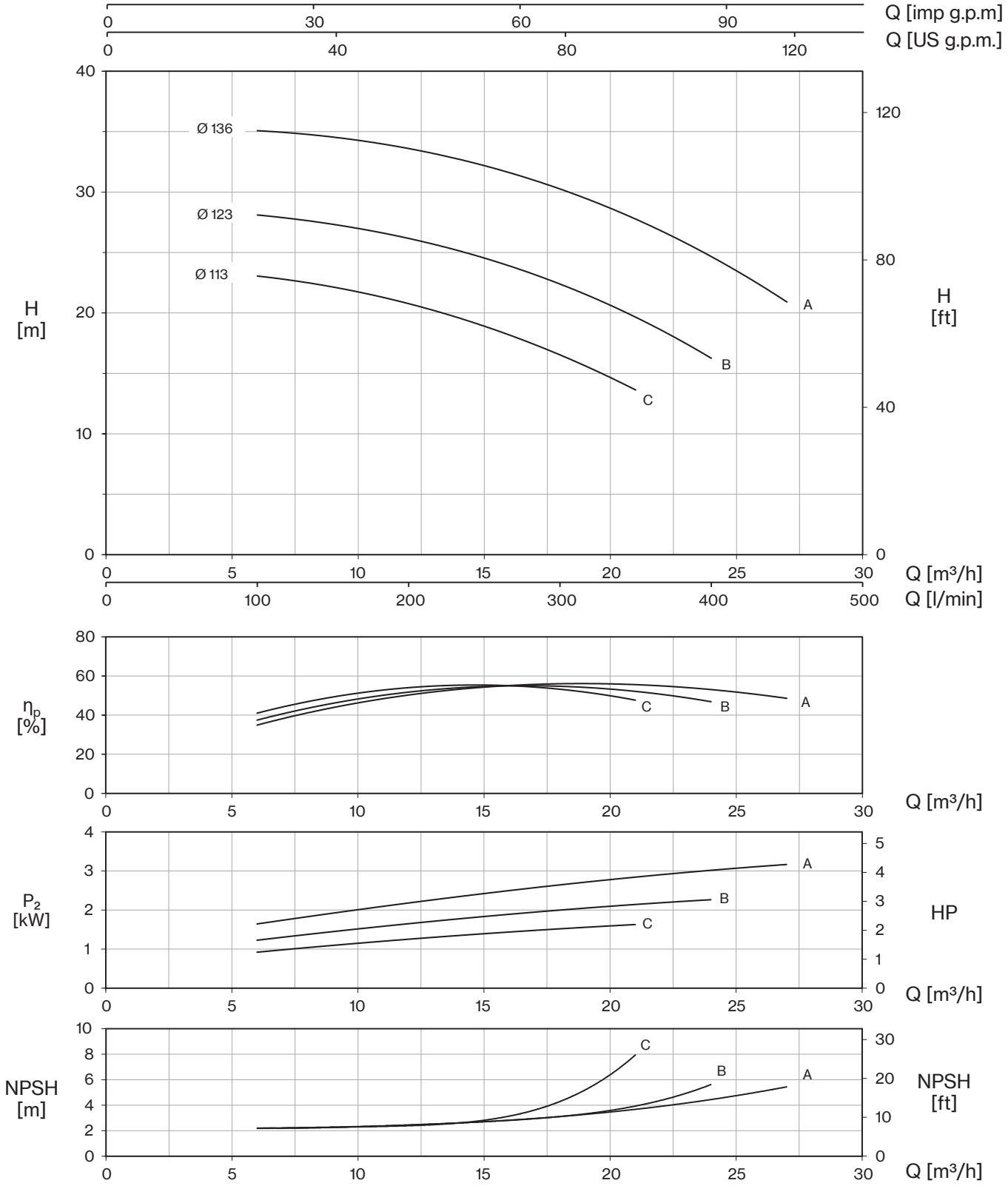
Q [imp g.p.m]
Q [US g.p.m.]
H [m]
H [ft]
Ø 136
Ø 123
Ø 113
A
B
C
Q [m³/h]
Q [l/min]
ηp [%]
P2 [kW]
HP
NPSH [m]
NPSH [ft]

32-200

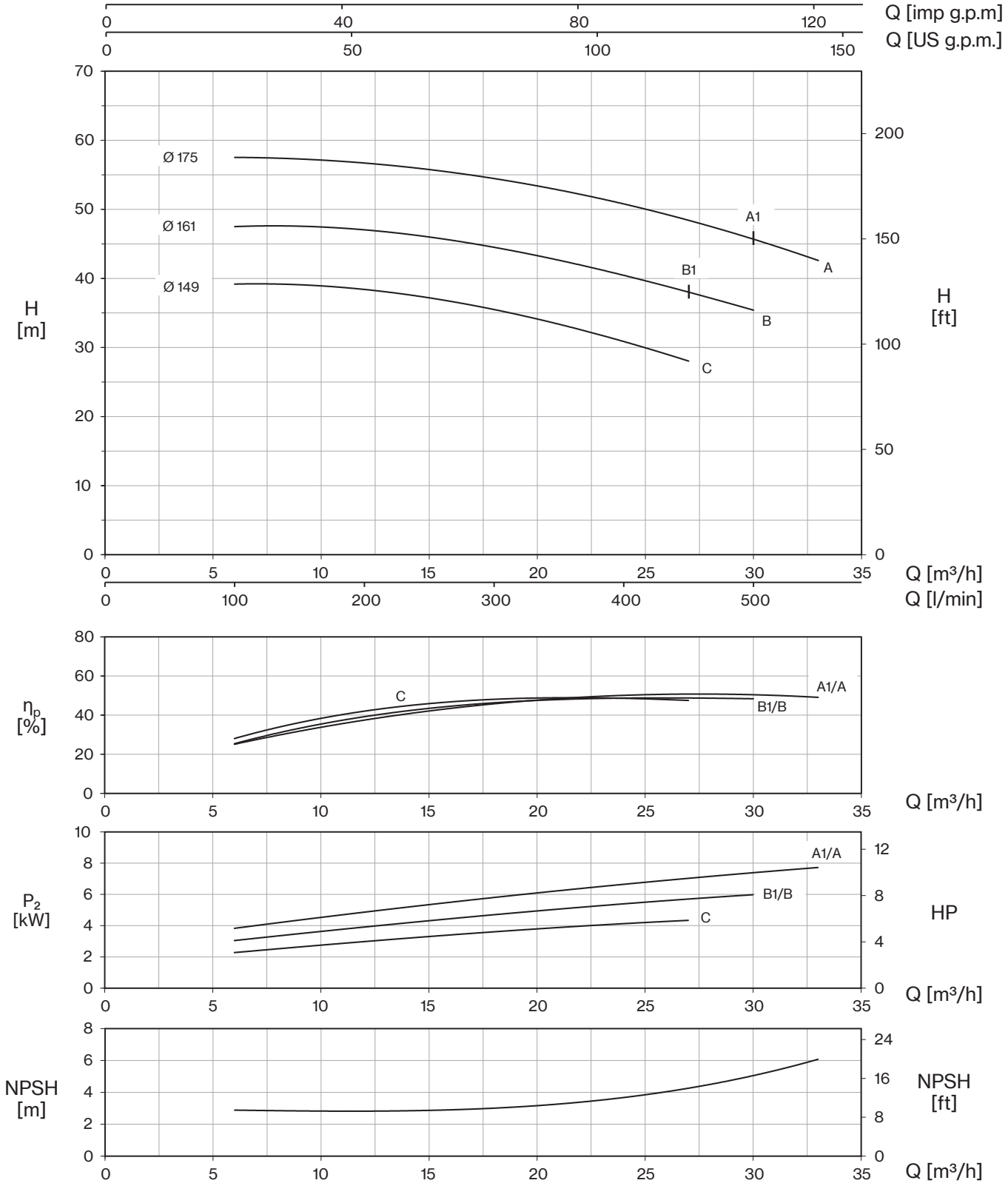

Tolerance: ISO 9906:2012 - Grade 3B
Check pumps availability on pages 92-93-94

32-250

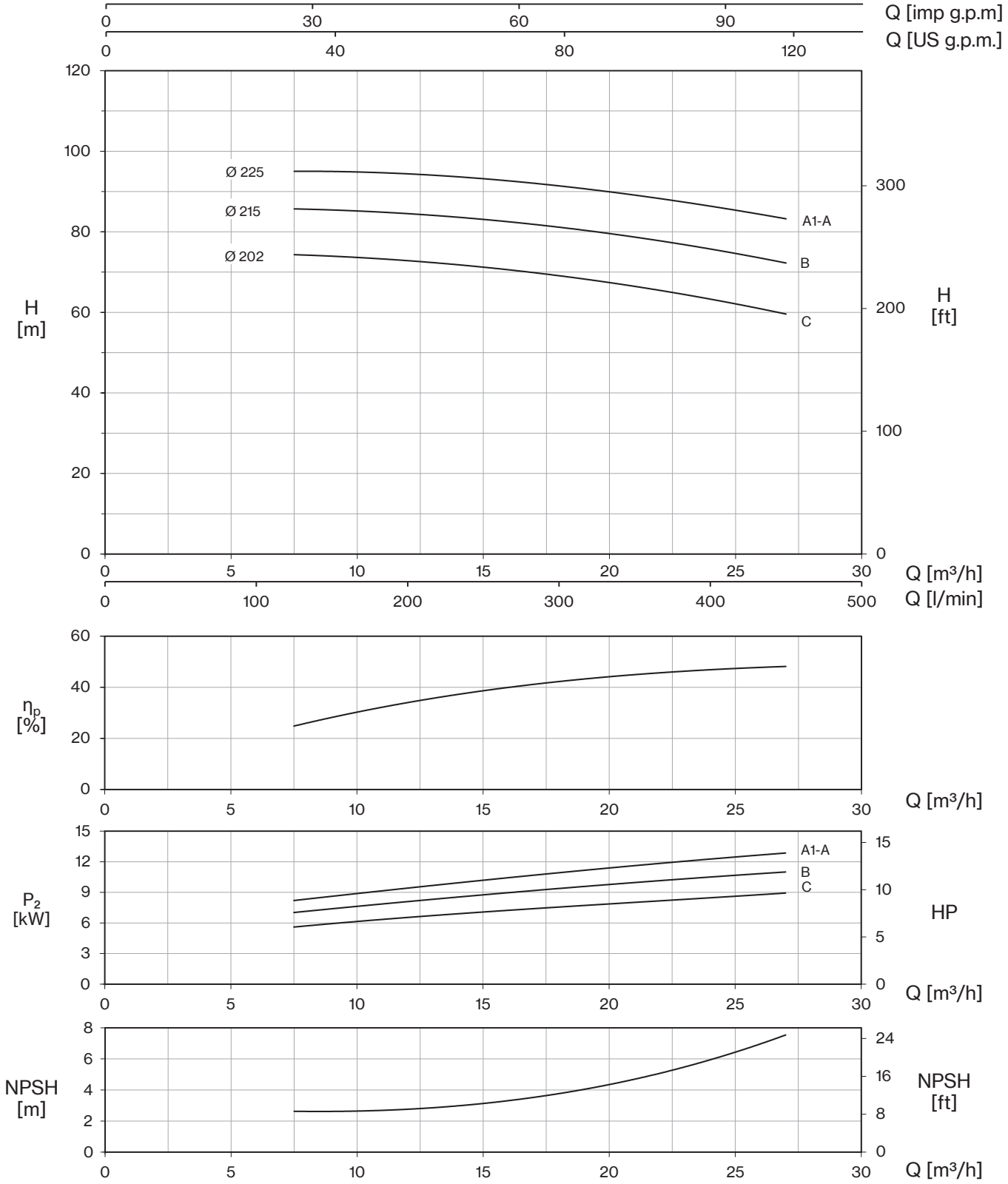
Q [imp g.p.m]
Q [US g.p.m.]
H [m]
H [ft]
Ø 225
Ø 215
Ø 202
A1-A
B
C
Q [m³/h]
Q [l/min]
ηp [%]
P2 [kW]
HP
NPSH [m]
NPSH [ft]

40-125

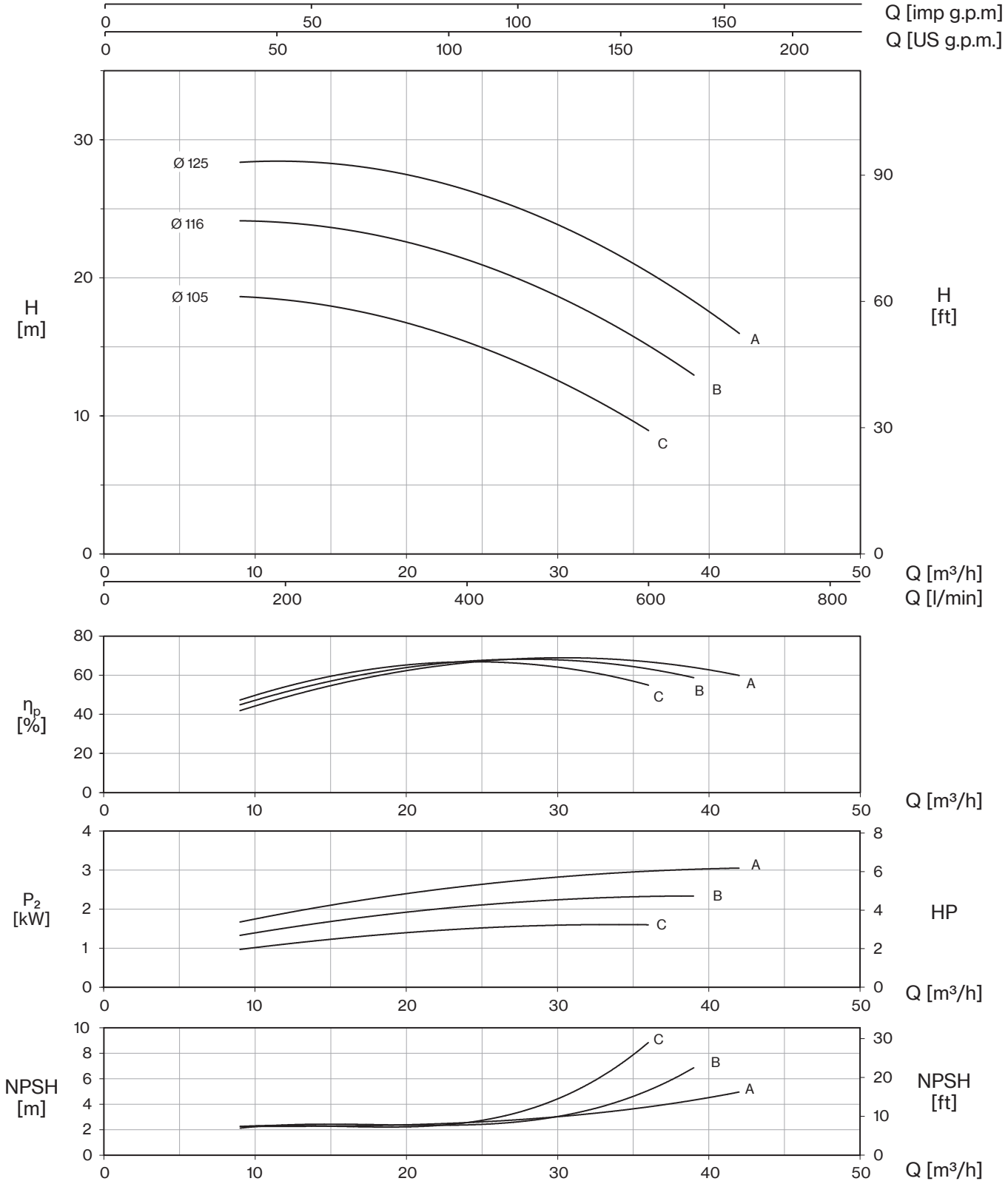

Tolerance: ISO 9906:2012 - Grade 3B
Check pumps availability on pages 92-93-94

40-160

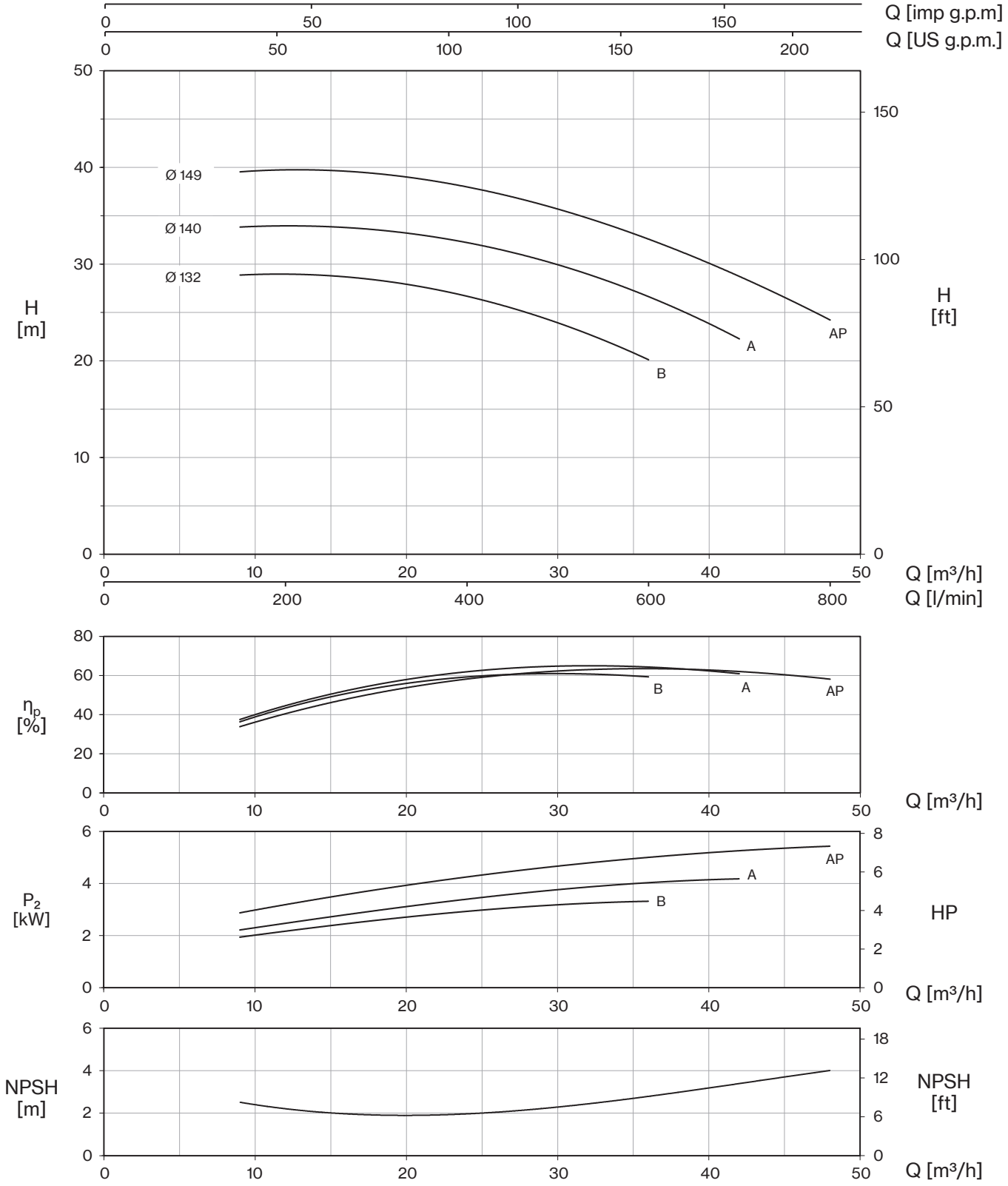
Q [imp g.p.m]
Q [US g.p.m.]
H [m]
H [ft]
Ø 149
Ø 140
Ø 132
AP
A
B
Q [m³/h]
Q [l/min]
ηp [%]
P2 [kW]
HP
NPSH [m]
NPSH [ft]

40-200

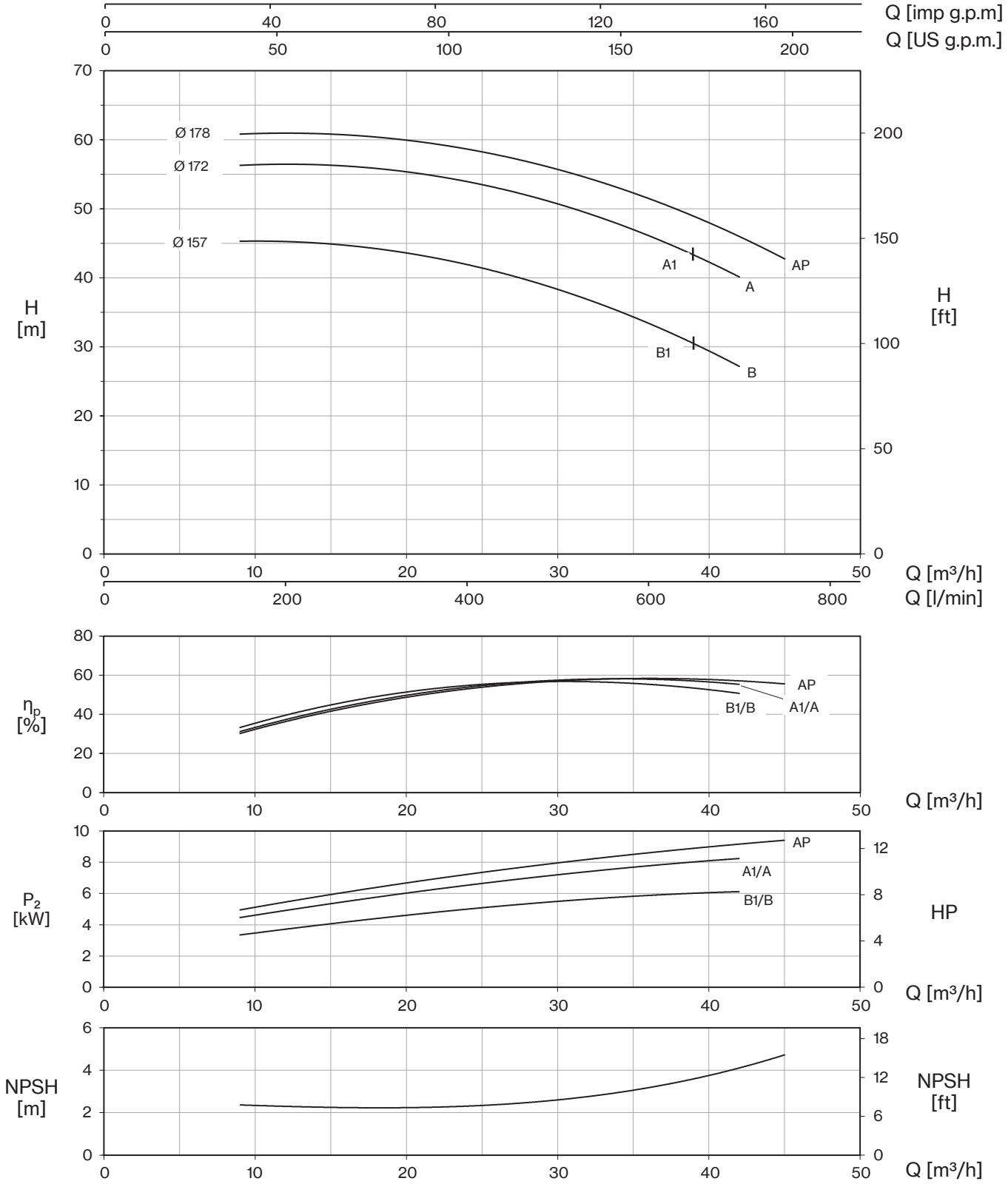

Tolerance: ISO 9906:2012 - Grade 3B
Check pumps availability on pages 92-93-94

40-250

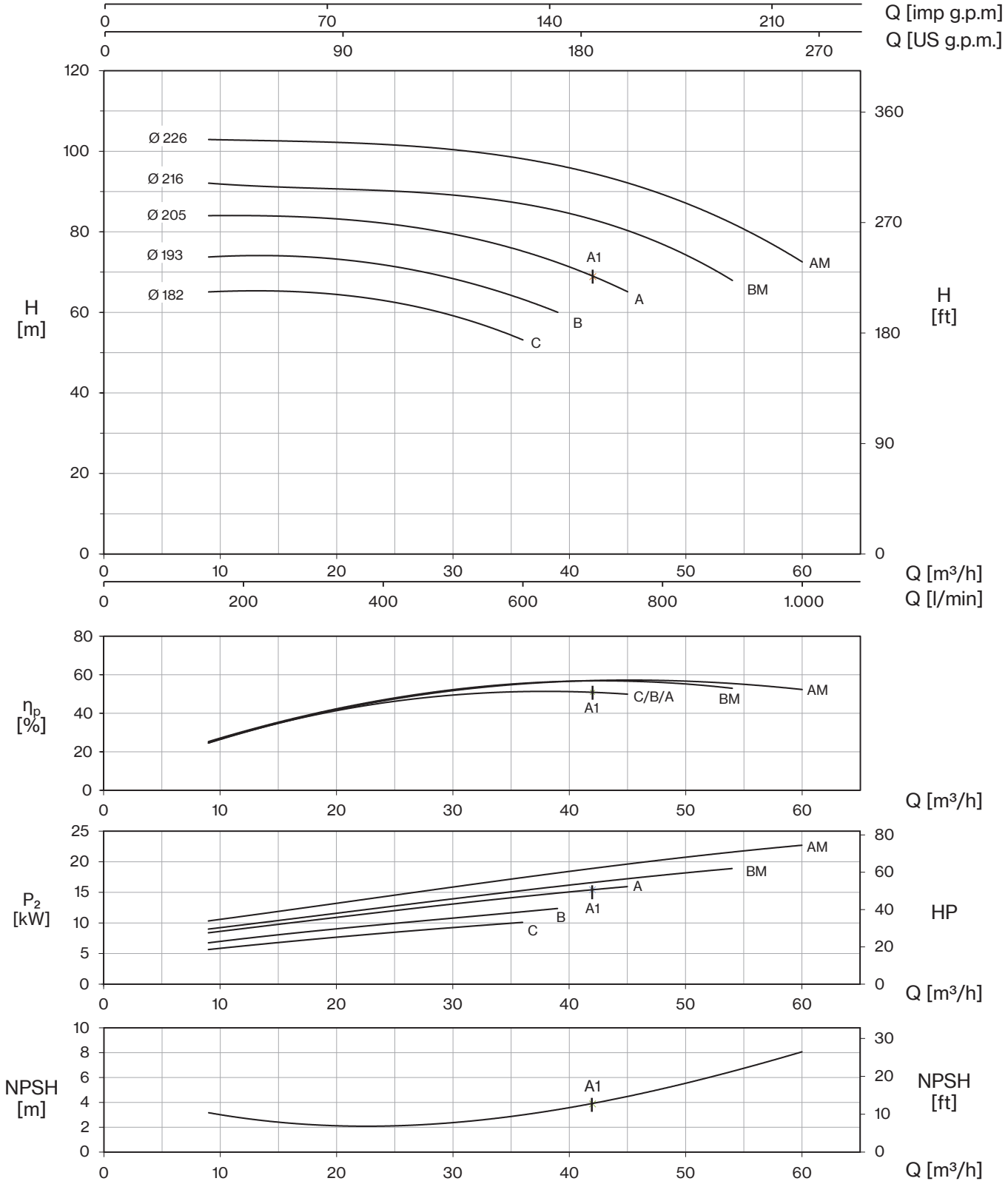
Q [imp g.p.m]
Q [US g.p.m.]
H [m]
H [ft]
Ø 226
Ø 216
Ø 205
Ø 193
Ø 182
A1
AM
A
BM
B
C
Q [m³/h]
Q [l/min]
ηp [%]
C/B/A
P2 [kW]
HP
NPSH [m]
NPSH [ft]

50-125

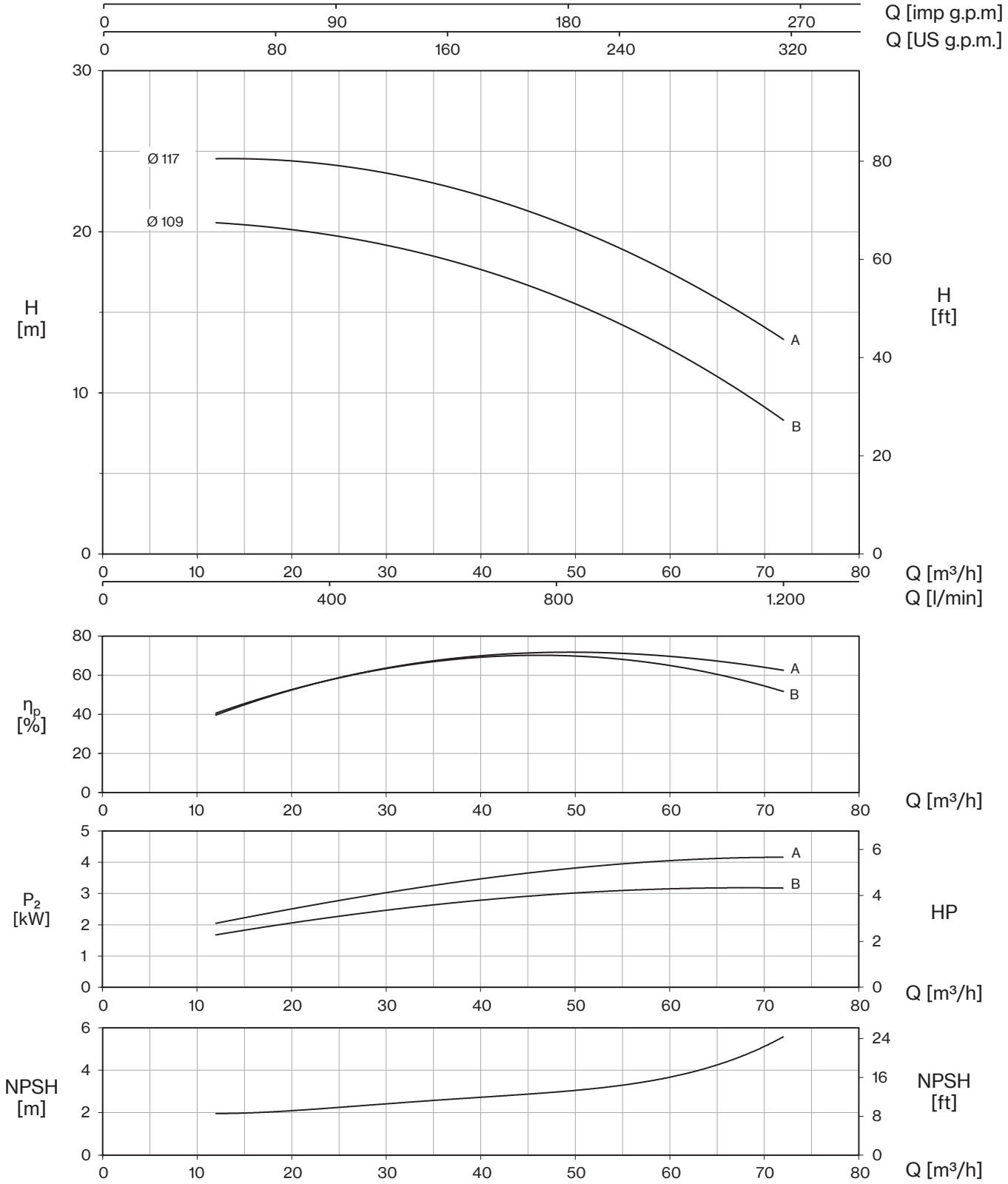

Tolerance: ISO 9906:2012 - Grade 3B
Check pumps availability on pages 92-93-94

50-160

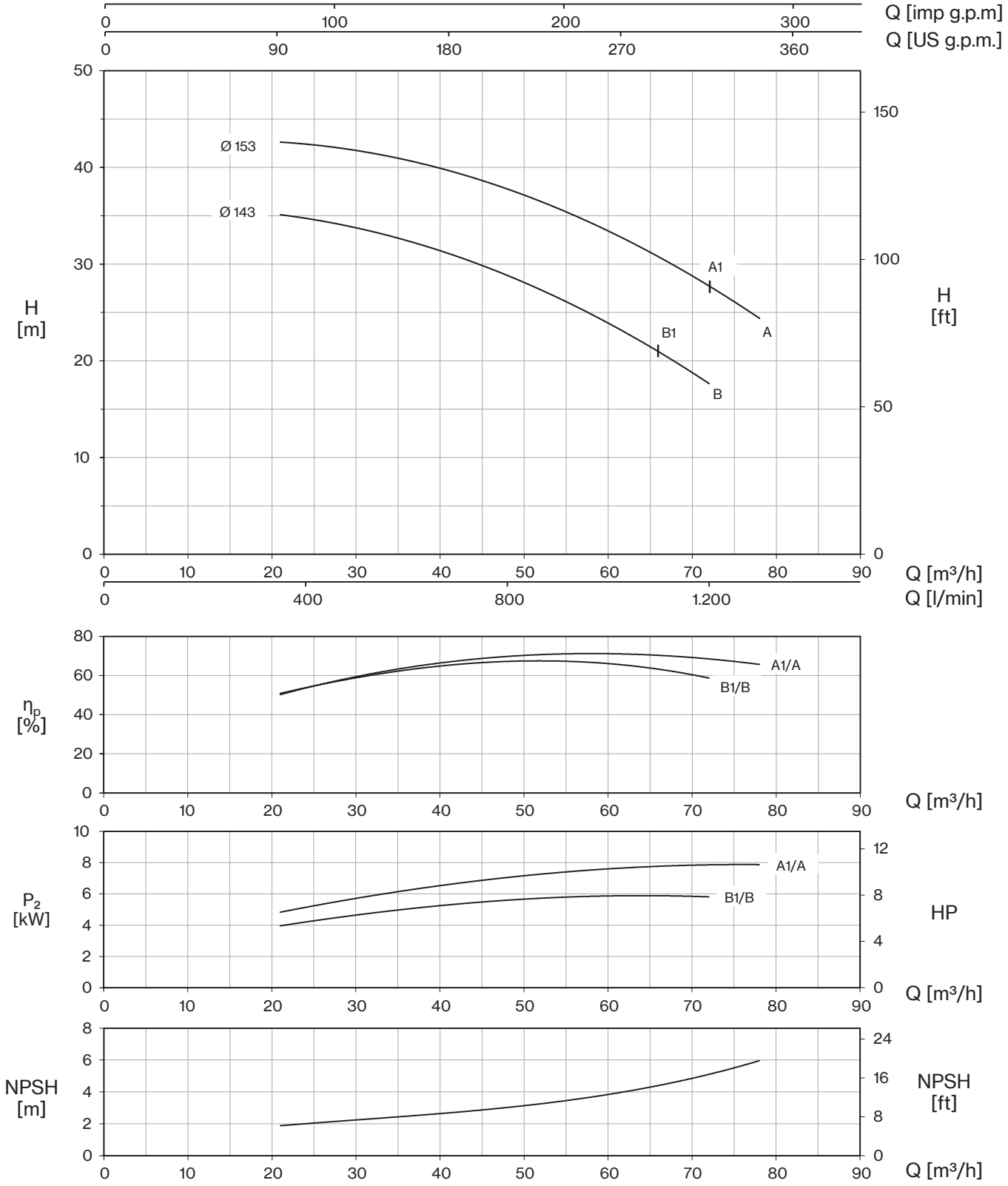
Q [imp g.p.m]
Q [US g.p.m.]
H [m]
H [ft]
Ø 153
Ø 143
A1
A
B1
B
Q [m³/h]
Q [l/min]
ηp [%]
A1/A
B1/B
P2 [kW]
HP
NPSH [m]
NPSH [ft]

50-200

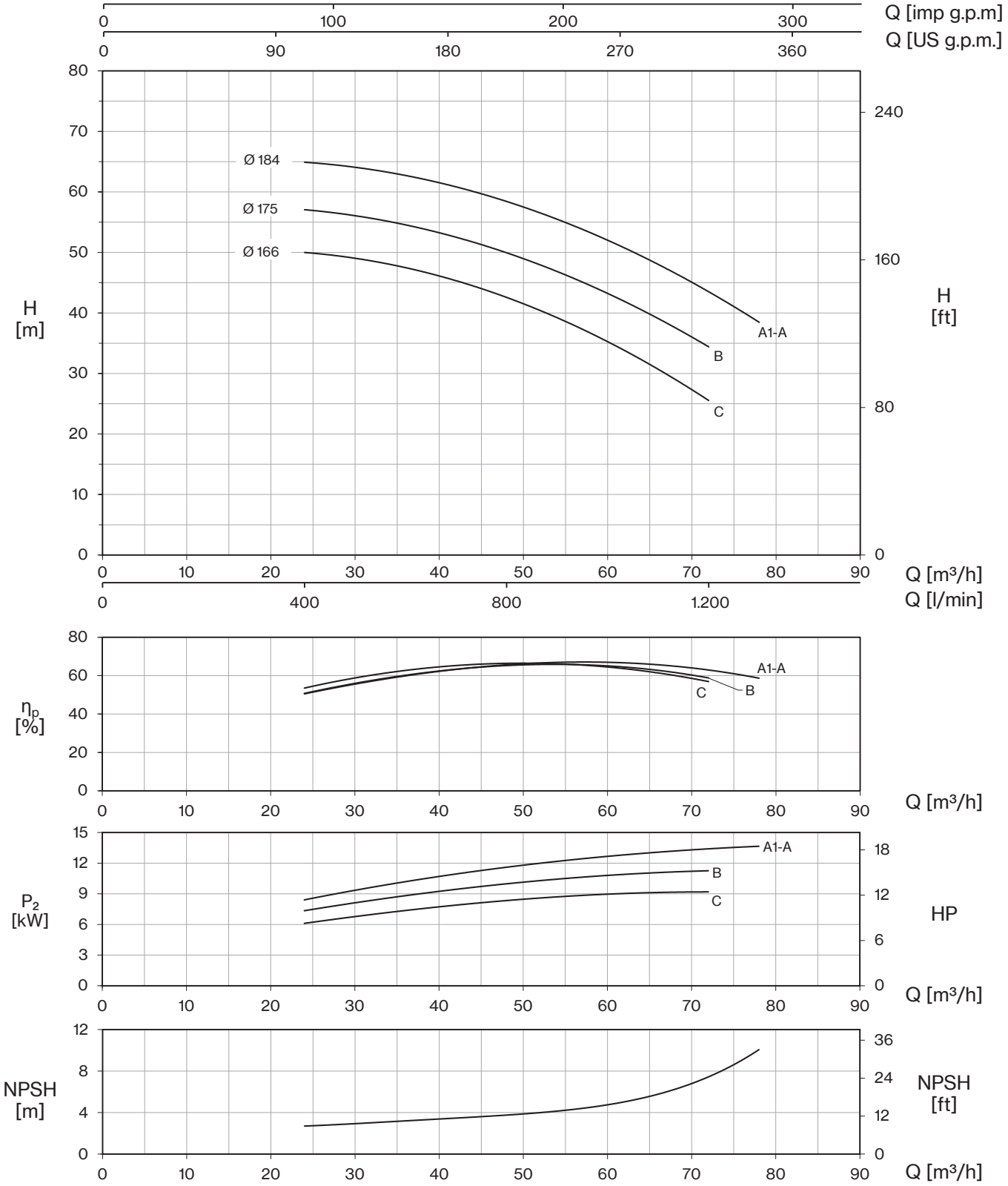

Tolerance: ISO 9906:2012 - Grade 3B
Check pumps availability on pages 92-93-94

50-250

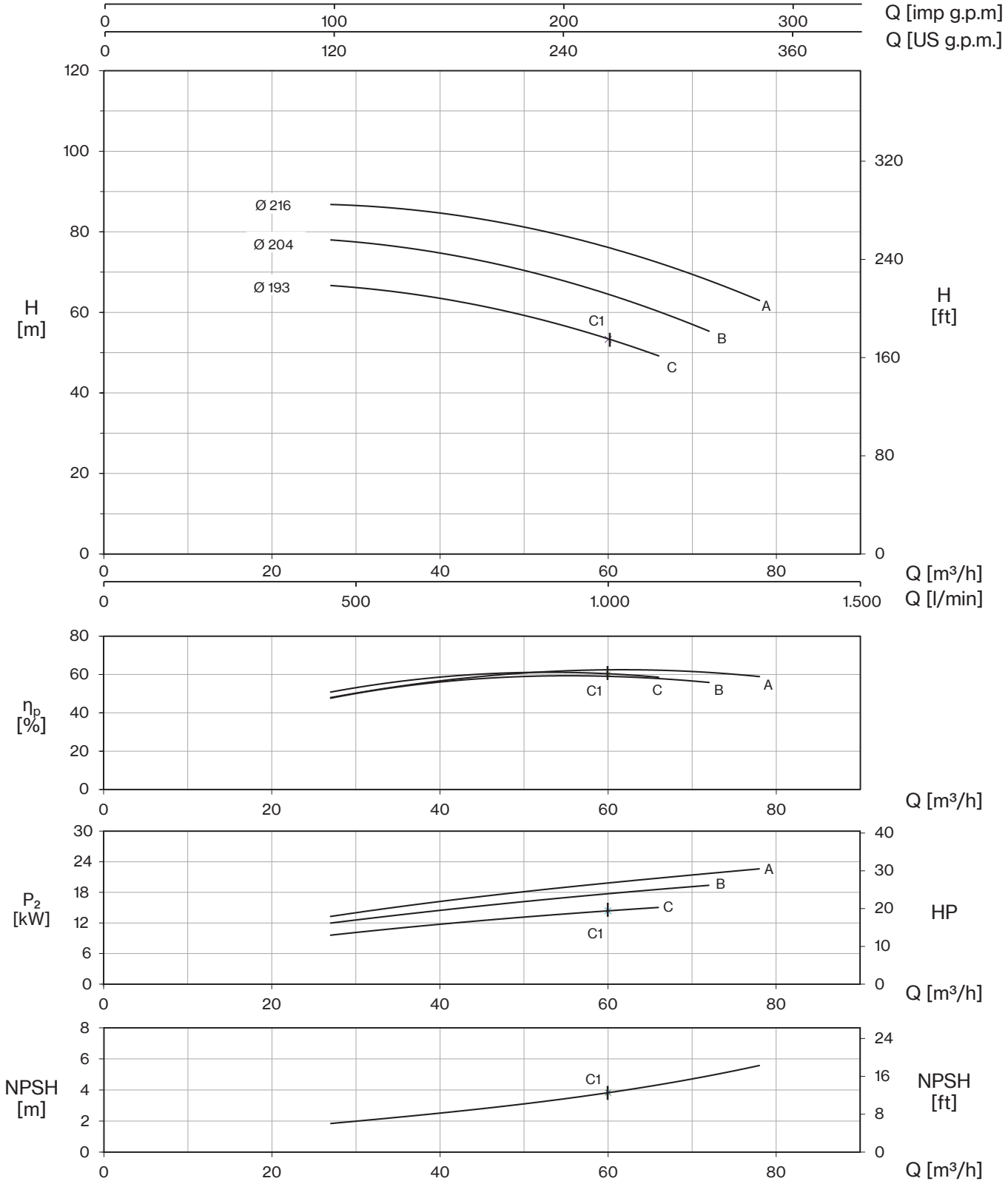
Q [imp g.p.m]
Q [US g.p.m.]
H [m]
H [ft]
Ø 216
Ø 204
Ø 193
A
B
C
C1
Q [m³/h]
Q [l/min]
ηp [%]
P2 [kW]
HP
NPSH [m]
NPSH [ft]

50-315

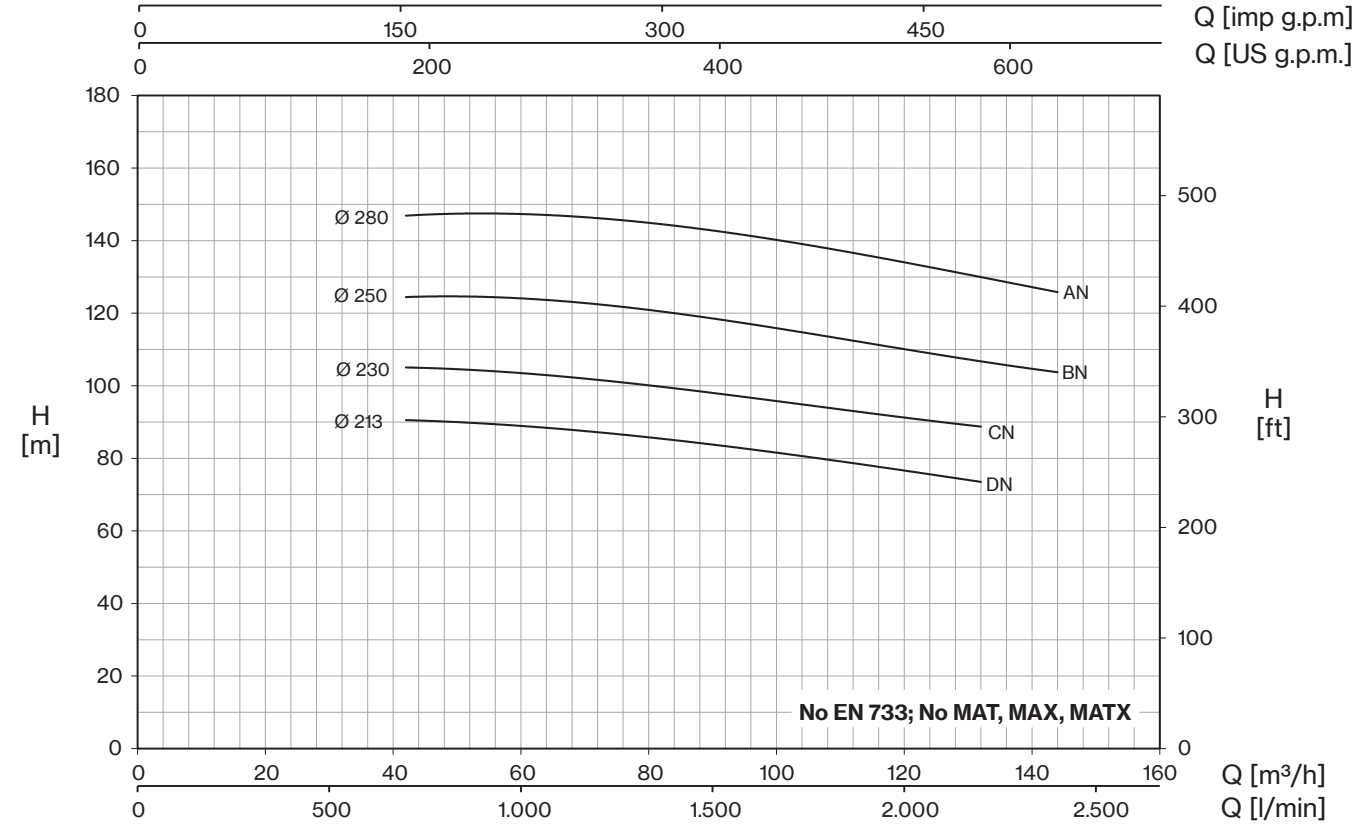

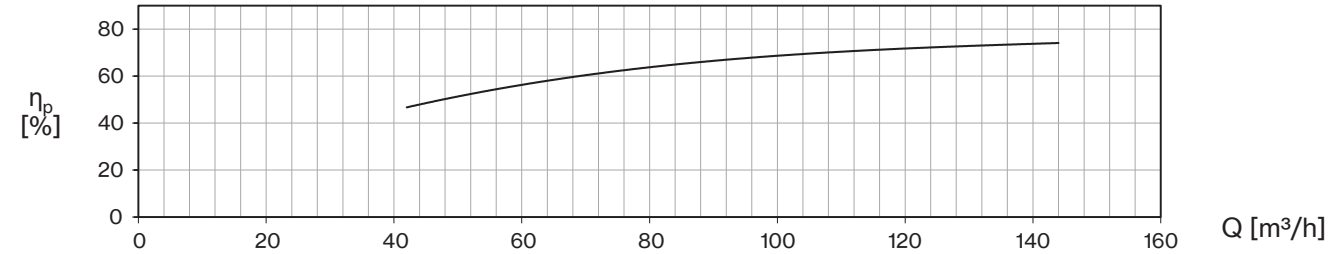

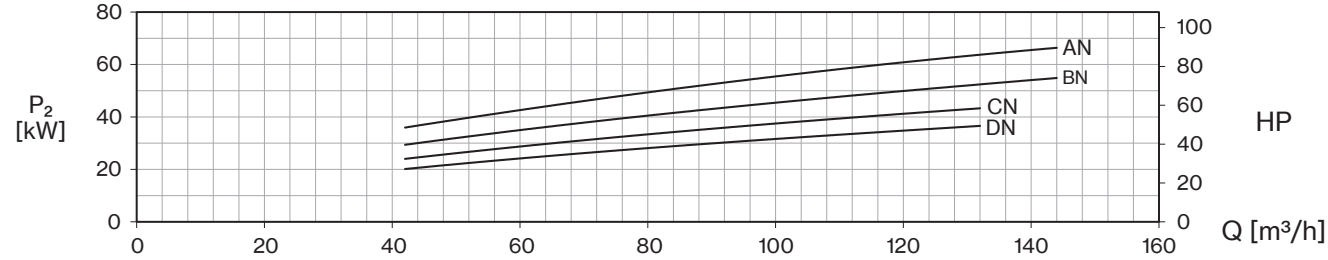

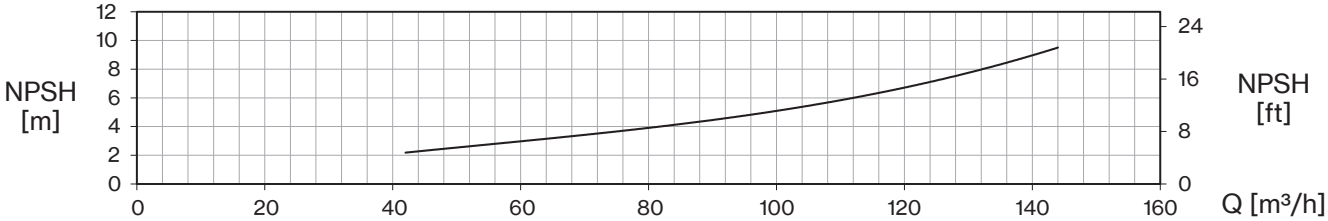

Tolerance: ISO 9906:2012 - Grade 3B
Check pumps availability on pages 92-93-94

65-125

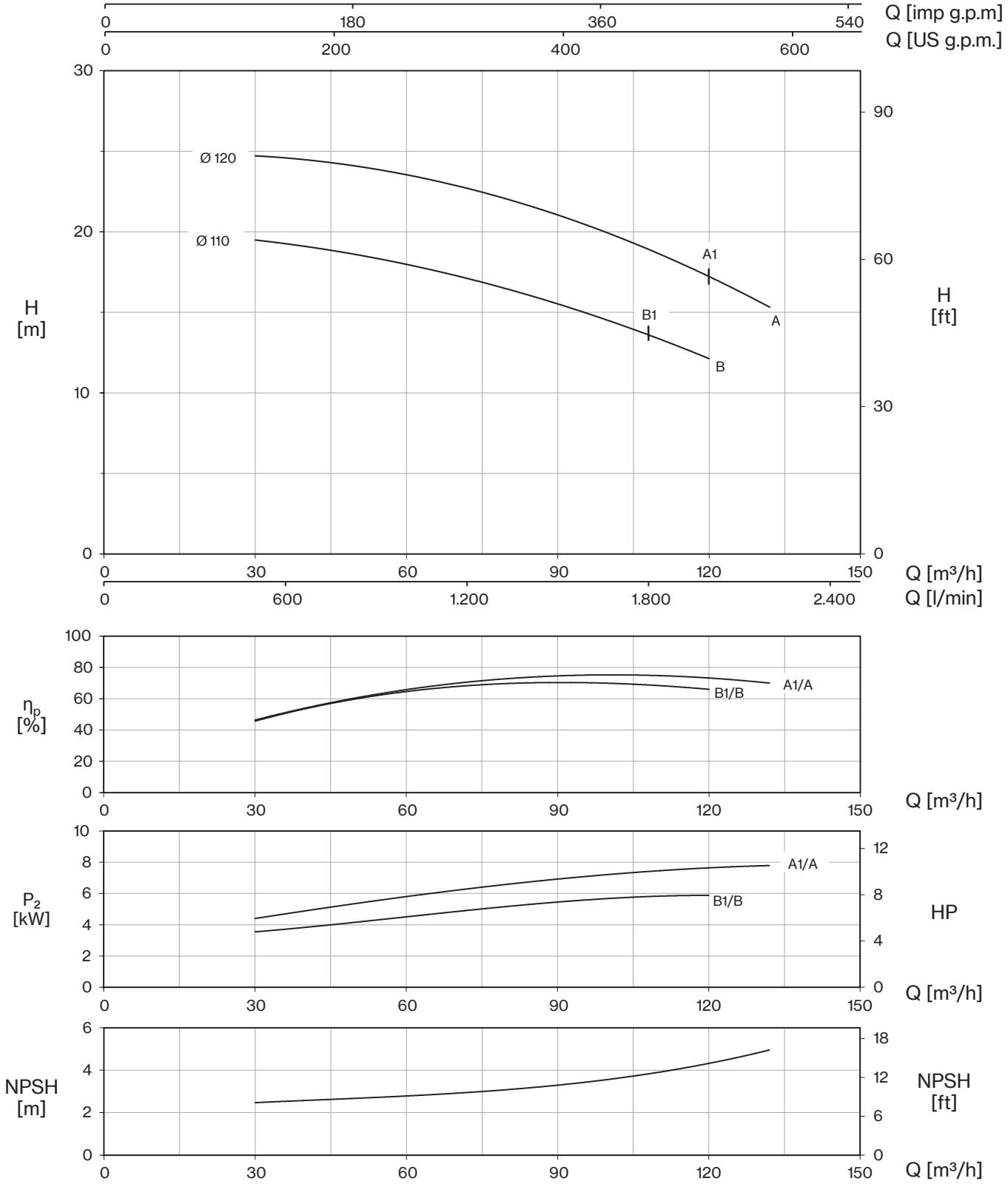
Q [imp g.p.m]
0
180
360
540
Q [US g.p.m.]
0
200
400
600
H
[m]
30
20
10
0
H
[ft]
90
60
30
0
Ø 120
Ø 110
A1
A
B1
B
0
30
60
90
120
150
Q [m³/h]
0
600
1.200
1.800
2.400
Q [l/min]
ηp
[%]
100
80
60
40
20
0
A1/A
B1/B
Q [m³/h]
P2
[kW]
10
8
6
4
2
0
12
8
4
0
HP
A1/A
B1/B
Q [m³/h]
NPSH
[m]
6
4
2
0
18
12
6
0
NPSH
[ft]
Q [m³/h]

65-160

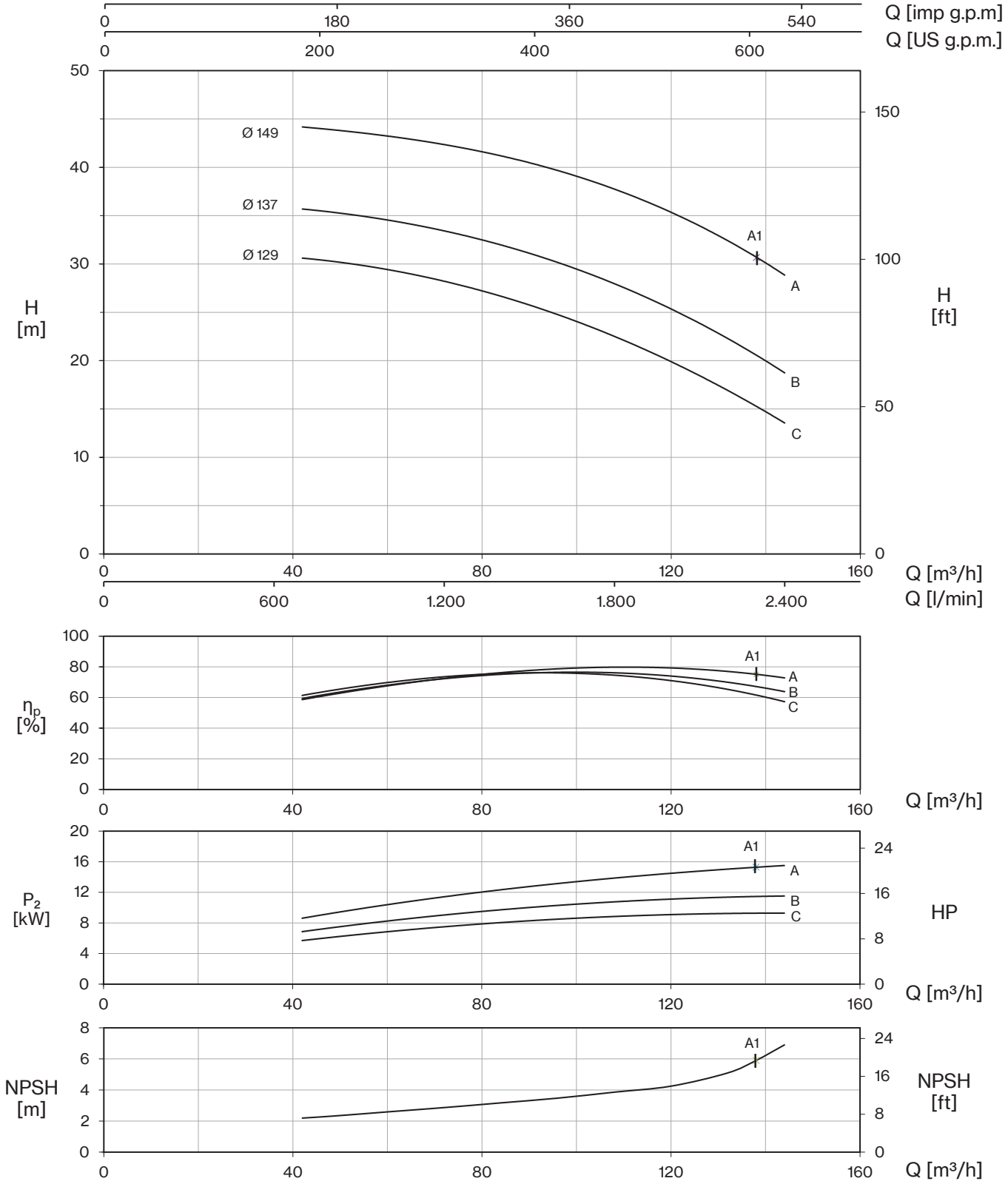

Tolerance: ISO 9906:2012 - Grade 3B
Check pumps availability on pages 92-93-94

65-200

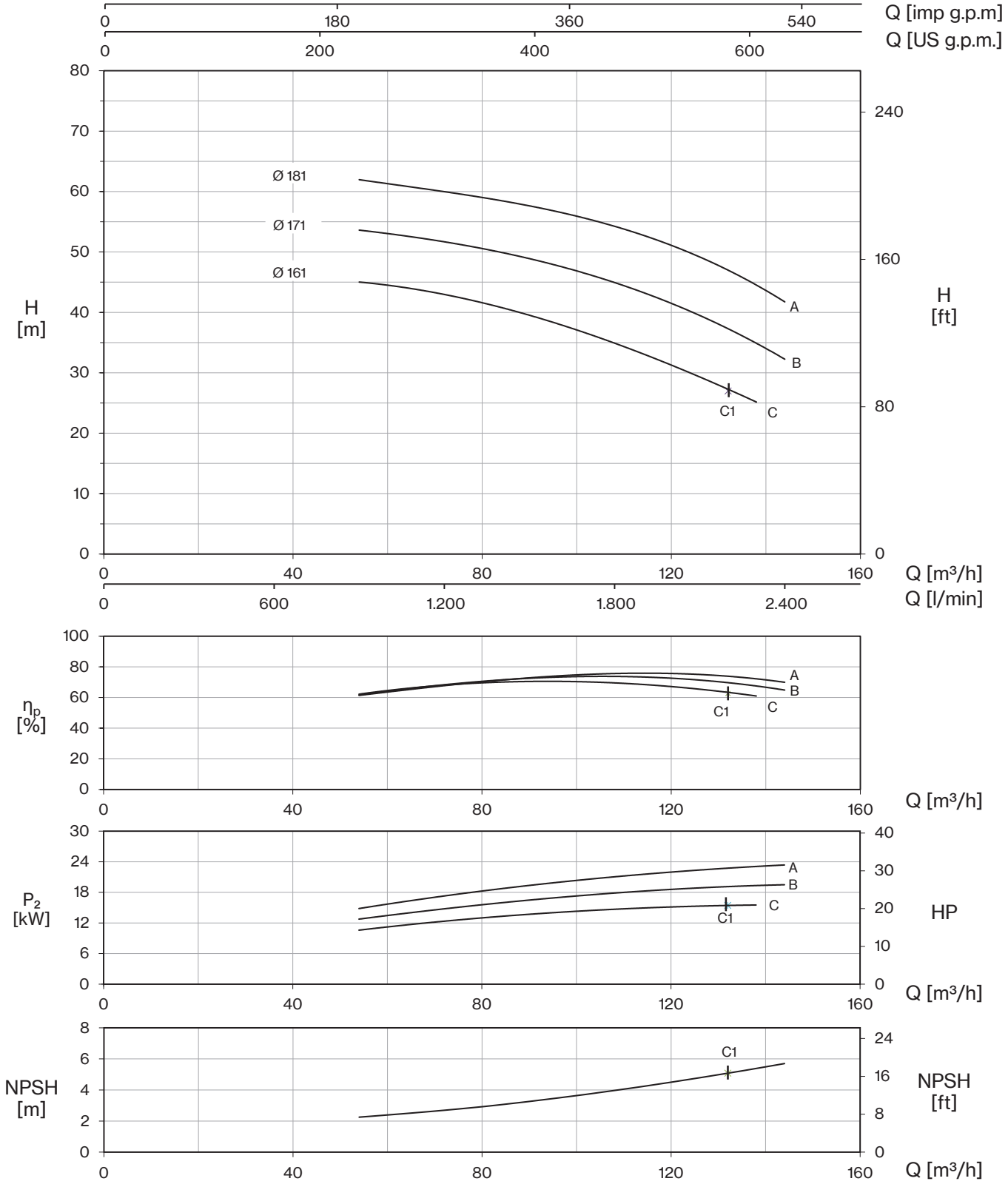
Q [imp g.p.m]
Q [US g.p.m.]
H [m]
H [ft]
Ø 181
Ø 171
Ø 161
A
B
C
C1
Q [m³/h]
Q [l/min]
ηp [%]
P2 [kW]
HP
NPSH [m]
NPSH [ft]

65-250

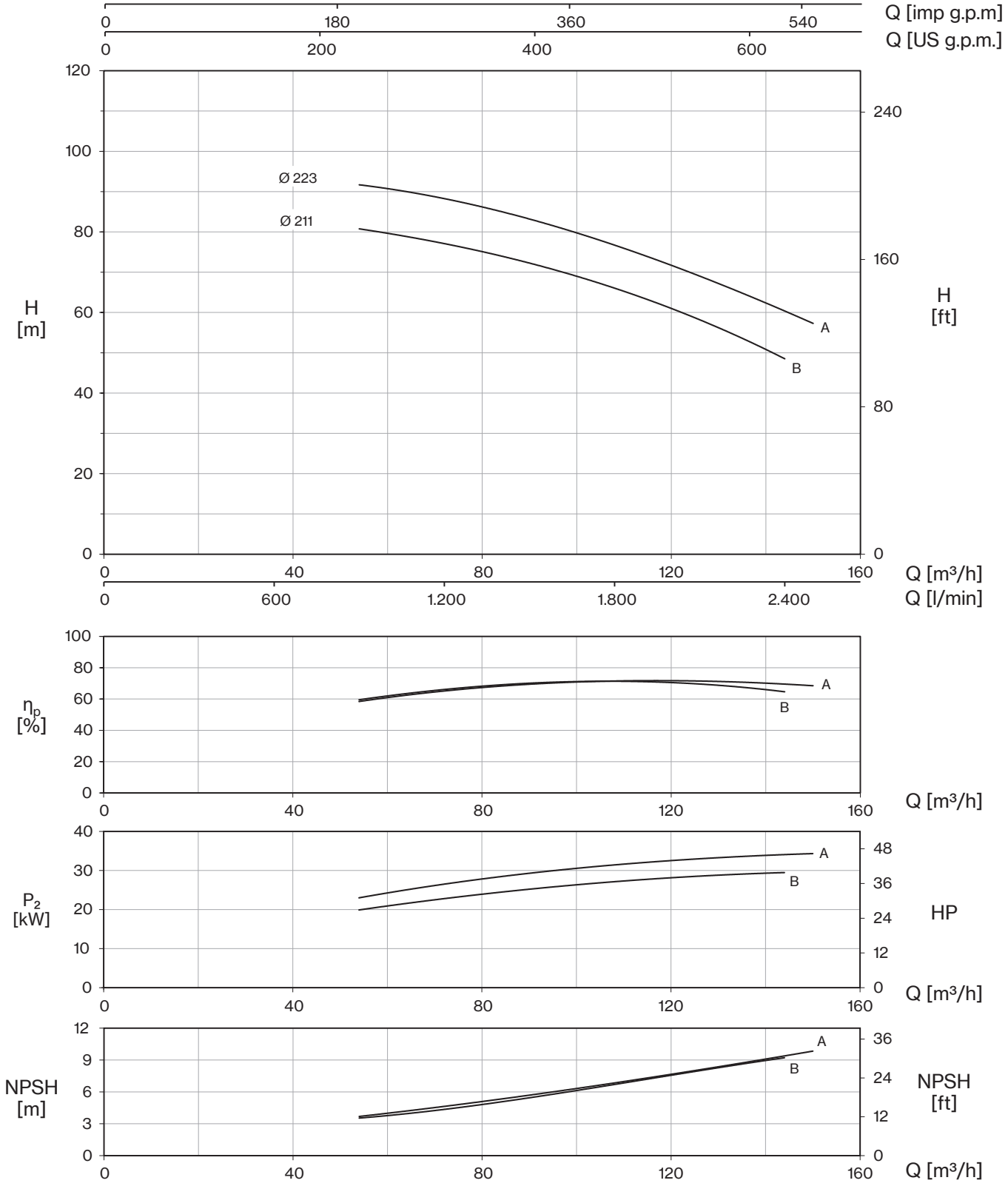

Tolerance: ISO 9906:2012 - Grade 3B
Check pumps availability on pages 92-93-94

65-315

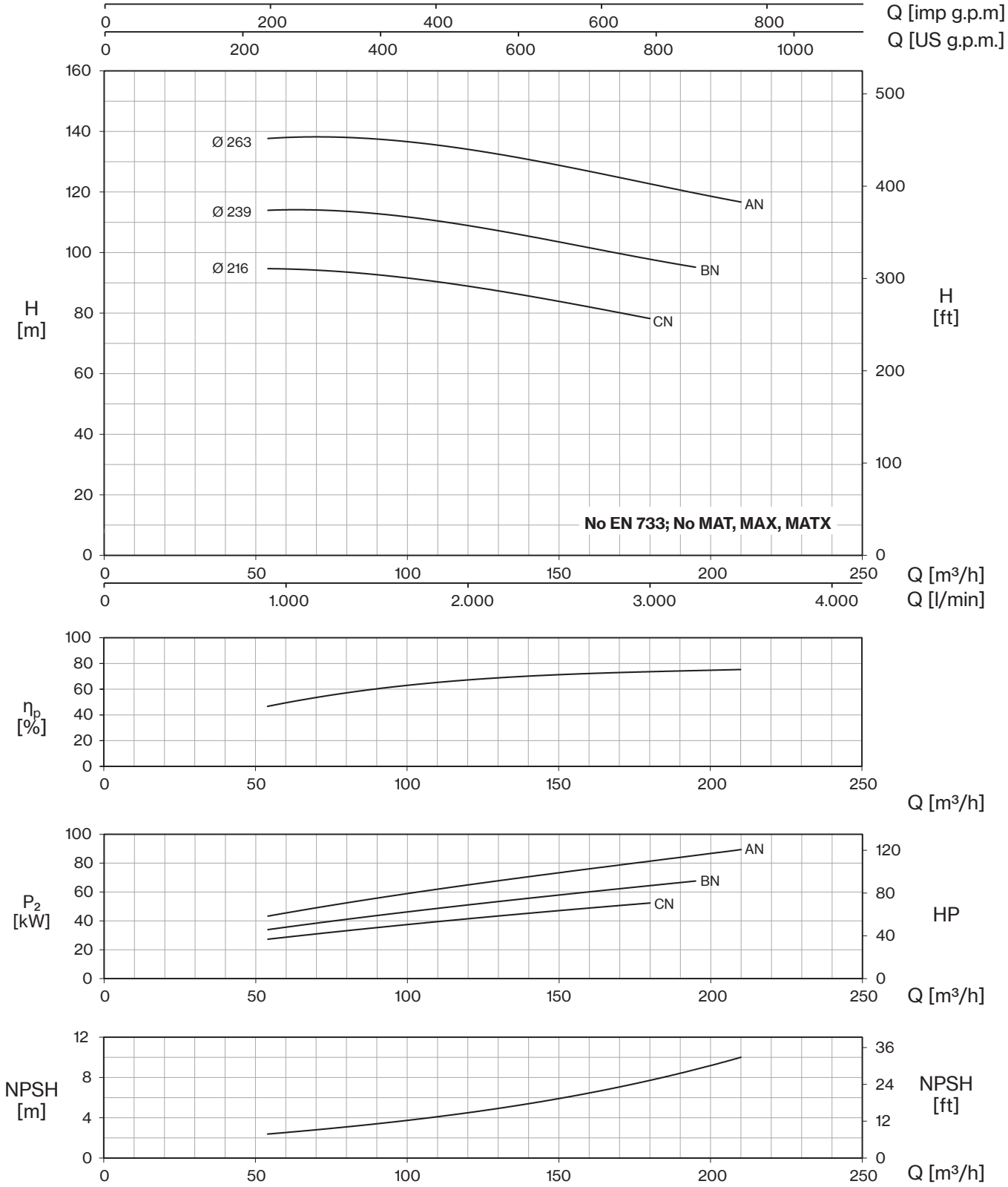
Q [imp g.p.m]
Q [US g.p.m.]
H [m]
H [ft]
Ø 263
Ø 239
Ø 216
AN
BN
CN
No EN 733; No MAT, MAX, MATX
Q [m³/h]
Q [l/min]
ηp [%]
P2 [kW]
HP
NPSH [m]
NPSH [ft]

80-160

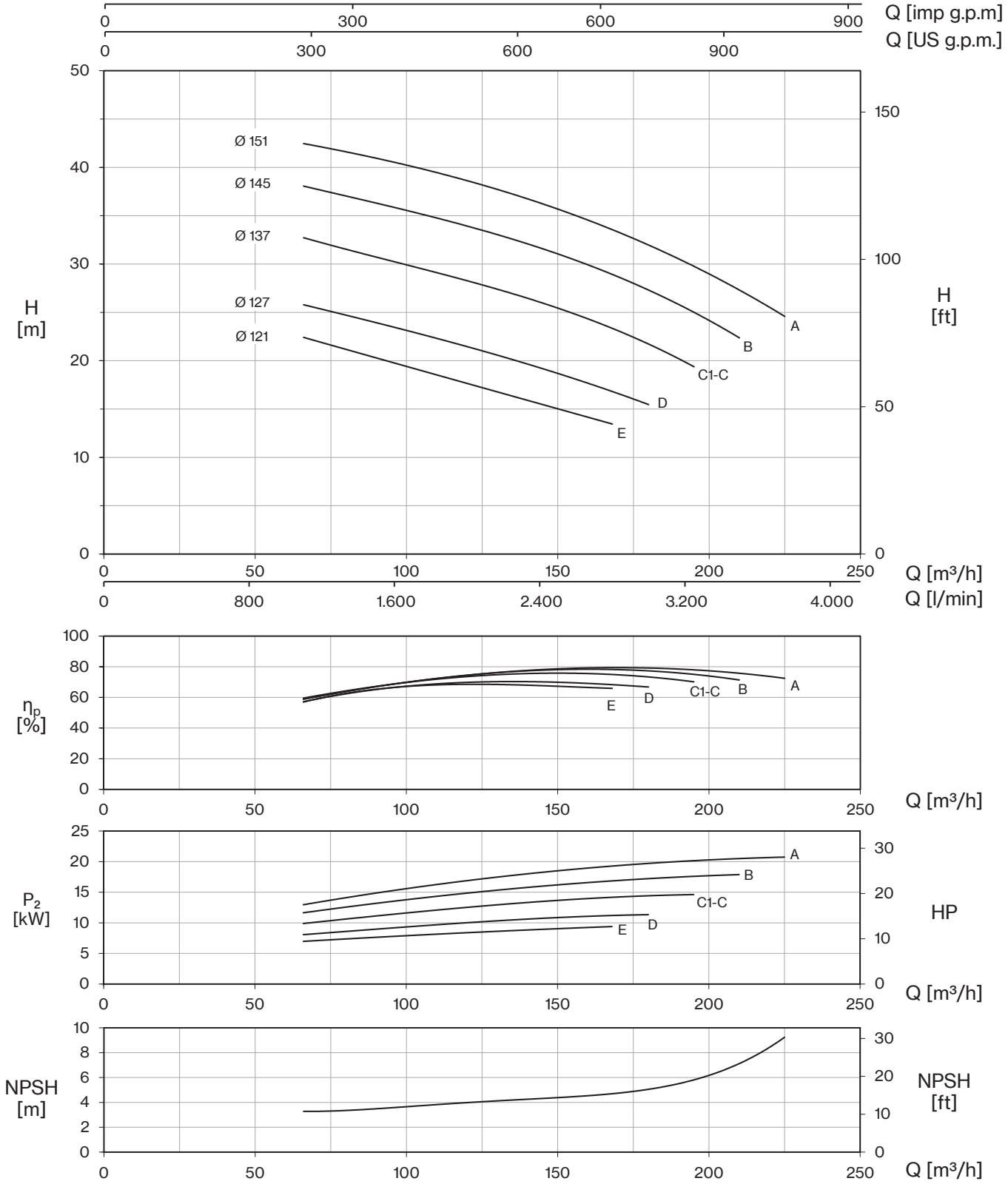

Tolerance: ISO 9906:2012 - Grade 3B
Check pumps availability on pages 92-93-94

80-200

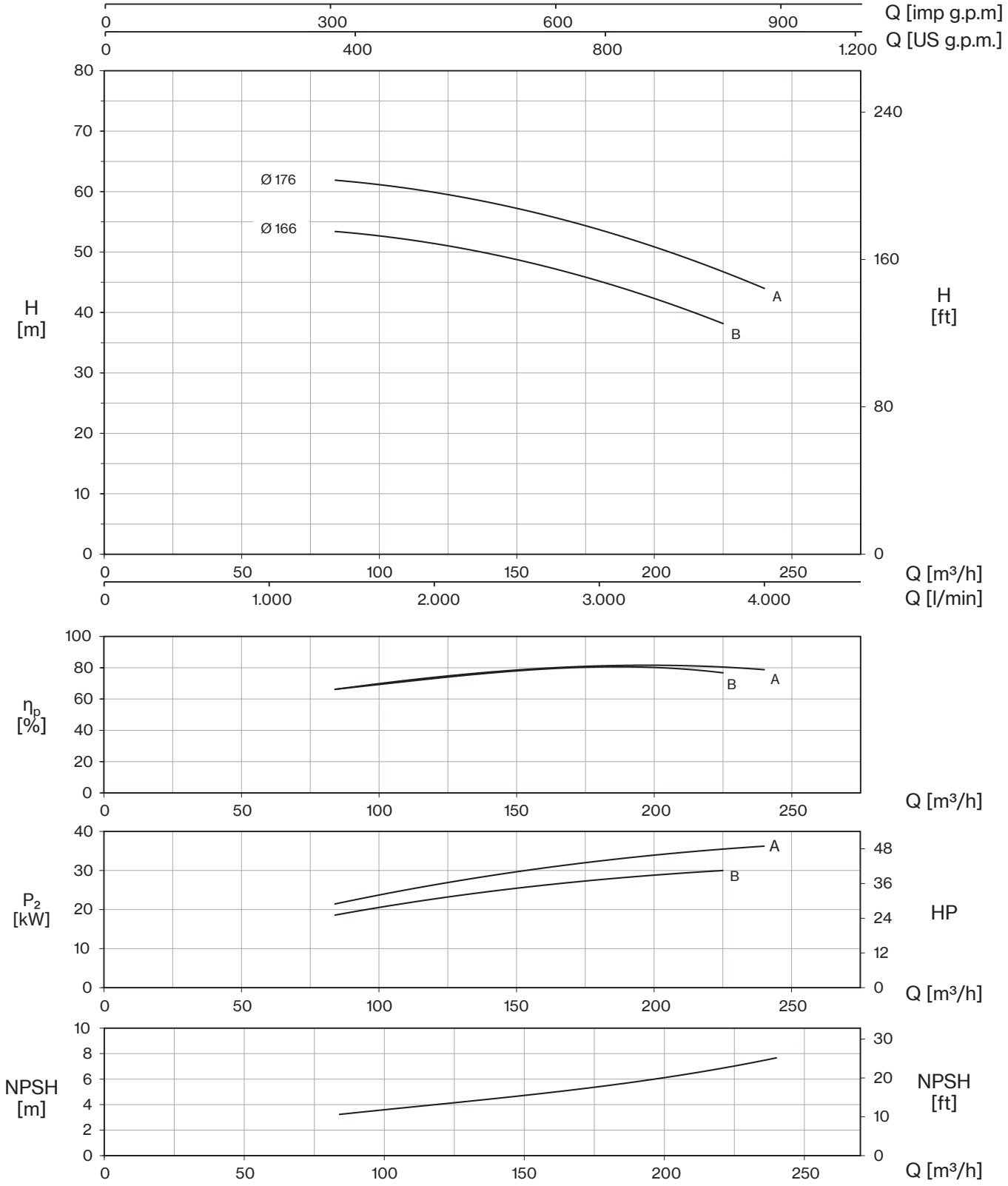
Q [imp g.p.m]
0
300
600
900
Q [US g.p.m.]
0
400
800
1.200
H [m]
80
70
60
50
40
30
20
10
0
H [ft]
240
160
80
0
Ø 176
Ø 166
A
B
Q [m³/h]
0
50
100
150
200
250
Q [l/min]
0
1.000
2.000
3.000
4.000
ηp [%]
100
80
60
40
20
0
P2 [kW]
40
30
20
10
0
HP
48
36
24
12
0
NPSH [m]
10
8
6
4
2
0
NPSH [ft]
30
20
10
0

80-250

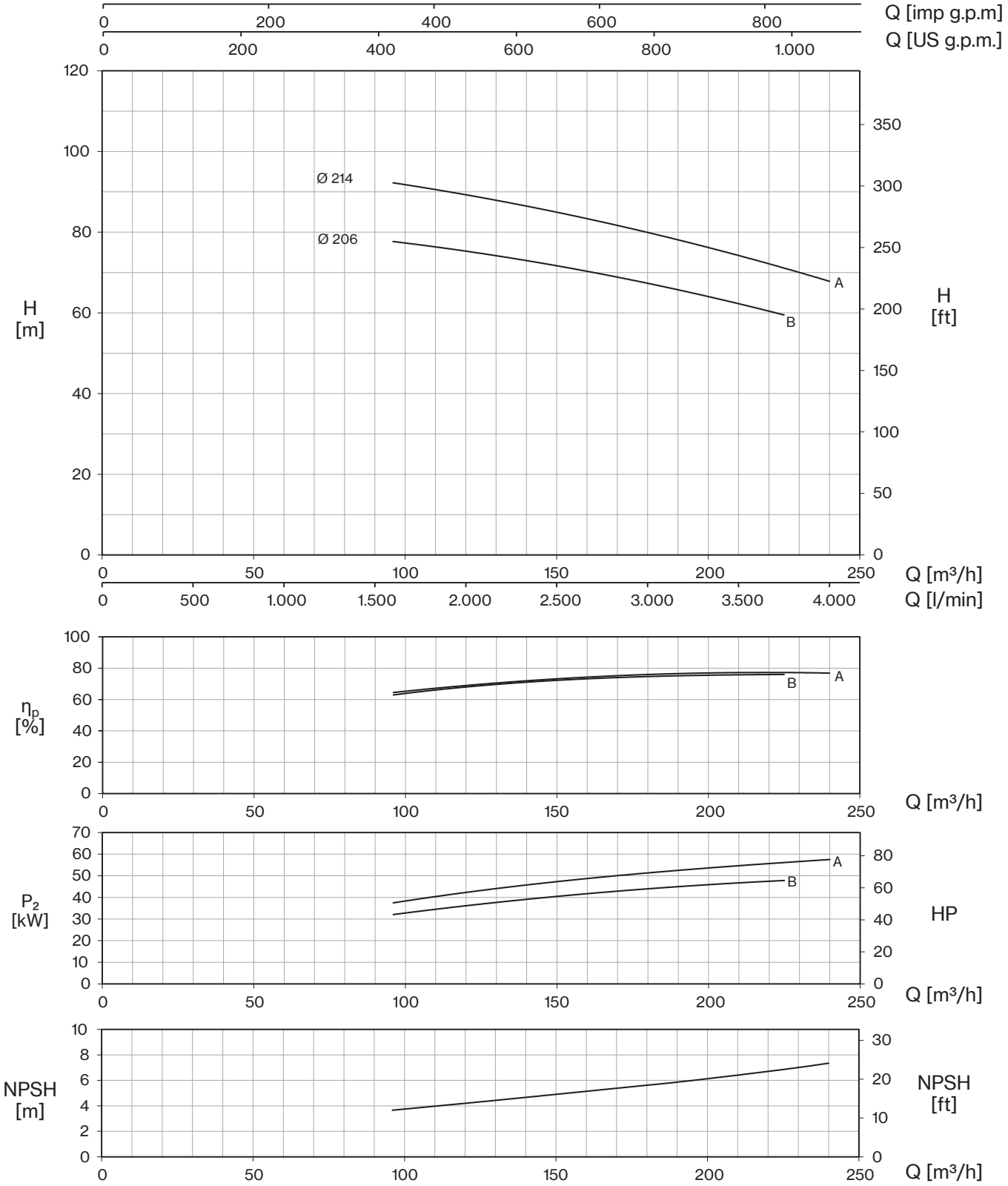

Tolerance: ISO 9906:2012 - Grade 3B
Check pumps availability on pages 92-93-94

100-160

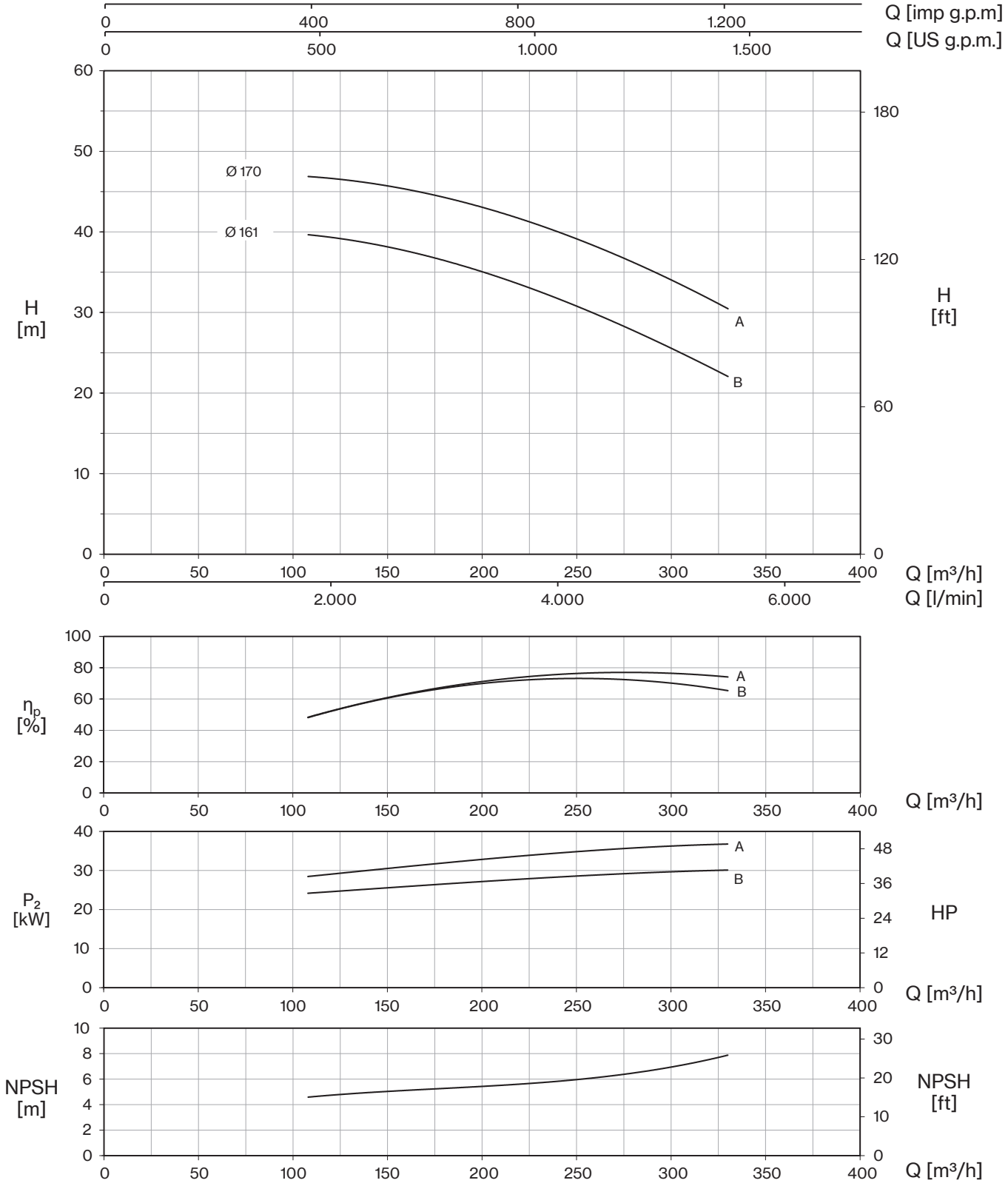
Q [imp g.p.m]
0
400
800
1.200
Q [US g.p.m.]
0
500
1.000
1.500
H [m]
H [ft]
Ø 170
Ø 161
A
B
Q [m³/h]
Q [l/min]
0
2.000
4.000
6.000
ηp [%]
P2 [kW]
HP
NPSH [m]
NPSH [ft]

100-200

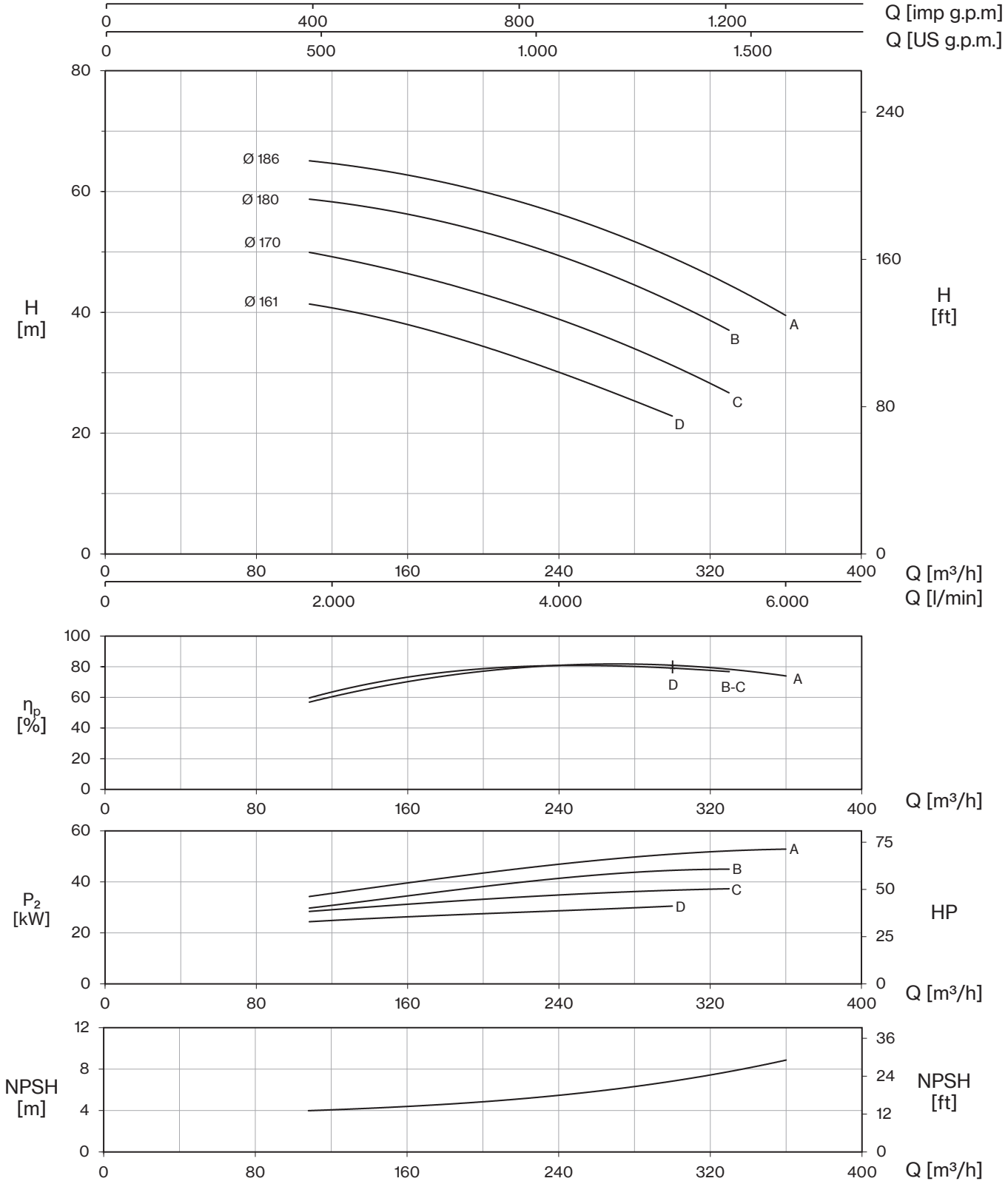

Tolerance: ISO 9906:2012 - Grade 3B
Check pumps availability on pages 92-93-94

100-250

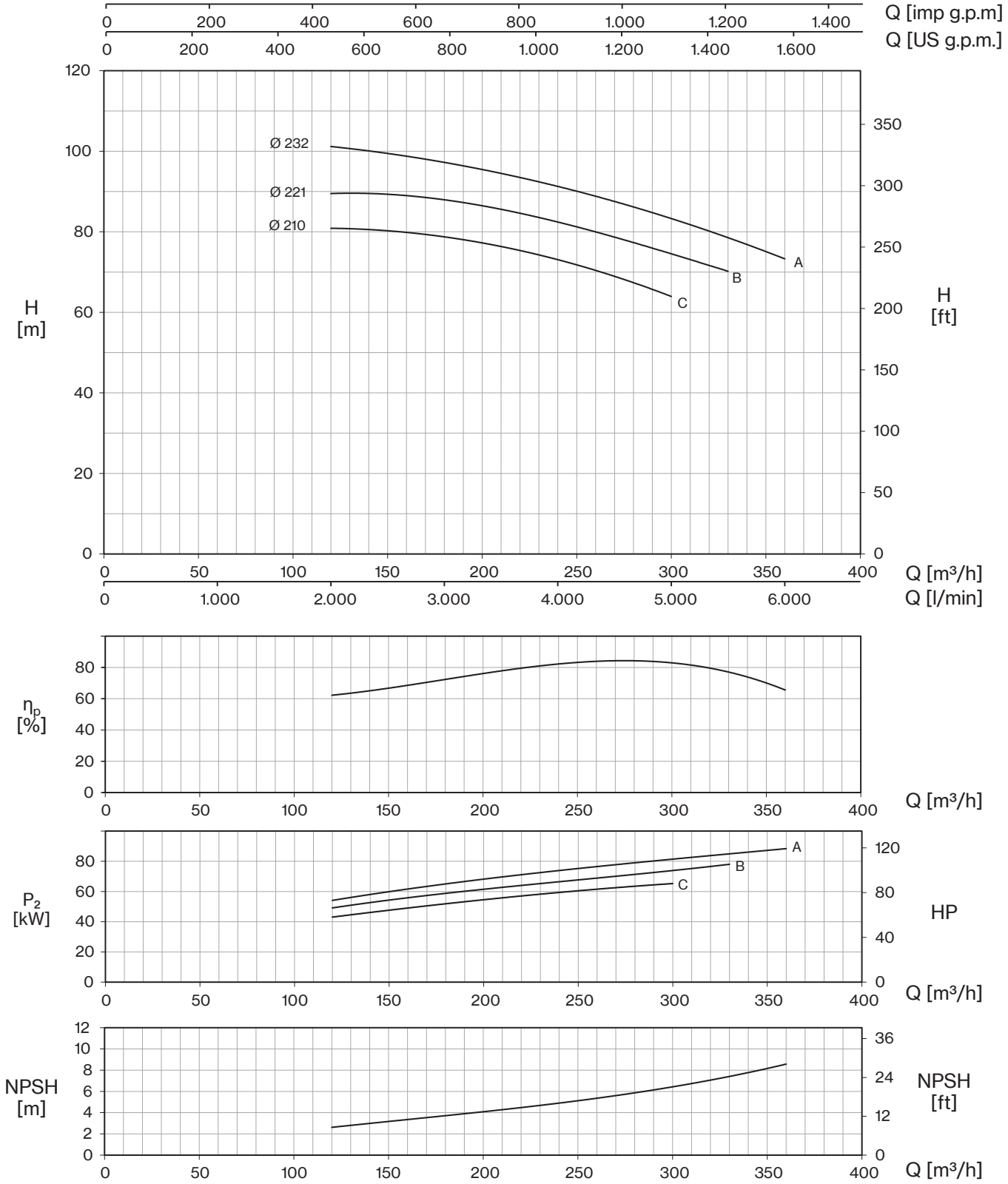
Q [imp g.p.m]
Q [US g.p.m.]
H [m]
H [ft]
Ø 232
Ø 221
Ø 210
A
B
C
Q [m³/h]
Q [l/min]
ηp [%]
P2 [kW]
HP
NPSH [m]
NPSH [ft]

32-160

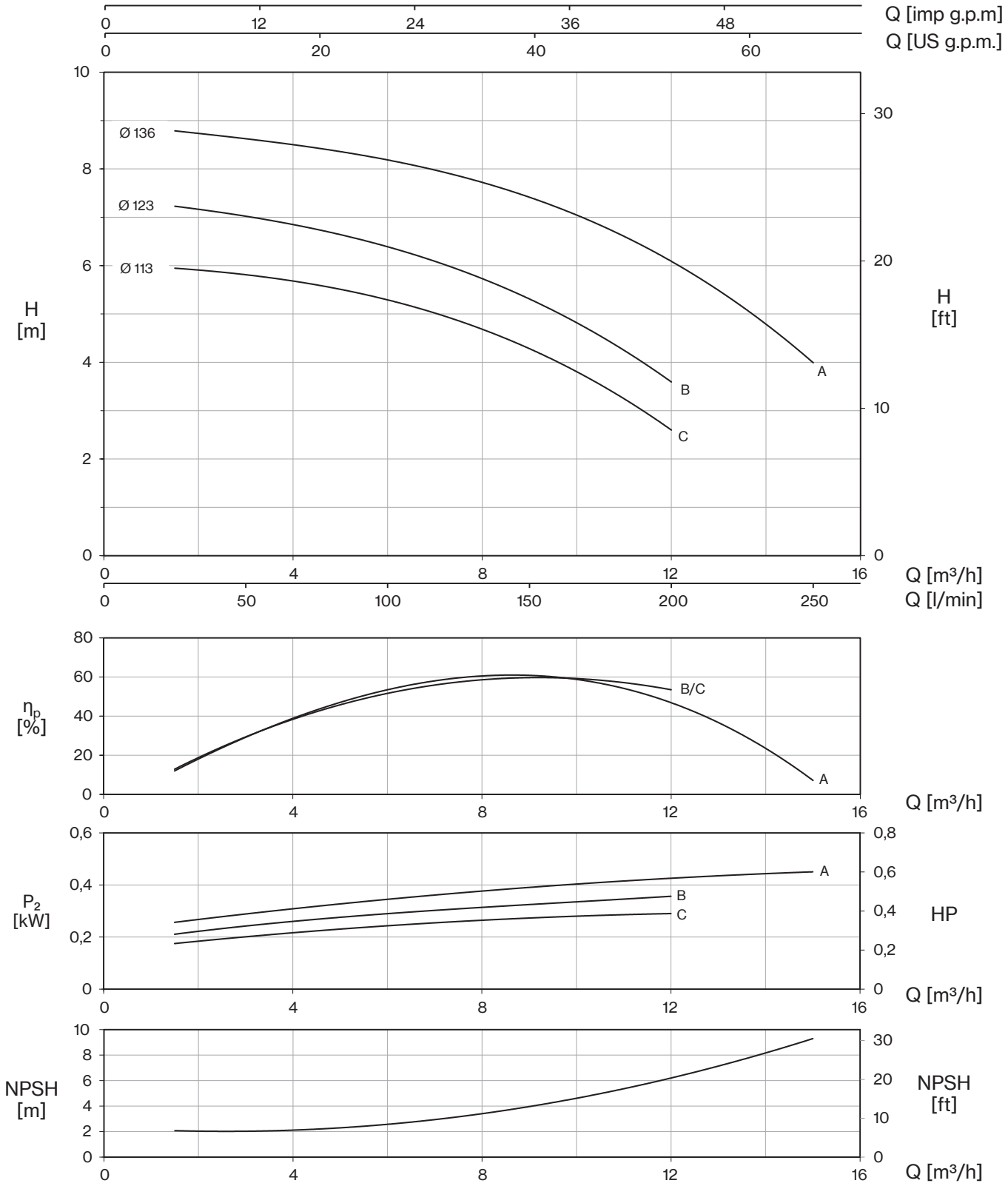

Tolerance: ISO 9906:2012 - Grade 3B
Check pumps availability on pages 92-93-94

32-200

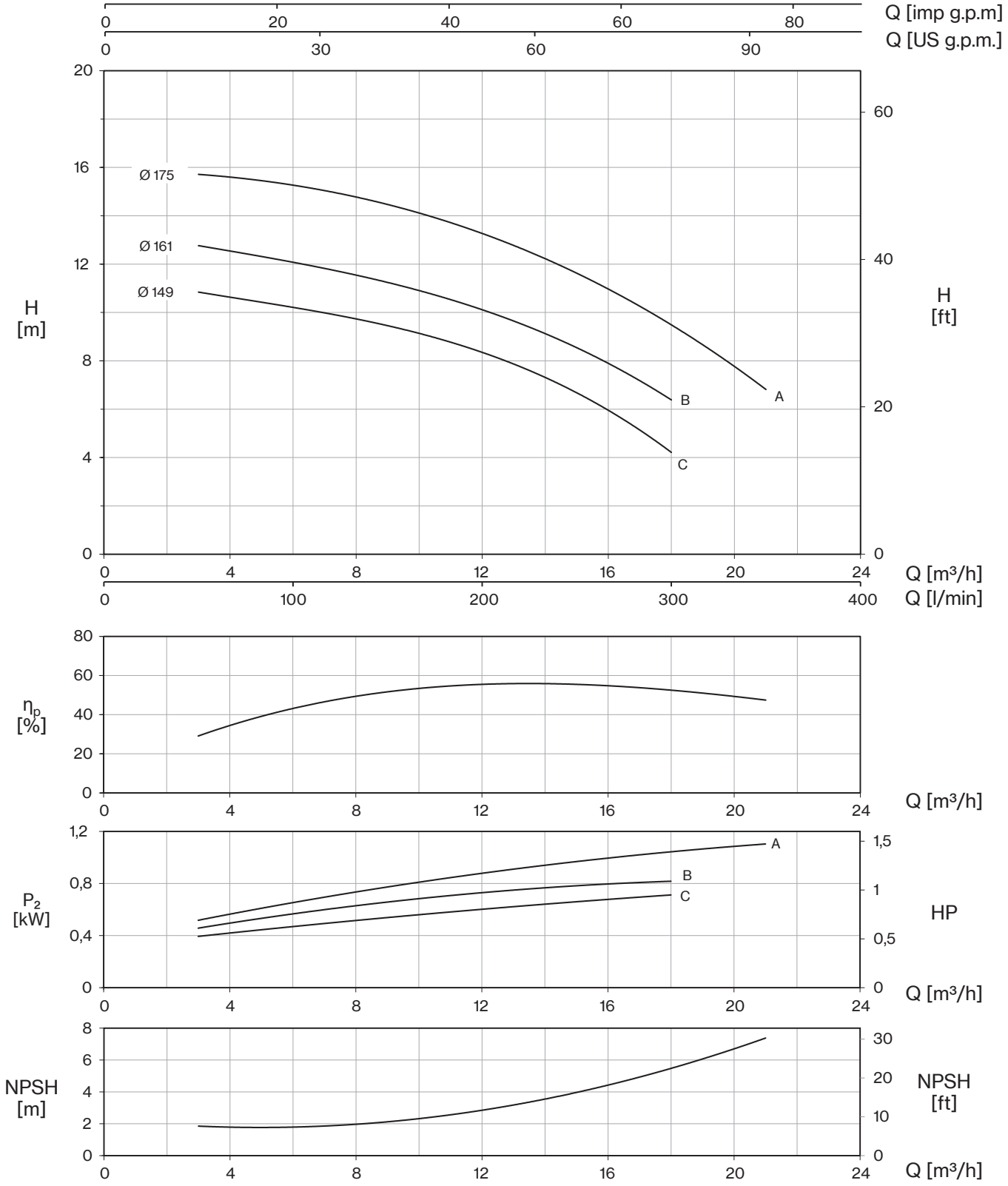
Q [imp g.p.m]
Q [US g.p.m.]
H [m]
H [ft]
Ø 175
Ø 161
Ø 149
A
B
C
Q [m³/h]
Q [l/min]
ηp [%]
P2 [kW]
HP
NPSH [m]
NPSH [ft]

32-250

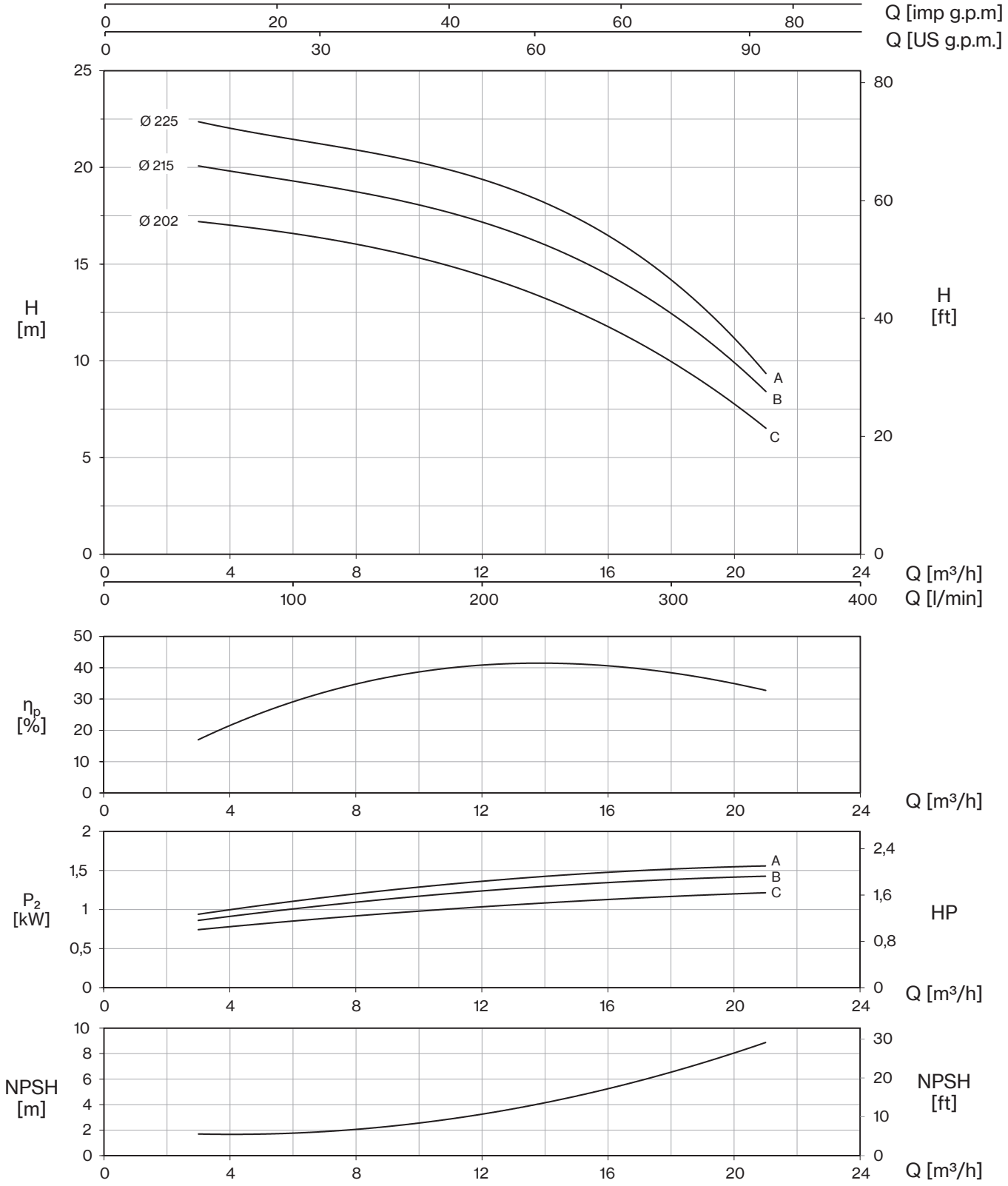

Tolerance: ISO 9906:2012 - Grade 3B
Check pumps availability on pages 92-93-94

40-125

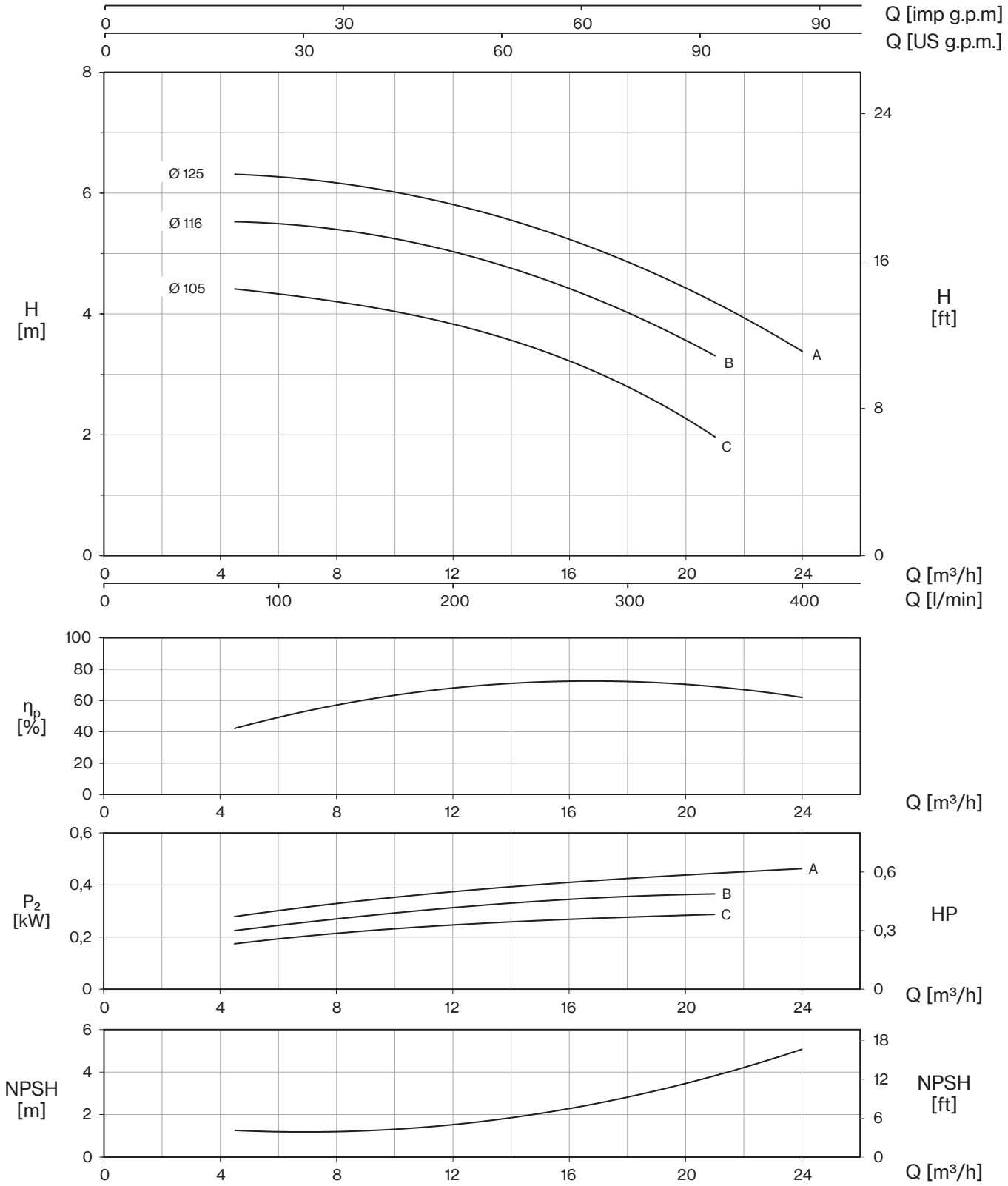
Q [imp g.p.m]
Q [US g.p.m.]
H [m]
H [ft]
Ø 125
Ø 116
Ø 105
A
B
C
Q [m³/h]
Q [l/min]
ηp [%]
P2 [kW]
HP
NPSH [m]
NPSH [ft]

40-160

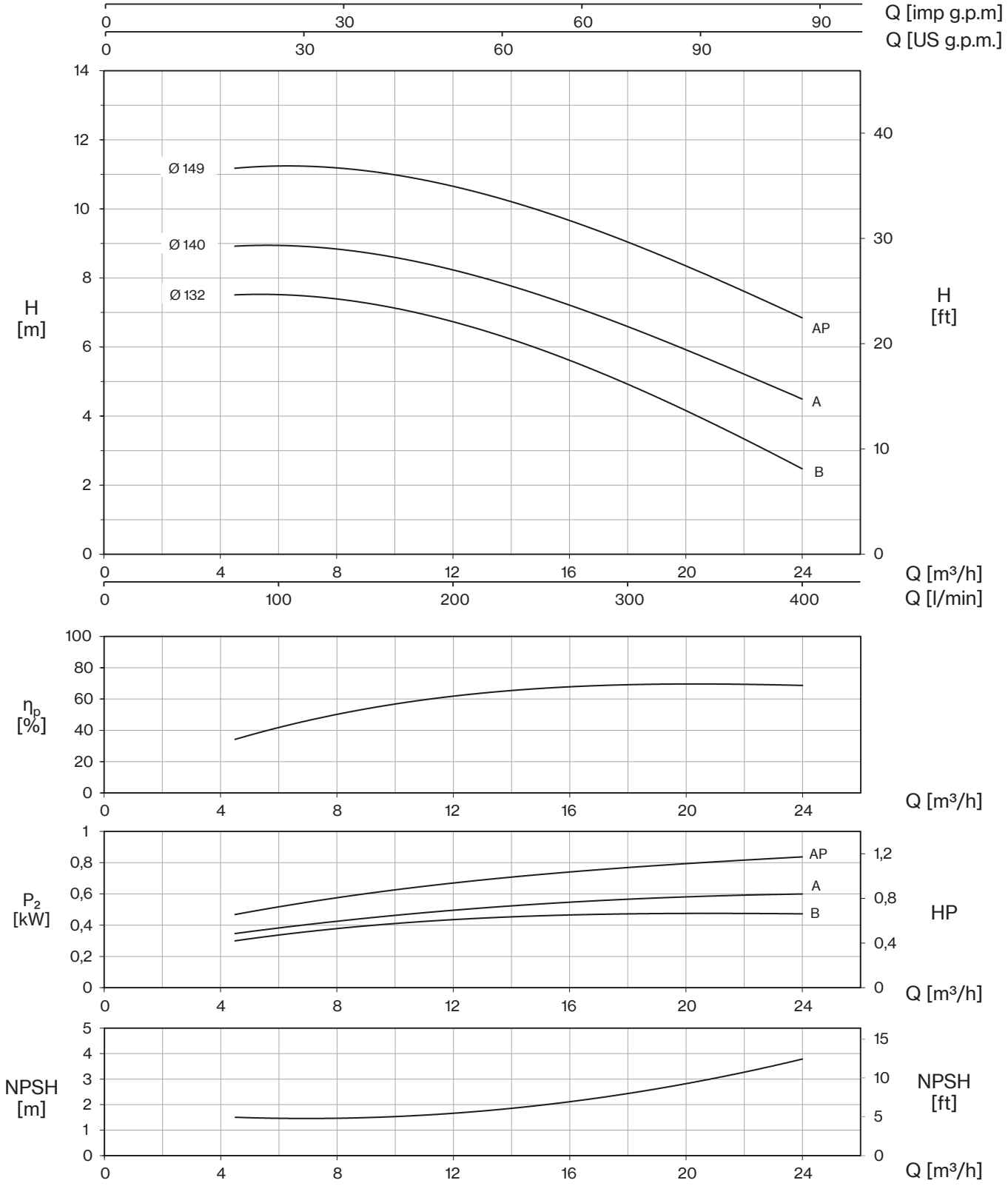

Tolerance: ISO 9906:2012 - Grade 3B
Check pumps availability on pages 92-93-94

40-200

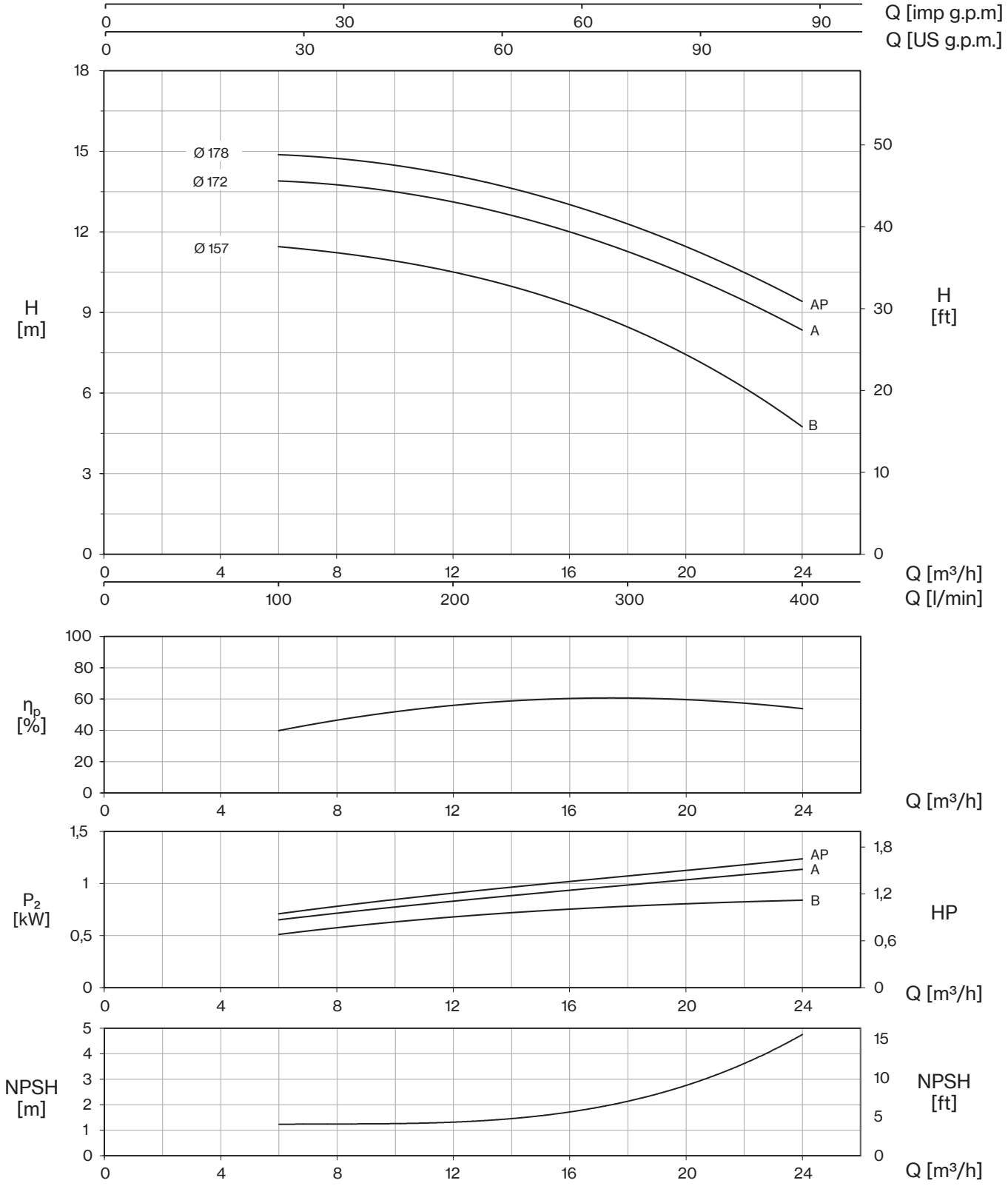
Q [imp g.p.m]
Q [US g.p.m.]
H [m]
H [ft]
Ø 178
Ø 172
Ø 157
AP
A
B
Q [m³/h]
Q [l/min]
ηp [%]
P2 [kW]
HP
NPSH [m]
NPSH [ft]

40-250

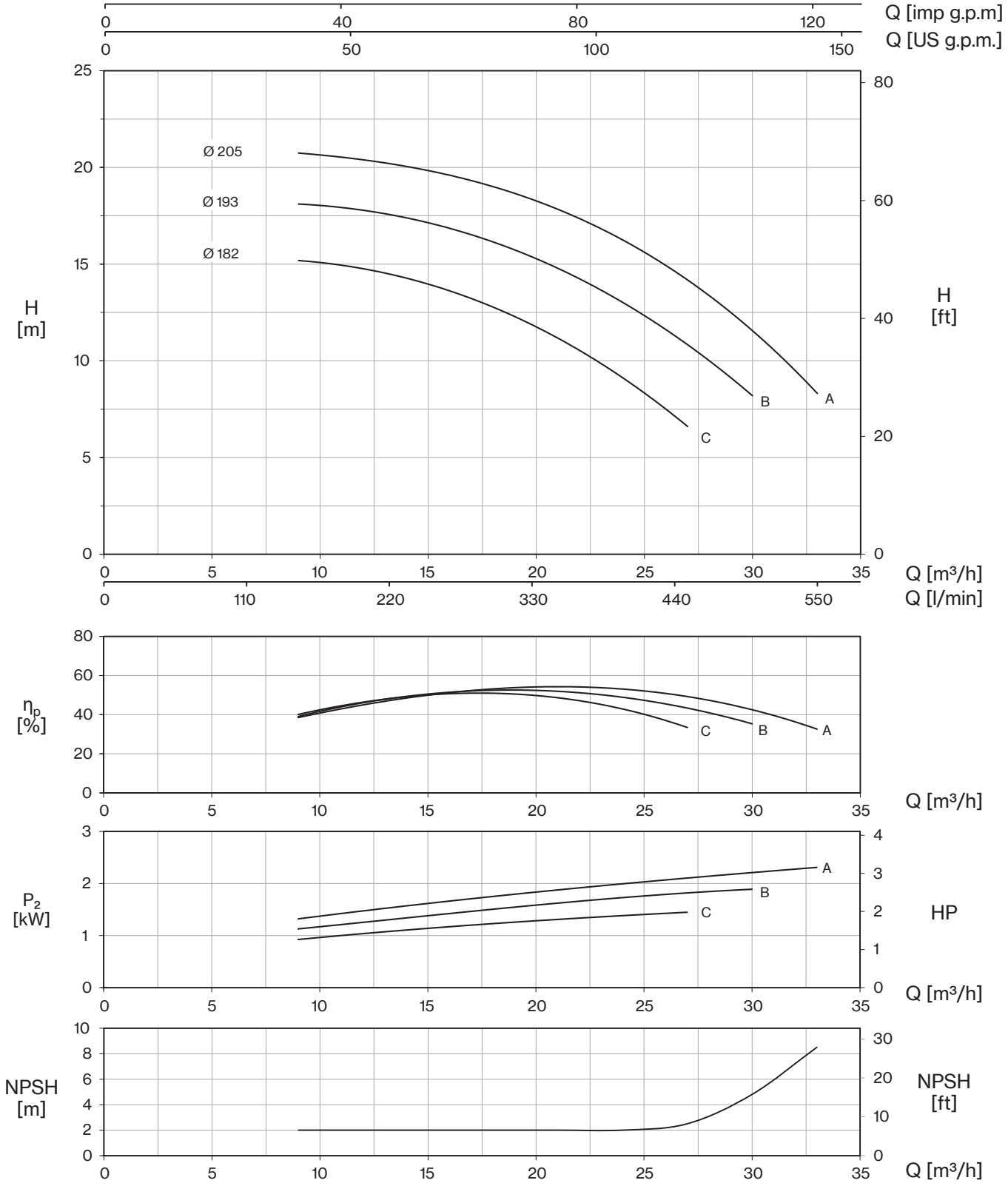

Tolerance: ISO 9906:2012 - Grade 3B
Check pumps availability on pages 92-93-94

50-125

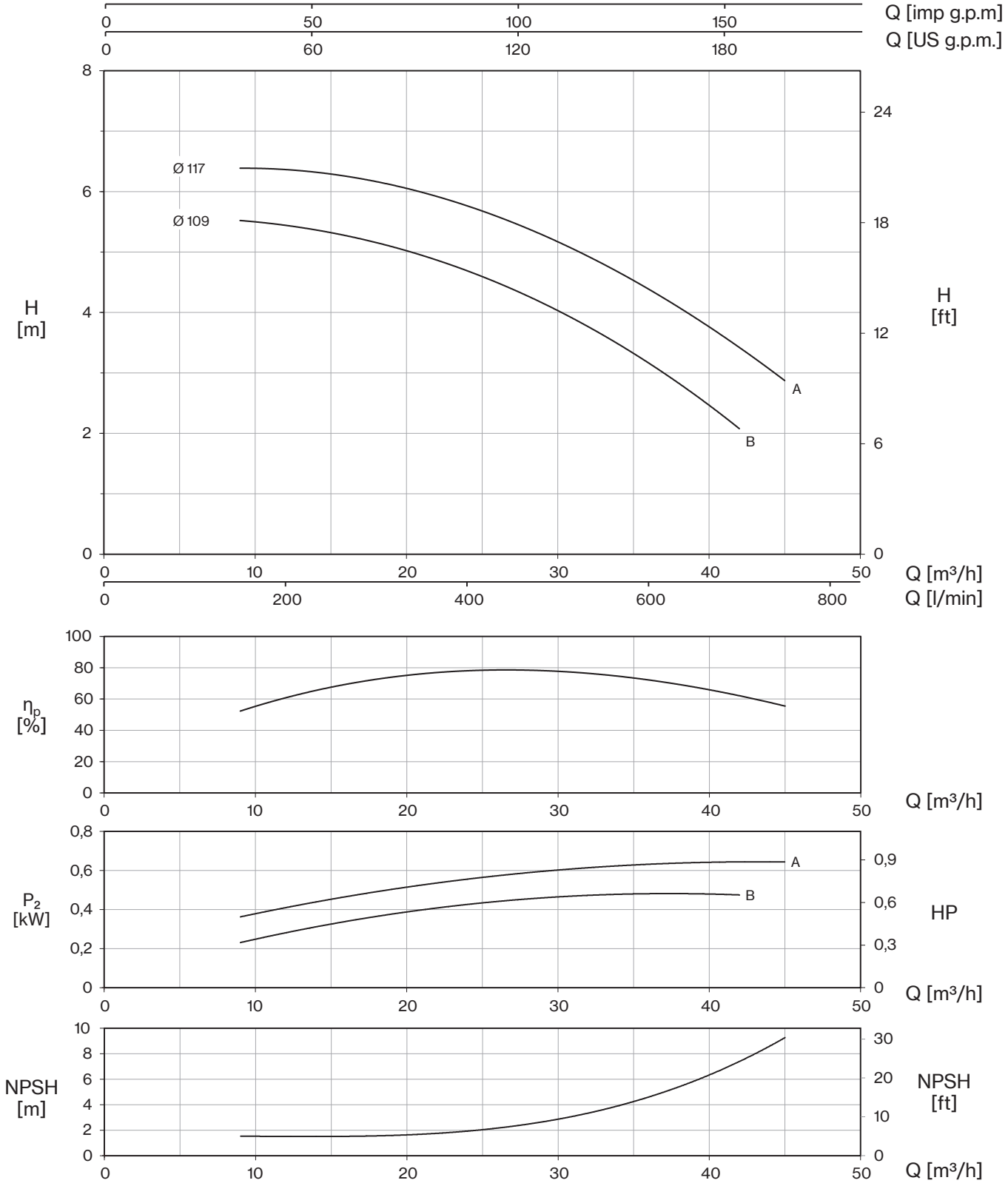
Q [imp g.p.m]
0 50 100 150
Q [US g.p.m.]
0 60 120 180
H [m]
H [ft]
Ø 117
Ø 109
A
B
Q [m³/h]
Q [l/min]
0 10 20 30 40 50
0 200 400 600 800
ηp [%]
P2 [kW]
HP
NPSH [m]
NPSH [ft]

50-160

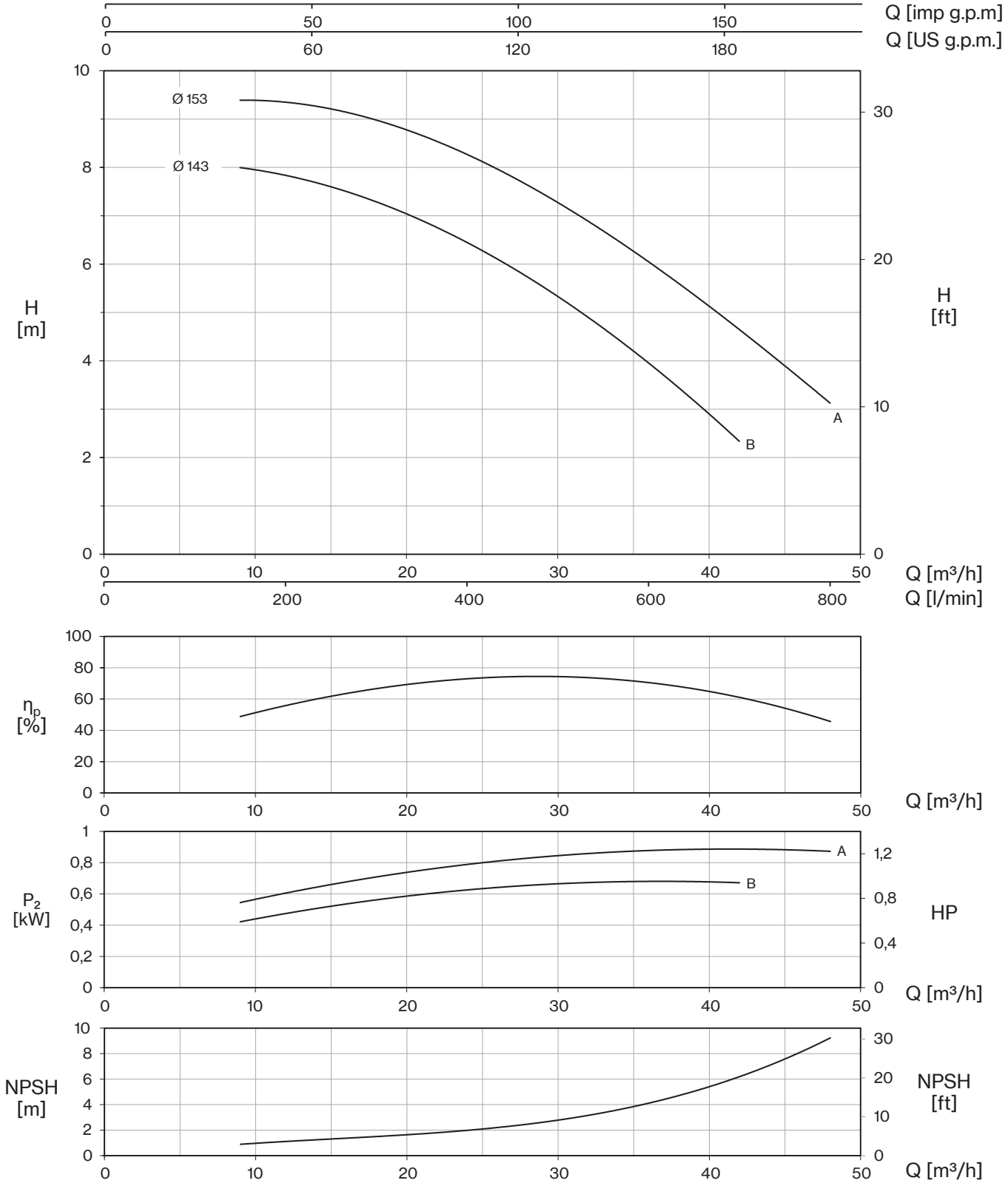

Tolerance: ISO 9906:2012 - Grade 3B
Check pumps availability on pages 92-93-94

50-200

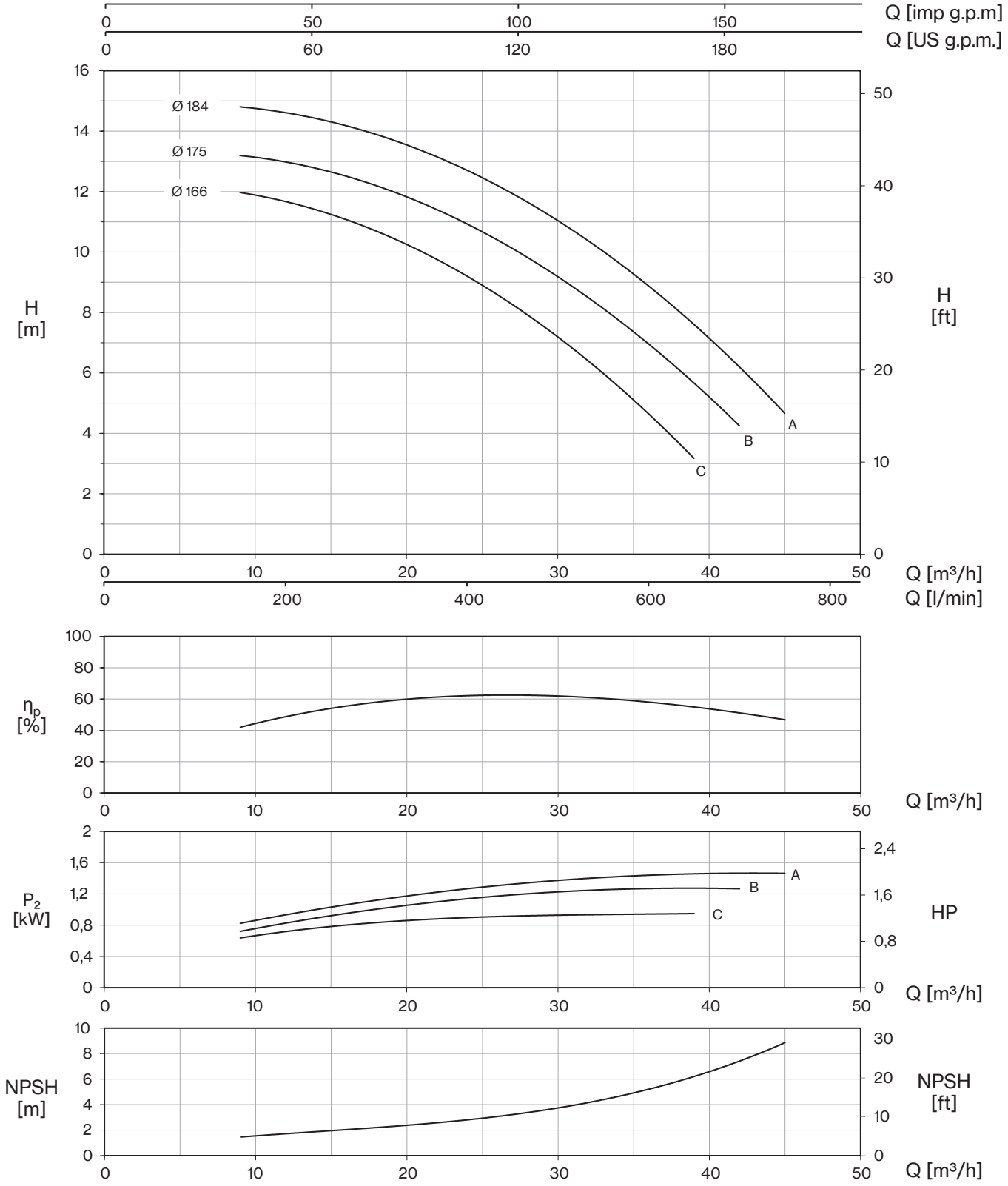
Q [imp g.p.m]
Q [US g.p.m.]
H [m]
H [ft]
Ø 184
Ø 175
Ø 166
A
B
C
Q [m³/h]
Q [l/min]
ηp [%]
P2 [kW]
HP
NPSH [m]
NPSH [ft]

50-250

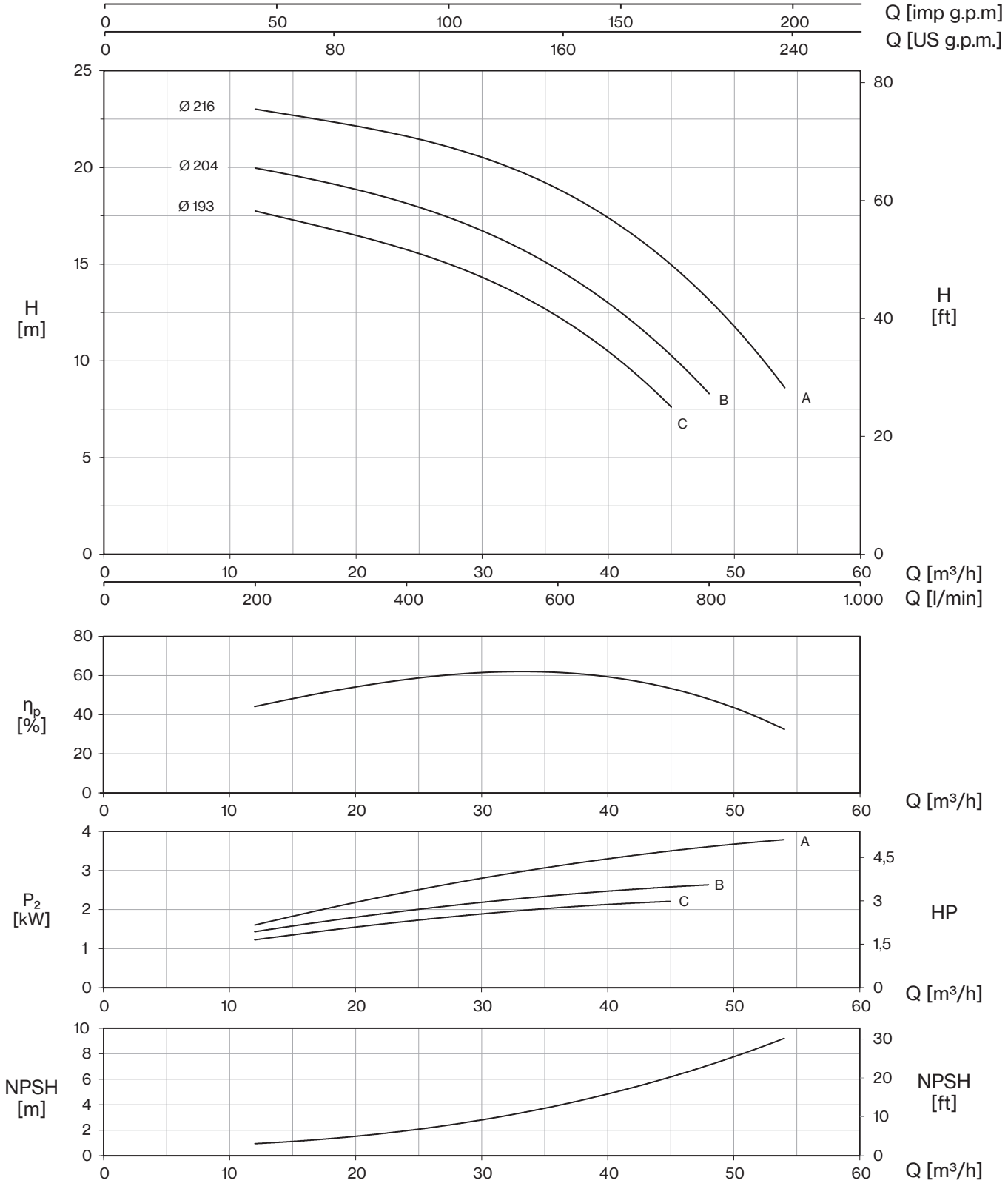

Tolerance: ISO 9906:2012 - Grade 3B
Check pumps availability on pages 92-93-94

50-315

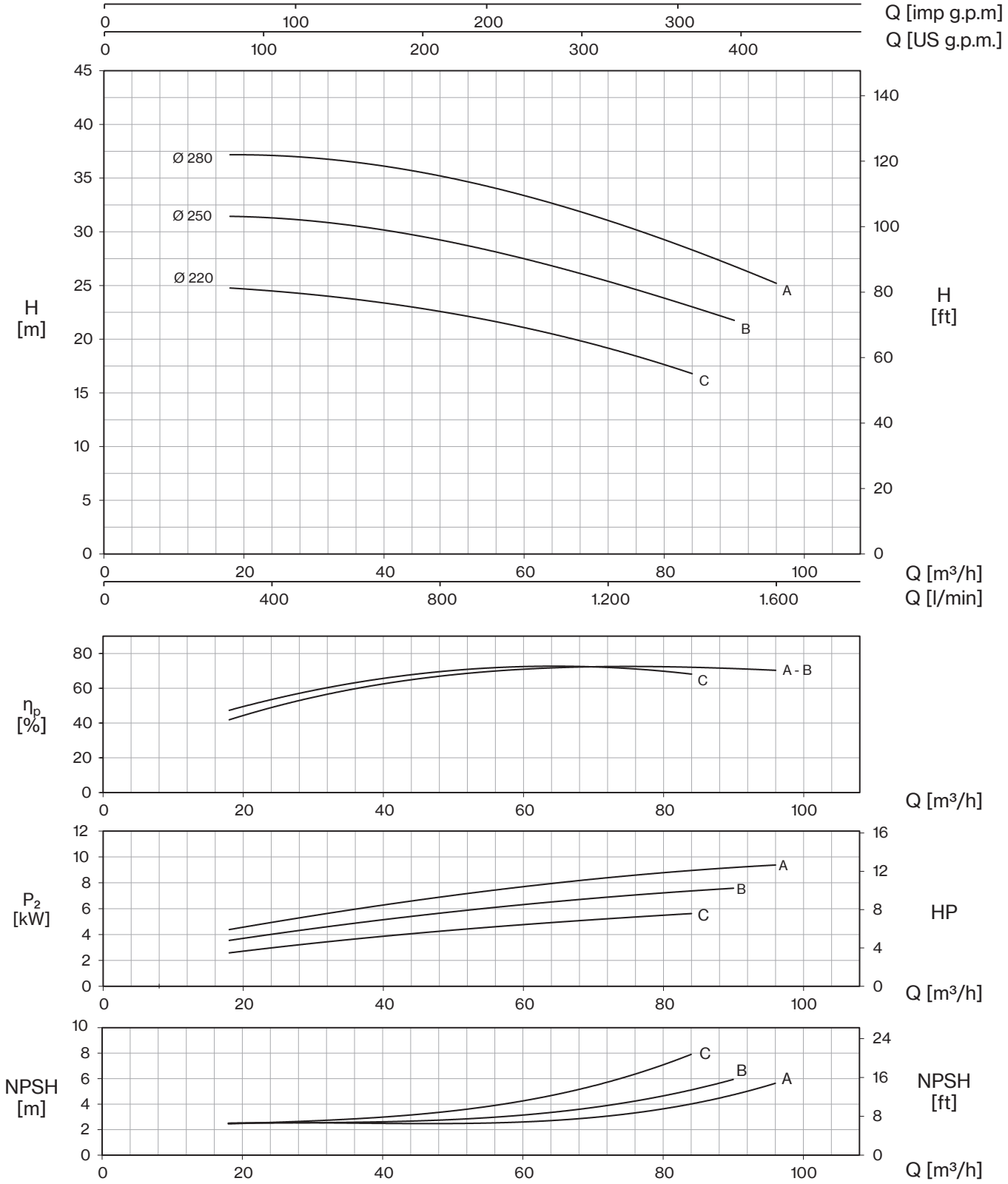
Q [imp g.p.m]
Q [US g.p.m.]
H [m]
H [ft]
Ø 280
Ø 250
Ø 220
A
B
C
Q [m³/h]
Q [l/min]
ηp [%]
A - B
P2 [kW]
HP
NPSH [m]
NPSH [ft]

65-125

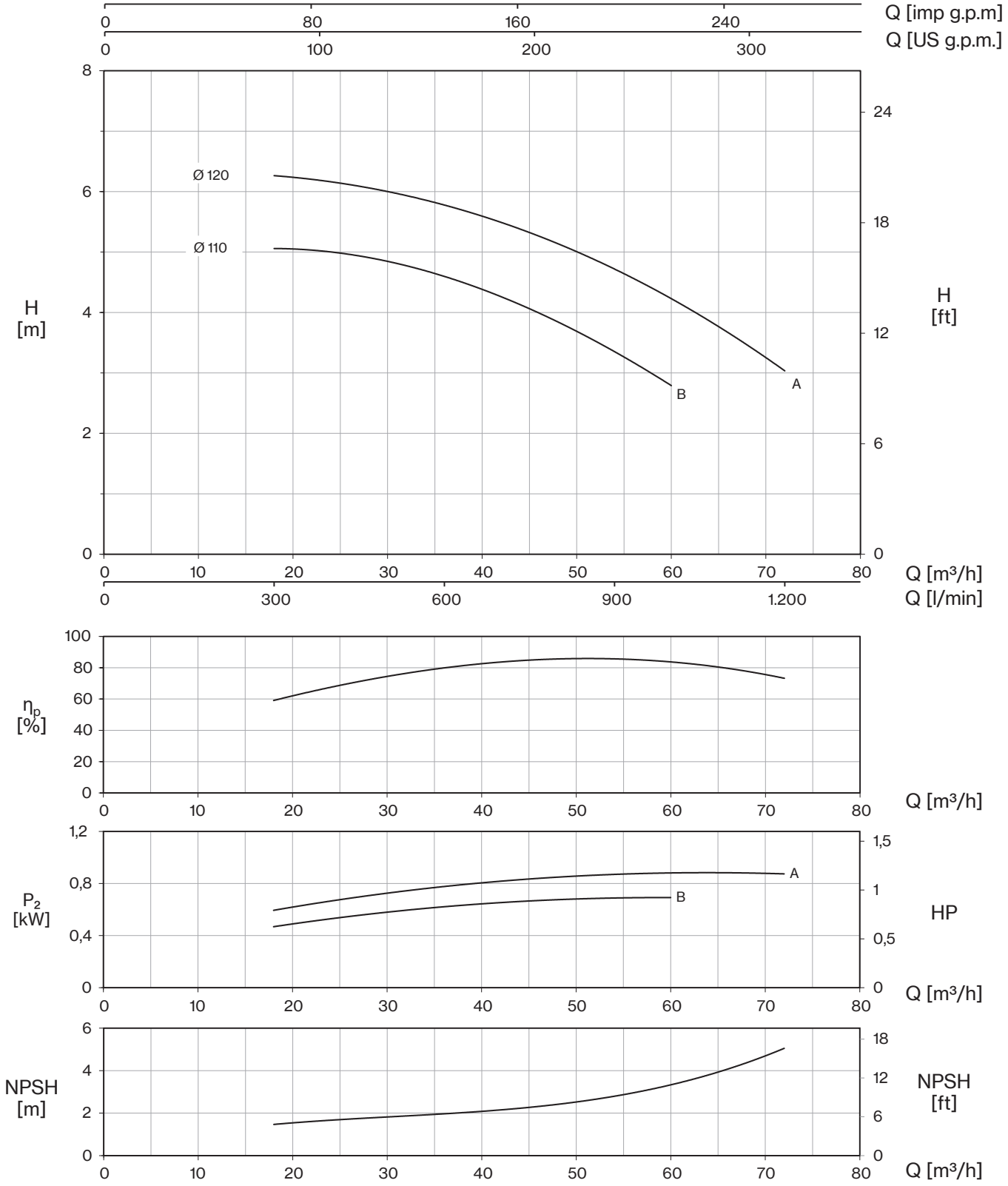

Tolerance: ISO 9906:2012 - Grade 3B
Check pumps availability on pages 92-93-94

65-160

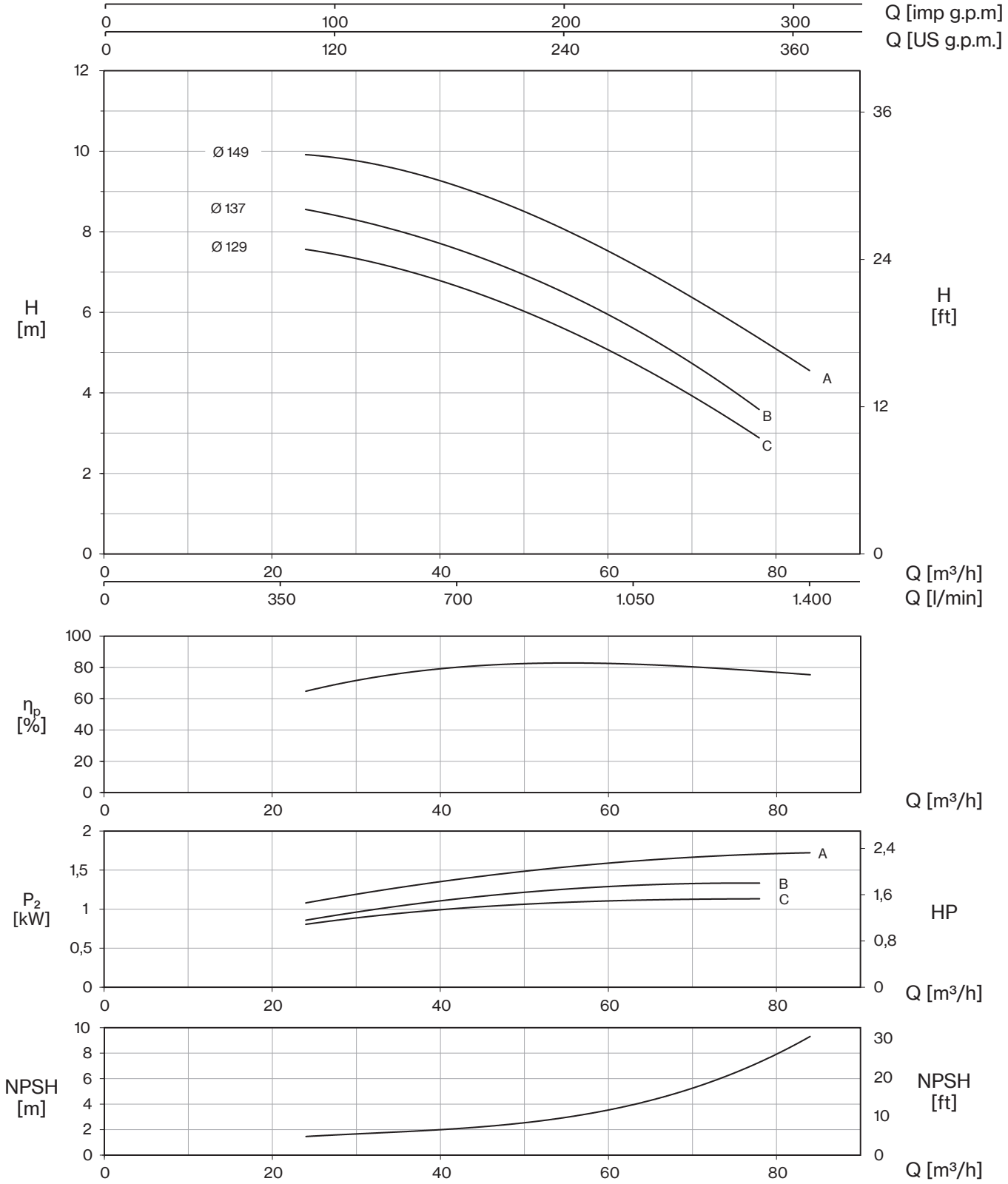
Q [imp g.p.m]
0
100
200
300
Q [US g.p.m.]
0
120
240
360
H
[m]
H
[ft]
Ø 149
Ø 137
Ø 129
A
B
C
Q [m³/h]
0
20
40
60
80
Q [l/min]
0
350
700
1.050
1.400
ηp
[%]
Q [m³/h]
P2
[kW]
HP
NPSH
[m]
NPSH
[ft]

65-200

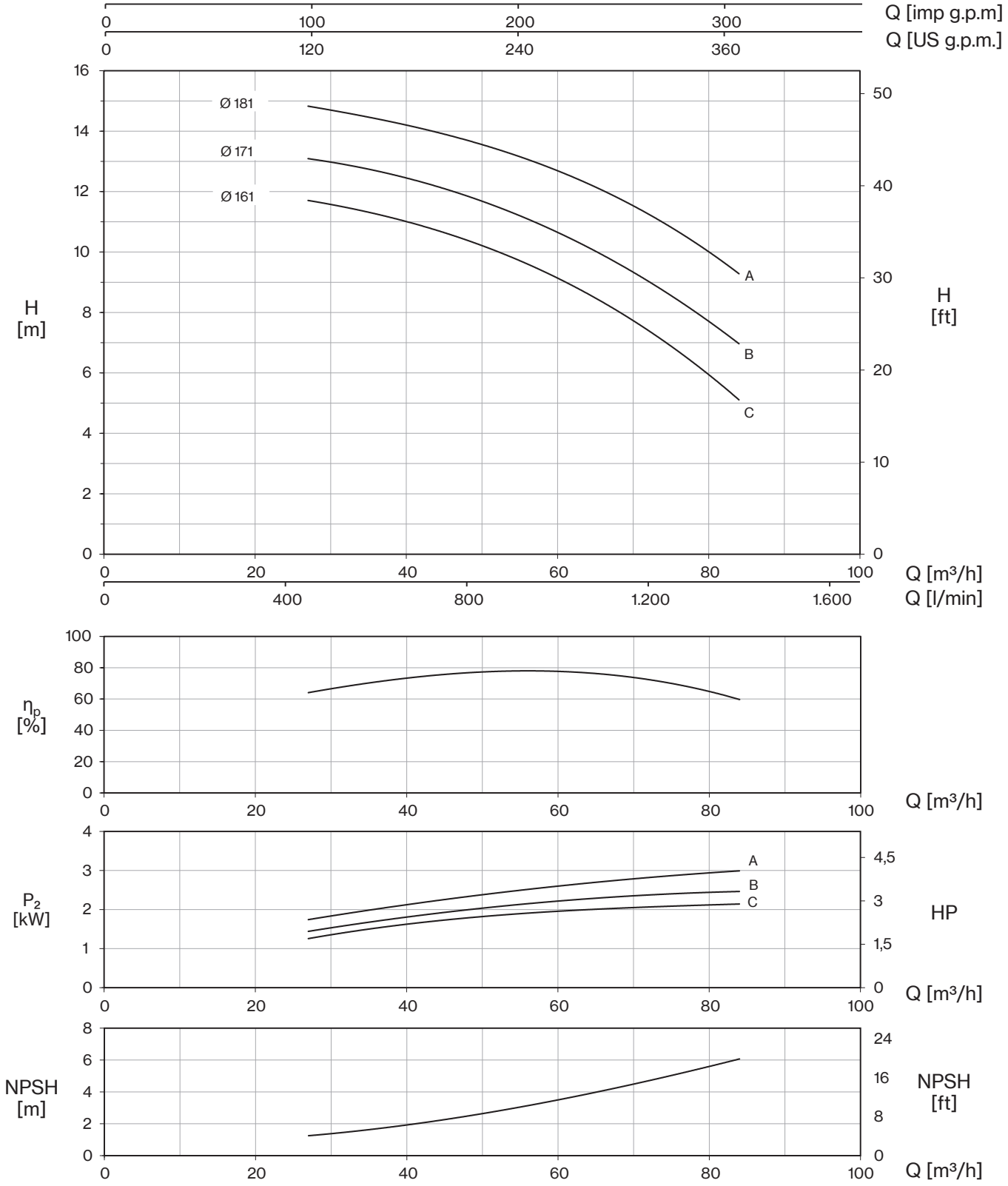

Tolerance: ISO 9906:2012 - Grade 3B
Check pumps availability on pages 92-93-94

65-250

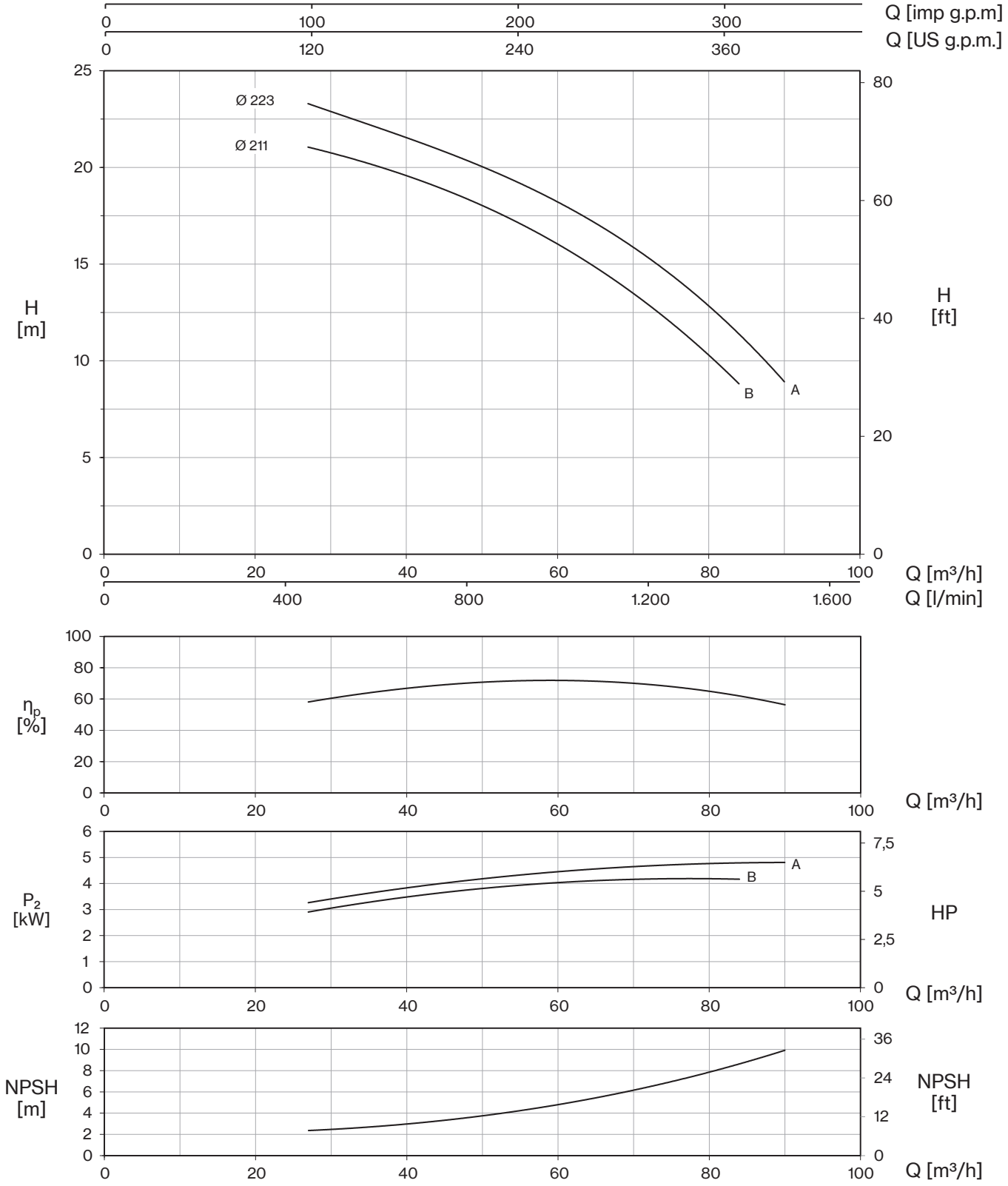
Q [imp g.p.m]
0
100
200
300
Q [US g.p.m.]
0
120
240
360
H
[m]
H
[ft]
Ø 223
Ø 211
A
B
Q [m³/h]
Q [l/min]
0
400
800
1.200
1.600
ηp
[%]
P2
[kW]
HP
NPSH
[m]
NPSH
[ft]

65-315

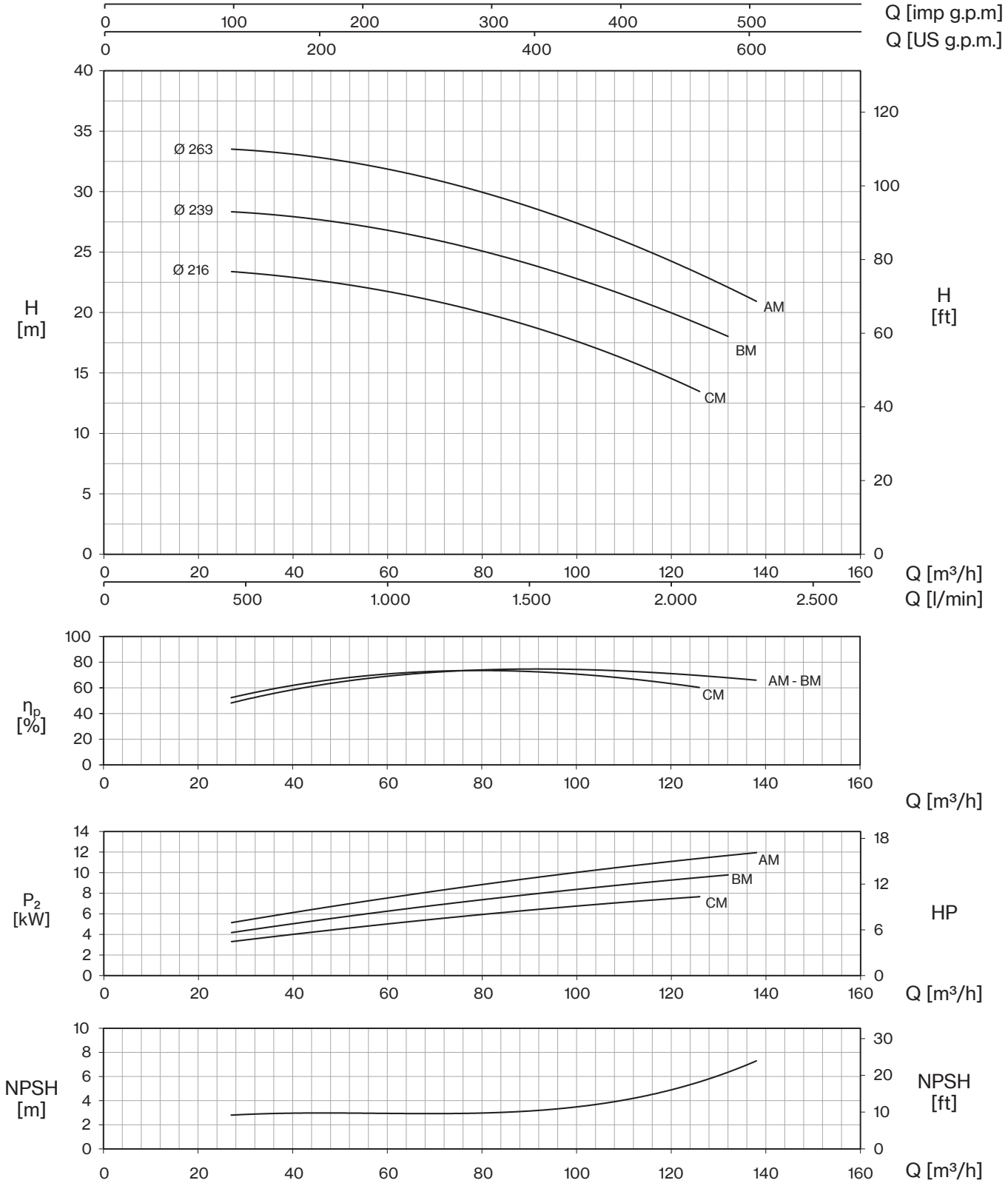

Tolerance: ISO 9906:2012 - Grade 3B
Check pumps availability on pages 92-93-94

80-160

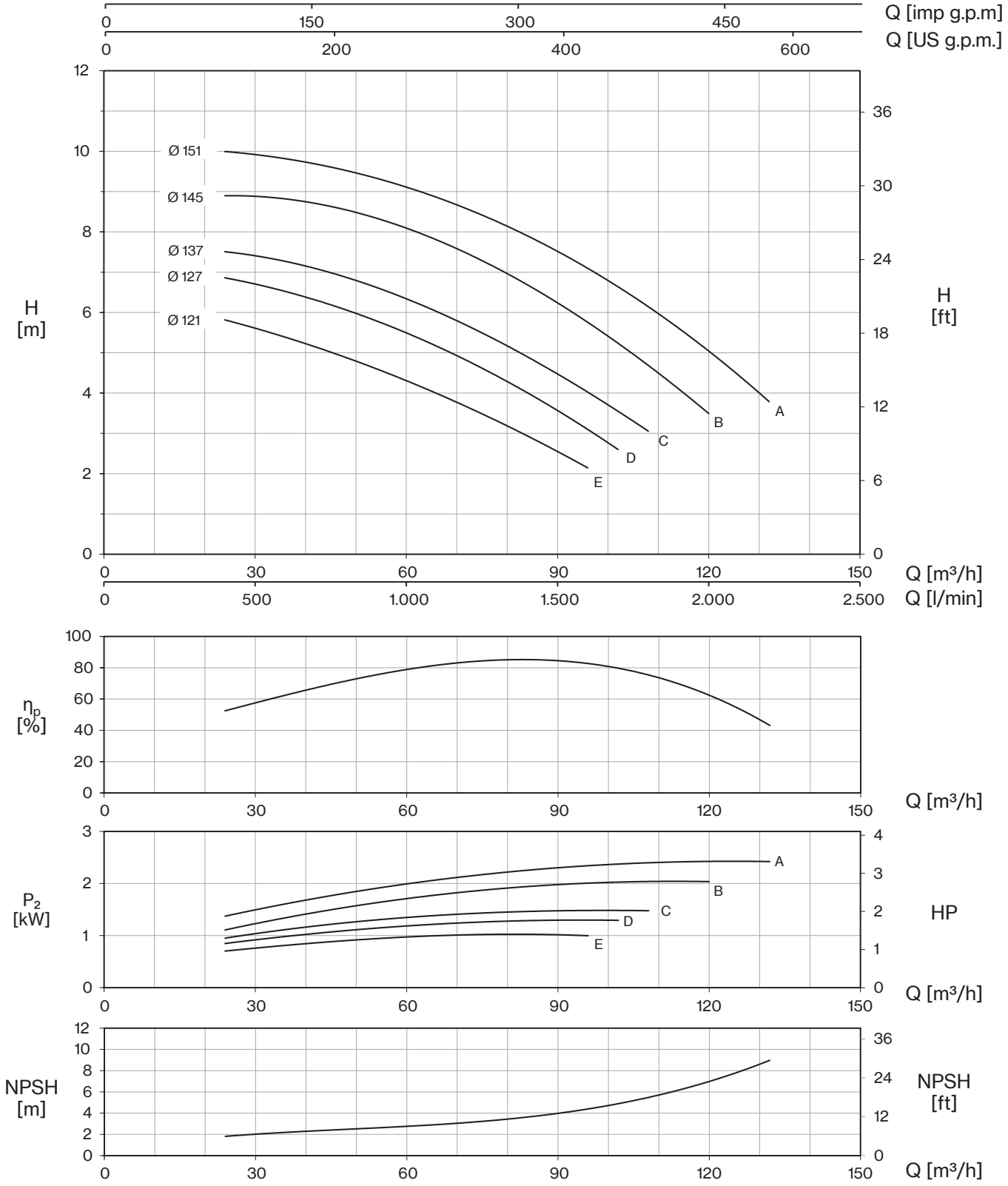
Q [imp g.p.m]
Q [US g.p.m.]
H [m]
H [ft]
Ø 151
Ø 145
Ø 137
Ø 127
Ø 121
A
B
C
D
E
Q [m³/h]
Q [l/min]
ηp [%]
P2 [kW]
HP
NPSH [m]
NPSH [ft]

80-200

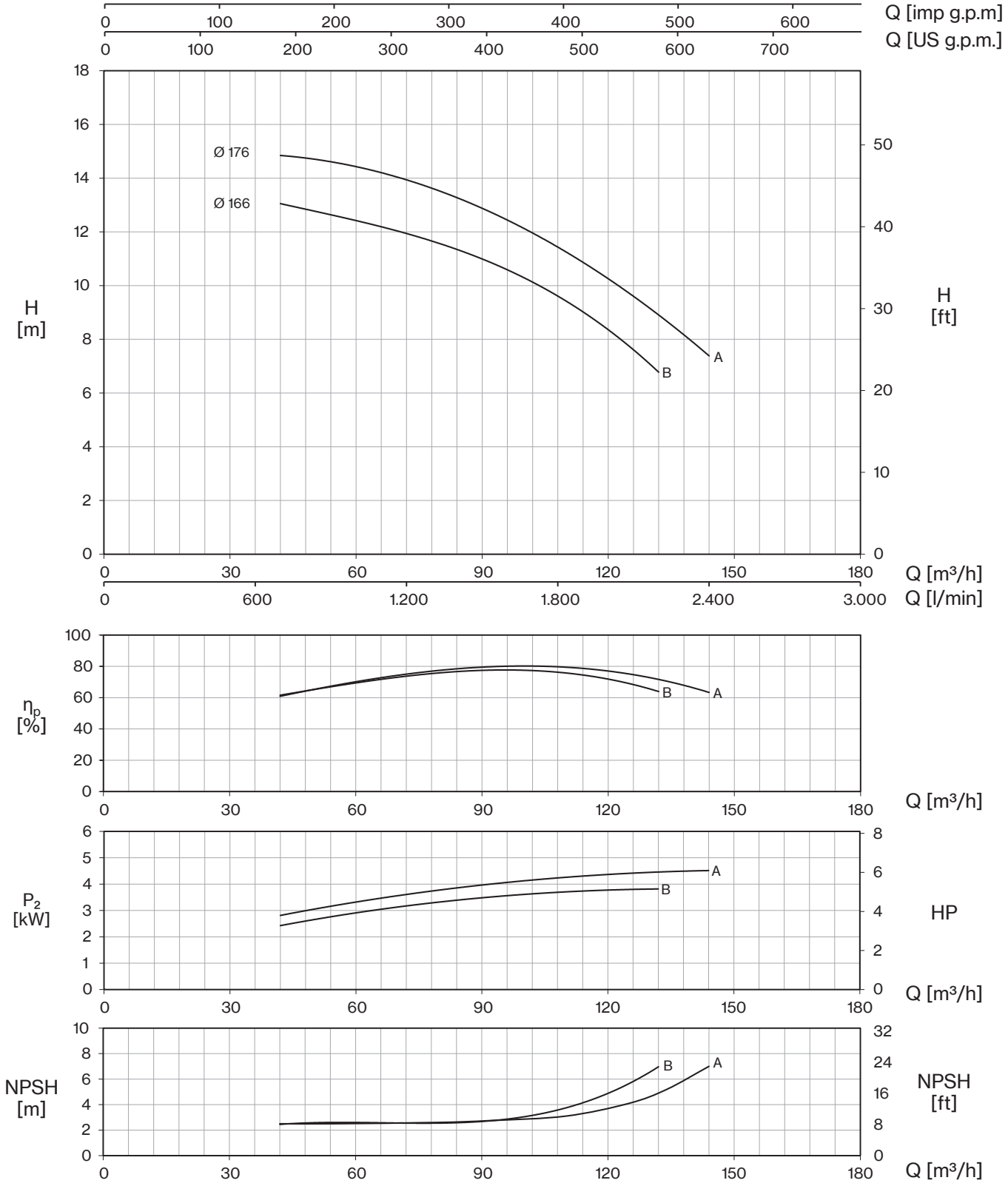

Tolerance: ISO 9906:2012 - Grade 3B
Check pumps availability on pages 92-93-94

80-250

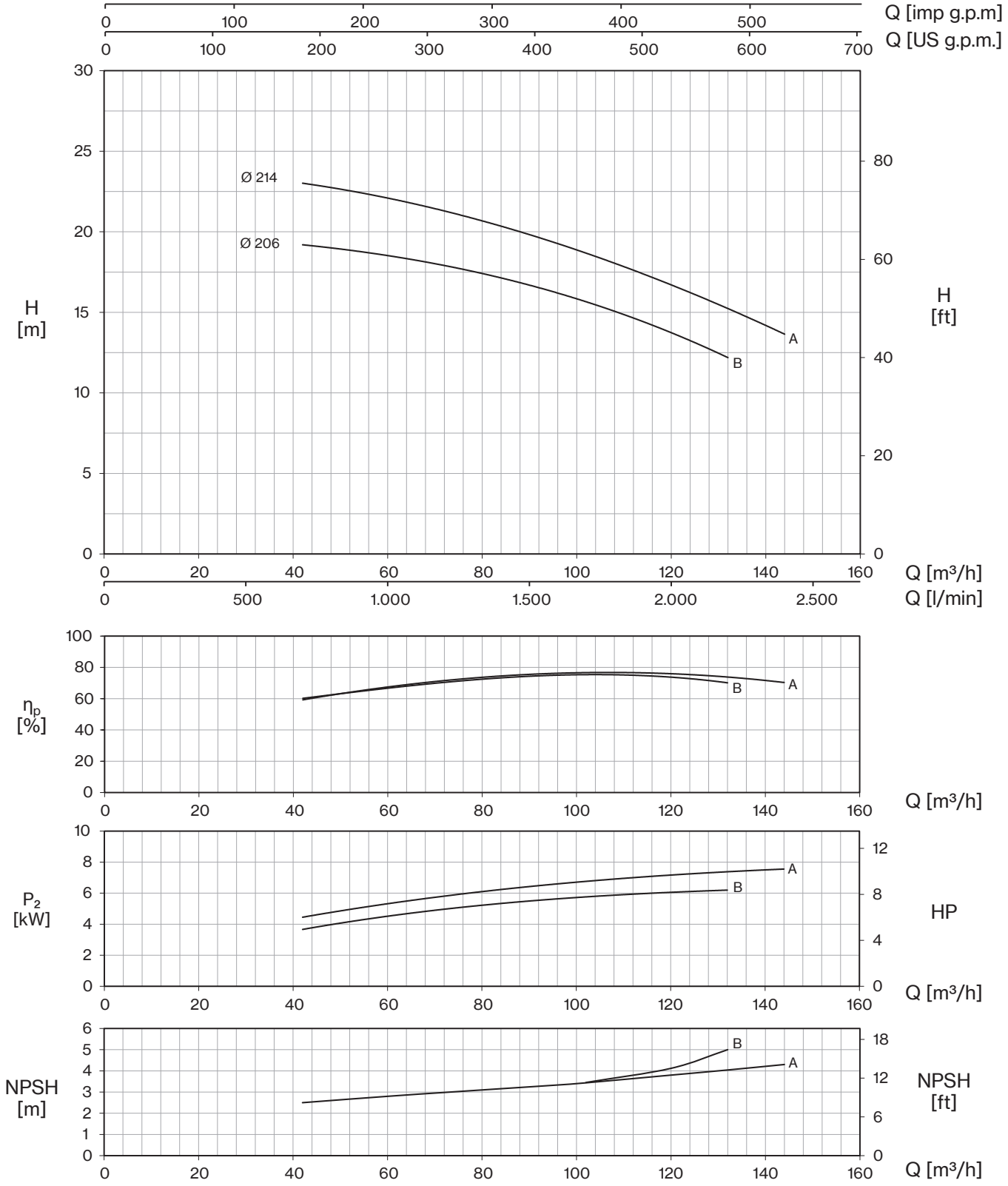
Q [imp g.p.m]
Q [US g.p.m.]
H [m]
H [ft]
Ø 214
Ø 206
A
B
Q [m³/h]
Q [l/min]
ηp [%]
P2 [kW]
HP
NPSH [m]
NPSH [ft]

80-315

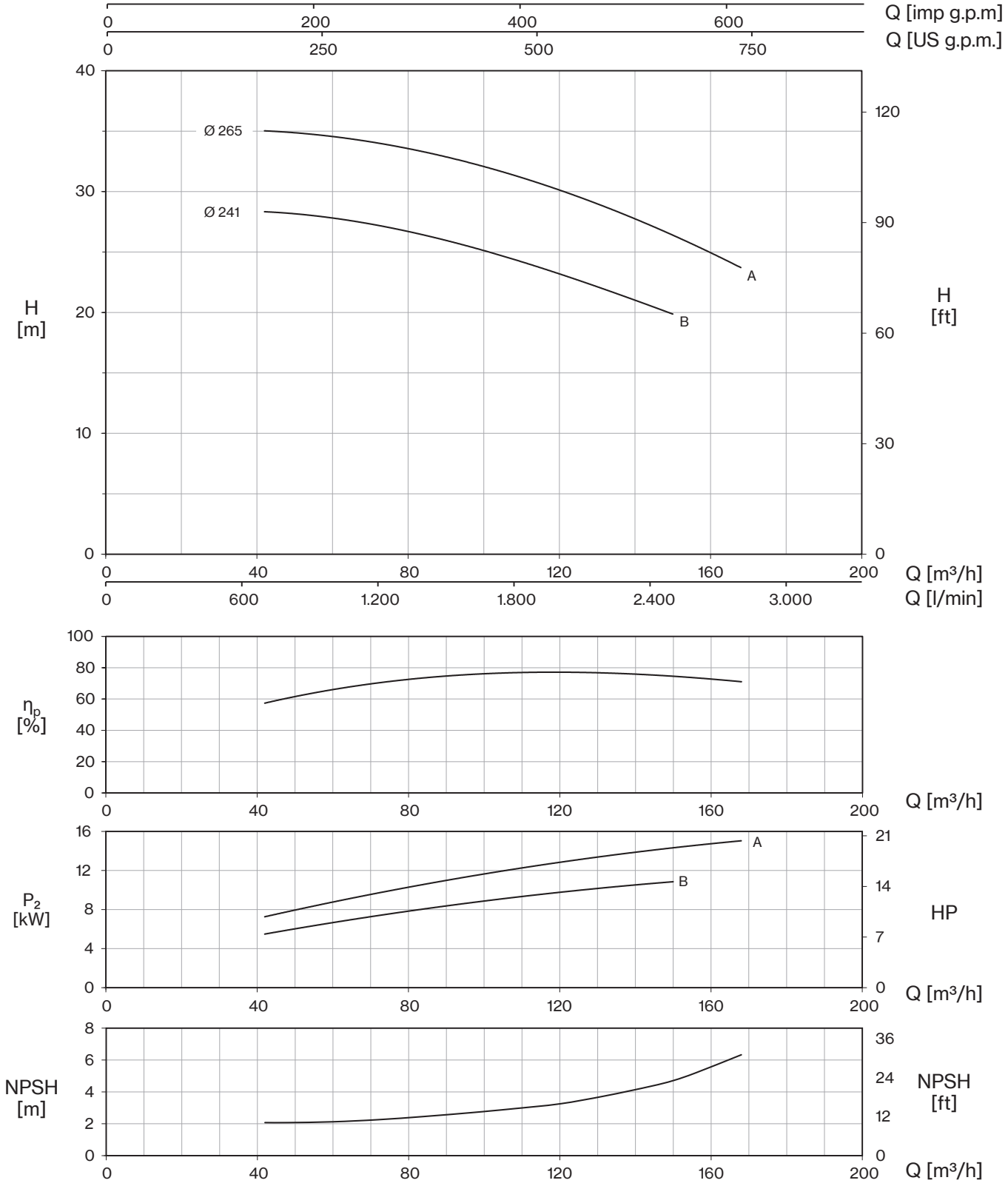

Tolerance: ISO 9906:2012 - Grade 3B
Check pumps availability on pages 92-93-94

100-200

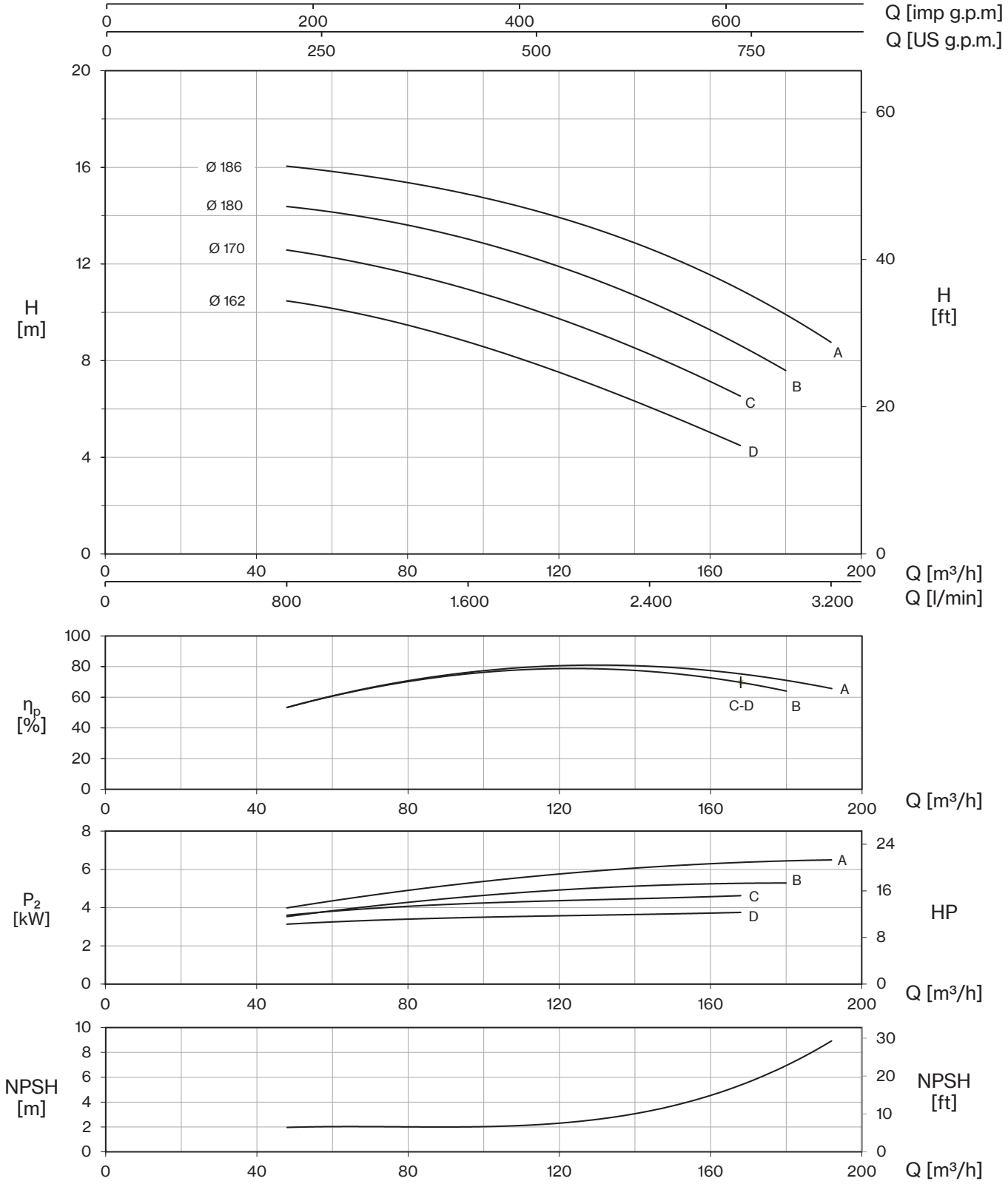
Q [imp g.p.m]
Q [US g.p.m.]
H [m]
H [ft]
Ø 186
Ø 180
Ø 170
Ø 162
A
B
C
D
Q [m³/h]
Q [l/min]
ηp [%]
C-D
P2 [kW]
HP
NPSH [m]
NPSH [ft]

100-250

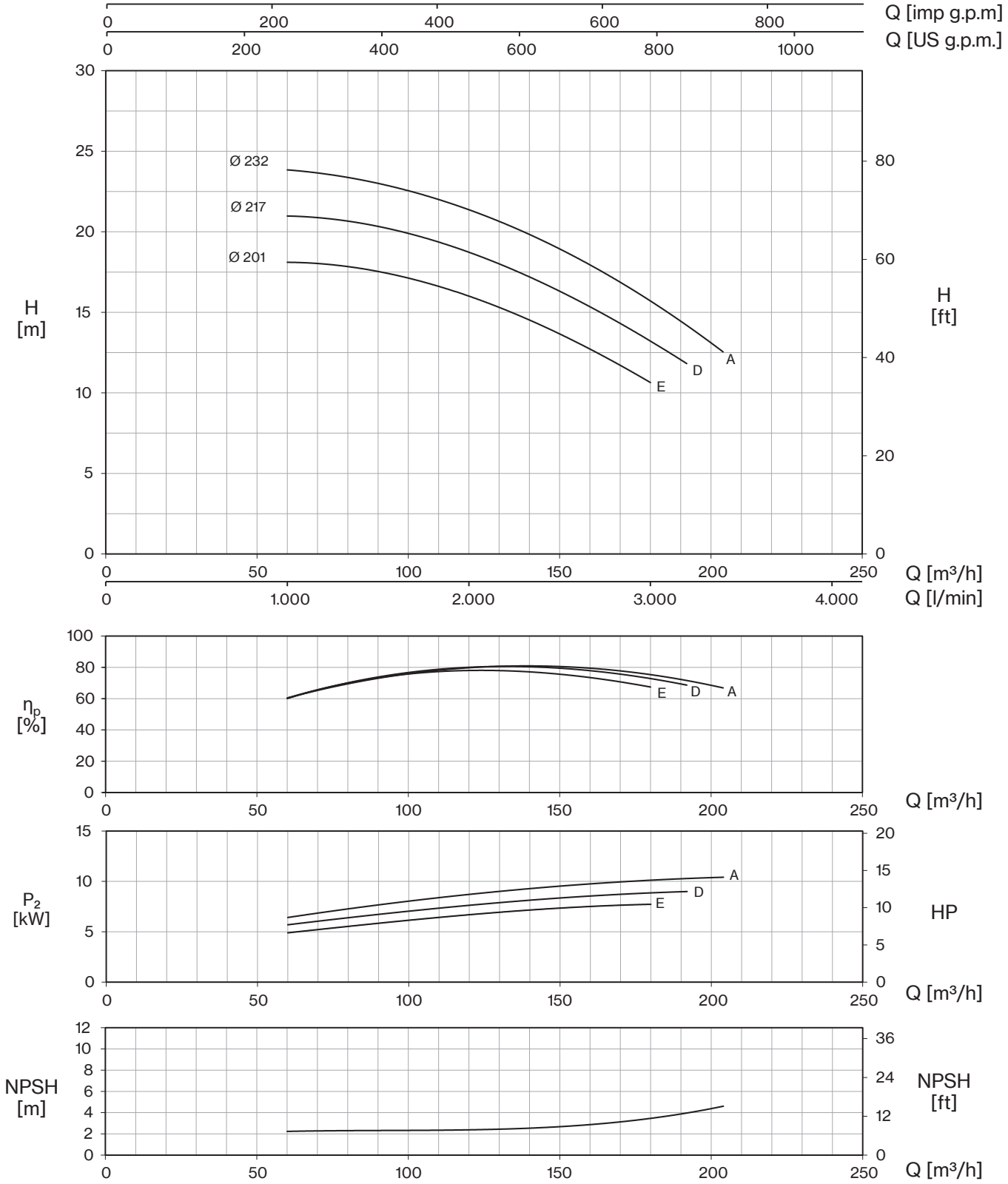

Tolerance: ISO 9906:2012 - Grade 3B
Check pumps availability on pages 92-93-94

100-315

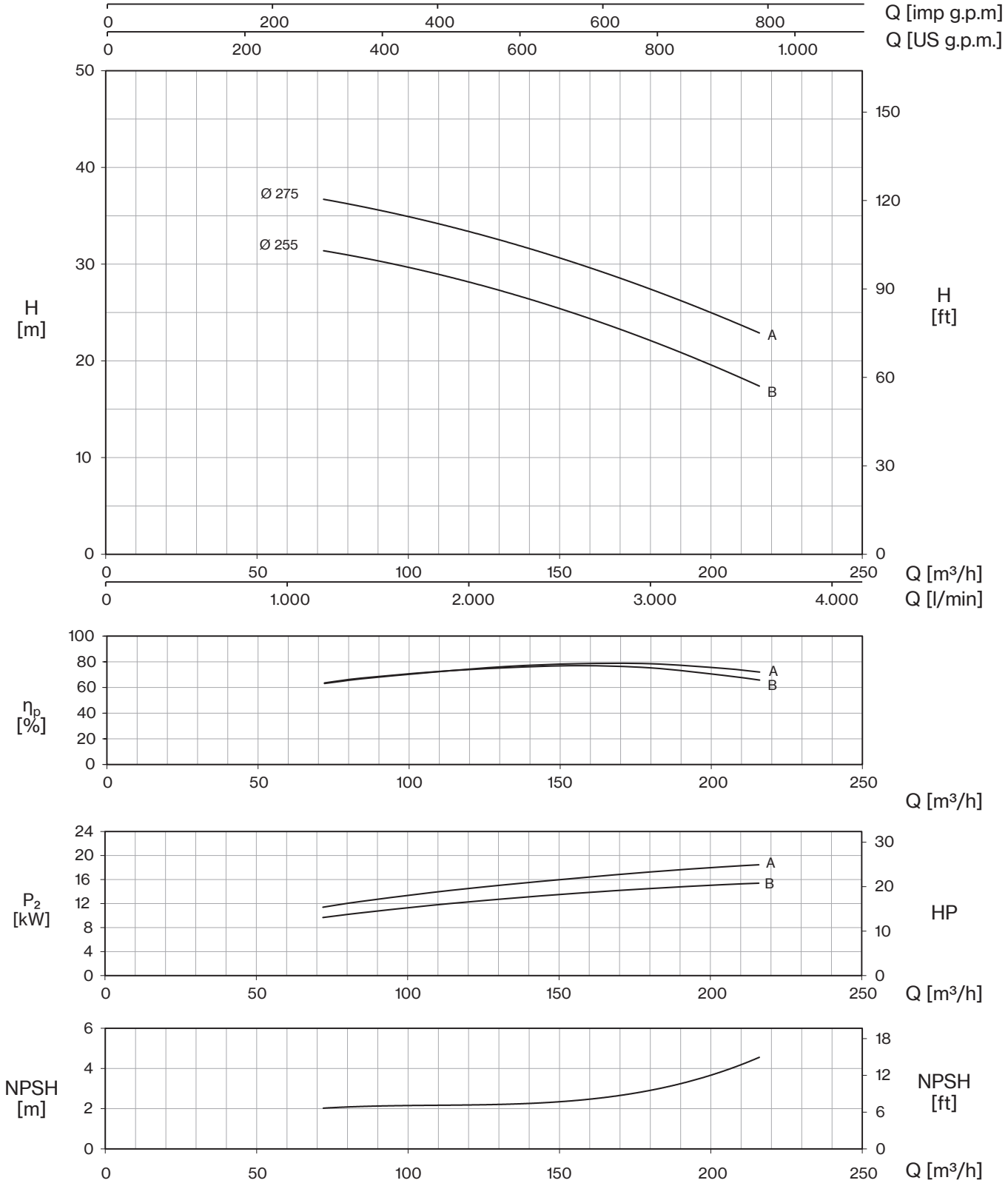
Q [imp g.p.m]
Q [US g.p.m.]
H [m]
H [ft]
Ø 275
Ø 255
A
B
Q [m³/h]
Q [l/min]
ηp [%]
P2 [kW]
HP
NPSH [m]
NPSH [ft]

100-400

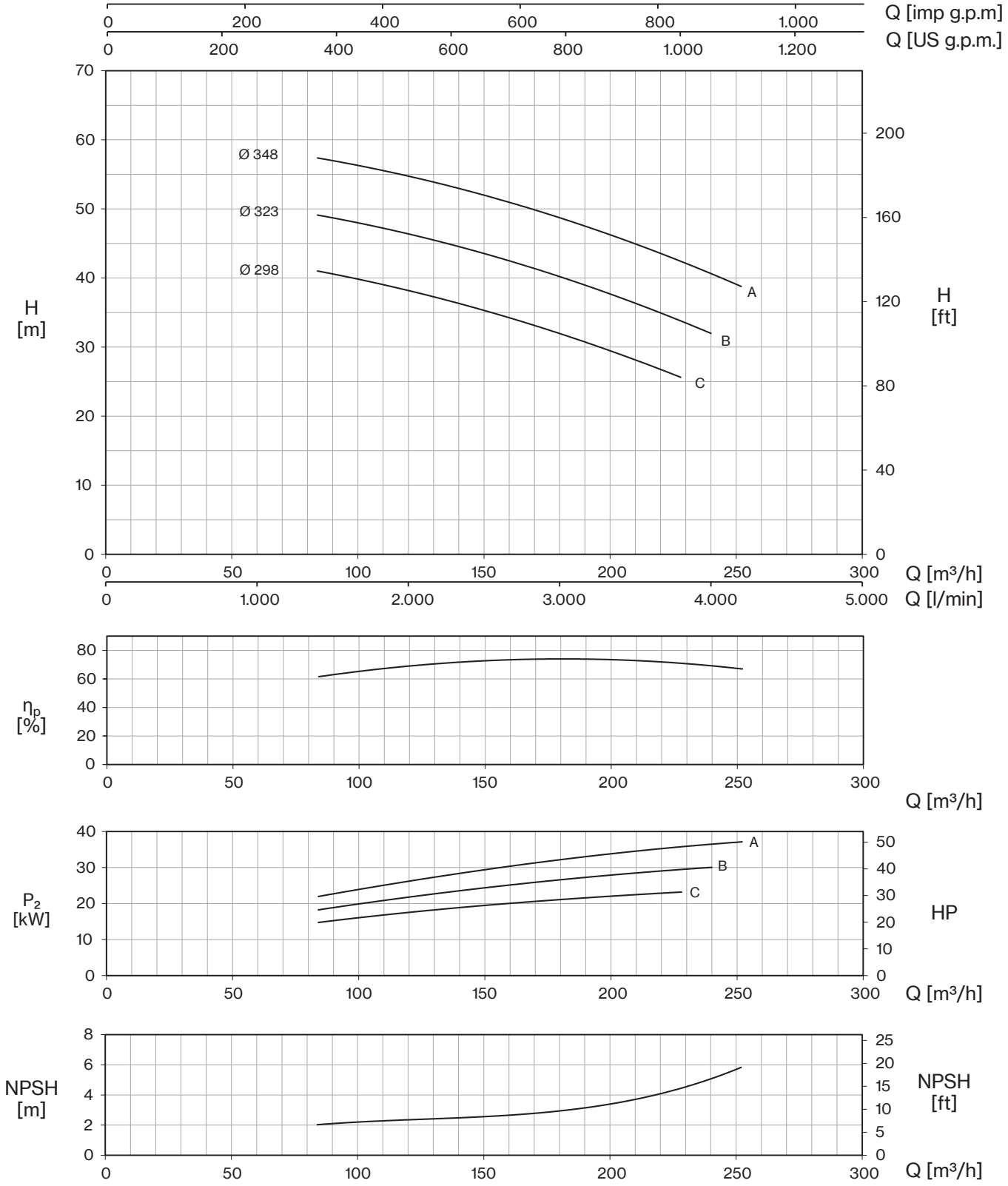

Tolerance: ISO 9906:2012 - Grade 3B
Check pumps availability on pages 92-93-94

125-250

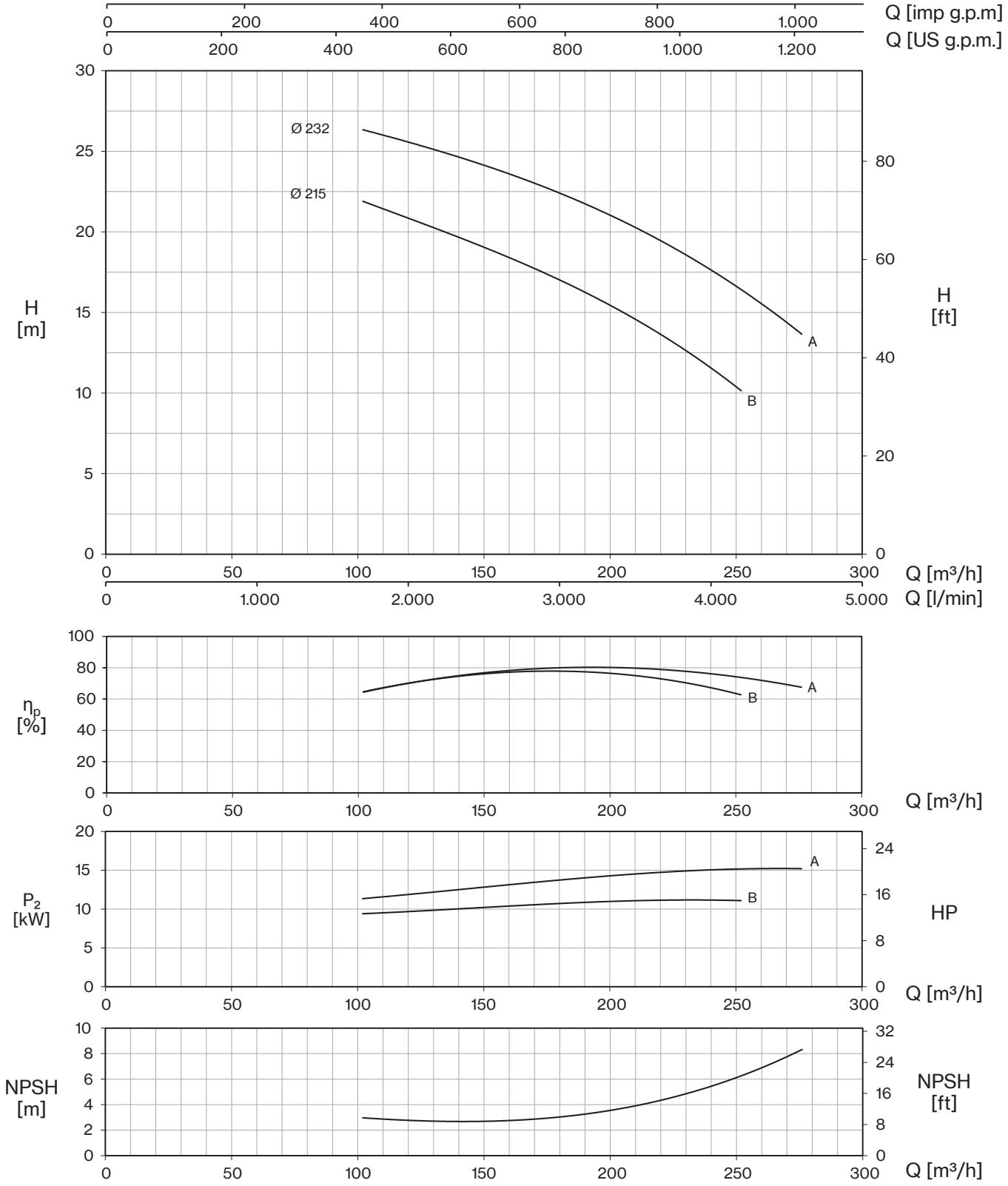
Q [imp g.p.m]
Q [US g.p.m.]
Ø 232
Ø 215
H [m]
H [ft]
A
B
Q [m³/h]
Q [l/min]
ηp [%]
P2 [kW]
HP
NPSH [m]
NPSH [ft]

125-315

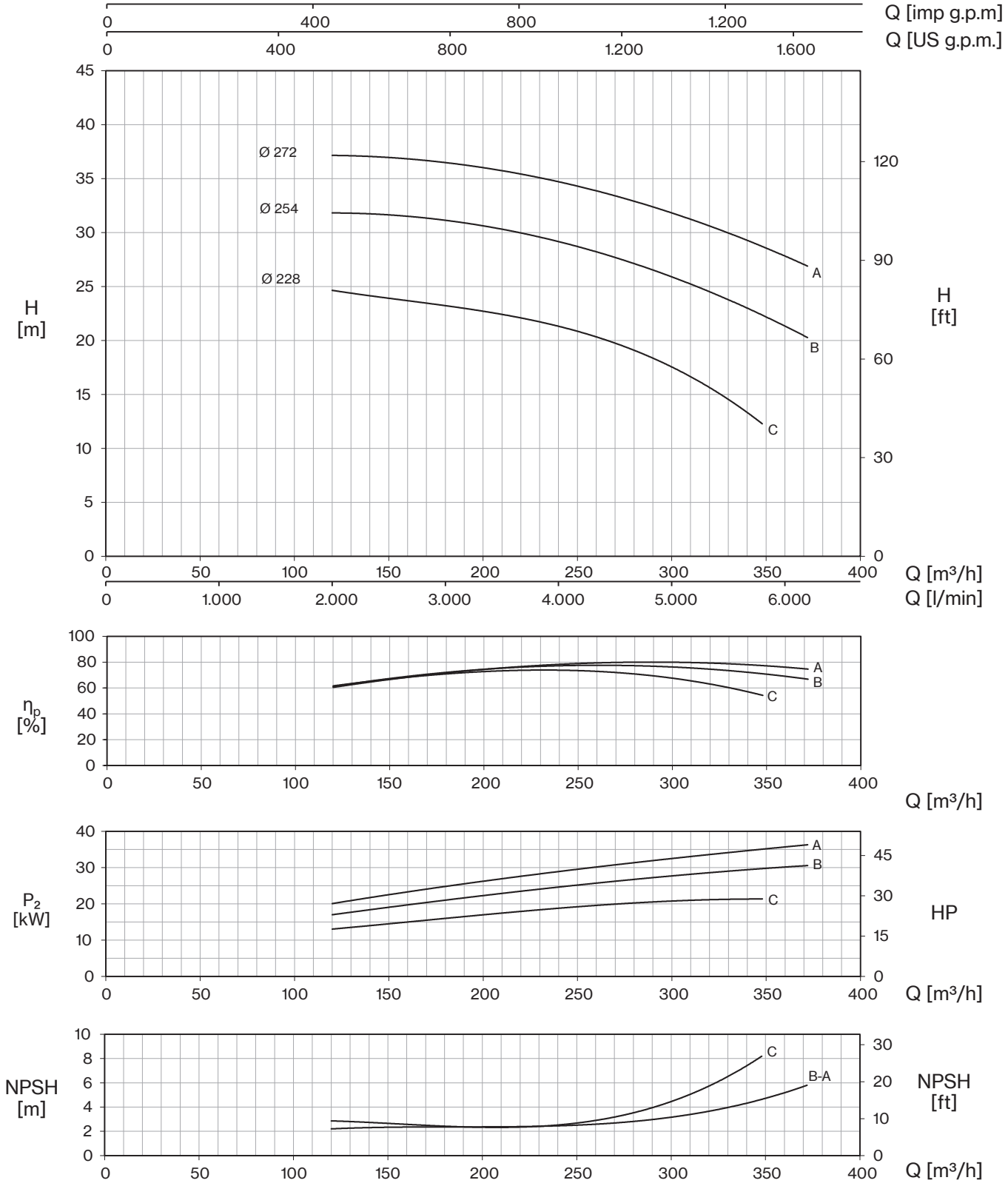

Tolerance: ISO 9906:2012 - Grade 3B
Check pumps availability on pages 92-93-94

125-400

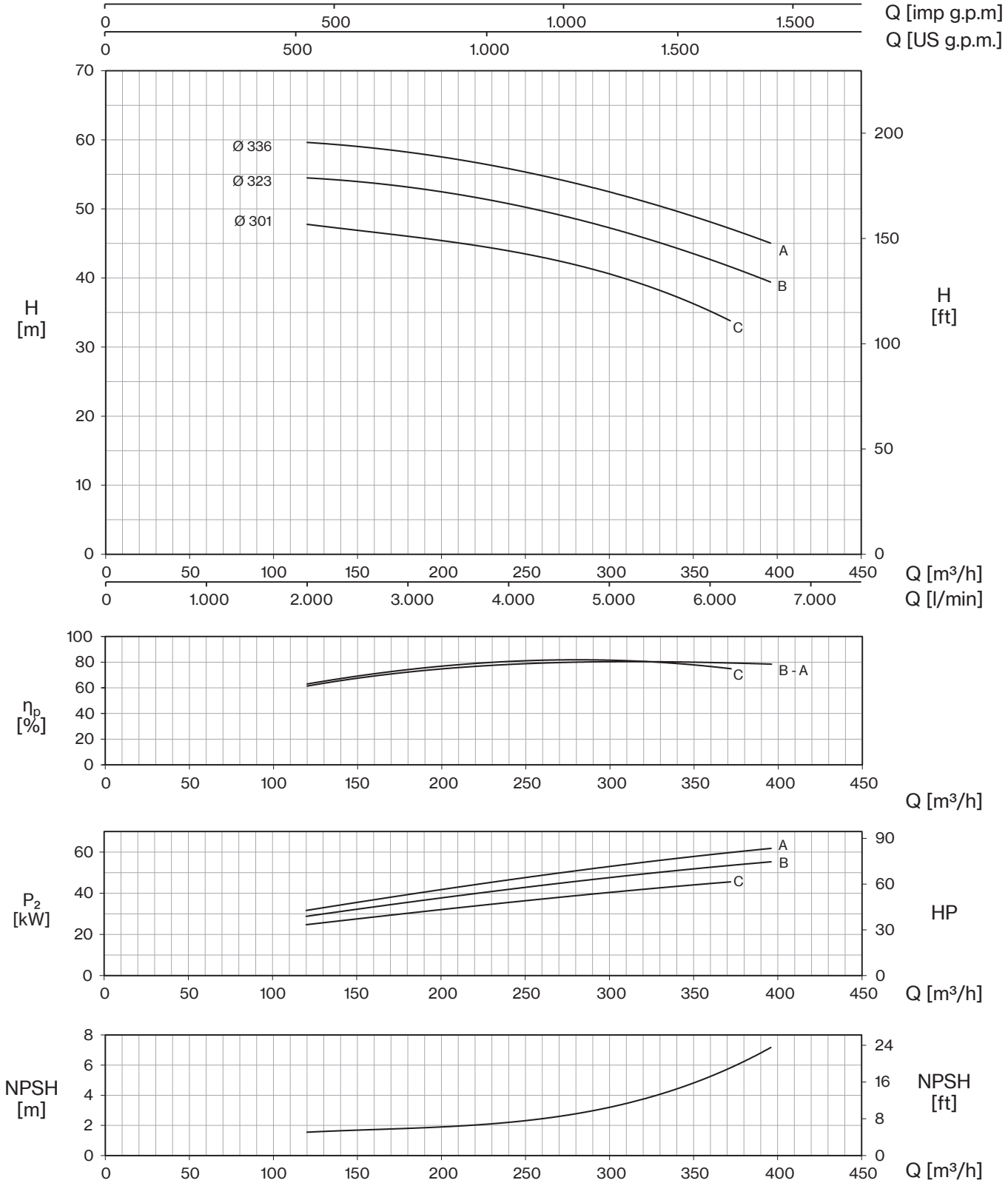
Q [imp g.p.m]
Q [US g.p.m.]
H [m]
H [ft]
Ø 336
Ø 323
Ø 301
A
B
C
Q [m³/h]
Q [l/min]
ηp [%]
B - A
P2 [kW]
HP
NPSH [m]
NPSH [ft]

150-315

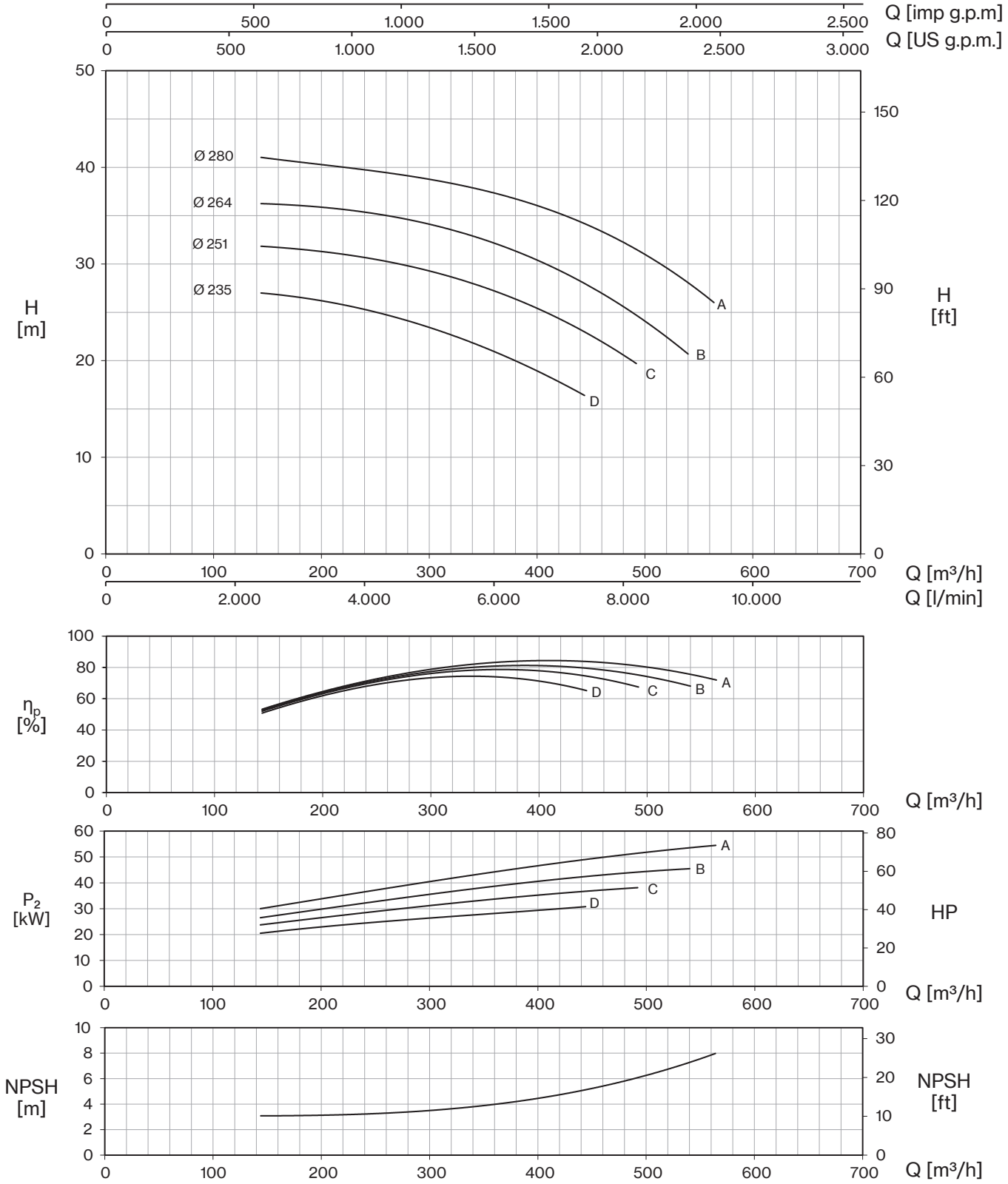

Tolerance: ISO 9906:2012 - Grade 3B
Check pumps availability on pages 92-93-94

150-400

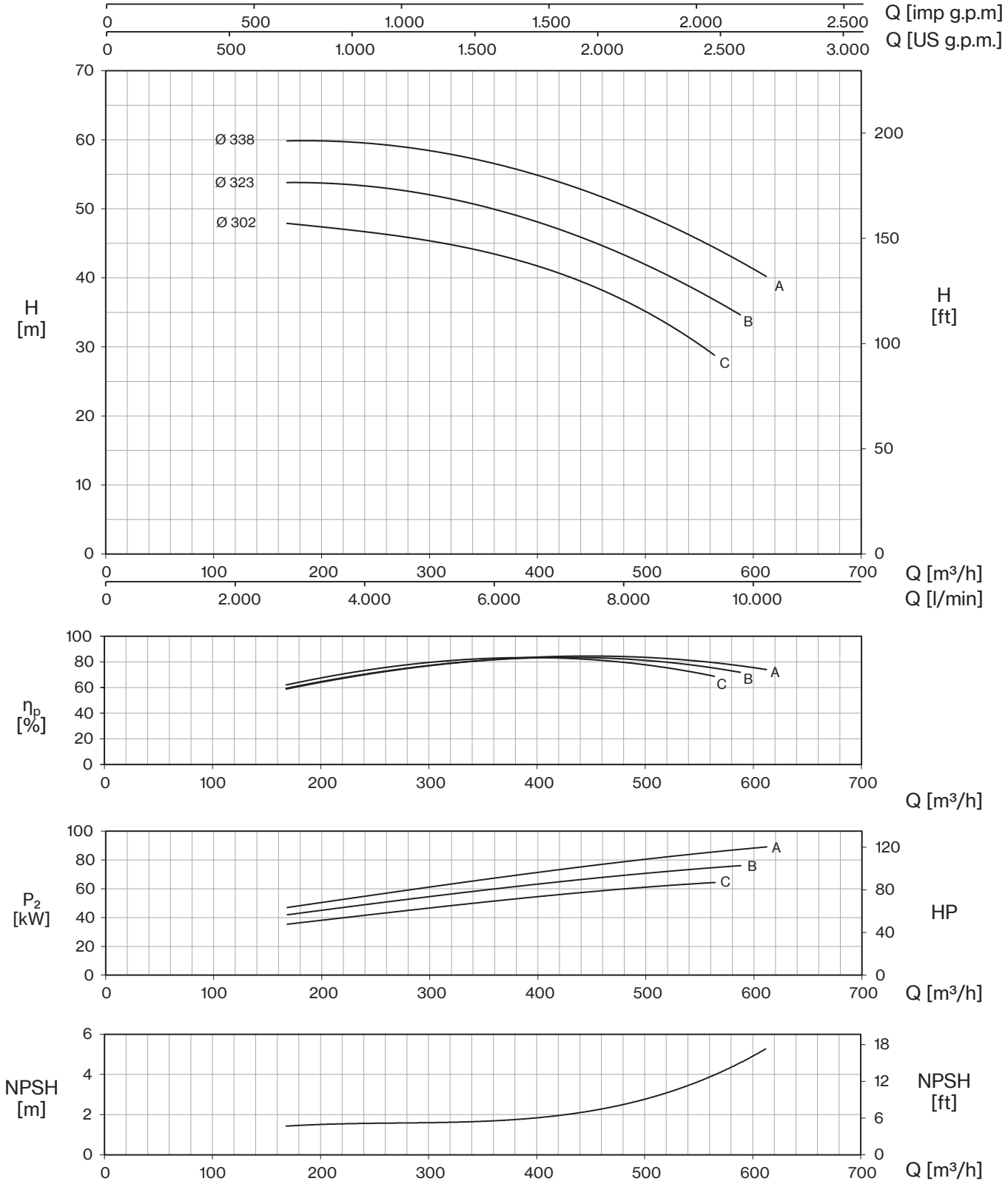
Q [imp g.p.m]
Q [US g.p.m.]
H [m]
H [ft]
Ø 338
Ø 323
Ø 302
A
B
C
Q [m³/h]
Q [l/min]
ηp [%]
P2 [kW]
HP
NPSH [m]
NPSH [ft]

200-315

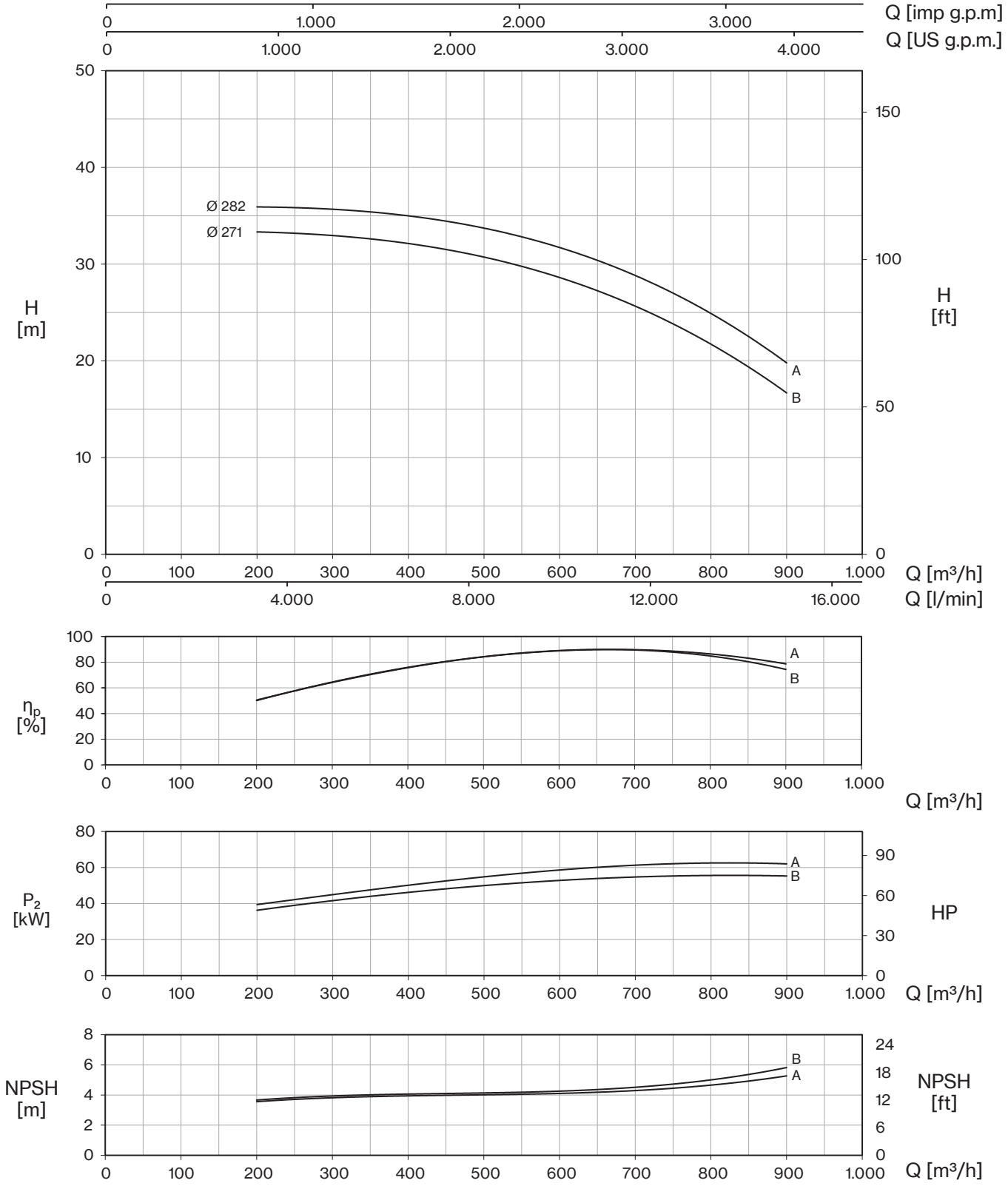

Tolerance: ISO 9906:2012 - Grade 3B
Check pumps availability on pages 92-93-94

200-400

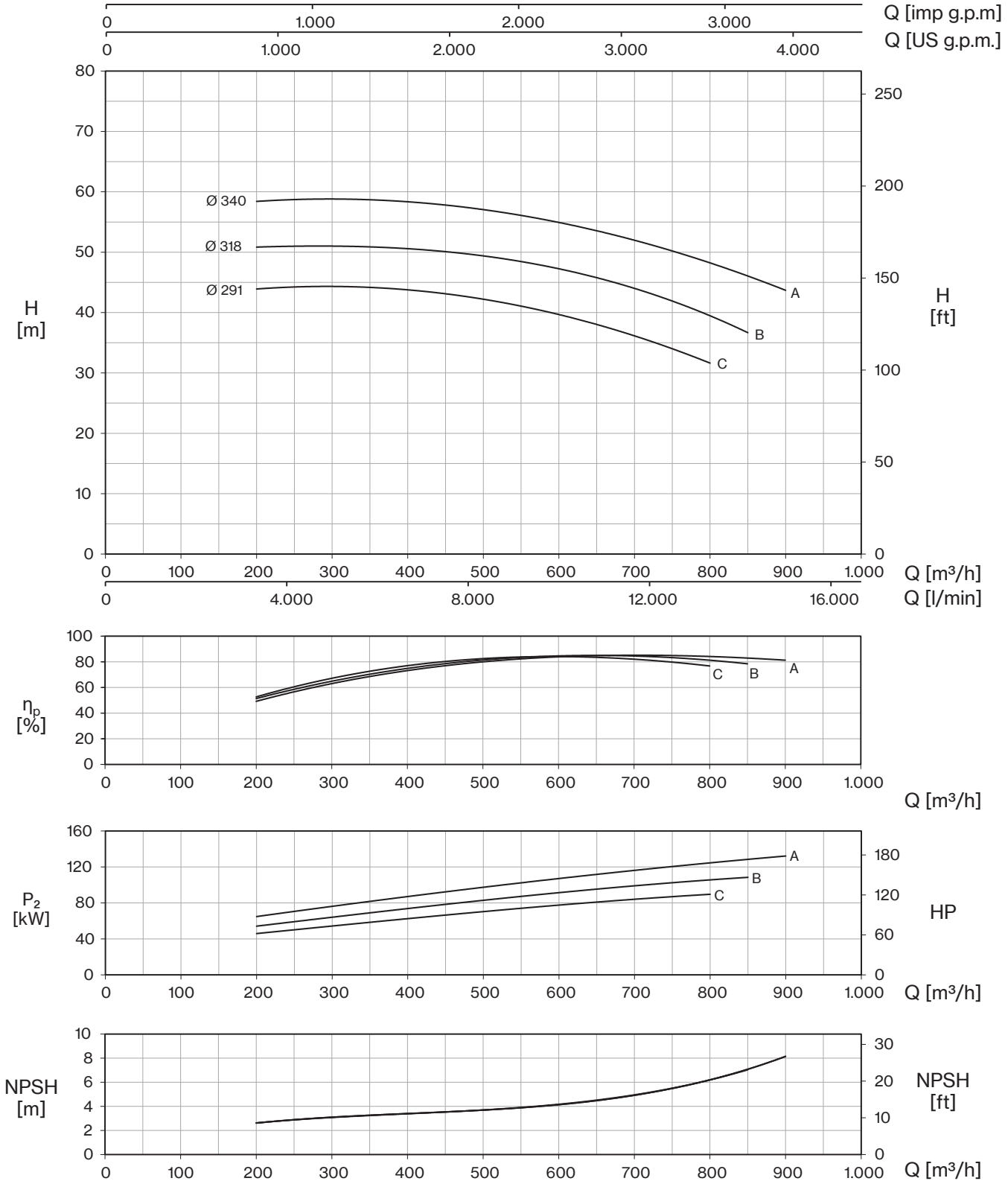
Q [imp g.p.m]
Q [US g.p.m.]
H [m]
H [ft]
Ø 340
Ø 318
Ø 291
A
B
C
Q [m³/h]
Q [l/min]
ηp [%]
P2 [kW]
HP
NPSH [m]
NPSH [ft]

250-315

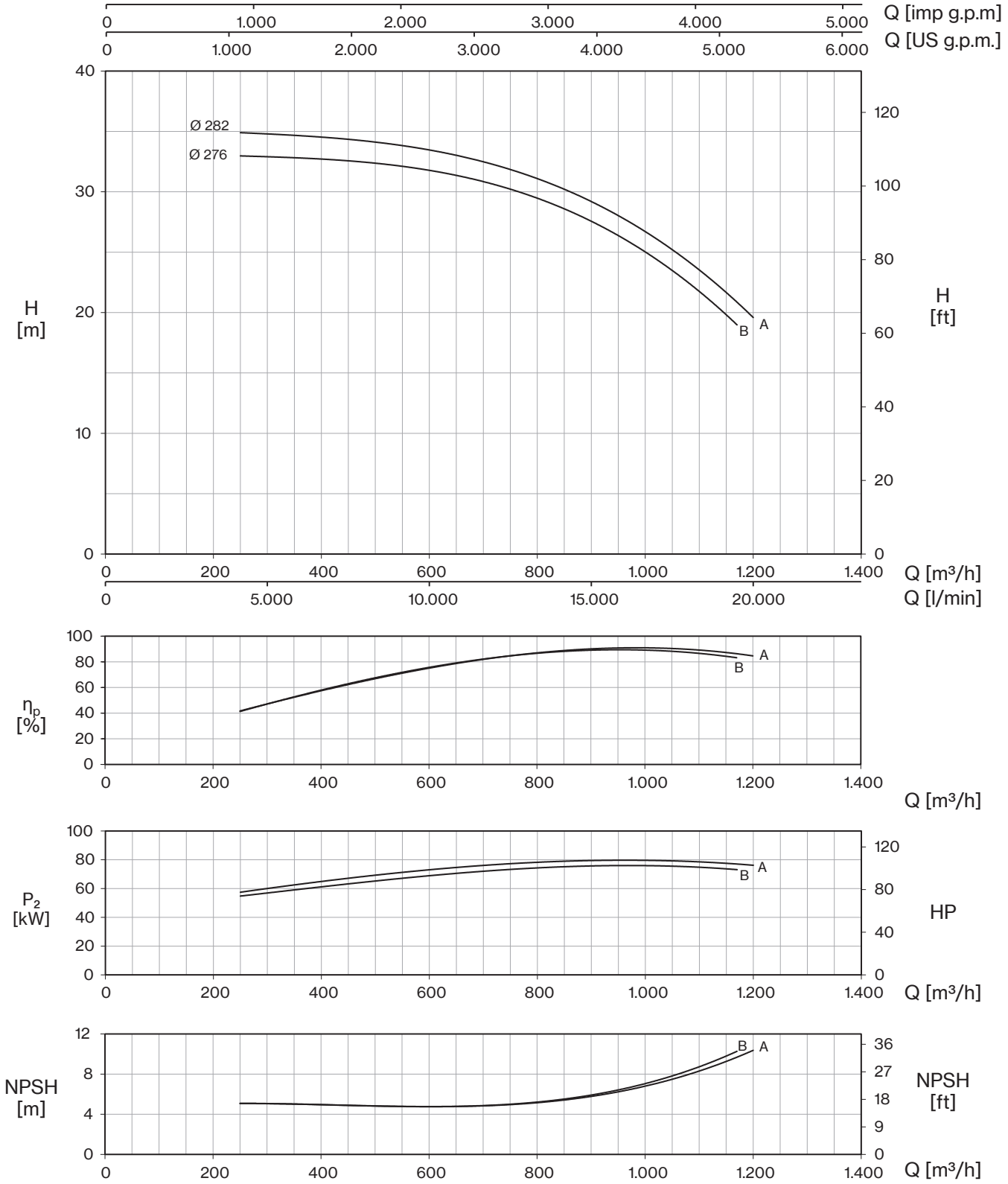

Tolerance: ISO 9906:2012 - Grade 3B
Check pumps availability on pages 92-93-94

250-400

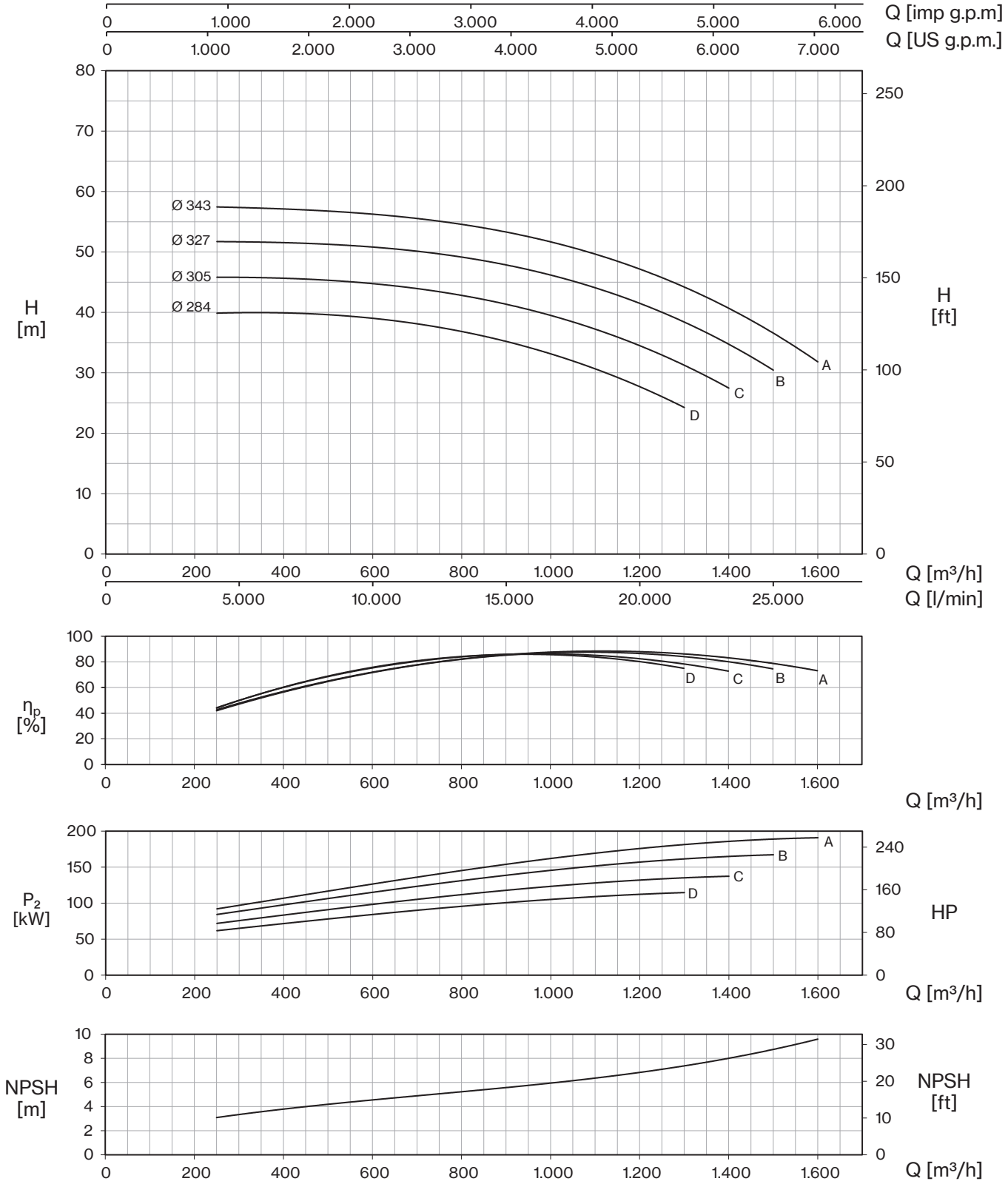
Q [imp g.p.m]
Q [US g.p.m.]
H [m]
H [ft]
Ø 343
Ø 327
Ø 305
Ø 284
A
B
C
D
Q [m³/h]
Q [l/min]
ηp [%]
P2 [kW]
HP
NPSH [m]
NPSH [ft]

MN ~ *EN 733*

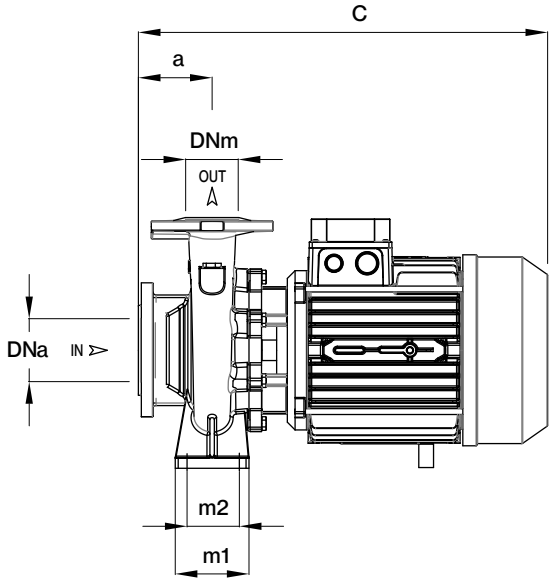

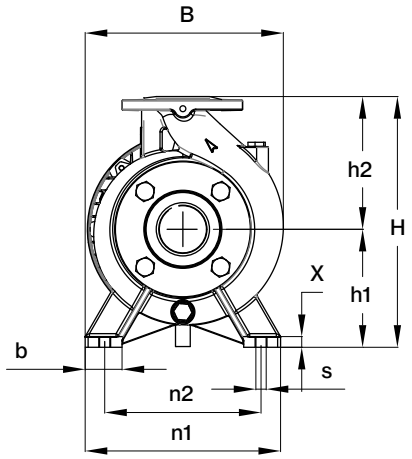

TYPE		MEC	DIMENSIONS (mm)																		Kg	
1~	3~		a	h1	h2	m1	m2	n1	n2	b	x	s	C	B	H	DNA	DNM	l	L	M	1~	3~
32-160 C	**32-160 C**	90	80	132	160	100	70	240	190	50	12	14	495	240	292			551	250	341	35,5	35,5
32-160 B	**32-160 B**	90	80	132	160	100	70	240	190	50	12	14	495	240	292			551	250	341	36,5	36,5
-	**32-160 A**	90	80	132	160	100	70	240	190	50	12	14	495	240	292			551	250	341	-	41,5
32-200 C	**-**	112	80	160	180	100	70	240	190	50	12	14	543	268	340			602	263	395	59,5	-
-	**32-200 C**	100	80	160	180	100	70	240	190	50	12	14	499	268	340			602	263	395	-	51
-	**32-200 B1**	112	80	160	180	100	70	240	190	50	12	14	543	268	340			627	287	408	-	60
-	**32-200 B**	132	80	160	180	100	70	240	190	50	12	14	532	268	340	50	32	627	287	408	-	67
-	**32-200 A1**	112	80	160	180	100	70	240	190	50	12	14	543	268	340			627	287	408	-	66
-	**32-200 A**	132	80	160	180	100	70	240	190	50	12	14	532	268	340			627	287	408	-	73
-	**32-250 C**	132	100	180	225	125	95	320	250	65	12	14	591	305	405			666	346	471	-	96,5
-	**32-250 B**	132	100	180	225	125	95	320	250	65	14	14	591	305	405			666	346	471	-	99
-	**32-250 A1**	132	100	180	225	125	95	320	250	65	14	14	634	305	405			810	354	480	-	104,5
-	**32-250 A**	160	100	180	225	125	95	320	250	65	14	14	674	305	405			810	354	480	-	126,5
40-125 C	**40-125 C**	90	80	112	140	100	70	210	160	50	12	14	492	220	252			551	250	341	34,5	34,5
40-125 B	**40-125 B**	90	80	112	140	100	70	210	160	50	12	14	492	220	252			551	250	341	35,5	35,5
-	**40-125 A**	90	80	112	140	100	70	210	160	50	12	14	492	220	252			551	250	341	-	39,5
40-160 B	**-**	100	80	132	160	100	70	240	190	50	12	14	500	245	292			551	250	341	49,5	-
-	**40-160 B**	100	80	132	160	100	70	240	190	50	12	14	500	245	292			551	250	341	-	45,5
40-160 A	**-**	112	80	132	160	100	70	240	190	50	15	14	544	245	292			602	263	395	58	-
-	**40-160 A**	100	80	132	160	100	70	240	190	50	15	14	500	245	292			602	263	395	-	49,5
-	**40-160 AP**	112	80	132	160	100	70	240	190	50	15	14	544	245	292			627	287	408	-	56,5
-	**40-200 B1**	112	100	160	180	100	70	265	212	50	15	14	563	273	340			627	287	408	-	61
-	**40-200 B**	132	100	160	180	100	70	265	212	50	15	14	552	273	340	65	40	627	287	408	-	68
-	**40-200 A1**	112	100	160	180	100	70	265	212	50	15	14	563	273	340			627	287	408	-	67
-	**40-200 A**	132	100	160	180	100	70	265	212	50	15	14	552	273	340			627	287	408	-	74,5
-	**40-200 AP**	132	100	160	180	100	70	265	212	50	15	14	590	273	340			666	346	471	-	87
-	**40-250 C**	132	100	180	225	125	95	320	250	65	15	14	590	322	405			666	346	471	-	94
-	**40-250 B**	132	100	180	225	125	95	320	250	65	15	14	590	322	405			666	346	471	-	97,5
-	**40-250 A1**	132	100	180	225	125	95	320	250	65	15	14	634	322	405			810	354	480	-	103
-	**40-250 A**	160	100	180	225	125	95	320	250	65	15	14	670	322	405			810	354	480	-	126
-	**40-250 BM**	132	100	180	225	125	95	320	250	65	15	14	670	332	405			810	354	480	-	143,5
-	**40-250 AM**	160	100	180	225	125	95	320	250	65	15	14	670	332	405			810	354	480	-	154
50-125 B	**-**	100	100	132	160	100	70	240	190	50	12	14	530	250	292			602	263	395	49	-
-	**50-125 B**	100	100	132	160	100	70	240	190	50	12	14	530	250	292			602	263	395	-	44,5
50-125 A	**-**	112	100	132	160	100	70	240	190	50	12	14	575	250	292			602	263	395	57,5	-
-	**50-125 A**	100	100	132	160	100	70	240	190	50	12	14	530	250	292			602	263	395	-	49,5
-	**50-160 B1**	112	100	160	180	100	70	265	212	50	12	14	564	270	340			627	287	408	-	61
-	**50-160 B**	132	100	160	180	100	70	265	212	50	12	14	553	270	340	65	50	627	287	408	-	67,5
-	**50-160 A1**	112	100	160	180	100	70	265	212	50	12	14	564	270	340			627	287	408	-	67
-	**50-160 A**	132	100	160	180	100	70	265	212	50	12	14	553	270	340			627	287	408	-	73,5
-	**50-200 C**	132	100	160	200	100	70	265	215	50	12	14	596	290	360			666	346	471	-	91,5
-	**50-200 B**	132	100	160	200	100	70	265	215	50	12	14	596	290	360			666	346	471	-	94,5
-	**50-200 A1**	132	100	160	200	100	70	265	215	50	12	14	638	290	360			810	354	480	-	99,5
-	**50-200 A**	160	100	160	200	100	70	265	215	50	12	14	675	290	360			810	354	480	-	122,5

TYPE		MEC	DIMENSIONS (mm)																			
1~	3~		a	h1	h2	m1	m2	n1	n2	b	x	s	C	B	H	DNA	DNM	I	L	M	1~	3~
-	**50-250 C1**	132	100	180	225	125	95	320	250	65	14	14	639	332	405	65	50	810	354	480	-	122,5
-	**50-250 C**	160	100	180	225	125	95	320	250	65	14	14	675	332	405			810	354	480	-	106
-	**50-250 B**	160	100	180	225	125	95	320	250	65	14	14	719	332	405			810	354	480	-	128,5
-	**50-250 A**	160	100	180	225	125	95	320	250	65	14	14	719	332	405			810	354	480	-	144,5
-	**65-125 B1**	112	100	160	180	125	95	280	212	65	14	14	575	280	340	80	65	627	287	408	-	156,5
-	**65-125 B**	132	100	160	180	125	95	280	212	65	14	14	562	280	340			627	287	408	-	61
-	**65-125 A1**	112	100	160	180	125	95	280	212	65	14	14	575	280	340			627	287	408	-	67,5
-	**65-125 A**	132	100	160	180	125	95	280	212	65	14	14	565	280	340			627	287	408	-	66,5
-	**65-160 C**	132	100	160	200	125	95	280	212	65	14	14	596	290	360			666	346	471	-	73,5
-	**65-160 B**	132	100	160	200	125	95	280	212	65	14	14	600	290	360			666	346	471	-	91
-	**65-160 A1**	132	100	160	200	125	95	280	212	65	14	14	639	290	360			810	354	480	-	94
-	**65-160 A**	160	100	160	200	125	95	280	212	65	14	14	675	290	360			810	354	480	-	98
-	**65-200 C1**	132	100	180	225	125	95	320	250	65	14	14	638	330	405			810	354	480	-	123
-	**65-200 C**	160	100	180	225	125	95	320	250	65	14	14	675	330	405			810	354	480	-	103,5
-	**65-200 B**	160	100	180	225	125	95	320	250	65	14	14	719	330	405			810	354	480	-	126,5
-	**65-200 A**	160	100	180	225	125	95	320	250	65	14	14	719	330	405			810	354	480	-	140,5
-	**65-250 B**	180	100	200	250	160	120	360	280	80	16	19	770	370	450			920	420	625	-	153
-	**65-250 A**	180	100	200	250	160	120	360	280	80	16	19	811	370	450			920	420	625	-	193,5
-	**80-160 E**	132	125	180	225	125	95	320	250	65	14	14	621	330	405	100	80	810	354	480	-	217
-	**80-160 D**	132	125	180	225	125	95	320	250	65	14	14	621	330	405			810	354	480	-	97,5
-	**80-160 C1**	132	125	180	225	125	95	320	250	65	14	14	664	330	405			810	354	480	-	102,5
-	**80-160 C**	160	125	180	225	125	95	320	250	65	14	14	700	330	405			810	354	480	-	106,5
-	**80-160 B**	160	125	180	225	125	95	320	250	65	14	14	744	330	405			810	354	480	-	129
-	**80-160 A**	160	125	180	225	125	95	320	250	65	14	14	744	330	405			810	354	480	-	142,5
-	**80-200 B**	180	125	180	250	125	95	345	280	65	16	14	796	355	430			920	420	625	-	156,5
-	**80-200 A**	180	125	180	250	125	95	345	280	65	16	14	835	355	430			920	420	625	-	188,5
-	**100-160 B**	180	125	200	280	160	120	360	280	80	18	18	795	390	480	125	100	920	420	625	-	197
-	**100-160 A**	180	125	200	280	160	120	360	280	80	18	18	836	390	480			920	420	625	-	214

DIMENSIONS (mm)				
DN	D	K	holes	
			n°	Ø
32	140	100	4	18
40	150	110	4	18
50	165	125	4	18
65	185	145	4	18
80	200	160	8	18
100	220	180	8	18
125	250	210	8	18

flanges

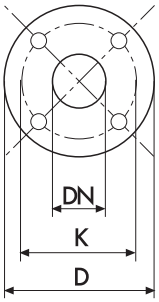

LOTS				
TYPE	TRUCK		CONTAINER	
	PALLET (cm)	N° pumps	PALLET (cm)	N° pumps
32-160	80×120×155	24	80×120×190	30
32-200 C	80×120×155	24	80×120×180	24
32-200 A/B	100×120×140	18	100×120×185	24
32-250 A	85×110×120	6	85×110×170	9
32-250 B/C	80×120×120	6	80×120×170	9
40-125	80×120×155	24	80×120×190	30
40-160	80×120×155	24	80×120×190	30
40-200	100×120×140	18	100×120×185	24
40-250 A	85×110×120	6	85×110×170	9
40-250 B/C	80×120×120	6	80×120×170	9
50-125	80×120×120	24	80×120×180	24
50-160	100×120×140	18	100×120×185	24
50-200 A	85×110×120	6	85×110×170	9
50-200 B/C	80×120×120	6	80×120×170	9
50-250	80×120×120	6	80×120×170	9
65-125	100×120×140	18	100×120×185	24
65-160	85×110×120	6	85×110×170	9
65-200	85×110×120	6	85×110×170	9
65-250	85×110×130	4	85×110×190	6
80-160	85×110×120	6	85×110×170	9
80-200	85×110×130	4	85×110×190	6

MNG-MNGX ~ *EN 733*

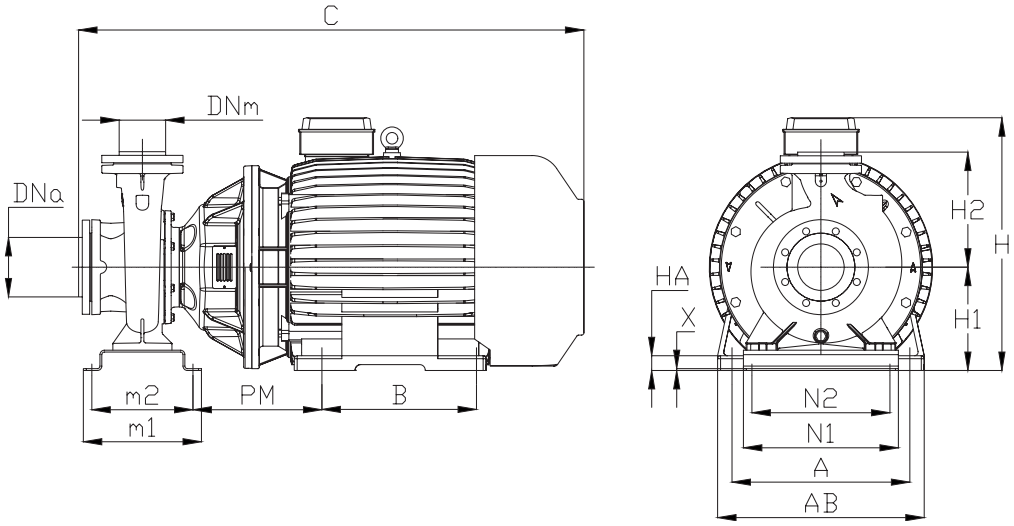

TYPE	DIMENSIONS (mm)																		Kg
	m1	m2	N2	N1	H1	H2	H	A	AB	B	PM	C	HA	DNA	DNA	I	L	M	
80-250B	200	120	315	406	225	317	550	356	435	311	356	1130	28	100	80	655	655	830	440
80-250A	320	280	360	420	280	317	650	406	485	349	325	1240	58			655	655	830	564
100-200B	200	120	280	360	225	321	550	356	435	311	356	1130	28	125	100	655	1400	830	442,5
100-200A	320	280	360	420	280	321	650	406	485	349	325	1240	60			655	1400	830	562
100-250C	320	280	360	420	280	321	675	406	485	349	325	1315	60			655	1400	830	758
100-250B	320	280	360	420	280	321	675	457	545	368	347	1315	35			655	1400	830	760
100-250A	320	280	360	420	280	321	675	457	545	419	347	1370	35			655	1400	830	774

DIMENSIONS (mm)				
DN	D	K	holes	
			n°	Ø
80	200	160	8	18
100	220	180	8	18
125	250	210	8	18

flanges

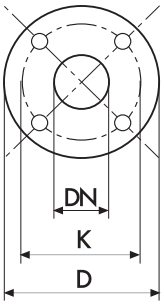

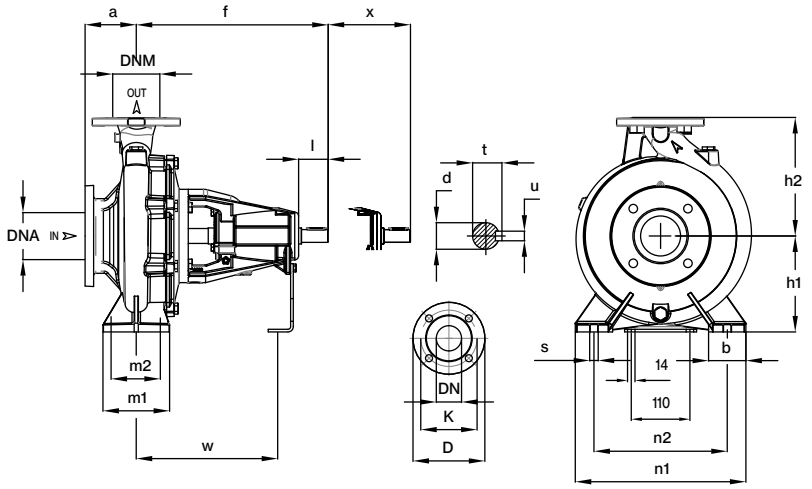

TYPE	DIMENSIONS (mm)																					Kg
	a	f	h1	h2	m1	m2	n1	n2	s	b	l	d1	t	u	x	w	DNA	DNM	l	L	M	
32-160	80	360	132	160	100	70	240	190	14	50	50	24	27	8	100	260	50	32	535	320	445	37,5
32-200	80	360	160	180	100	70	240	190	14	50	50	24	27	8	100	260			535	320	445	40
32-250	100	360	180	225	125	95	320	250	14	65	65	24	27	8	100	260			545	405	545	48,5
40-125	80	360	112	140	100	70	210	160	14	50	50	24	27	8	100	260	65	40	535	320	445	36,5
40-160	80	360	132	160	100	70	240	190	14	50	50	24	27	8	100	260			535	320	445	38,5
40-200	100	360	160	180	100	70	265	212	14	50	50	24	27	8	100	260			535	320	445	42,5
40-250	100	360	180	225	125	95	320	250	14	65	50	24	27	8	100	260			545	405	545	47,5
50-125	100	360	132	160	100	70	240	190	14	50	50	24	27	8	100	260	65	50	535	320	445	39
50-160	100	360	160	180	100	70	265	212	14	50	50	24	27	8	100	260			535	320	445	43
50-200	100	360	160	200	100	70	265	215	14	50	50	24	27	8	100	260			535	320	445	46
50-250	100	360	180	225	125	95	320	250	14	65	50	24	27	8	100	260			545	405	545	52,5
50-315	125	470	225	280	125	95	345	280	14	65	80	32	35,3	10	100	340	80		655	465	620	93
65-125	100	360	160	180	125	95	280	212	14	65	65	24	27	8	100	260	80	65	535	320	445	44,5
65-160	100	360	160	200	125	95	280	212	14	65	65	24	27	8	100	260			535	320	445	48,5
65-200	100	360	180	225	125	95	320	250	14	65	65	24	27	8	140	260			545	405	545	53
65-250	100	470	200	250	160	120	360	280	19	80	80	32	35	10	140	340			545	405	545	76
65-315	125	470	225	280	160	120	400	315	19	80	80	32	35	10	140	340			655	465	620	99,5
80-160	125	360	180	225	125	95	320	250	14	65	50	24	27	8	140	260	100	80	545	405	545	57,5
80-200	125	470	180	250	125	95	345	280	14	65	80	32	35	10	140	340			680	405	545	73
80-250	125	470	200	280	160	120	400	315	18	80	80	32	35,3	10	140	340			655	465	585	89,5
80-315	125	470	250	315	160	120	400	315	18	80	80	32	35,3	10	140	340			655	465	620	106
100-200	125	470	200	280	160	120	360	286	18	80	80	32	35,3	10	140	340	125	100	655	465	620	95
100-250	140	470	225	280	160	120	400	315	18	80	80	32	35,3	10	140	340			655	465	620	103
100-315	140	470	250	315	160	120	400	315	18	80	80	32	35,3	10	140	340			655	465	620	122
100-400	140	530	280	355	200	150	500	400	22	100	110	42	45,3	12	140	370			720	775	855	183,5
125-250	140	470	315	355	200	150	400	315	22	100	110	32	45,3	12	140	370	150	125	655	465	620	132
125-315	140	530	280	355	200	150	500	400	22	100	110	42	45,3	12	140	370			720	775	855	169
125-400	140	530	315	400	200	150	500	400	22	100	110	42	45,3	12	140	370			720	775	855	190,5
150-315	160	530	280	400	200	150	550	450	22	100	110	42	45,3	12	140	370	200	150	655	465	620	186,5
150-400	160	530	315	450	200	150	550	450	22	100	110	42	45,3	12	140	370			720	775	855	214
200-315	180	706	355	450	250	190	634	500	28	134	110	55	58,3	16	208	523	250	200	800	1200	1150	345
200-400	180	706	355	500	250	190	634	500	28	134	110	55	58,3	16	214	523			800	1200	1150	346
250-315	225	711	400	500	250	200	694	560	28	134	110	55	58,3	16	214	528	300	250	800	1200	1070	401,5
250-400	225	706	400	550	250	200	694	560	28	134	110	55	58,3	16	220	523			800	1200	1120	393

DIMENSIONS (mm)				
DN	D	K	holes	
			n°	Ø
32	140	100	4	18
40	150	110	4	18
50	165	125	4	18
65	185	145	4	18
80	200	160	8	18
100	220	180	8	18
125	250	210	8	18
150	285	240	8	23
200	340	295	8	23
250	395	350	12	23
300	445	400	12	23

flanges

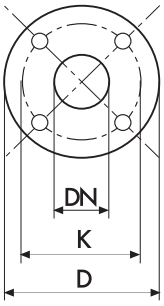

MA-MAX *EN 733* ~ 3500 rpm

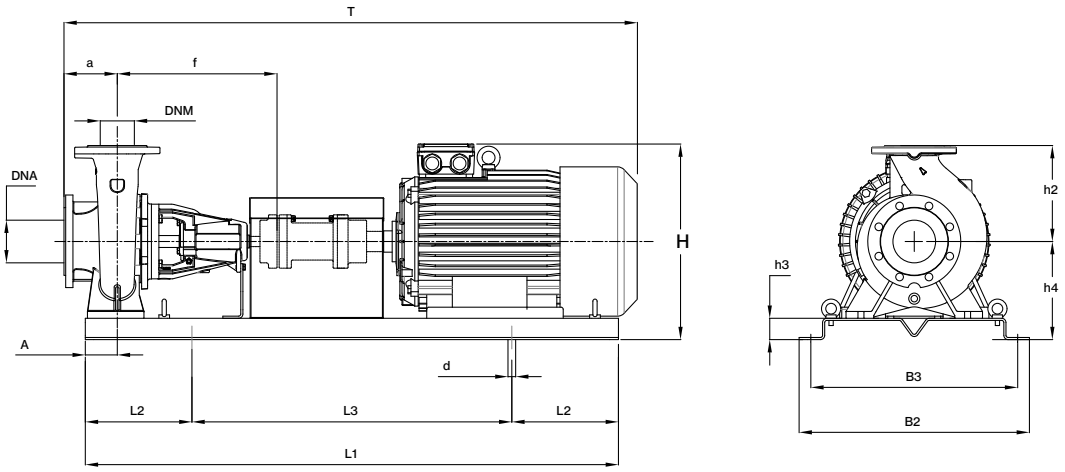

TYPE	kW	Motor Size	DIMENSIONS (mm)																Kg
			a	f	h4	h2	h3	L1	L2	L3	B2	B3	A	d	T	H	DNA	DNM	
32-160C	1,5	90S	80	360	182	160	50	900	150	600	390	350	60	18	855	342			82,1
32-160B	2,2	90L	80	360	182	160	50	900	150	600	390	350	60	18	920	342			87,7
32-160A	3	100L	80	360	182	160	50	900	150	600	390	350	60	18	920	362			96,7
32-200C	4	112M	80	360	210	180	50	900	150	600	390	350	60	18	940	403			108,7
32-200B	5,5	132S	80	360	210	180	50	1000	170	660	450	400	60	22	1020	453	50	32	116,1
32-200B	7,5	132S	80	360	210	180	50	1000	170	660	450	400	60	22	1020	433			144,3
32-200A	7,5	132S	80	360	210	180	50	1000	170	660	450	400	60	22	1020	433			144,3
32-250C	11	160M	100	360	230	225	50	1250	205	840	540	490	75	22	1275	495			207,3
32-250B	11	160M	100	360	230	225	50	1250	205	840	540	490	75	22	1275	495			207,3
32-250A	15	160M	100	360	230	225	50	1250	205	840	540	490	75	22	1275	495			219,3
40-125C	1,5	90S	80	360	162	140	50	900	150	600	390	350	60	18	855	317			82,2
40-125C	2,2	90L	80	360	162	140	50	900	150	600	390	350	60	18	920	317			87,8
40-125B	2,2	90L	80	360	162	140	50	900	150	600	390	350	60	18	920	317			87,8
40-125B	3	100L	80	360	162	140	50	900	150	600	390	350	60	18	920	342			96,8
40-125A	3	100L	80	360	162	140	50	900	150	600	390	350	60	18	920	342			96,8
40-160B	3	100L	80	360	182	160	50	900	150	600	390	350	60	18	920	362			99,8
40-160B	4	112M	80	360	182	160	50	900	150	600	390	350	60	18	940	375			107,8
40-160A	4	112M	80	360	182	160	50	900	150	600	390	350	60	18	940	375			107,8
40-160AP	5,5	132S	80	360	182	160	50	1000	170	660	450	400	60	22	1020	405			115,2
40-200B	5,5	132S	100	360	210	180	50	1000	170	660	450	400	60	22	1040	433	65	40	119,2
40-200B	7,5	132S	100	360	210	180	50	1000	170	660	450	400	60	22	1040	433			147,4
40-200A	7,5	132S	100	360	210	180	50	1000	170	660	450	400	60	22	1040	433			147,4
40-200A	11	160M	100	360	210	180	50	1120	190	740	490	440	60	22	1168	503			198,4
40-200AP	11	160M	100	360	210	180	50	1120	190	740	490	440	60	22	1168	475			198,4
40-250C	11	160M	100	360	230	225	50	1250	205	840	540	490	75	22	1275	523			208,9
40-250B	11	160M	100	360	230	225	50	1250	205	840	540	490	75	22	1275	495			208,9
40-250A	15	160M	100	360	230	225	50	1250	205	840	540	490	75	22	1275	495			220,9
40-250BM	18,5	160L	100	360	230	225	50	1250	205	840	540	490	75	22	1275	495			238,9
40-250AM	22	180M	100	360	230	225	50	1250	205	840	540	490	75	22	1275	530			297,3
50-125B	3	100L	100	360	182	160	50	900	150	600	390	350	60	18	940	342			99,7
50-125A	4	112M	100	360	182	160	50	900	150	600	390	350	60	18	960	342			107,7
50-160B	5,5	132S	100	360	210	180	50	1000	170	660	450	400	60	22	1040	405			119,6
50-160A	7,5	132S	100	360	210	180	50	1000	170	660	450	400	60	22	1040	390			147,8
50-200C	11	160M	100	360	210	200	50	1120	190	740	490	440	60	22	1168	535	65		201,8
50-200B	11	160M	100	360	210	200	50	1120	190	740	490	440	60	22	1168	523			201,8
50-200A	15	160M	100	360	210	200	50	1120	190	740	490	440	60	22	1168	503		50	213,8
50-250C	15	160M	100	360	230	225	50	1250	205	840	540	490	75	22	1275	523			224,8
50-250B	18,5	160L	100	360	230	225	50	1250	205	840	540	490	75	22	1275	495			242,8
50-250A	22	180M	100	360	230	225	50	1250	205	840	540	490	75	22	1275	530			301,2
50-315DN	37	200L	125	470	275	280	50	1400	230	940	610	550	75	26	1455	625			415,0
50-315CN	45	225M	125	470	275	280	50	1400	230	940	610	550	75	26	1500	670	80		465,8
50-315BN	55	250M	125	470	310	280	85	1600	270	1060	660	600	75	26	1650	800			611,8
50-315AN	75	280S	125	470	310	280	85	1800	300	1200	730	670	75	26	1850	870			762,6

TYPE	kW	Motor Size	DIMENSIONS (mm)																Kg
			a	f	h4	h2	h3	L1	L2	L3	B2	B3	A	d	T	H	DNA	DNM	
65-125B	5,5	132S	100	360	210	180	50	1000	170	660	450	400	60	22	1040	390			121,4
65-125B	7,5	132S	100	360	210	180	50	1000	170	660	450	400	60	22	1040	390			149,6
65-125A	7,5	132S	100	360	210	180	50	1000	170	660	450	400	60	22	1040	390			149,6
65-160C	11	160M	100	360	210	200	50	1120	190	740	490	440	60	22	1168	410			205,1
65-160B	11	160M	100	360	210	200	50	1120	190	740	490	440	60	22	1168	503			205,1
65-160A	15	160M	100	360	210	200	50	1120	190	740	490	440	60	22	1168	503			217,1
65-200C	15	160M	100	360	230	225	50	1250	205	840	540	490	75	22	1275	495			227,5
65-200B	18,5	160L	100	360	230	225	50	1250	205	840	540	490	75	22	1275	495	80	65	245,5
65-200B	22	180M	100	360	230	225	50	1250	205	840	540	490	75	22	1290	530			303,3
65-200A	22	180M	100	360	230	225	50	1250	205	840	540	490	75	22	1290	530			303,3
65-250B	30	200L	100	470	250	250	50	1400	230	940	610	550	90	26	1470	600			377,8
65-250A	37	200L	100	470	250	250	50	1400	230	940	610	550	90	26	1470	580			397,8
65-315CN	55	250M	125	470	310	280	85	1600	270	1060	660	600	90	26	1645	760			614,2
65-315BN	75	280S	125	470	310	280	85	1800	300	1200	730	670	90	26	1835	850			765,0
65-315AN	90	280M	125	470	310	280	85	1800	300	1200	730	670	90	26	1835	800			839,2
80-160E	11	160M	125	360	230	225	50	1250	205	840	540	490	75	22	1300	455			220,8
80-160D	11	160M	125	360	230	225	50	1250	205	840	540	490	75	22	1300	455			220,8
80-160C	15	160M	125	360	230	225	50	1250	205	840	540	490	75	22	1300	495			232,8
80-160B	18,5	160L	125	360	230	225	50	1250	205	840	540	490	75	22	1300	495			250,8
80-160A	22	180M	125	360	230	225	50	1250	205	840	540	490	75	22	1315	530	100	80	308,7
80-200B	30	200L	125	470	230	250	50	1400	230	940	610	550	75	26	1495	600			376,7
80-200A	37	200L	125	470	230	250	50	1400	230	940	610	550	75	26	1495	580			396,7
80-250B	45	225M	125	470	250	280	50	1400	230	940	610	550	90	26	1540	630			464,5
80-250A	55	250M	125	470	285	280	85	1600	270	1060	660	600	90	26	1645	760			610,5
100-200D	30	200L	125	470	250	280	50	1400	230	940	610	550	90	26	1500	560			374
100-200C	37	200L	125	470	250	280	50	1400	230	940	610	550	90	26	1500	560			428
100-200B	45	225M	125	470	250	280	50	1400	230	940	610	550	90	26	1540	605			471,5
100-200A	55	250M	125	470	285	280	85	1600	270	1060	660	600	90	26	1645	710			617,5
100-250C	55	250M	140	470	310	280	85	1600	270	1060	660	600	90	26	1660	680	125	100	625,5
100-250C	75	280S	140	470	310	280	85	1800	300	1200	730	670	90	26	1850	735			776,3
100-250B	75	280S	140	470	310	280	85	1800	300	1200	730	670	90	26	1850	825			776,3
100-250A	90	280M	140	470	310	280	85	1800	300	1200	730	670	90	26	1850	800			850,5

4MA-4MAX *EN 733* ~ 1750 rpm

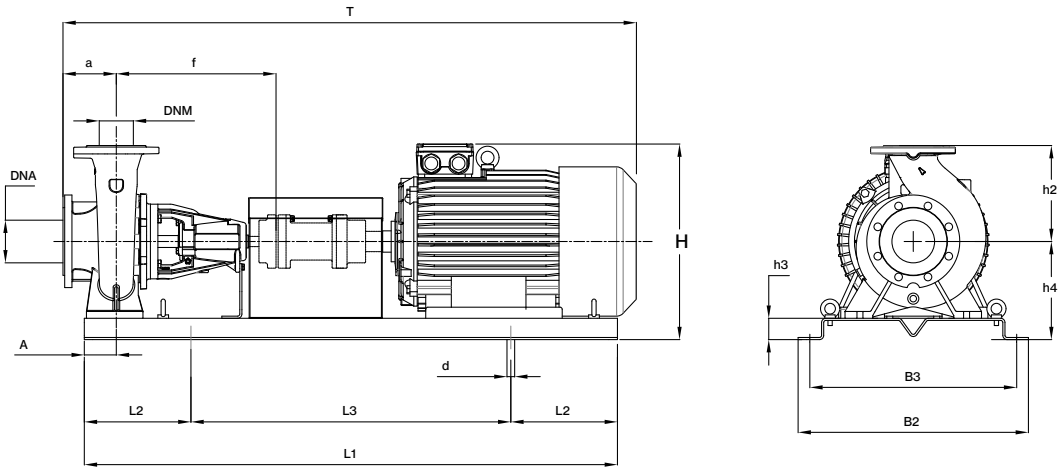

TYPE	kW	Motor Size	DIMENSIONS (mm)																Kg
			a	f	h4	h2	h3	L1	L2	L3	B2	B3	A	d	T	H	DNA	DNM	
32-160C	0,37	71M	80	360	182	160	50	800	130	540	360	320	60	18	820	342			59,4
32-160B	0,37	71M	80	360	182	160	50	800	130	540	360	320	60	18	820	342			59,4
32-160A	0,55	80M	80	360	182	160	50	800	130	540	360	320	60	18	820	342			59,1
32-200C	0,75	80M	80	360	210	180	50	800	130	540	360	320	60	18	820	390			75,1
32-200B	1,1	90S	80	360	210	180	50	800	130	540	360	320	60	18	855	390	50	32	88,1
32-200A	1,1	90S	80	360	210	180	50	800	130	540	360	320	60	18	855	390			88,1
32-250C	1,5	90S	100	360	230	225	50	1000	170	660	450	400	75	22	1025	455			106,7
32-250B	1,5	90S	100	360	230	225	50	1000	170	660	450	400	75	22	1025	455			106,7
32-250A	2,2	100L	100	360	230	225	50	1000	170	660	450	400	75	22	1025	455			112,7
40-125C	0,37	71M	80	360	162	140	50	800	130	540	360	320	60	18	820	302			59,5
40-125B	0,37	71M	80	360	162	140	50	800	130	540	360	320	60	18	820	302			59,5
40-125A	0,55	80M	80	360	162	140	50	800	130	540	360	320	60	18	820	307			59,2
40-160B	0,55	80M	80	360	182	160	50	800	130	540	360	320	60	18	820	342			62,2
40-160A	0,75	80M	80	360	182	160	50	800	130	540	360	320	60	18	820	342			74,2
40-160AP	0,75	80M	80	360	182	160	50	800	130	540	360	320	60	18	820	342			74,2
40-160AP	1,1	90S	80	360	182	160	50	800	130	540	360	320	60	18	855	342	65	40	87,2
40-200B	1,1	90S	100	360	210	180	50	900	150	600	390	350	60	18	940	390			93,8
40-200A	1,1	90S	100	360	210	180	50	900	150	600	390	350	60	18	940	390			93,8
40-200AP	1,1	90S	100	360	210	180	50	900	150	600	390	350	60	18	940	390			93,8
40-200AP	1,5	90S	100	360	210	180	50	900	150	600	390	350	60	18	940	390			98,8
40-250C	1,5	90S	100	360	230	225	50	1000	170	660	450	400	75	22	1025	455			108,3
40-250B	2,2	100L	100	360	230	225	50	1000	170	660	450	400	75	22	1025	455			114,3
40-250A	2,2	100L	100	360	230	225	50	1000	170	660	450	400	75	22	1025	455			114,3
50-125B	0,55	80M	100	360	182	160	50	800	130	540	360	320	60	18	840	342			62,1
50-125A	0,75	80M	100	360	182	160	50	800	130	540	360	320	60	18	840	342			74,1
50-160B	0,75	80M	100	360	210	180	50	800	130	540	360	320	60	18	840	390			78,6
50-160A	1,1	90S	100	360	210	180	50	800	130	540	360	320	60	18	875	390			91,6
50-200C	1,1	90S	100	360	210	200	50	900	150	600	390	350	60	18	940	410	65		97,2
50-200B	1,5	90S	100	360	210	200	50	900	150	600	390	350	60	18	940	410			102,2
50-200A	1,5	90S	100	360	210	200	50	900	150	600	390	350	60	18	940	410		50	102,2
50-250C	2,2	100L	100	360	230	225	50	1000	170	660	450	400	75	22	1025	455			118,2
50-250B	3	100L	100	360	230	225	50	1000	170	660	450	400	75	22	1025	455			122,2
50-250A	4	112M	100	360	230	225	50	1000	170	660	450	400	75	22	1025	455			128,2
50-315C	5,5	132S	125	470	275	280	50	1120	190	740	490	440	75	22	1170	555			200,1
50-315B	7,5	132M	125	470	275	280	50	1120	190	740	490	440	75	22	1200	555	80		186,6
50-315A	11	160M	125	470	275	280	50	1250	205	840	540	490	75	22	1303	555			260,1

TYPE	kW	Motor Size	DIMENSIONS (mm)																Kg
			a	f	h4	h2	h3	L1	L2	L3	B2	B3	A	d	T	H	DNA	DNM	
65-125B	0,75	80M	100	360	210	180	50	800	130	540	360	320	60	18	840	390			80,4
65-125A	1,1	90S	100	360	210	180	50	800	130	540	360	320	60	18	875	390			93,4
65-160C	1,5	90S	100	360	210	200	50	900	150	600	390	350	60	18	940	410			105,5
65-160B	1,5	90S	100	360	210	200	50	900	150	600	390	350	60	18	940	410			105,5
65-160A	2,2	100L	100	360	210	200	50	900	150	600	390	350	60	18	940	410			111,5
65-200C	2,2	100L	100	360	230	225	50	1120	190	740	490	440	75	22	1145	455			124,8
65-200B	3	100L	100	360	230	225	50	1120	190	740	490	440	75	22	1145	455	80	65	128,8
65-200A	3	100L	100	360	230	225	50	1120	190	740	490	440	75	22	1145	455			128,8
65-250B	4	112M	100	470	250	250	50	1120	190	740	490	440	90	22	1130	500			159,0
65-250B	5,5	132S	100	470	250	250	50	1120	190	740	490	440	90	22	1175	500			183,0
65-250A	5,5	132S	100	470	250	250	50	1120	190	740	490	440	90	22	1175	500			183,0
65-315CM	7,5	132M	125	470	275	280	50	1250	205	840	540	490	90	22	1285	555			194,0
65-315BM	11	160M	125	470	275	280	50	1250	205	840	540	490	90	22	1343	555			262,5
65-315AM	11	160M	125	470	275	280	50	1250	205	840	540	490	90	22	1343	555			262,5
80-160E	1,1	90S	125	360	230	225	50	1000	170	660	450	400	75	22	1050	455			115,1
80-160D	1,5	90S	125	360	230	225	50	1000	170	660	450	400	75	22	1050	455			120,1
80-160C	1,5	90S	125	360	230	225	50	1000	170	660	450	400	75	22	1050	455			120,1
80-160B	2,2	100L	125	360	230	225	50	1000	170	660	450	400	75	22	1050	455			126,1
80-160A	3	100L	125	360	230	225	50	1000	170	660	450	400	75	22	1050	455			130,1
80-200B	4	112M	125	470	230	250	50	1120	190	740	490	440	75	22	1170	480	100	80	157,8
80-200A	5,5	132S	125	470	230	250	50	1120	190	740	490	440	75	22	1200	480			181,8
80-250B	5,5	132S	125	470	250	280	50	1250	205	840	540	490	90	22	1285	530			203,8
80-250A	7,5	132M	125	470	250	280	50	1250	205	840	540	490	90	22	1285	530			190,3
80-315B	11	160M	125	470	300	315	50	1250	205	840	540	490	90	22	1343	615			273,8
80-315A	15	160L	125	470	300	315	50	1400	230	940	610	550	90	26	1435	615			305,8
100-200D	4	112M	125	470	250	280	50	1120	190	740	490	440	90	22	1130	480			161,0
100-200C	5,5	132S	125	470	250	280	50	1120	190	740	490	440	90	22	1200	530			185,0
100-200B	5,5	132S	125	470	250	280	50	1120	190	740	490	440	90	22	1200	530			186,0
100-200A	7,5	132M	125	470	250	280	50	1120	190	740	490	440	90	22	1240	530			198,0
100-250E	7,5	132M	140	470	275	280	50	1250	205	840	540	490	90	22	1300	555			205,3
100-250D	7,5	132M	140	470	275	280	50	1250	205	840	540	490	90	22	1300	555			205,3
100-250D	11	160M	140	470	275	280	50	1250	205	840	540	490	90	22	1358	555	125	100	273,8
100-250A	11	160M	140	470	275	280	50	1250	205	840	540	490	90	22	1358	555			273,8
100-315B	15	160L	140	470	300	315	50	1400	230	940	610	550	90	26	1450	615			327,7
100-315A	18,5	180M	140	470	300	315	50	1400	230	940	610	550	90	26	1450	615			348,3
100-400C	22	180L	140	530	365	355	85	1600	270	1060	660	600	110	26	1630	720			469,5
100-400B	30	200L	140	530	365	355	85	1600	270	1060	660	600	110	26	1630	720			540,8
100-400A	37	225S	140	530	365	355	85	1600	270	1060	660	600	110	26	1630	720			554,3
125-250B	11	160M	140	470	300	355	50	1250	205	840	540	490	90	22	1358	655			308,1
125-250A	15	160L	140	470	300	355	50	1400	230	940	610	550	90	26	1450	655			340,1
125-315C	22	180L	140	530	365	355	85	1600	270	1060	660	600	110	26	1630	720			464,4
125-315B	30	200L	140	530	365	355	85	1600	270	1060	660	600	110	26	1630	720	150	125	535,8
125-315A	37	225S	140	530	365	355	85	1600	270	1060	660	600	110	26	1630	720			549,3
125-400C	45	225M	140	530	400	400	85	1600	270	1060	660	600	110	26	1630	800			659,2
125-400B	55	250M	140	530	400	400	85	1600	270	1060	660	600	110	26	1630	800			756,0
125-400A	75	280S	140	530	400	400	85	1800	300	1200	730	670	110	26	1830	805			939,4
150-315D	30	200L	160	530	365	400	85	1800	300	1200	730	670	110	26	1850	765			570,7
150-315C	37	225S	160	530	365	400	85	1800	300	1200	730	670	110	26	1850	765			584,2
150-315B	45	225M	160	530	365	400	85	1800	300	1200	730	670	110	26	1850	765			672,1
150-315A	55	250M	160	530	365	400	85	1800	300	1200	730	670	110	26	1850	765	200	150	768,9
150-400C	75	280S	160	530	400	450	85	1800	300	1200	730	670	110	26	1850	850			951,4
150-400B	75	280S	160	530	400	450	85	1800	300	1200	730	670	110	26	1850	850			962,8
150-400A	90	280M	160	530	400	450	85	1800	300	1200	730	670	110	26	1850	850			1057,8

MN Serie-Mechanical seal and bearings

MECHANICAL SEAL	PUMP MODEL	SHAFT Ø		STANDARD MATERIAL	OPTIONAL			
					E	V	2E	2V
	32-160, 40-125	20mm	***Rotating face***	Ceramic	Ceramic	-	SiC	SiC
			Stationary face	Graphite	Graphite	-	SiC	SiC
			Elastomer	NBR	EPDM	-	EPDM	FKM
	40-250M	28mm	***Rotating face***	Ceramic	-	-	SiC	SiC
			Stationary face	Graphite	-	-	SiC	SiC
			Elastomer	EPDM	-	-	EPDM	FKM
	32-200, 32-250, 40-160, 40-200, 40-250, 50-125, 50-160, 50-200, 50-250, 65-125, 65-160, 65-200, 80-160	28mm	***Rotating face***	Ceramic	Ceramic	Ceramic	SiC	SiC
			Stationary face	Graphite	Graphite	Graphite	SiC	SiC
			Elastomer	NBR	EPDM	FKM	EPDM	FKM
	65-250, 80-200, 100-160	40mm	***Rotating face***	CrNi-steel	CrNi-steel	CrNi-steel	SiC	SiC
			Stationary face	Graphite	Graphite	Graphite	SiC	SiC
			Elastomer	NBR	EPDM	FKM	EPDM	FKM

BEARINGS	PUMP MODEL	TYPE	
	32-200C, 40-160B, 40-160A, 50-125B, 50-125A	6204-ZZ	6206-ZZ C3
	32-160C, 32-160B, 32-160A, 40-125C, 40-125B, 40-125A	6205-ZZ C3	6203-ZZ
	1~ 32-200C, 32-200B1, 32-200B, 32-200A1, 32-200A, 32-250C, 32-250B, 1~ 40-160A, 40-160AP, 40-200B1, 40-200B, 40-200A1, 40-200A, 40-200AP, 40-250C, 40-250B, 1~ 50-125A, 50-160B1, 50-160B, 50-160A1, 50-160A, 50-200C, 50-200B, 65-125B1, 65-125B, 65-125A1, 65-125A, 65-160C, 65-160B, 80-160E, 80-160D	6206-ZZ C3	6306-ZZ C3
	32-250A1, 40-250A1, 50-200A1, 50-200C1, 65-160A1, 65-200C1, 80-160C1	6308-ZZ C3	6306-ZZ C3
	32-250A, 40-250A, 40-250BM, 40-250AM, 50-200A, 50-250C, 50-250B, 50-250A, 65-160A, 65-200C, 65-200B, 65-200A, 80-160C, 80-160B, 80-160A	6308-ZZ C3	6309-ZZ C3
	65-250B, 65-250A, 80-200B, 80-200A, 100-160B, 100-160A	6309-ZZ C3	6310-ZZ C3

MNG Serie-Mechanical seal and bearings

MECHANICAL SEAL	PUMP MODEL	SHAFT Ø		STANDARD MATERIAL	OPTIONAL			
					E	V	2E	2V
	80-250, 100-200, 100-250	45mm	***Rotating face*** ***Stationary face*** ***Elastomer***	CrNi-steel Graphite NBR	CrNi-steel Graphite EPDM	CrNi-steel Graphite FKM	SiC SiC EPDM	SiC SiC FKM

MOTOR BEARINGS	PUMP MODEL	TYPE	
	80-250, 100-200	6313-ZZ C3	6313-ZZ C3
	80-250, 100-200, 100-250	6314-ZZ C3	6314-ZZ C3

MA-4MA Serie-Mechanical seal and bearings

MECHANICAL SEAL	PUMP MODEL	SHAFT Ø		STANDARD MATERIAL	OPTIONAL			
					E	V	2E	2V
	32-160, 40-125	20mm	***Rotating face*** ***Stationary face*** ***Elastomer***	Ceramic Graphite NBR	Ceramic Graphite EPDM	- - -	SiC SiC EPDM	SiC SiC FKM
	40-250M	28mm	***Rotating face*** ***Stationary face*** ***Elastomer***	Ceramic Graphite EPDM	- - -	- - -	SiC SiC EPDM	SiC SiC FKM
	32-200, 32-250, 40-160, 40-200, 40-250, 50-125, 50-160, 50-200, 50-250, 65-125, 65-160, 65-200, 80-160	28mm	***Rotating face*** ***Stationary face*** ***Elastomer***	Ceramic Graphite NBR	Ceramic Graphite EPDM	Ceramic Graphite FKM	SiC SiC EPDM	SiC SiC FKM
	50-315, 65-250, 65-315M, 80-200, 80-315, 100-315	40mm	***Rotating face*** ***Stationary face*** ***Elastomer***	CrNi-steel Graphite NBR	CrNi-steel Graphite EPDM	CrNi-steel Graphite FKM	SiC SiC EPDM	SiC SiC FKM
	50-315N, 65-315N, 80-315N	40mm	***Rotating face*** ***Stationary face*** ***Elastomer***	Graphite SiC FKM	Graphite SiC EPDM	- - -	- - -	- - -
	80-250, 100-200, 100-250, 125-250	45mm	***Rotating face*** ***Stationary face*** ***Elastomer***	CrNi-steel Graphite NBR	CrNi-steel Graphite EPDM	CrNi-steel Graphite FKM	SiC SiC EPDM	SiC SiC FKM
	100-400, 125-315, 125-400, 150-315, 150-400	55mm	***Rotating face*** ***Stationary face*** ***Elastomer***	Graphite SiC FKM	- - -	- - -	SiC SiC EPDM	SiC SiC FKM
	200-315, 200-400, 250-315, 250-400	70mm	***Rotating face*** ***Stationary face*** ***Elastomer***	Graphite SiC FKM	- - -	- - -	SiC SiC EPDM	SiC SiC FKM

PUMP BEARINGS	PUMP MODEL	TYPE	
	32-160, 32-200, 32-250, 40-125, 40-160, 40-200, 40-250, 40-250M, 50-125, 50-160, 50-200, 50-250, 65-125, 65-160, 65-200, 80-160	6306-ZZ C3	6306-ZZ C3
	50-315, 65-250, 65-315, 80-200, 80-315, 100-315	3208-ZZ C3	3208-ZZ C3
	50-315N, 65-315N, 80-250, 80-315N, 100-200, 100-250, 125-250	6209-ZZ C3	6309-ZZ C3
	100-400, 125-315, 125-400, 150-315, 150-400	6211-ZZ C3	6311-ZZ C3
	200-315, 200-400, 250-315, 250-400, 250-400	6313-ZZ C3	6313-ZZ C3

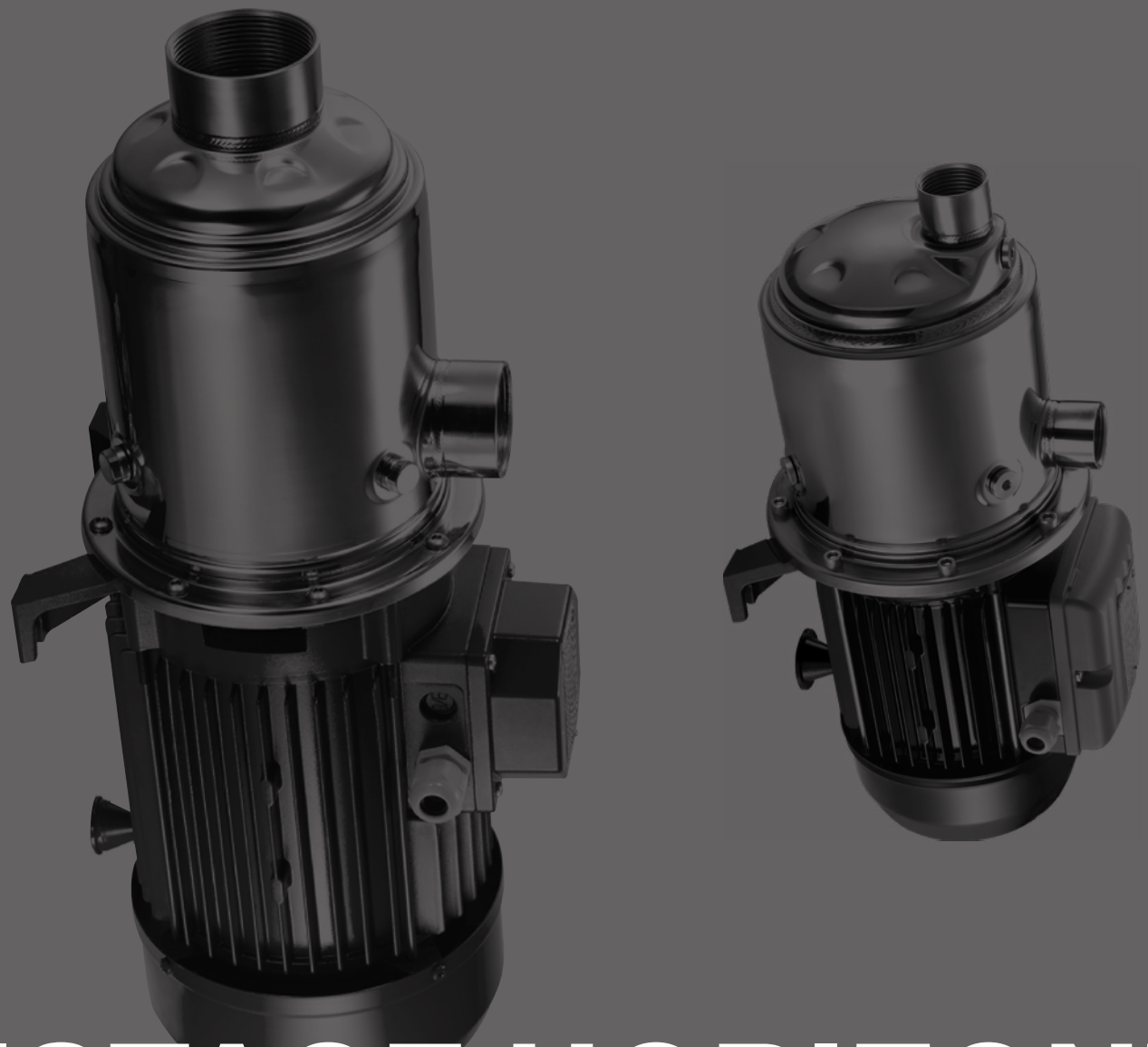

MULTISTAGE HORIZONTAL

MULTISTAGE HORIZONTAL PUMPS

PLUS 3/PLUS 3S

PLUS 5/PLUS 5S

PLUS 7/PLUS 7S

PLUS 9/PLUS 9S

PLUS 18/PLUS 18S

Range of horizontal multistage pumps, not self-priming, with axial suction and radial delivery threads, pump body in AISI 304 and hydraulic part in Noryl (PLUS) and in AISI 304 (PLUS S).

Applications:

- Handling of uncharged liquids
- For pressurization systems
- Irrigation
- Drinking water treatment
- Food industry
- Heating and conditioning
- Industrial washing systems

MULTISTAGE

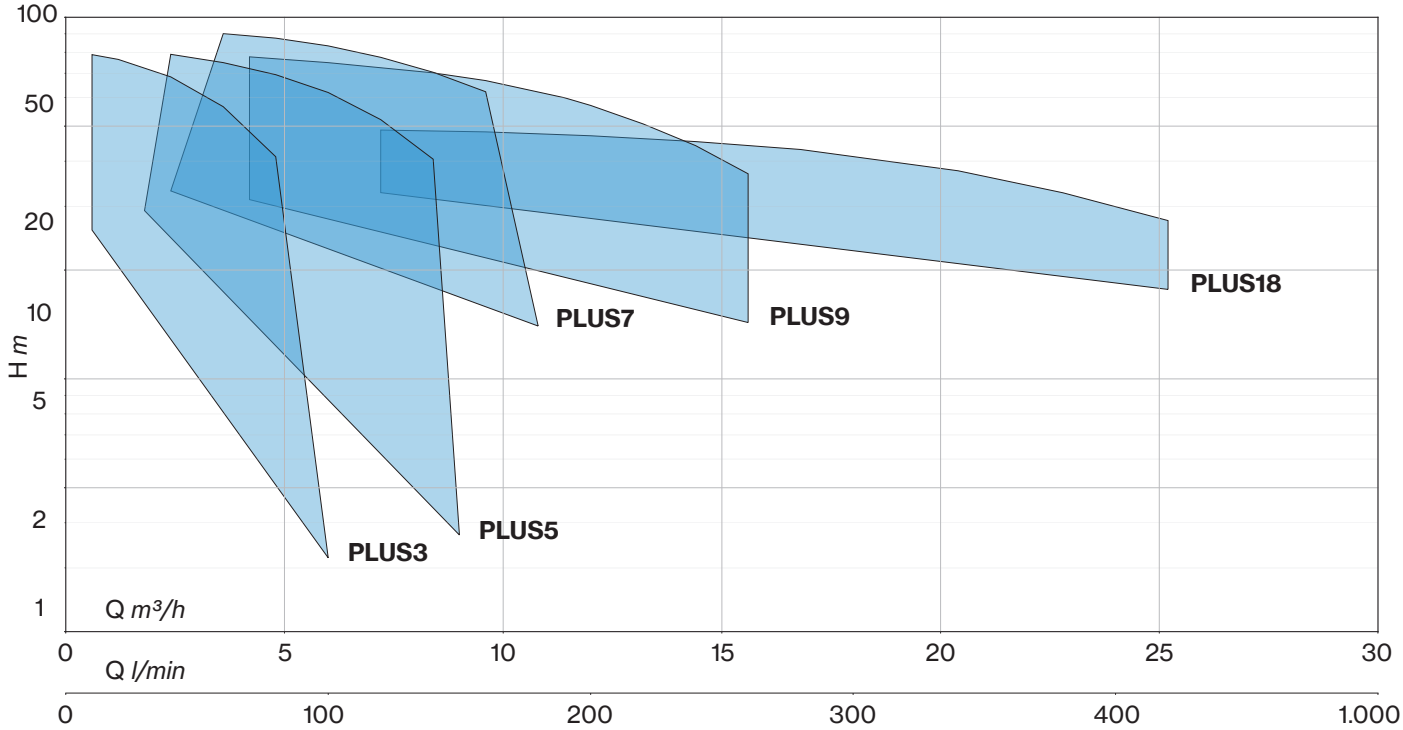
100
50
20
10
5
2
1
H m
PLUS3
PLUS5
PLUS7
PLUS9
PLUS18
Q m³/h
0
5
10
15
20
25
30
Q l/min
0
100
200
300
400
1.000

PLUS

Multistage Horizontal

PLUS 3

PLUS 5

PLUS 7

PLUS 9

PLUS 18

Stainless steel multistage horizontal pumps. Pumping of clean non-loaded fluids, pressurizing system, irrigation, drinking and glycol water, water treatment, heating and air conditioning, washing system.

Construction features	
Pump body, mechanical seal housing	stainless steel AISI 304
Motor bracket	aluminum
Impellers, diffusers	Noryl®
Mechanical seal	ceramic-graphite-EPDM ≤ 4 impellers graphite-silicon carbide-EPDM ≥ 5 impellers
Motor shaft	stainless steel AISI 303
Liquid temperature	-5 ÷ +35 °C
Operating pressure	max 8,5 bar

Motor	
2 poles induction motor	3~ 220/380V - 60Hz 1~ 220V - 60Hz (with thermal protection up to 1,85 kW)
Insulation class	F
Protection degree	IPX4

P 3 -70 / 6 T -WR

- pump type: P
- nominal flow-rate m³/h: 3
- No. of impellers: 6
- motor: 1~ / T 3~
- certification: standard / -WR WRAS approved
- mech. seal: standard / -2 Sic-Sic

WRAS APPROVED PRODUCT
CERTIFICATION MARK

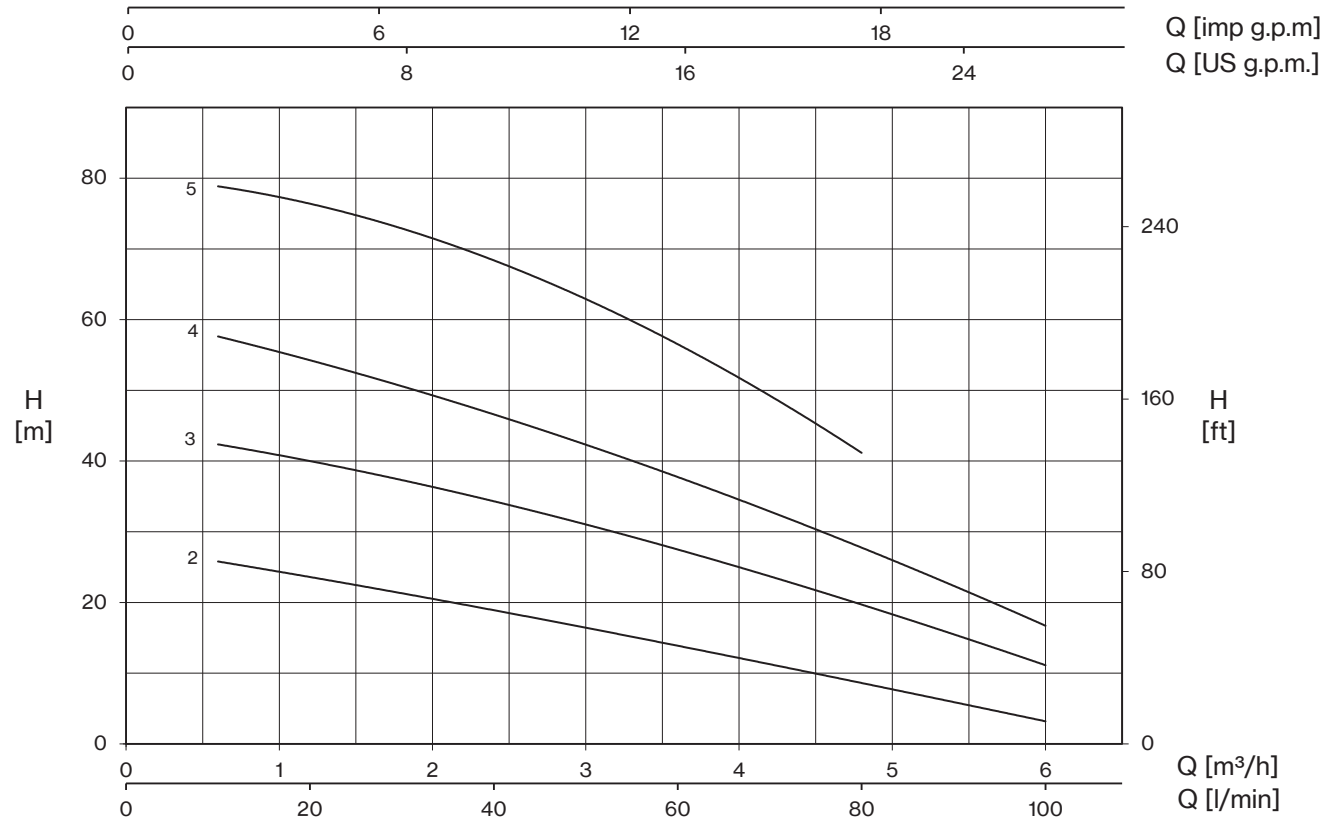

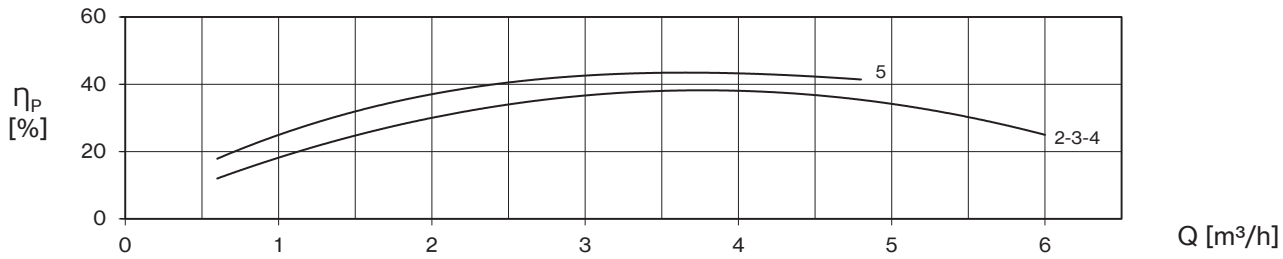

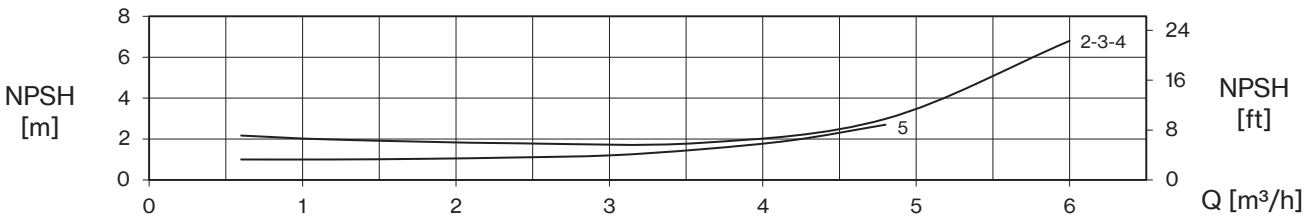

TYPE - 60 Hz		P2		P1		CURRENT		Q (m³/h - l/min)						
1~	3~			1~	3~	1~ 220V	3~ 380V	0	0,6	1,2	2,4	3,6	4,8	6
								0	10	20	40	60	80	100
		HP	kW	kW		A		H (m)						
P 3-70/2	**P 3-70/2T**	0,7	0,51	0,71	0,6	3,4	1,0	27,8	25,8	23,6	18,9	13,9	8,6	3,2
P 3-80/3	**P 3-80/3T**	0,8	0,6	1,08	0,96	5,1	1,7	44,4	42,3	40,1	34,3	27,4	19,8	11,1
P 3-120/4	**P 3-120/4T**	1,2	0,9	1,44	1,37	6,8	2,7	60,5	57,6	54,3	46,6	37,7	27,8	16,7
P 3-150/5	**P 3-150/5T**	1,8	1,3	1,6	1,5	7,5	3,3	79,2	78,8	76,5	68,4	56,6	41,2	

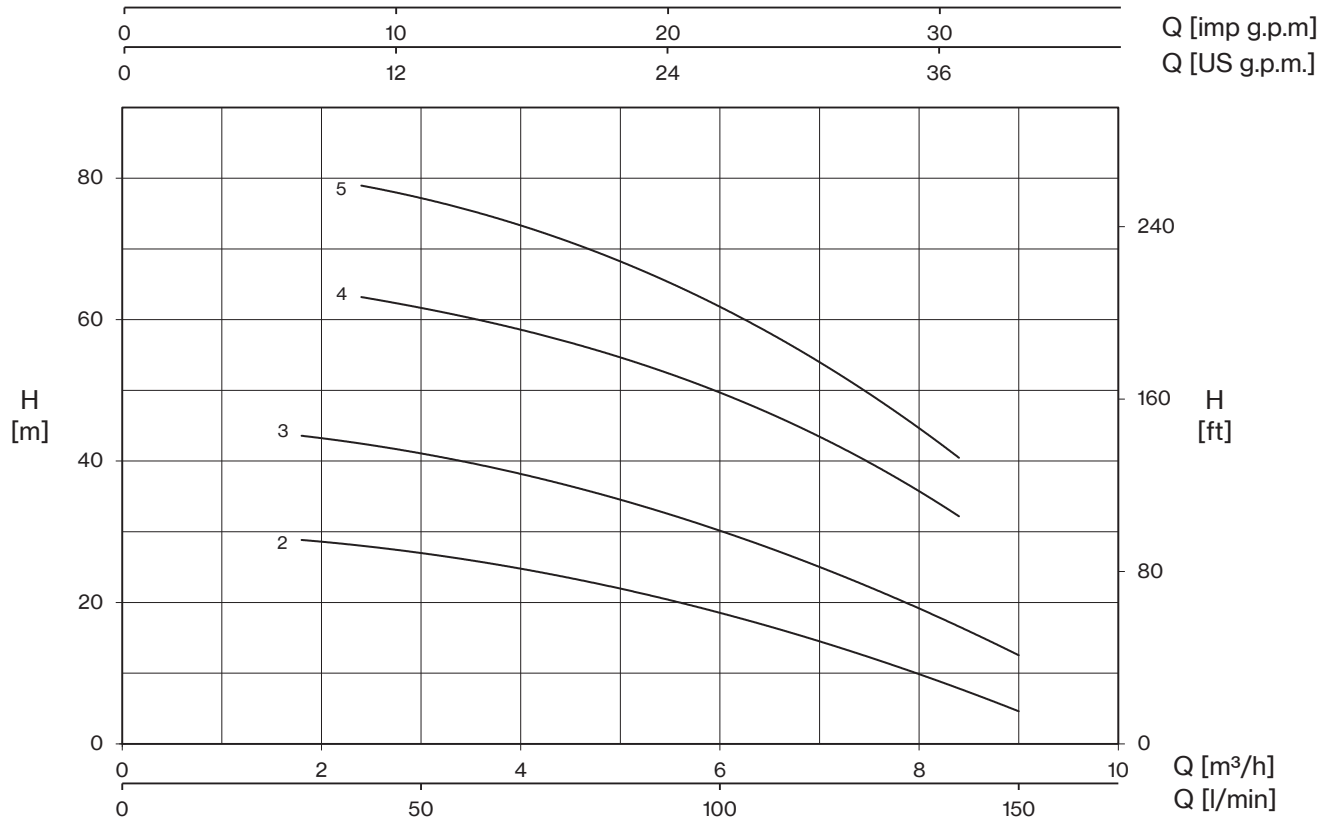

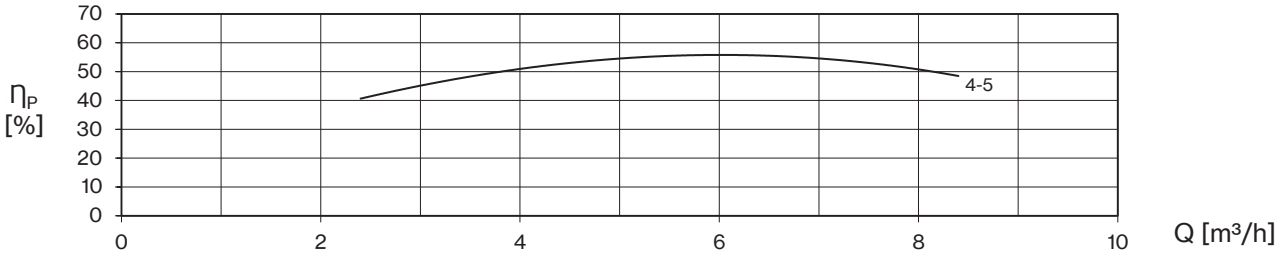

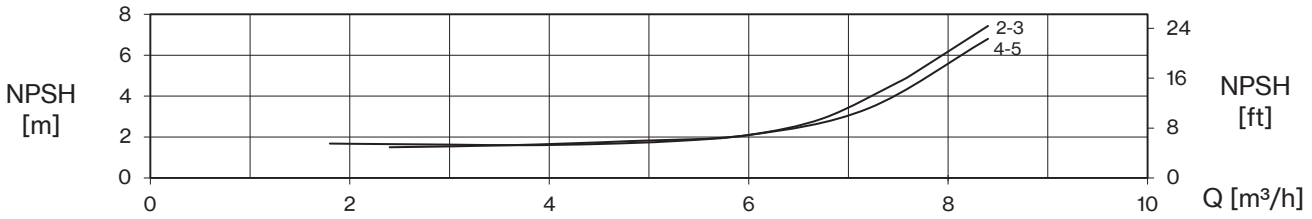

TYPE - 60 Hz		P2		P1		CURRENT		Q (m³/h - l/min)								
1~	3~			1~	3~	1~ 220V	3~ 380V	0	1,8	2,4	3,6	4,8	6	7,2	8,4	9
								0	30	40	60	80	100	120	140	150
		HP	kW	kW		A		H (m)								
P 5-90/2	**P 5-90/2T**	0,9	0,66	0,98	0,94	4,6	1,7	31,9	29,2	28,0	25,3	22,2	18,5	14,3	8,6	3,7
P 5-120/3	**P 5-120/3T**	1,2	0,9	1,42	1,35	6,7	2,7	47,0	44,0	42,5	38,9	34,7	30,1	24,9	17,6	11,3
P 5-180/4	**P 5-180/4T**	1,8	1,3	1,9	1,8	9,1	3,6	66,0		63,2	59,9	55,5	49,8	42,0	32,2	
P 5-250/5	**P 5-250/5T**	2,5	1,84	2,4	2,2	11,1	4,3	82,9		79,0	74,9	69,4	61,9	52,1	40,5	

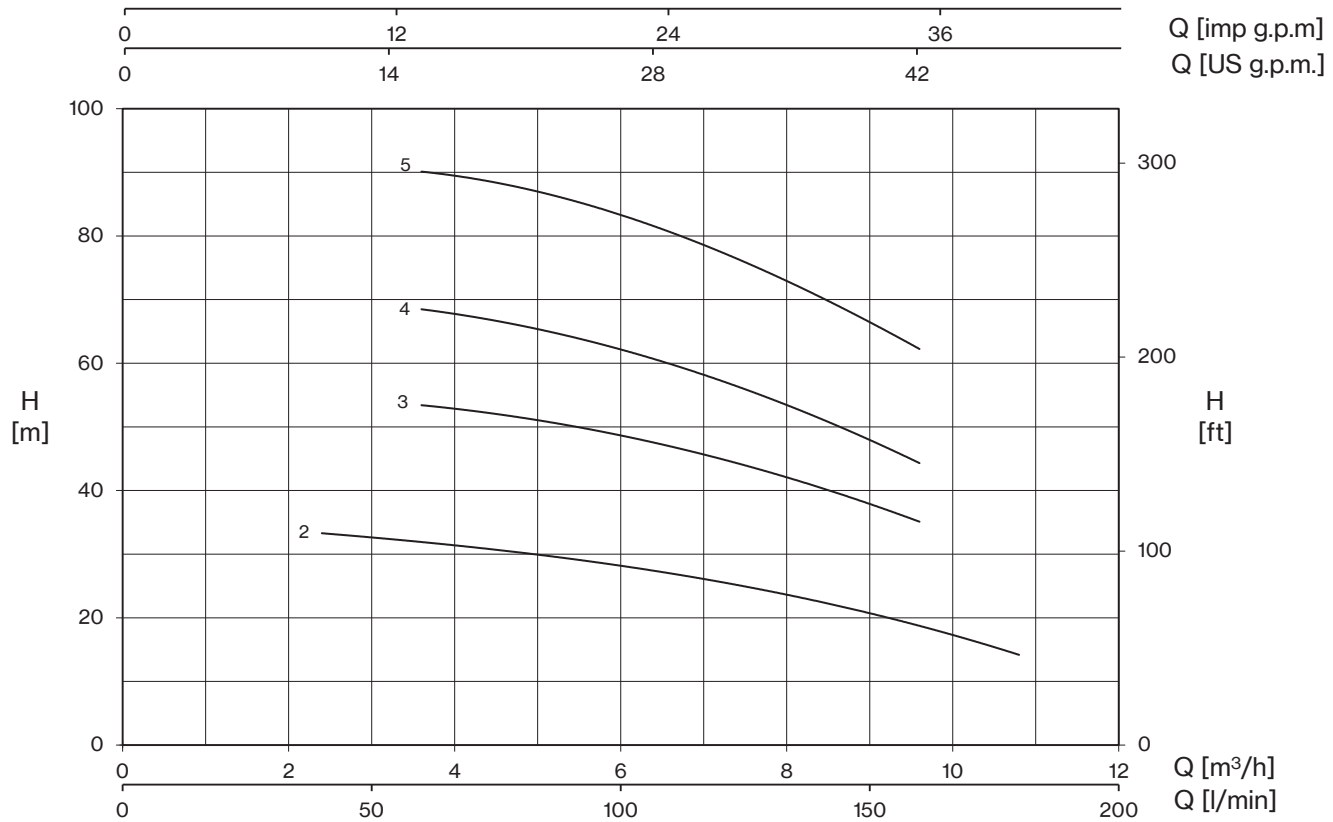

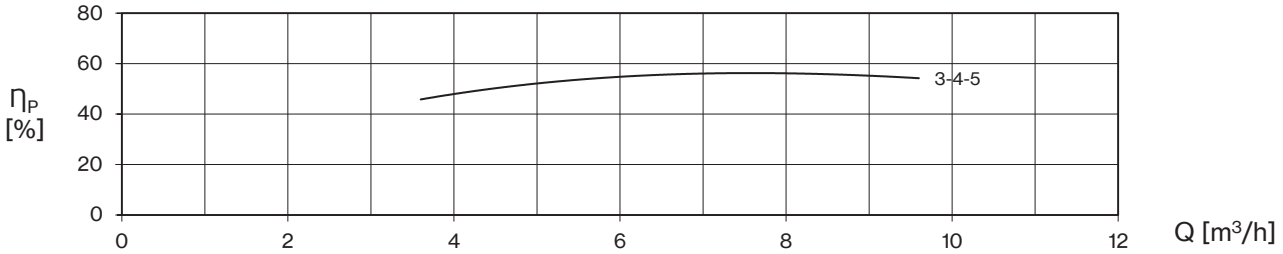

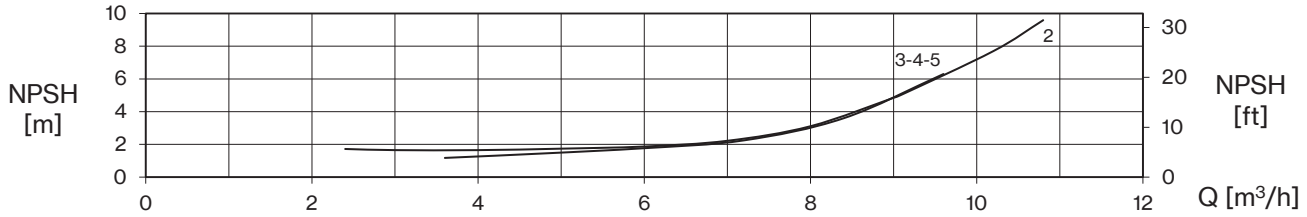

TYPE - 60 Hz		P2		P1		CURRENT		Q (m³/h - l/min)								
1~	3~			1~	3~	1~ 220V	3~ 380V	0	2,4	3,6	4,8	6	7,2	8,4	9,6	10,8
								0	40	60	80	100	120	140	160	180
		HP	kW	kW		A		H (m)								
P 7-120/2	**P 7-120/2T**	1,2	0,9	1,50	1,4	7,1	2,7	35,2	33,1	32,3	30,2	28,0	25,5	22,5	19,1	14,0
P 7-200/3	**P 7-200/3T**	2,5	1,84	2,2	2,0	10,4	4,0	54,9		53,4	51,5	48,7	44,9	40,6	35,1	
P 7-300/4	**P 7-300/4T**	3	2,2	2,9	2,6	14,5	5,1	71,1		68,5	65,9	62,2	57,3	51,4	44,3	
-	**P 7-400/5T**	4	3	-	3,4	-	6,5	91,3		90,1	87,6	83,3	77,5	70,5	62,2	

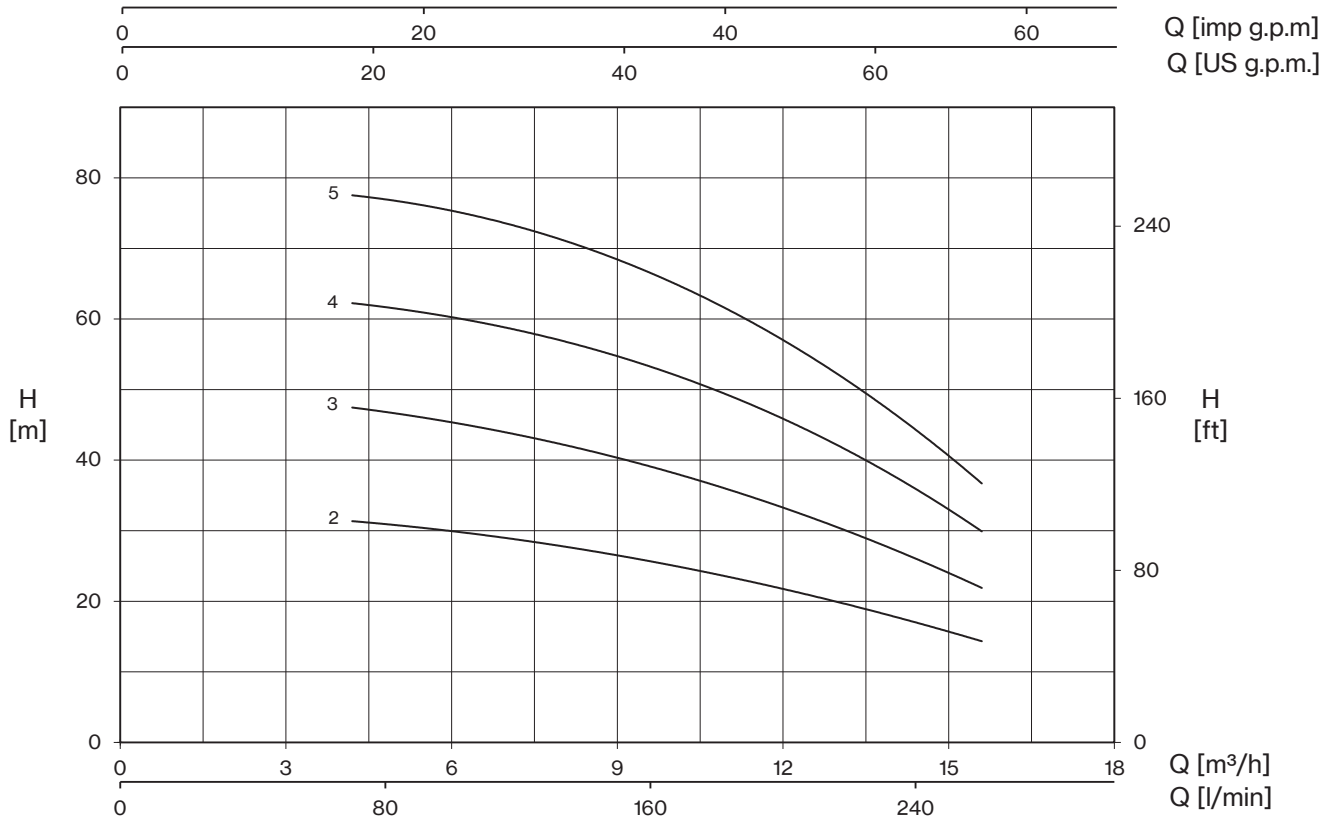

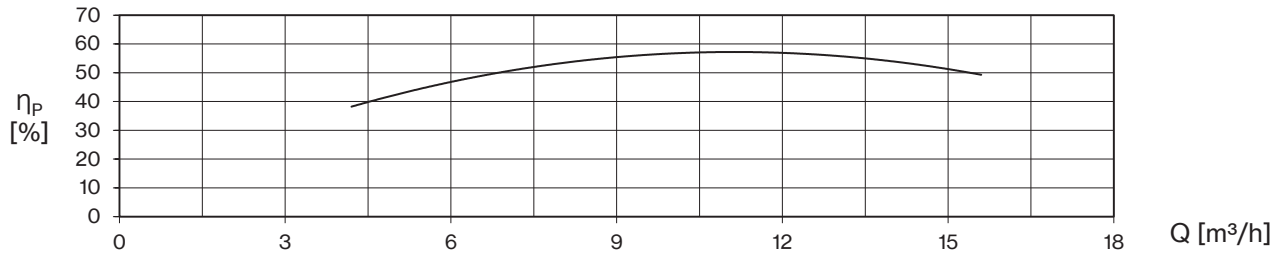

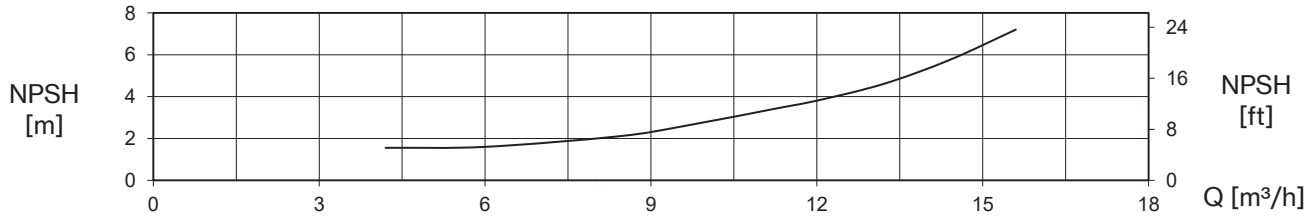

TYPE - 60 Hz		P2		P1		CURRENT		Q (m³/h - l/min)									
1~	3~			1~	3~	1~ 220V	3~ 380V	0	4,2	6	8,4	9,6	11,4	12	13,2	14,4	15,6
								0	70	100	140	160	190	200	220	240	260
		HP	kW	kW		A		H (m)									
P 9-180/2	**P 9-180/2T**	1,8	1,3	1,6	1,5	7,7	3,3	33,0	31,3	30,0	27,2	25,7	22,8	21,8	19,5	17,0	14,3
P 9-200/3	**P 9-200/3T**	2,5	1,84	2,4	2,2	11,1	4,3	50,5	47,5	45,3	41,4	39,2	35,0	33,3	29,7	26,0	22,0
P 9-350/4	**P 9-350/4T**	3,5	2,57	3,2	3,1	15,8	5,9	67,0	62,3	60,1	56,1	53,4	48,2	45,9	41,0	35,8	30,0
-	**P 9-400/5T**	4	3	-	3,7	-	7,0	83,6	77,7	74,9	70,2	66,8	59,9	57,0	50,7	44,2	36,9

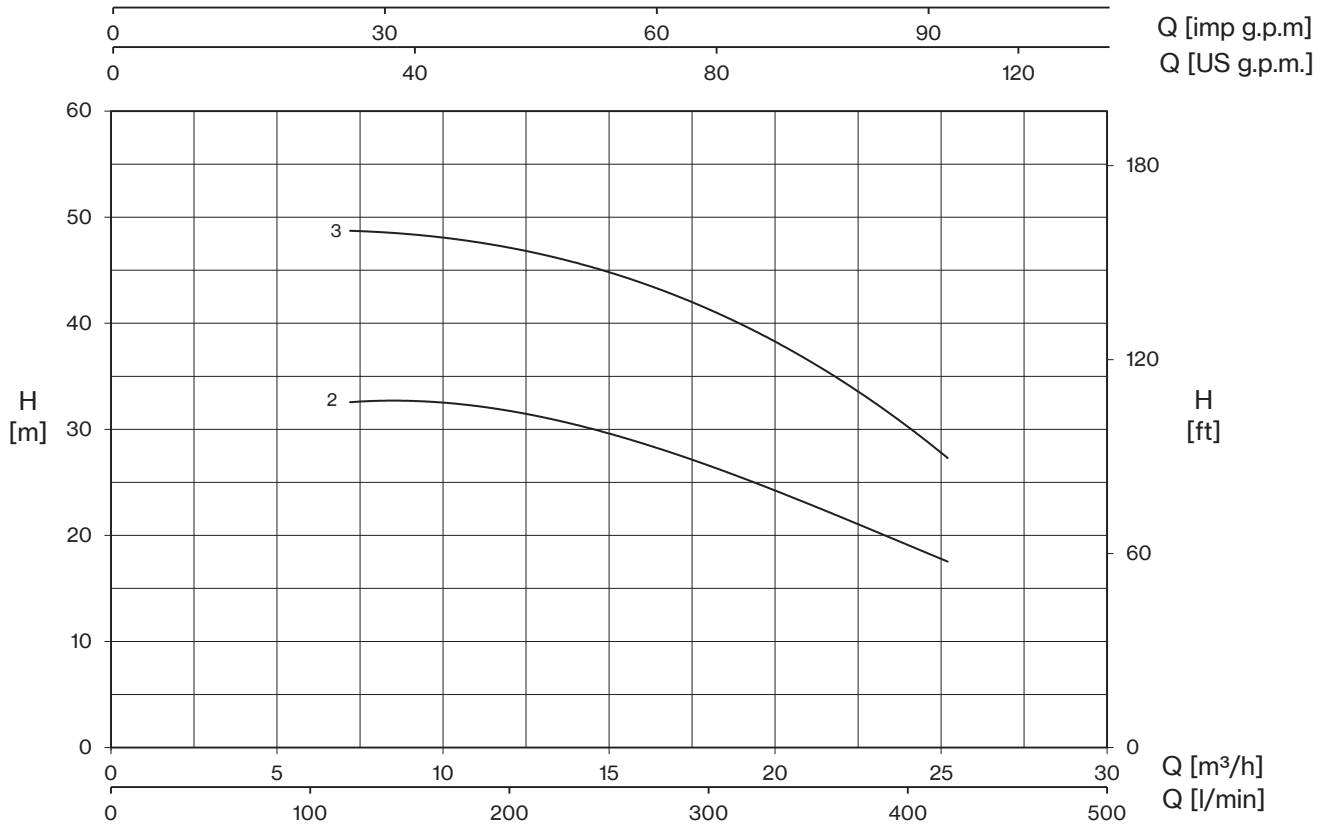

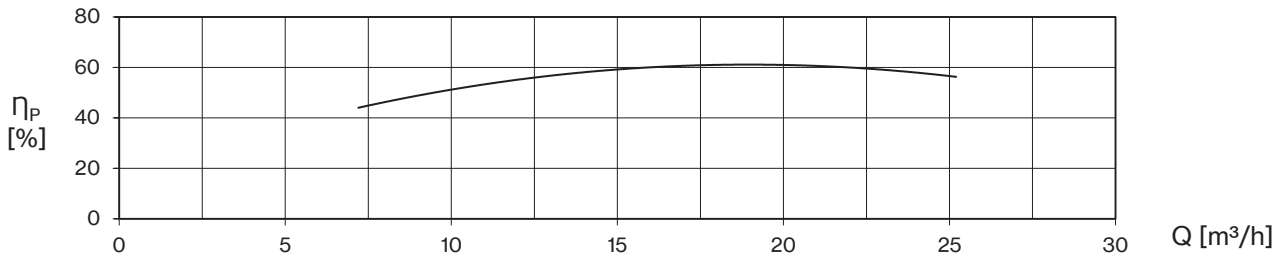

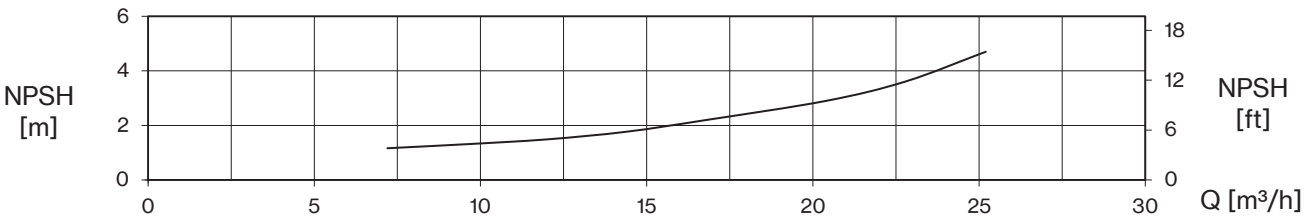

TYPE - 60 Hz	P2		P1	CURRENT	Q (m³/h - l/min)								
3~				3~ 380V	0	7,2	9,6	12	14,4	16,8	20,4	22,8	25,2
					0	120	160	200	240	280	340	380	420
	HP	kW	kW	A	H (m)								
P 18-250/2T	3	2,2	2,6	5,1	34,3	32,7	32,3	31,7	30,2	28,2	23,6	20,4	17,7
P 18-400/3T	4,5	3,37	3,9	7,3	50,8	48,8	48,2	47,0	45,3	43,1	37,6	32,7	27,4

PLUS

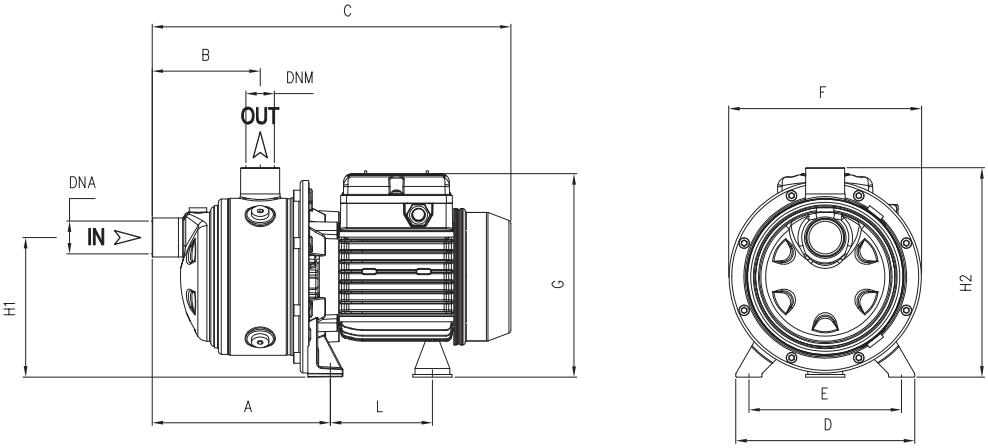

TYPE		DIMENSIONS (mm)															Kg	
1~	3~	A	B	C	D	E	F	G	L	H1	H2	DNA	DNM	I	L	M	1~	3~
P 3-70/2	**P 3-70/2T**	166,8	103	333	164	140	176	190	93,7	128	192	1" G	1" G	369	189	220	7	7
P 3-80/3	**P 3-80/3T**	166,8	103	356	164	140	176	203	104,7	128	192			444	189	220	9,5	9,5
P 3-120/4	**P 3-120/4T**	190,8	127	380	164	140	176	203	104,7	128	192			444	189	220	11	11
P 3-150/5	**P 3-150/5T**	214,8	151	465	164	140	176	211	128,2	134	198			529	189	240	17,5	17,5
P 5-90/2	**P 5-90/2T**	166,8	103	333	164	140	176	190	93,7	128	192			369	189	220	8	8
P5-120/3	**P 5-120/3T**	166,8	103	356	164	140	176	203	104,7	128	192			444	189	220	10,5	10,5
P 5-180/4	**P 5-180/4T**	190,8	127	441	164	140	176	211	128,2	134	198			529	189	240	16	17
P 5-250/5	**P 5-250/5T**	214,8	151	465	164	140	176	211	128,2	134	198			529	189	240	17,5	16,5

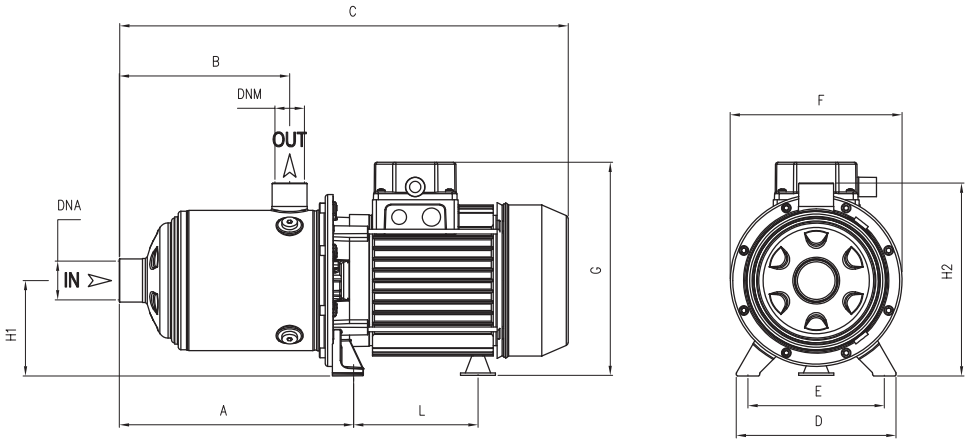

TYPE		DIMENSIONS (mm)															Kg	
1~	3~	A	B	C	D	E	F	G	L	H1	H2	DNA	DNM	I	L	M	1~	3~
P 7-120/2	**P 7-120/2T**	166,8	103	356	164	140	176	203	104,7	92	192	1" ¼ G	1" G	444	189	220	10,5	10,5
P 7-200/3	**P 7-200/3T**	166,8	103	417	164	140	176	211	128,2	98	198			529	189	240	16	16
P 7-300/4	**P 7-300/4T**	190,8	127	495 T 441	164	140	176	229 T 211	148,2 T 128,2	103 T 98	203 T 198			580 529	231 189	235 240	24	17
P 7-400/5	**P 7-400/5T**	214,8	151	519	164	140	176	229	148,2	103	203			580	231	235	24	24
P 9-180/2	**P 9-180/2T**	185,8	118	436	164	140	176	211	128,2	98	198	1" ½ G	1" ¼ G	529	189	240	16	16,5
P 9-200/3	**P 9-200/3T**	185,8	118	436	164	140	176	211	128,2	98	198			529	189	240	17	16
P 9-350/4	**P 9-350/4T**	215,8	148	520	164	140	176	229	148,2	103	203			580	231	235	24	21
-	**P 9-400/5T**	245,8	178	550	164	140	176	229	148,2	103	203			580	231	235	-	24
-	**P 18-250/2T**	201	141	462	164	140	176	211	128,2	98	198	2" G	1" ½ G	529	189	240	-	16,5
-	**P 18-400/3T**	238,5	141	516	164	140	176	229	148,2	103	203			529	189	240	-	23,5

1~ 110V - 60Hz	
TYPE	I (A)
P3-70/2	6,8
P3-80/3	10,2
P3-120/4	13,6
P5-90/2	9,2
P5-120/3	13,4
P7-120/2	14,2

LOTS				
TYPE	TRUCK		CONTAINER	
	PALLET (cm)	N° pumps	PALLET (cm)	N° pumps
P 3-70/2(T)	80×120×150	84	80×120×175	96
P 3-80/3(T)÷120/4(T)	85×110×160	70	85×110×185	80
P 3-150/5(T)	90×110×150	48	90×110×170	56
P 5-90/2(T)	80×120×150	84	80×120×175	96
P 5-120/3(T)	85×110×160	70	85×110×185	80
P 5-180/4(T)÷250/5(T)	90×110×150	48	90×110×170	56
P 7-120/2(T)	85×110×160	70	85×110×185	80
P 7-200/3(T)÷300/4(T)	90×110×150	48	90×110×170	56
P 7-400/5T	80x120x150	42	80x120x175	49
P 9-180/2(T)÷200/3(T)	90×110×150	48	90×110×170	56
P 9-350/4(T)÷400/5T	80x120x150	42	80x120x175	49
P 18-250/2T÷400/3T	90×110×150	48	90×110×170	56

PLUS S

Multistage Horizontal

PLUS 3S

PLUS 5S

PLUS 7S

PLUS 9S

PLUS 18S

Stainless steel multistage horizontal pumps. Pumping of clean non-loaded fluids, pressurizing system, irrigation, drinking and glycol water, water treatment, heating and air conditioning, washing system.

Construction features	
Pump body, mechanical seal housing	stainless steel AISI 304
Motor bracket	aluminum
Impellers, diffusers	stainless steel AISI 304
Mechanical seal	ceramic-graphite-EPDM ≤ 4 impellers graphite-silicon carbide-EPDM ≥ 5 impellers
Motor shaft	stainless steel AISI 303
Liquid temperature	-15 ÷ +110 °C
Operating pressure	max 8,5 bar

Motor	
2 poles induction motor	3~ 220/380V - 60Hz 1~ 220V - 60Hz (with thermal protection up to 1,85 kW)
Insulation class	F
Protection degree	IPX4

P 3 S - 70 / 2 T -WR

- pump type
- nominal flow-rate m³/h
- stainless steel hydraulic part
- No. of impellers
- motor: 1~ / T 3~
- certification: standard / -WR WRAS approved
- mech. seal: standard / -2 Sic-Sic

WRAS APPROVED PRODUCT
CERTIFICATION MARK

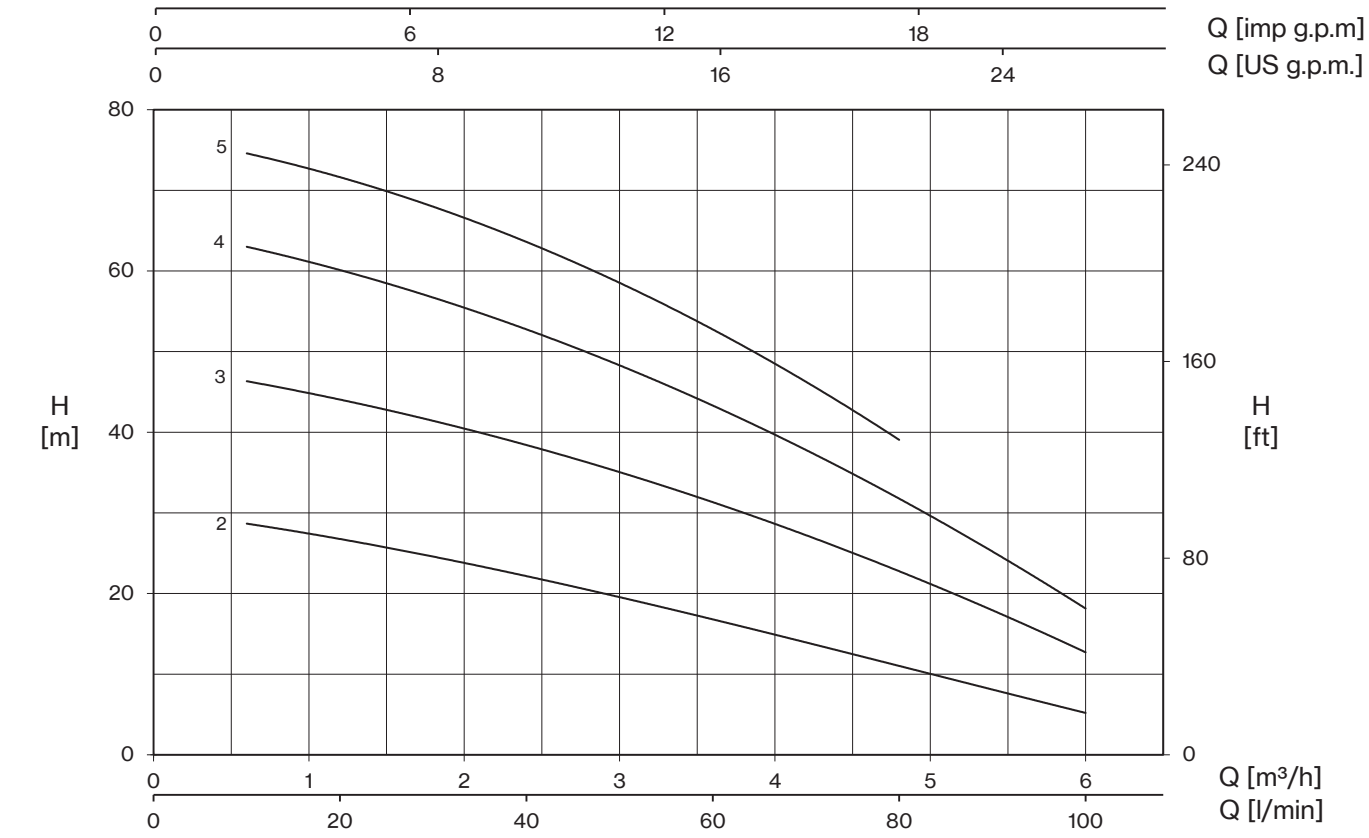

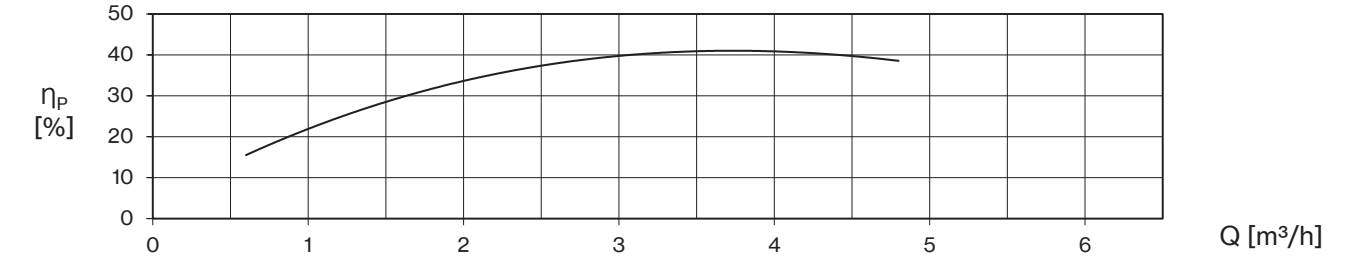

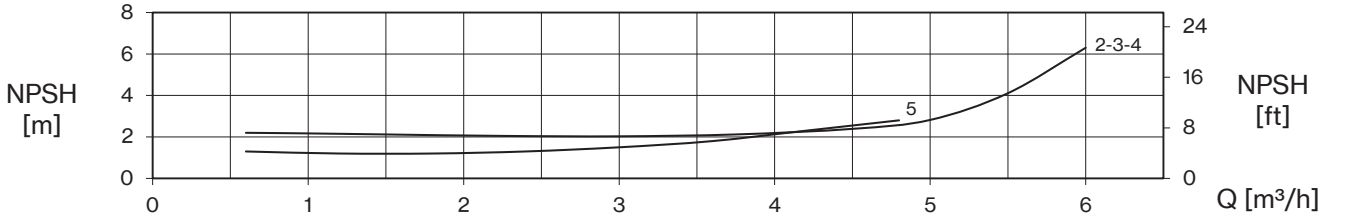

TYPE - 60 Hz		P2		P1		CURRENT		Q (m³/h - l/min)						
1~	3~			1~	3~	1~ 220V	3~ 380V	0	0,6	1,2	2,4	3,6	4,8	6
								0	10	20	40	60	80	100
		HP	kW	kW		A		H (m)						
P 3S-70/2	**P 3S-70/2T**	0,7	0,51	0,65	0,57	3,0	1,0	30,3	28,7	26,7	22,2	16,8	11,0	5,2
P 3S-80/3	**P 3S-80/3T**	0,8	0,6	0,95	0,86	4,6	1,6	47,0	46,3	44,1	38,4	31,3	22,8	12,7
P 3S-120/4	**P 3S-120/4T**	1,2	0,9	1,27	1,21	6,0	2,5	64,6	62,9	60,3	52,7	43,2	31,9	18,1
P 3S-150/5	**P 3S-150/5T**	1,8	1,3	1,6	1,6	7,7	3,4	76,9	74,8	71,5	63,4	52,8	38,8	

PLUS 5S

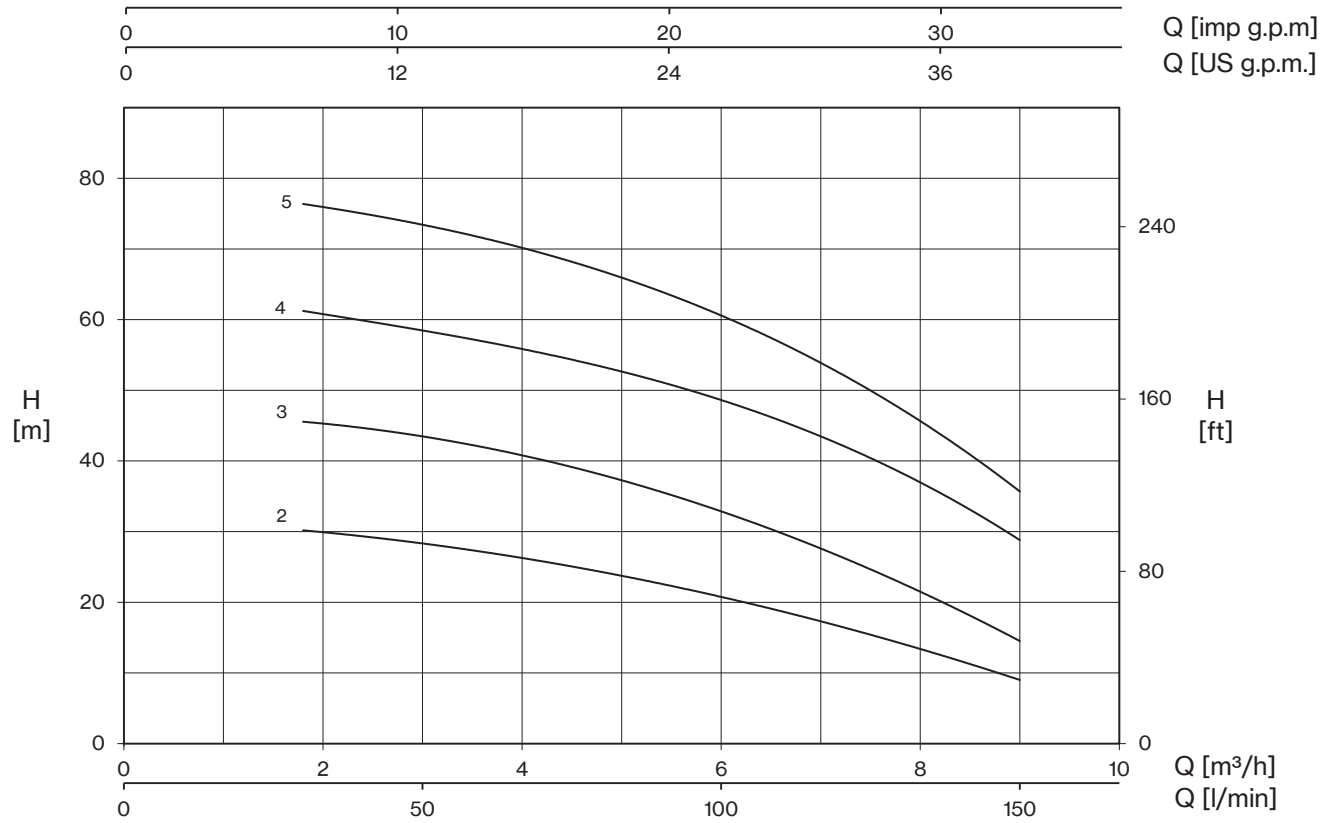

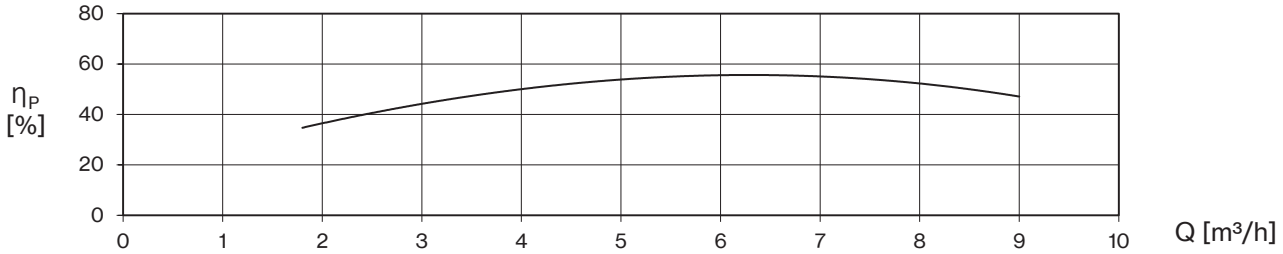

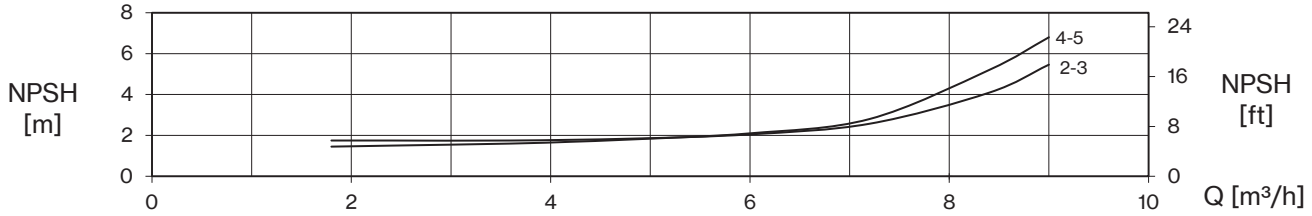

TYPE - 60 Hz		P2		P1		CURRENT		Q (m³/h - l/min)								
1~	3~			1~	3~	1~ 220V	3~ 380V	0	1,8	2,4	3,6	4,8	6	7,2	8,4	9
								0	30	40	60	80	100	120	140	150
		HP	kW	kW		A		H (m)								
P 5S-90/2	**P 5S-90/2T**	0,9	0,66	0,95	0,92	4,4	1,7	32,6	30,4	29,3	26,9	24,1	20,7	17,0	12,1	8,5
P 5S-120/3	**P 5S-120/3T**	1,2	0,9	1,37	1,30	6,4	2,6	49,4	46,1	44,6	41,4	37,4	32,8	27,3	20,5	12,8
P 5S-180/4	**P 5S-180/4T**	1,8	1,3	1,9	1,8	8,9	3,6	64,3	61,1	60,0	57,0	53,1	48,3	42,4	34,2	28,6
P 5S-250/5	**P 5S-250/5T**	2,5	1,84	2,4	2,2	11,1	4,3	80,2	76,4	74,9	71,2	66,5	60,5	52,4	41,9	35,7

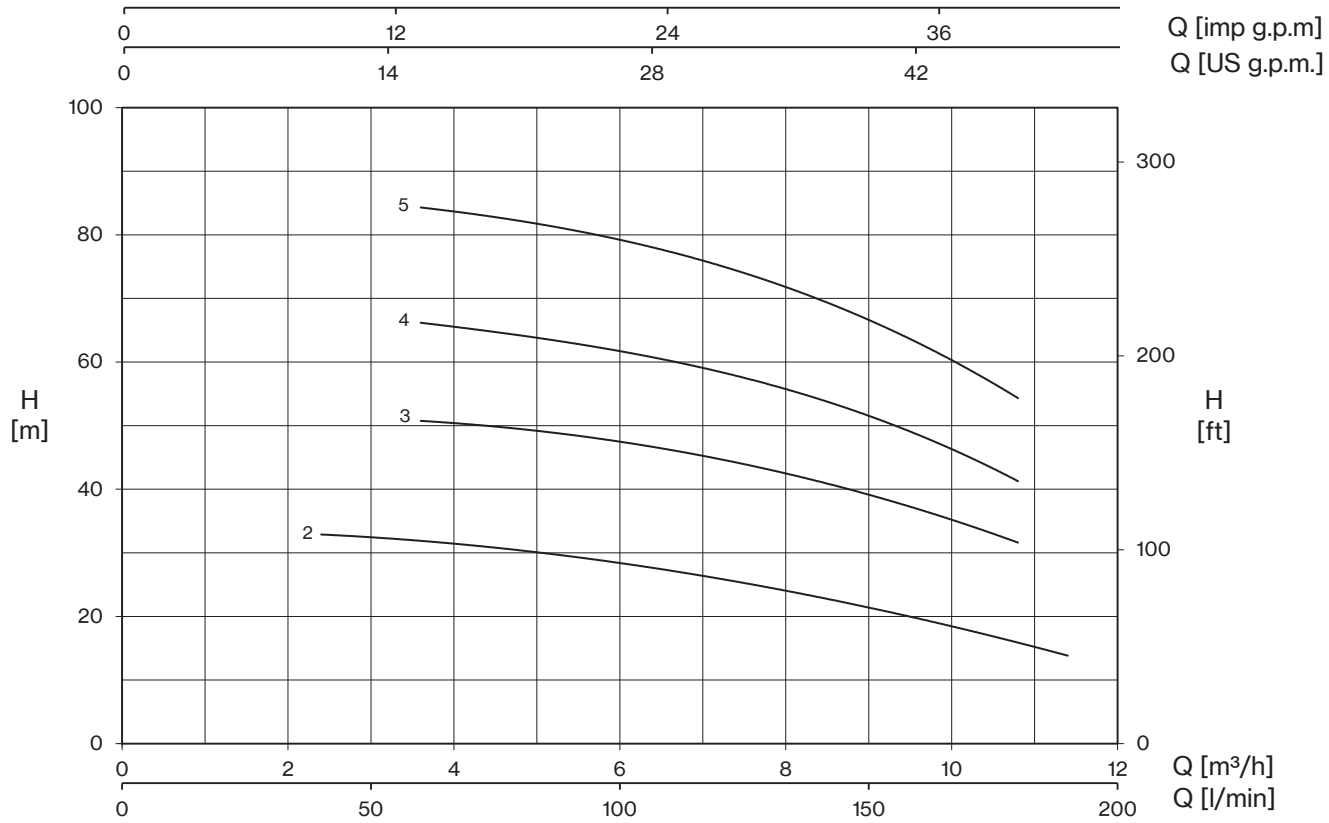

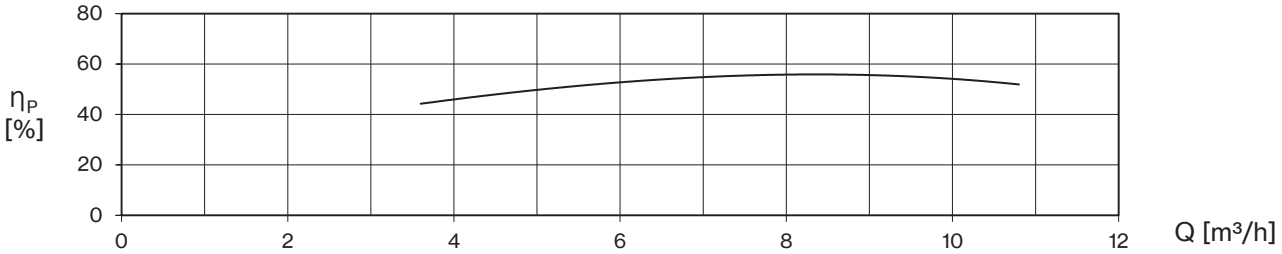

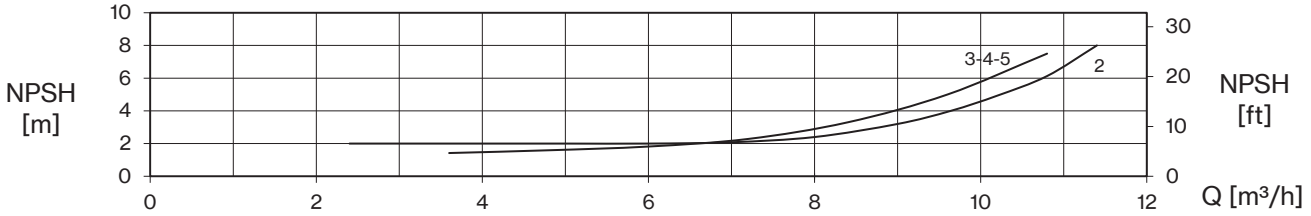

TYPE - 60 Hz		P2		P1		CURRENT		Q (m³/h - l/min)									
1~	3~			1~	3~	1~ 220V	3~ 380V	0	2,4	3,6	4,8	6	7,2	8,4	9,6	10,8	11,4
								0	40	60	80	100	120	140	160	180	190
		HP	kW	kW		A		H (m)									
P 7S-120/2	**P 7S-120/2T**	1,2	0,9	1,46	1,39	6,9	2,7	34,2	32,8	32,0	30,5	28,3	25,8	23,0	19,8	16,0	13,7
P 7S-200/3	**P 7S-200/3T**	2,5	1,84	2,3	2,1	10,8	4,1	51,7		50,7	49,5	47,5	44,7	41,2	36,9	31,6	
P 7S-300/4	**P 7S-300/4T**	3	2,2	3,0	2,8	15,1	5,3	67,3		66,1	64,4	61,7	58,3	54,2	48,7	41,2	
-	**P 7S-400/5T**	4	3	-	3,5	-	6,8	85,1		84,3	82,3	79,1	75,2	69,9	62,9	54,3	

PLUS 9S

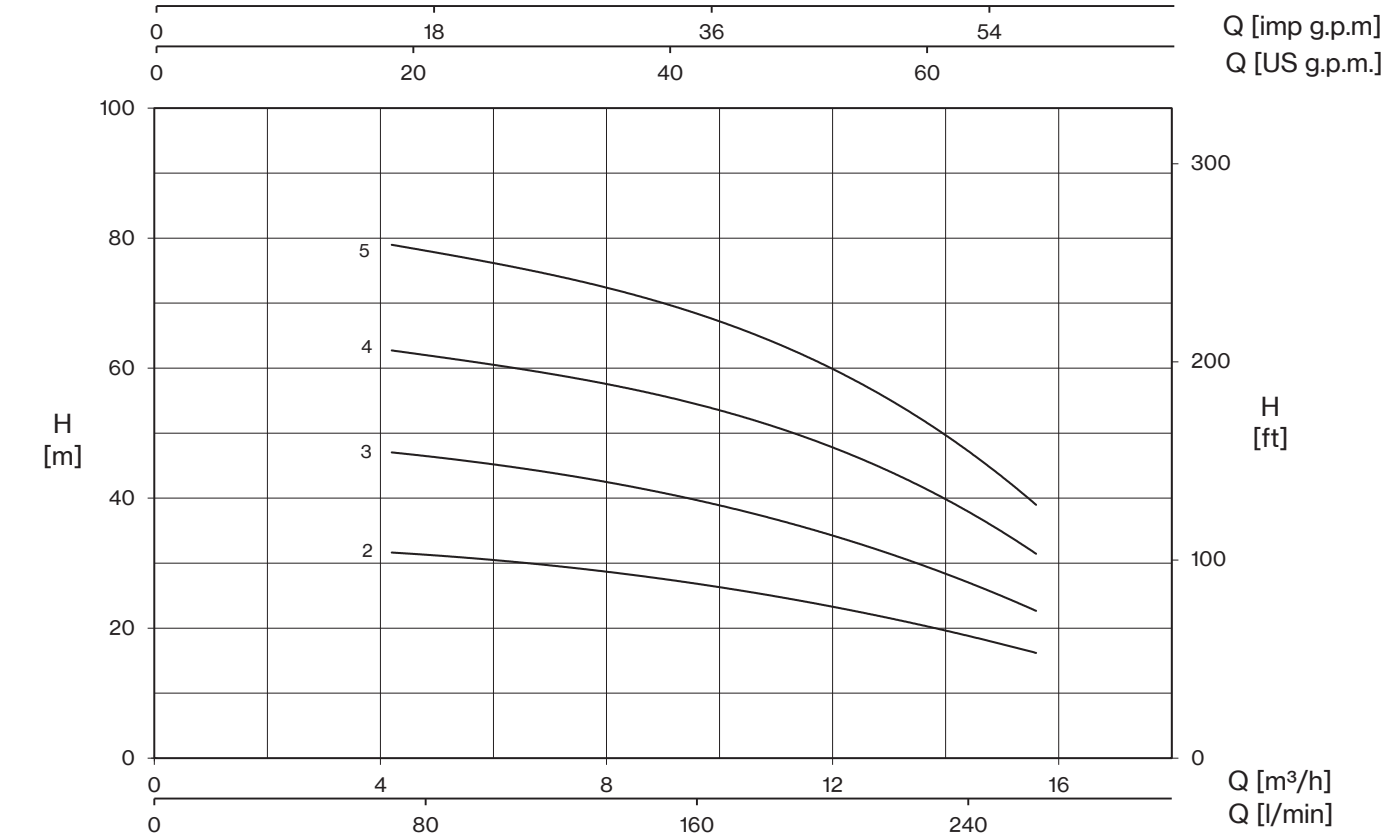

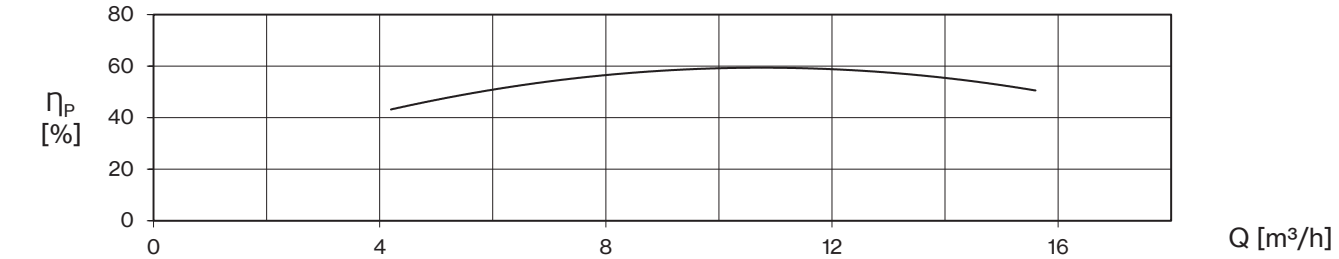

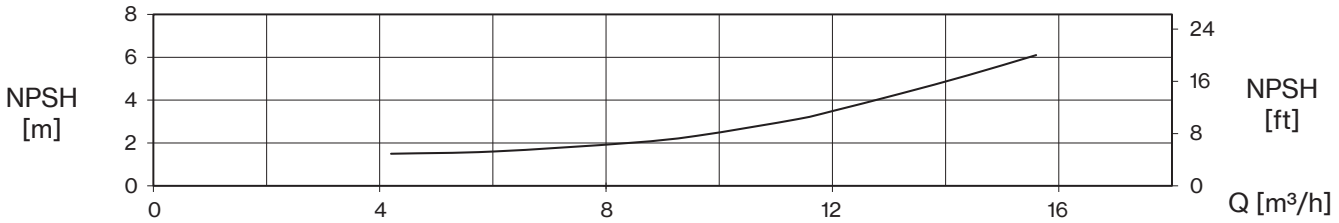

TYPE - 60 Hz		P2		P1		CURRENT		Q (m³/h - l/min)									
1~	3~			1~	3~	1~ 220V	3~ 380V	0	4,2	6	8,4	9,6	11,4	12	13,2	14,4	15,6
								0	70	100	140	160	190	200	220	240	260
		HP	kW	kW		A		H (m)									
P 9S-180/2	**P 9S-180/2T**	1,8	1,3	1,7	1,6	8,1	3,4	34,0	31,6	30,5	28,2	26,8	24,3	23,3	21,2	18,8	16,2
P 9S-200/3	**P 9S-200/3T**	2,5	1,84	2,5	2,3	11,5	4,4	50,5	47,0	45,2	41,8	39,7	35,8	34,3	30,9	27,0	22,7
P 9S-350/4	**P 9S-350/4T**	3,5	2,57	3,3	3,2	16,1	6,0	66,5	62,6	60,7	56,7	54,3	49,7	47,9	43,5	37,8	31,5
-	**P 9S-400/5T**	4	3	-	3,8	-	7,2	83,6	78,9	76,4	71,3	68,2	62,5	60,0	54,1	47,0	39,1

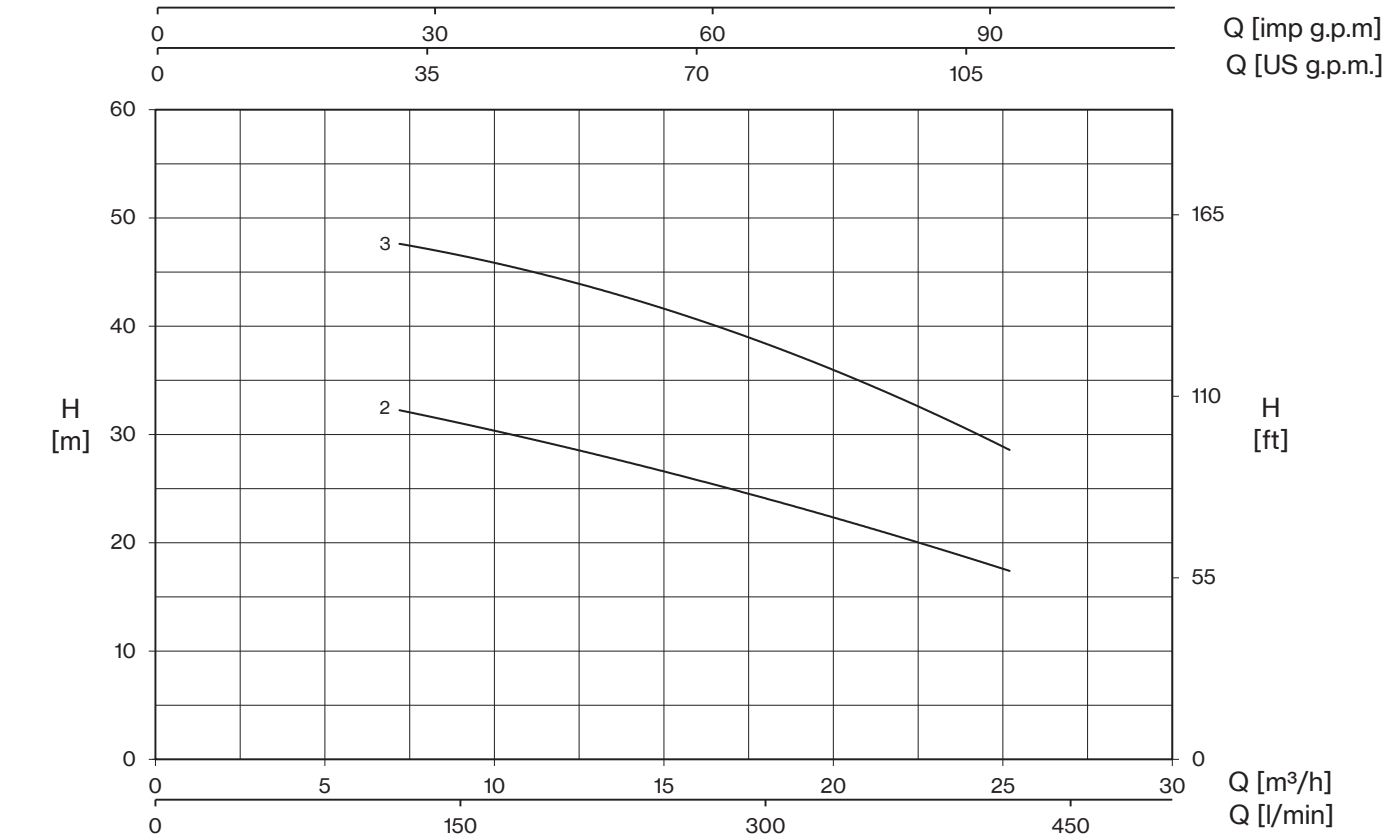

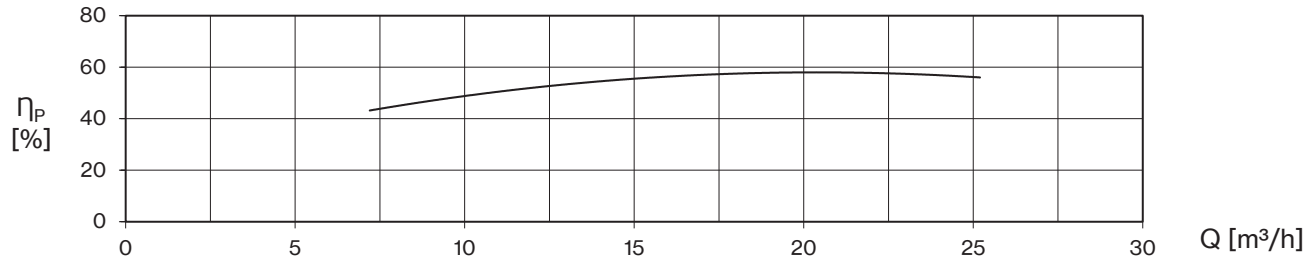

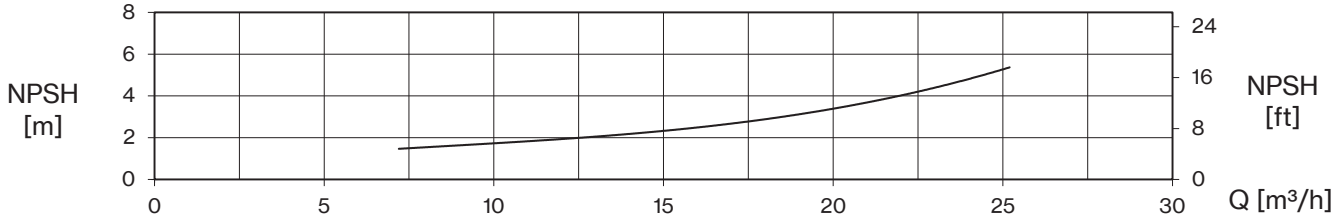

TYPE - 60 Hz	P2		P1	CURRENT	Q (m³/h - l/min)								
3~				3~ 380V	0	7,2	9,6	12	14,4	16,8	20,4	22,8	25,2
					0	120	160	200	240	280	340	380	420
	HP	kW	kW	A	H (m)								
P 18S-250/2T	3	2,2	2,6	5,1	34,3	32,1	30,8	29,2	26,9	24,8	22,1	20,0	17,2
P 18S-400/3T	4,5	3,37	4,0	7,4	50,2	47,8	46,1	44,1	42,0	39,6	35,9	32,6	28,1

PLUS S

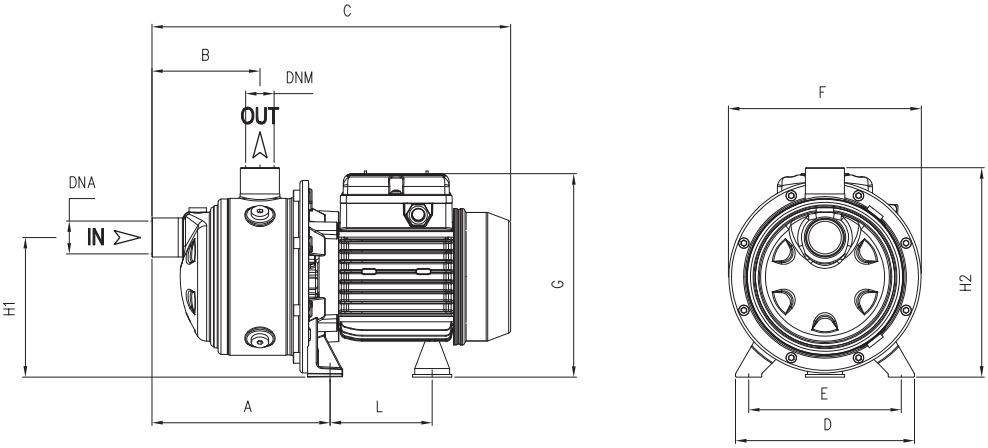

TYPE		DIMENSIONS (mm)															Kg	
1~	3~	A	B	C	D	E	F	G	L	H1	H2	DNA	DNM	I	L	M	1~	3~
P 3S-70/2	**P 3S-70/2T**	166,8	103	333	164	140	176	190	93,7	128	192	1" G	1" G	369	189	220	7,5	7,5
P 3S-80/3	**P 3S-80/3T**	166,8	103	356	164	140	176	203	104,7	128	192			444	189	220	10	10
P 3S-120/4	**P 3S-120/4T**	190,8	127	380	164	140	176	203	104,7	128	192			444	189	220	12	12
P 3S-150/5	**P 3S-150/5T**	214,8	151	465	164	140	176	211	128,2	134	198			529	189	240	18,5	18,5
P 5S-90/2	**P 5S-90/2T**	166,8	103	333	164	140	176	190	93,7	128	192			369	189	220	8,5	8,5
P 5S-120/3	**P 5S-120/3T**	166,8	103	356	164	140	176	203	104,7	128	192			444	189	220	11,5	11,5
P 5S-180/4	**P 5S-180/4T**	190,8	127	441	164	140	176	211	128,2	134	198			529	189	240	17	18
P 5S-250/5	**P 5S-250/5T**	214,8	151	465	164	140	176	211	128,2	134	198			529	189	240	18,5	17,5

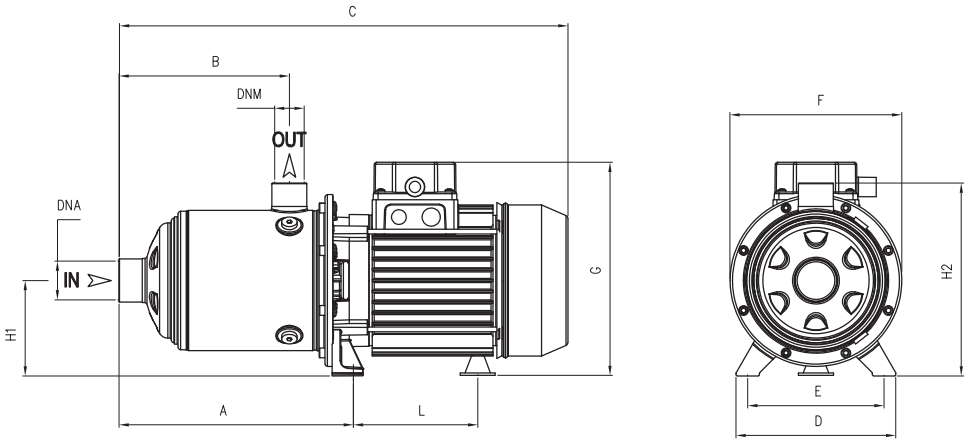

TYPE		DIMENSIONS (mm)															Kg	
1~	3~	A	B	C	D	E	F	G	L	H1	H2	DNA	DNM	I	L	M	1~	3~
P 7S-120/2	**P 7S-120/2T**	166,8	103	356	164	140	176	203	104,7	92	192	1" ¼ G	1" G	444	189	220	11	11
P 7S-200/3	**P 7S-200/3T**	166,8	103	417	164	140	176	211	128,2	98	198			529	189	240	16,5	16,5
P 7S-300/4	**P 7S-300/4T**	190,8	127	495 T 441	164	140	176	229 T 211	148,2 T 128,2	103 T 98	203 T 198			580 529	231 189	235 240	25	18
-	**P 7S-400/5T**	214,8	151	519	164	140	176	229	148,2	103	203			580	231	235	-	25,5
P 9S-180/2	**P 9S-180/2T**	185,8	118	436	164	140	176	211	128,2	98	198	1" ½ G	1" ¼ G	529	189	240	16,5	17
P 9S-200/3	**P 9S-200/3T**	185,8	118	436	164	140	176	211	128,2	98	198			529	189	240	17	17
P 9S-350/4	**P 9S-350/4T**	215,8	148	520	164	140	176	229	148,2	103	203			580	231	235	25	22
-	**P 9S-400/5T**	245,8	178	550	164	140	176	229	148,2	103	203			580	231	235	-	26
-	**P 18S-250/2T**	201	141	462	164	140	176	211	128,2	98	198	2" G	1" ½ G	529	189	240	-	17
-	**P 18S-400/3T**	238,5	141	516	164	140	176	229	148,2	103	203			529	189	240	-	25

1~ 110V - 60Hz	
TYPE	I (A)
P 3S-70/2	6,0
P 3S-80/3	9,2
P 3S-120/4	12
P 5S-90/2	8,8
P 5S-120/3	12,8
P 7S-120/2	13,8

LOTS				
TYPE	TRUCK		CONTAINER	
	PALLET (cm)	N° pumps	PALLET (cm)	N° pumps
P 3S-70/2(T)	80×120×150	84	80×120×175	96
P 3S-80/3(T)÷120/4(T)	85×110×160	70	85×110×185	80
P 3S-150/5(T)	90×110×150	48	90×110×170	56
P 5S-90/2(T)	80×120×150	84	80×120×175	96
P 5S-120/3(T)	85×110×160	70	85×110×185	80
P 5S-180/4(T)÷250/5(T)	90×110×150	48	90×110×170	56
P 7S-120/2(T)	85×110×160	70	85×110×185	80
P 7S-200/3(T)÷300/4(T)	90×110×150	48	90×110×170	56
P 7S-400/5T	80×120×150	42	80×120×175	49
P 9S-180/2(T)÷200/3(T)	90×110×150	48	90×110×170	56
P 9S-350/4(T)÷400/5T	80×120×150	42	80×120×175	49
P 18S-250/2T÷400/3T	90×110×150	48	90×110×170	56

PLUS (S) Serie-Mechanical seal and bearings

MECHANICAL SEAL	PUMP MODEL	SHAFT		STANDARD MATERIAL	OPTIONAL
	P3-70/2, P3-80/3, P3-120/4, P5-90/2, P5-120/3, P5-180/4, P7-120/2, P7-200/3, P7-300/4, P9-180/2, P9-200/3, P9-350/4, P18-250/2, P18-400/3	14mm / S	***Rotating face*** ***Stationary face*** ***Elastomer***	Graphite Ceramic EPDM	SiC SiC EPDM
	P3-150/5, P5-250/5, P7-400/5, P9-400/5	14mm	***Rotating face*** ***Stationary face*** ***Elastomer***	Graphite SiC EPDM	SiC SiC EPDM

BEARINGS	PUMP MODEL	TYPE	
	P3-70/2, P 5-90/2	6201-ZZ	6202-ZZ
	P3-80/3, P3-120/4, P5-120/3, P 7-120/2	6202-ZZ	6302-ZZ C3
	P3-150/5, P 5-180/4, P5-250/5, P7-200/3, 3~ P7-300/4, P 9-180/2, P9-200/3, P18-250/2	6203-ZZ	6304-ZZ C3
	1~ P7-300/4, P7-400/5, P9-350/4, P9-400/5, P18-400/3	6203-ZZ	6305-ZZ C3

PLUS + VSD

Horizontal booster pump with variable speed drive

DESCRIPTION

Horizontal pump of PLUS series provided with single-phase variable speed drive EPIC or three-phase EPIC-A.
This booster pump assures a desired pressure regardless of changes on flow demand making it suitable for low or missing pressure in domestic systems. A membrane tank downstream the system is required.

FEATURES

- EPIC or EPIC-A variable speed drive provided on board
- Three-phase horizontal pump of PLUS series
- Pressure sensor
- Cable with plug

FUNCTIONING

If the pressure in the network drops the pump will starts and gradually speeds up to provide with the set pressure. When the water demand decreases, the pressure will rise causing the pump speed to slow down and eventually to stop the pump if demand ceases. The pump will remain on standby waiting to start at the next water demand.

SELECTION

The table below shows the horizontal PLUS pump models available for the assembly with EPIC or EPIC-A.
Consult the catalog at the PLUS series for pump specifics and characteristic curves.

3~ PUMP TYPE		VSD TYPE		
ULTRA	ULTRA S	Power supply		
		1~ 220V	3~ 380V	3~ 220V
P 3-70/2T	**P 3S-70/2T**	EPIC	EPIC-A 304	EPIC-A 204
P 3-80/3T	**P 3S-80/3T**			
P 3-120/4T	**P 3S-120/4T**			EPIC-A 206
P 3-150/5T	**P 3S-150/5T**			
P 5-90/2T	**P 5S-90/2T**			EPIC-A 204
P 5-120/3T	**P 5S-120/3T**			EPIC-A 206
P 5-180/4T	**P 5S-180/4T**			EPIC-A 209
P 5-250/5T	**P 5S-250/5T**	-	EPIC-A 306	
P 7-120/2T	**P 7S-120/2T**	EPIC	EPIC-A 304	EPIC-A 206
P 7-200/3T	**P 7S-200/3T**		EPIC-A 306	EPIC-A 209
P 7-300/4T	**P 7S-300/4T**	-		-
P 7-400/5T	**P 7S-400/5T**		EPIC-A 309	
P 9-180/2T	**P 9S-180/2T**	EPIC	EPIC-A 304	EPIC-A 206
P 9-200/3T	**P 9S-200/3T**	-	EPIC-A 306	EPIC-A 209
P 9-350/4T	**P 9S-350/4T**		EPIC-A 309	-
P 9-400/5T	**P 9S-400/5T**			
P 18-250/2T	**P 18S-250/2T**		EPIC-A 306	EPIC-A 209
P 18-400/3T	**P 18S-400/3T**		EPIC-A 309	-

P5S /E 180/4 T 1×220-60

- power supply
- VSD model (only for EPIC-A)
- VSD type **/E** EPIC
  /A EPIC-A

Foras®

WATER PUMPS

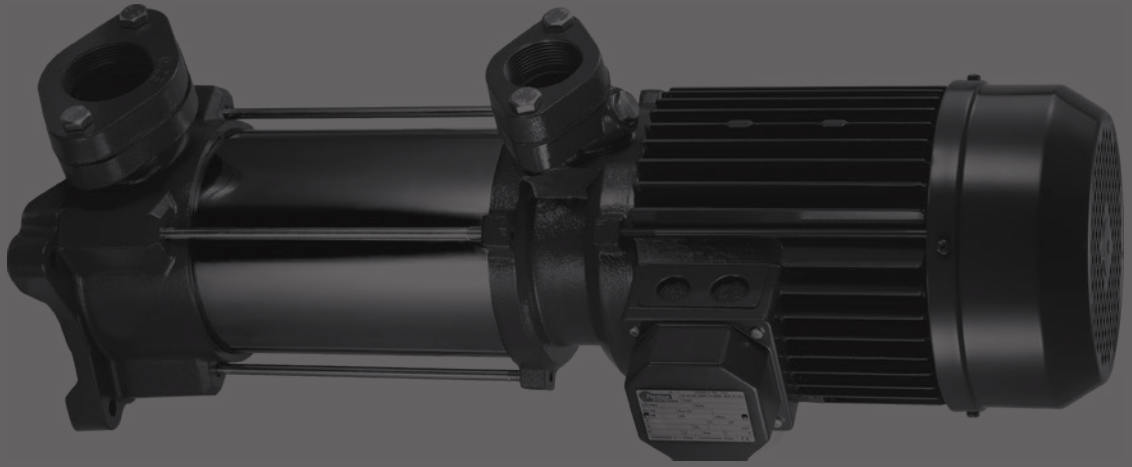

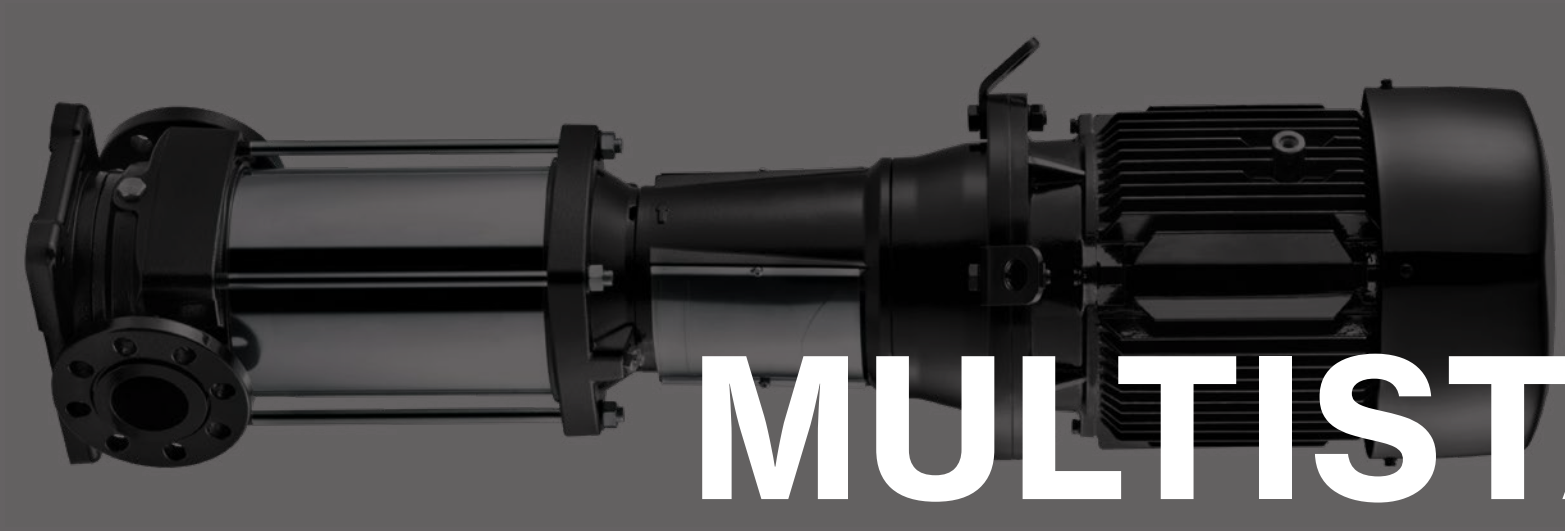

MULTISTAGE VERTICAL

MULTISTAGE VERTICAL PUMPS

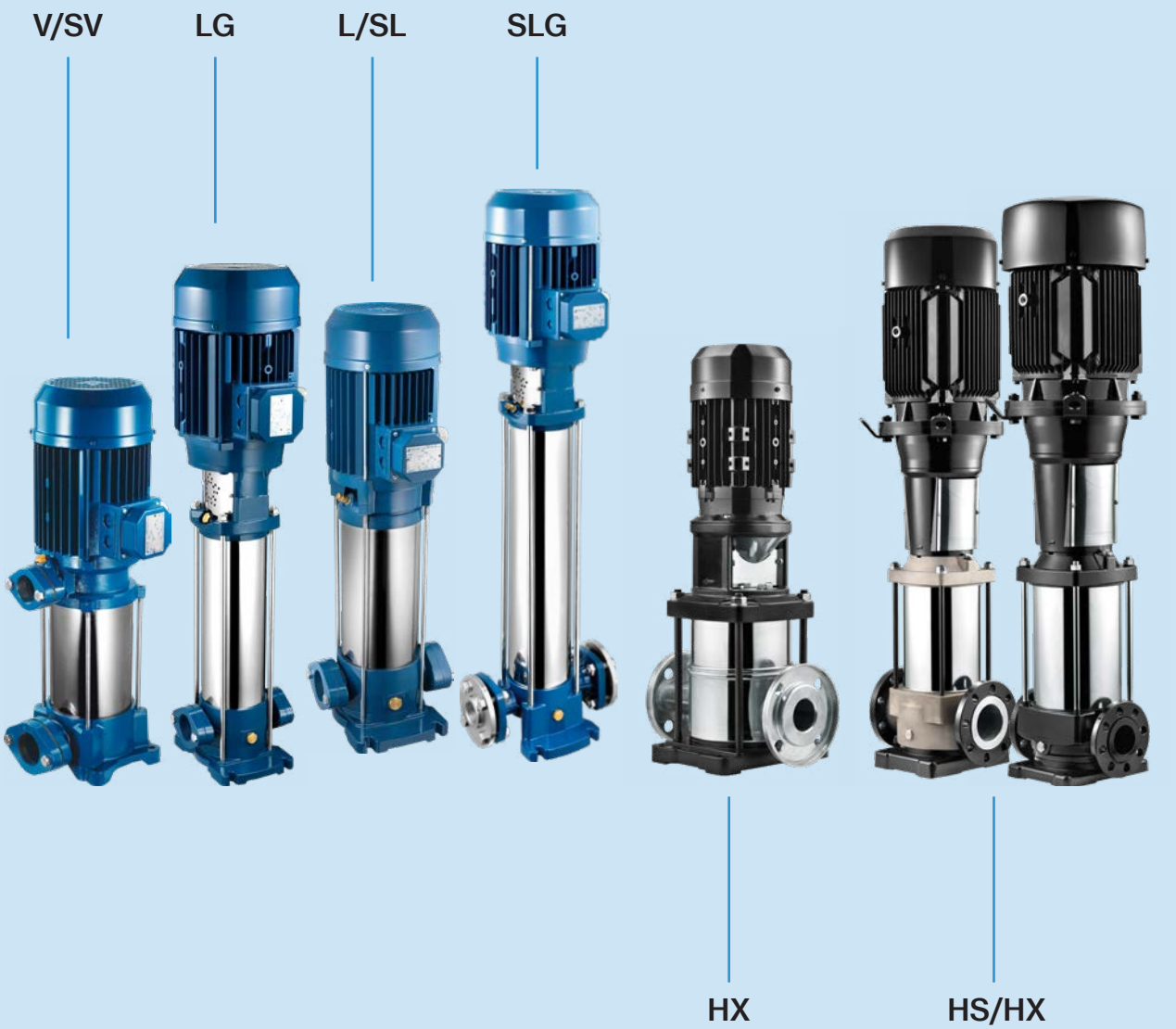

Family of vertical multistage monobloc pumps (V/L) with impellers in Noryl® or (SV/SL) in AISI 304; coupled pumps (LG) with impellers in Noryl® or (SLG) in AISI 304; coupled pumps (HS) with impellers in AISI 304 or (HX) in AISI 316.

Applications:

- Handling unloaded liquids
- Pressurization systems
- Residential and industrial irrigation and drinking water systems
- Washing systems

MULTISTAGE

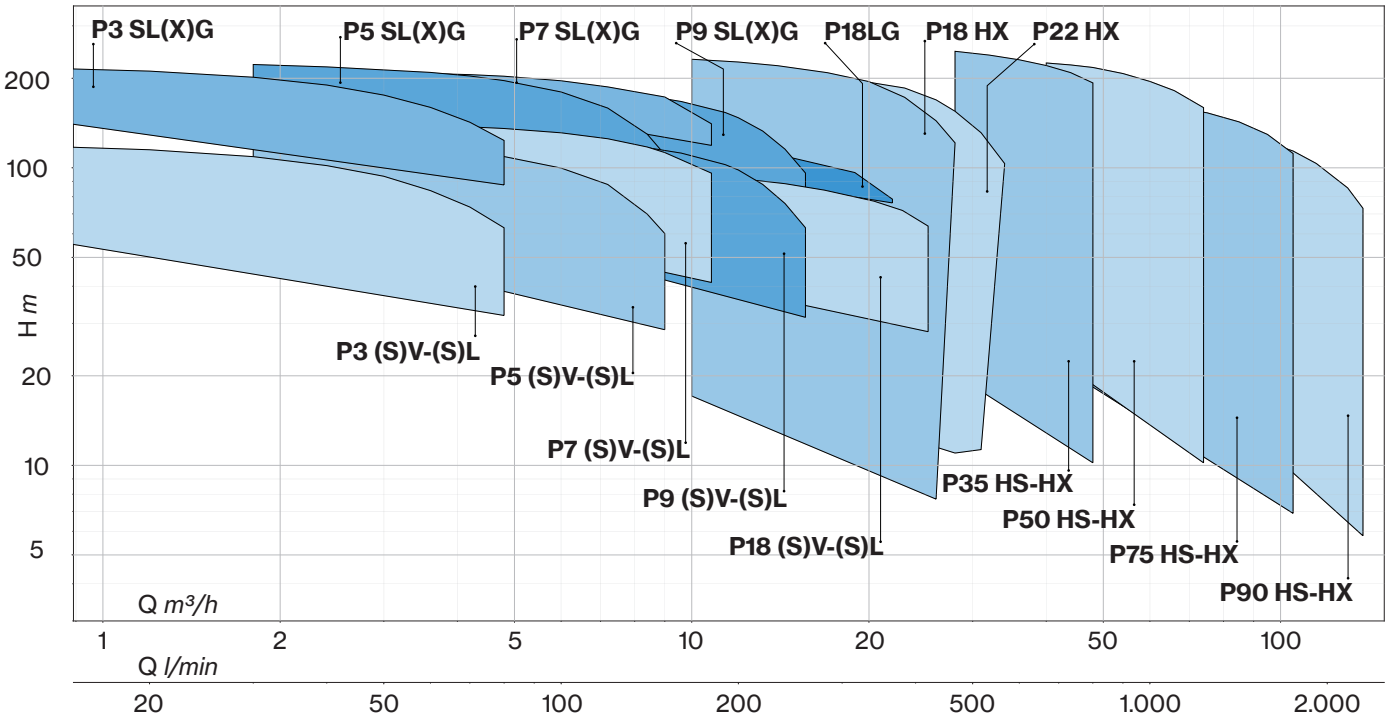
P3 SL(X)G
P5 SL(X)G
P7 SL(X)G
P9 SL(X)G
P18LG
P18 HX
P22 HX
P3 (S)V-(S)L
P5 (S)V-(S)L
P7 (S)V-(S)L
P9 (S)V-(S)L
P18 (S)V-(S)L
P35 HS-HX
P50 HS-HX
P75 HS-HX
P90 HS-HX
H m
200
100
50
20
10
5
Q m³/h
1
2
5
10
20
50
100
Q l/min
20
50
100
200
500
1.000
2.000

PLUS V/L

Multistage Vertical

PLUS V

PLUS 3-5-7 L

PLUS 9-18 L

Stainless steel multistage vertical pumps. Pumping of clean non-loaded fluids, pressurizing system, irrigation, drinking and glycol water, water treatment, food industry, heating and air conditioning, washing system.

Construction features	
Pump body	cast iron
Motor bracket	cast iron
Impellers, diffusers	Noryl®
Shell, motor shaft	stainless steel AISI 304
Mechanical seal	ceramic-graphite-EPDM graphite-silicon carbide-EPDM
Intermediate shaft guiding stage bush	ceramic-tungsten carbide
Ambient temperature	max 40 °C
Liquid temperature	+5 ÷ +35 °C
Max operating pressure	8 bar ≤ 4 impellers; 14 bar ≥ 5 impellers
Pump body gasket	EPDM

Motor	
2 poles induction motor	3~ 220/380V - 60Hz 1~ 220V - 60Hz (with thermal protection up to 1,85 kW)
Insulation class	F
Protection degree	IPX4 IPX5 ≥ 4,5 HP

P 3 V - 120 / 4 T

- **T** motor: 1~ / **T** 3~
- 4: No. of impellers
- **V**: **L** vertical axis, in-line ports; **V** vertical axis, overlapped ports
- 3: nominal flow-rate m³/h
- P: pump type

More details of the mechanical seals are included on page 233

PLUS LG

Multistage Vertical

Stainless steel multistage vertical pumps. Pumping of clean non-loaded fluids, pressuriz ing system, irrigation, drinking and glycol water, water treatment, food industry, heating and air conditioning, washing system.

Construction features	
Pump body	cast iron
Motor bracket	cast iron
Impellers, diffusers	Noryl®
Shell, motor shaft	stainless steel AISI 304
Mechanical seal	ceramic-graphite-EPDM graphite-silicon carbide-EPDM
Intermediate shaft guiding stage bush	ceramic-tungsten carbide
Ambient temperature	max 40 °C
Liquid temperature	+5 ÷ +35 °C
Max operating pressure	14 bar
Pump body gasket	EPDM

Motor	
2 poles induction motor	3~ 220/380V - 60Hz
Insulation class	F
Protection degree	IPX5

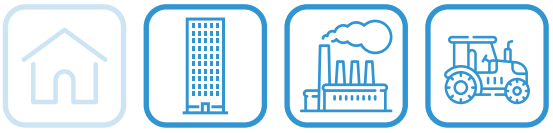

P 18 L G - 950 / 7 T

- T — motor T 3~
- 7 — No. of impellers
- G — coupling
- L — vertical axis, in-line ports
- 18 — nominal flow-rate m³/h
- P — pump type

More details of the mechanical seals are included on page 233

PLUS 3 V/L

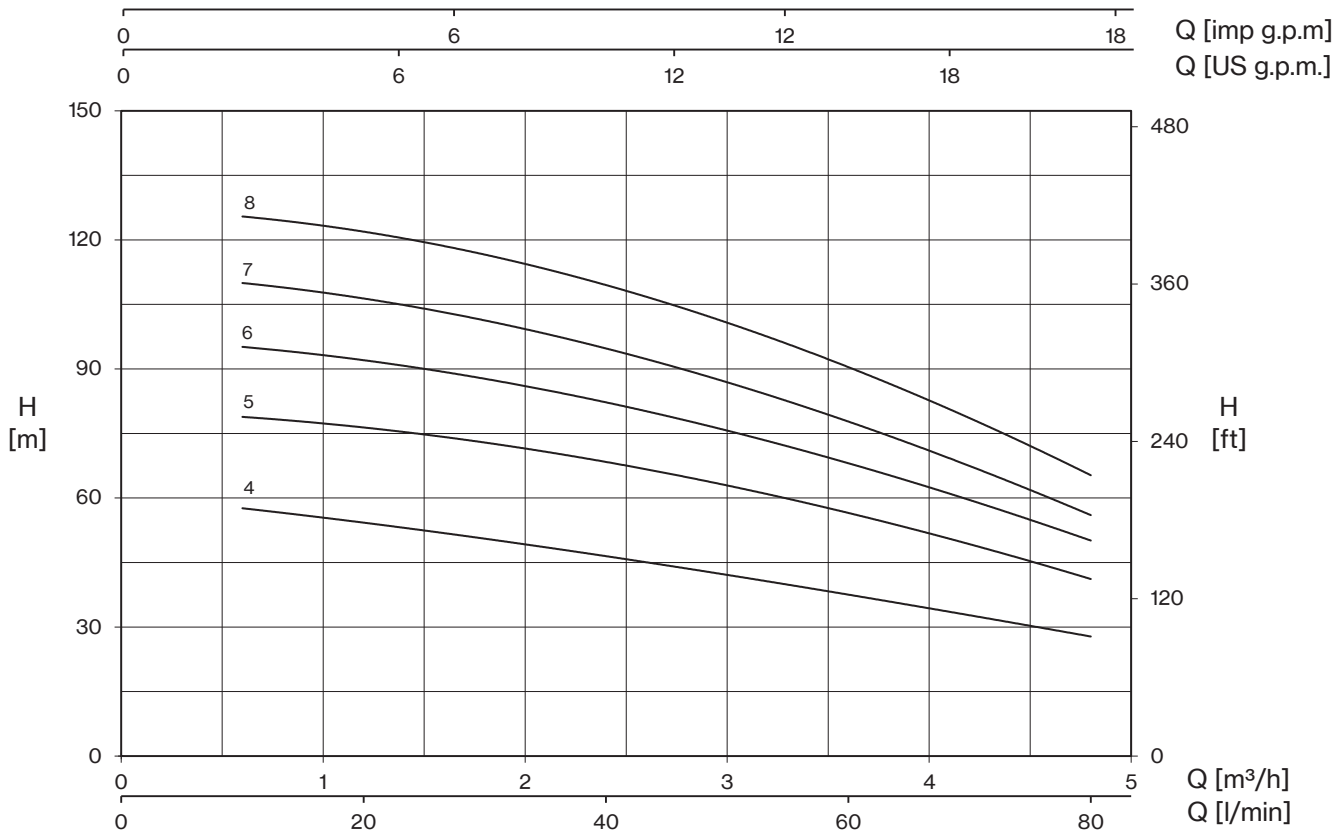

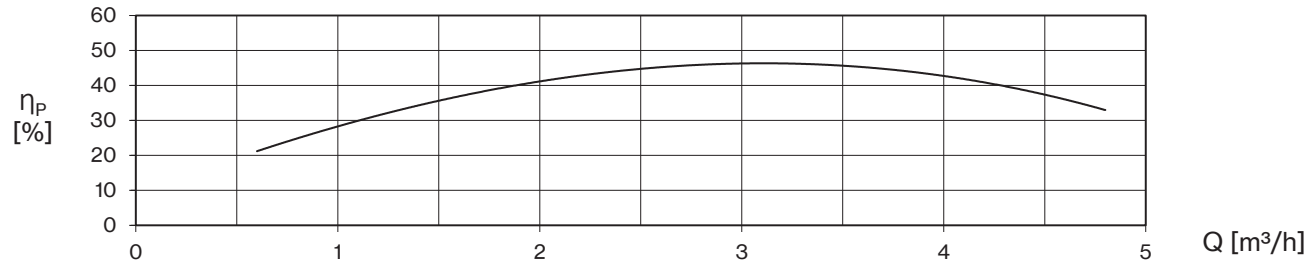

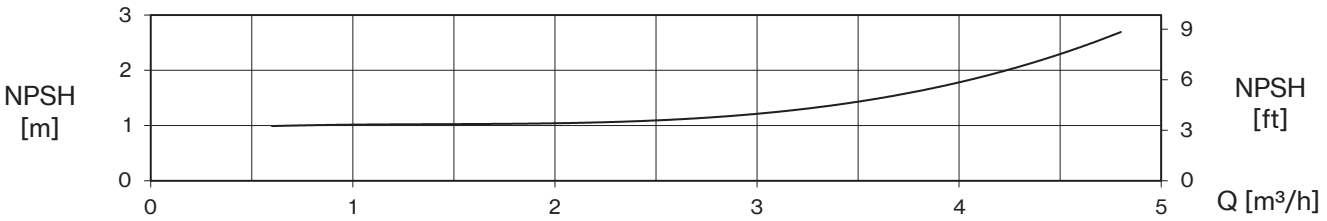

TYPE - 60 Hz		P2		P1		CURRENT		Q (m³/h - l/min)								
1~	3~			1~	3~	1~ 220V	3~ 380V	0	0,6	1,2	1,8	2,4	3	3,6	4,2	4,8
								0	10	20	30	40	50	60	70	80
		HP	kW	kW		A		H (m)								
P 3...-120/4	**P 3...-120/4T**	1,2	0,9	1,5	1,4	6,9	2,8	60,5	57,6	54,3	50,5	46,6	41,9	37,7	32,7	27,8
P 3...-150/5	**P 3...-150/5T**	1,8	1,3	1,6	1,5	7,5	3,3	79,2	78,8	76,5	72,8	68,4	62,8	56,6	49,3	41,2
P 3...-200/6	**P 3...-200/6T**	2,5	1,84	1,9	1,8	8,9	3,7	95,1	95,2	91,9	87,7	82,4	75,4	68,3	59,4	50,1
P 3...-250/7	**P 3...-250/7T**	2,5	1,84	2,2	2,0	10,4	4,0	110,6	109,9	106,6	101,3	94,8	86,6	78,0	67,5	55,9
P 3...-300/8	**P 3...-300/8T**	3	2,2	2,7	2,4	13,5	4,8	126,5	125,2	122,4	116,5	109,4	100,6	90,5	78,8	65,1

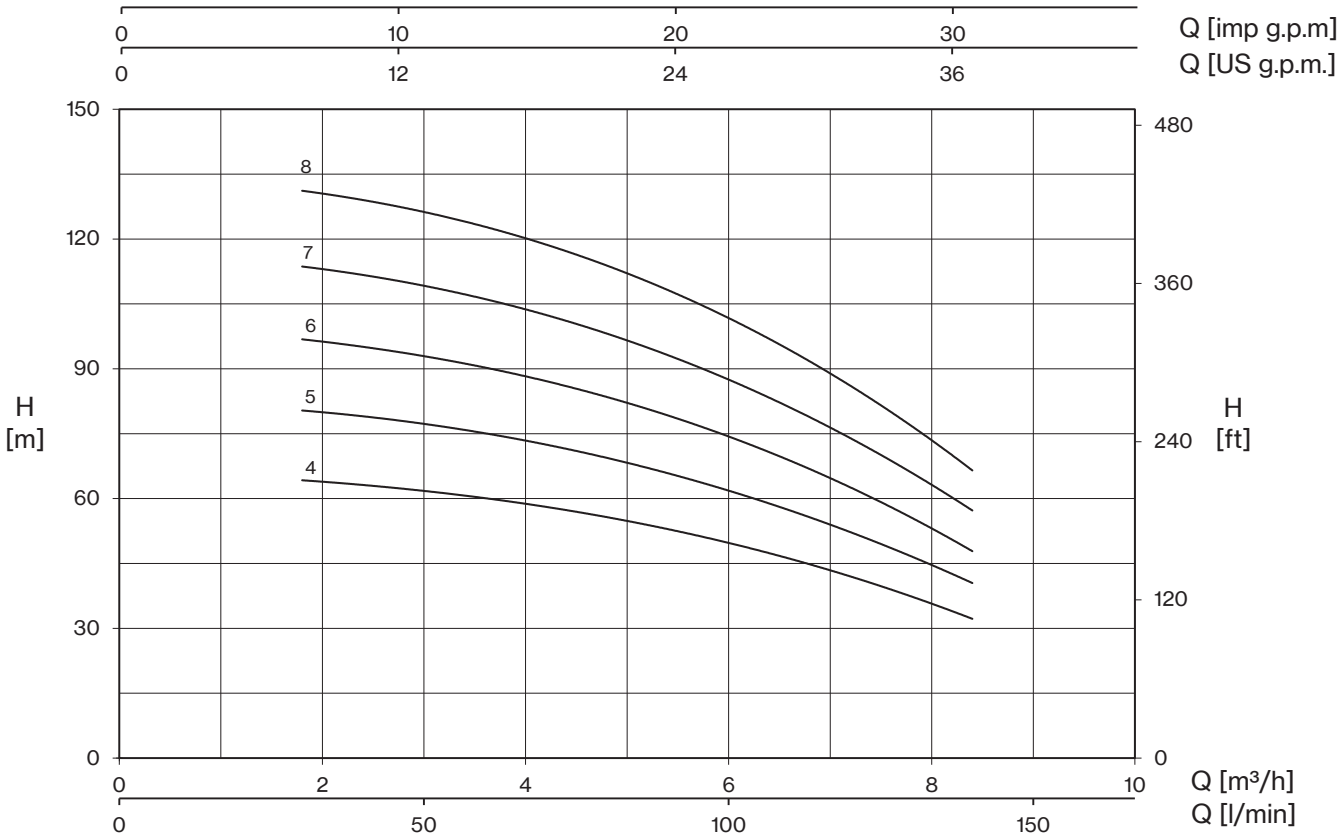

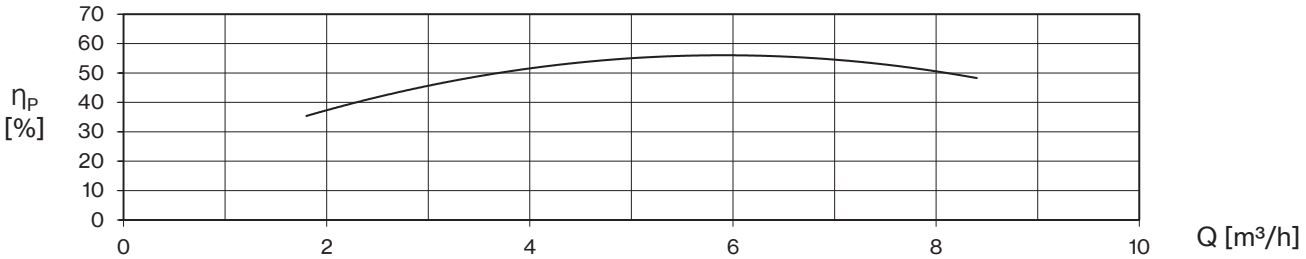

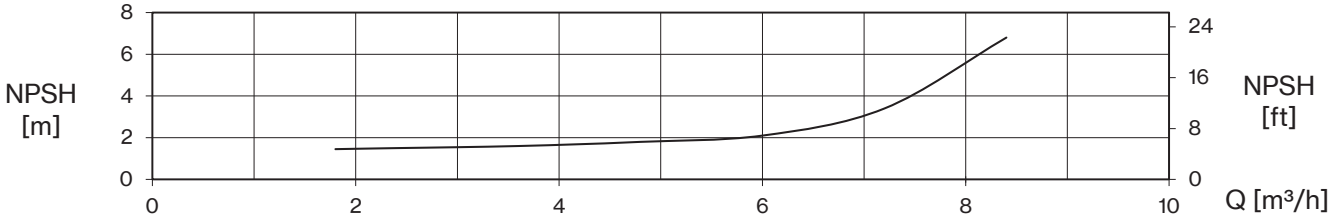

TYPE - 60 Hz		P2		P1		CURRENT		Q (m³/h - l/min)									
1~	3~			1~	3~	1~ 220V	3~ 380V	0	1,8	2,4	3	3,6	4,2	4,8	6	7,2	8,4
								0	30	40	50	60	70	80	100	120	140
		HP	kW	kW		A		H (m)									
P 5...-180/4	**P 5...-180/4T**	1,8	1,3	1,9	1,8	9,1	3,6	66,0	64,2	63,2	61,7	59,9	58,6	55,5	49,8	42,0	32,2
P 5...-250/5	**P 5...-250/5T**	2,5	1,84	2,4	2,2	11,1	4,3	82,9	80,4	79,0	77,4	74,9	72,6	69,4	61,9	52,1	40,5
P 5...-300/6	**P 5...-300/6T**	3	2,2	3,0	2,6	15,1	5,1	99,8	96,8	95,1	92,8	90,1	87,7	83,2	74,4	62,5	47,9
-	**P 5...-350/7T**	3,5	2,57	-	3,2	-	6,0	116,5	113,7	111,6	109,1	106,3	101,9	98,6	87,7	73,7	57,3
-	**P 5...-400/8T**	4	3	-	3,6	-	6,9	134,7	131,1	129,2	126,1	123,0	118,4	114,1	101,7	86,0	66,5

PLUS 7 V/L

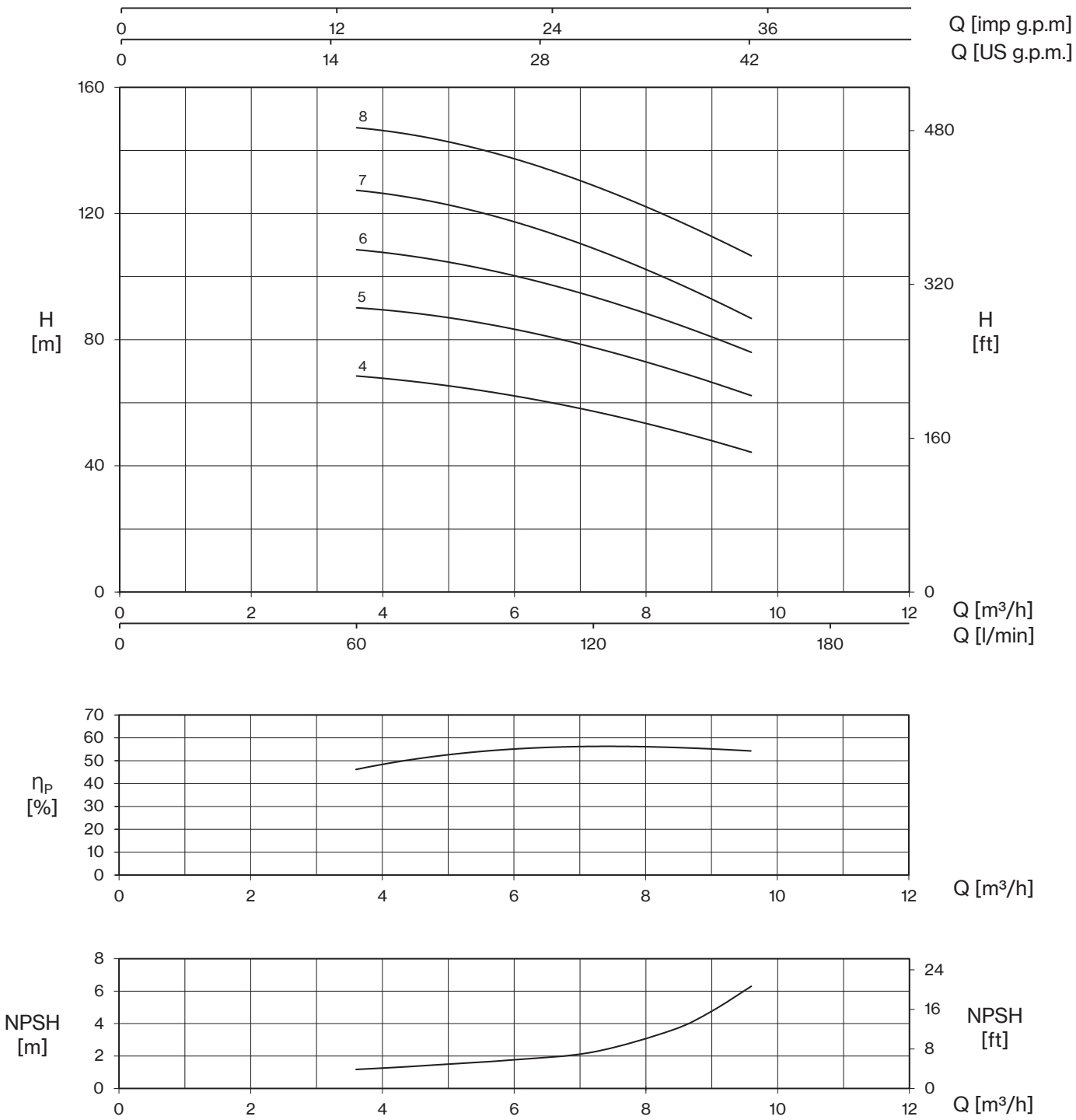

TYPE - 60 Hz		P2		P1		CURRENT		Q (m³/h - l/min)								
1~	3~			1~	3~	1~ 220V	3~ 380V	0	3,6	4,2	4,8	6	7,2	8,4	9	9,6
								0	60	70	80	100	120	140	150	160
		HP	kW	kW		A		H (m)								
P 7...-300/4	**P 7...-300/4T**	3	2,2	2,9	2,6	14,5	5,1	71,1	68,5	67,4	65,9	62,2	57,3	51,4	48,0	44,3
-	**P 7...-400/5T**	4	3	-	3,4	-	6,5	91,3	90,1	89,1	87,6	83,3	77,5	70,5	66,5	62,2
-	**P 7...-450/6T**	4,5	3,37	-	4,2	-	7,7	110,1	108,5	107,2	105,3	100,2	93,5	85,5	80,9	75,9
-	**P 7...-550/7T**	5,5	4	-	4,8	-	9,0	129,1	127,4	125,7	123,6	117,4	108,9	98,6	92,9	86,7
-	**P 7...-750/8T**	7,5	5,5	-	5,6	-	10,8	148,2	147,2	145,8	143,6	137,3	128,8	118,5	112,8	106,6

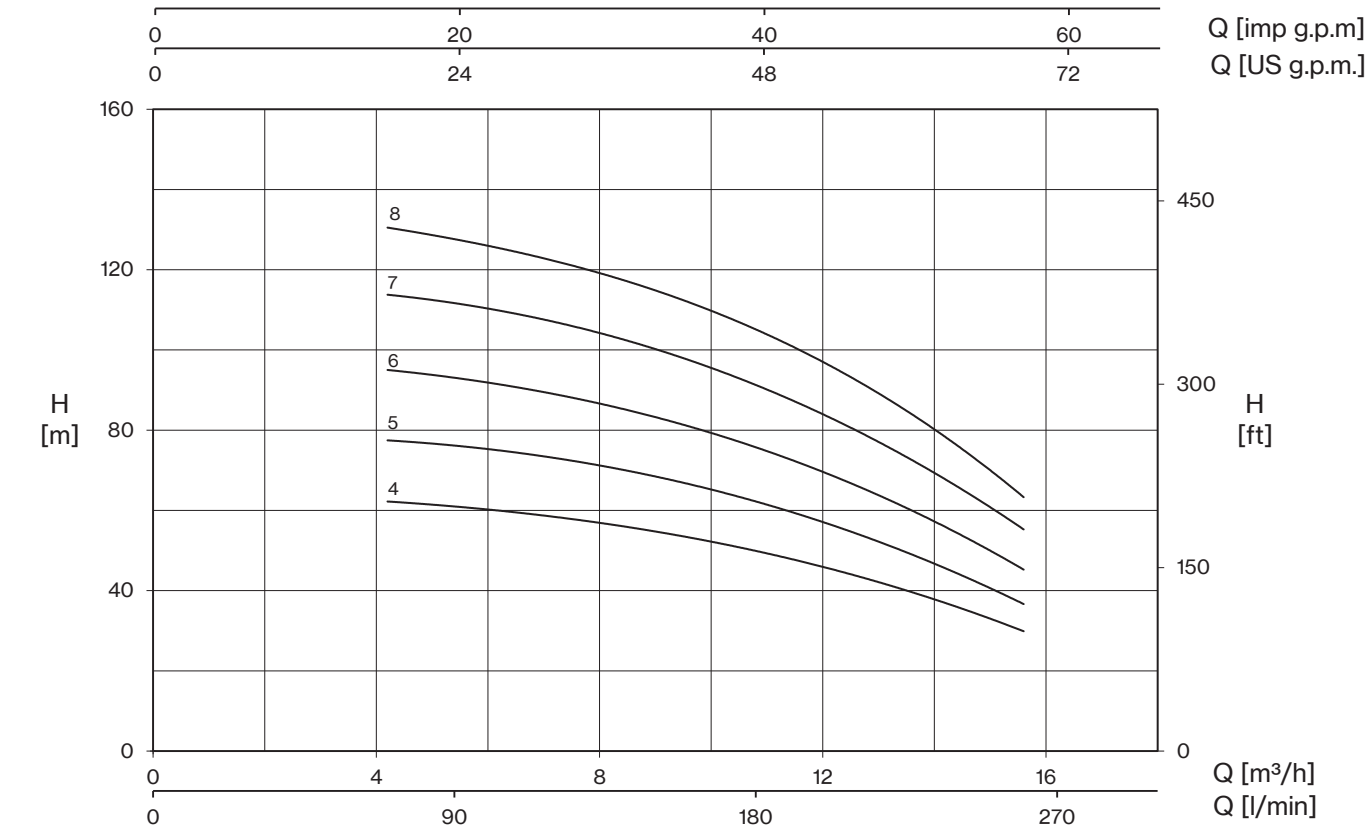

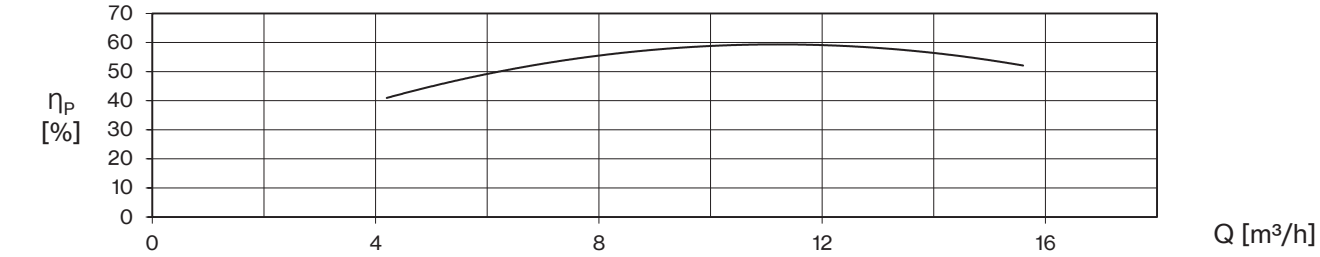

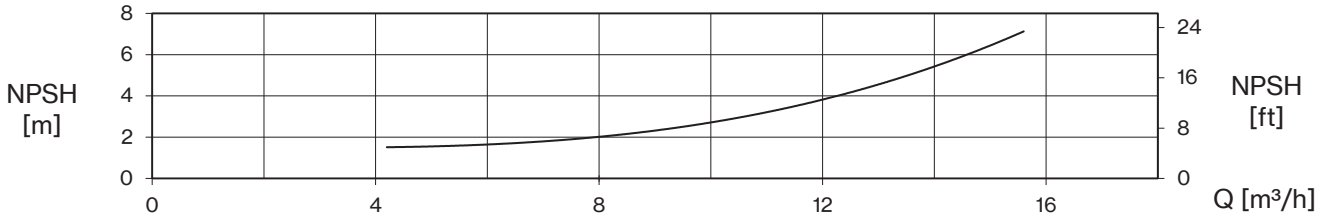

TYPE - 60 Hz		P2		P1		CURRENT		Q (m³/h - l/min)									
1~	3~			1~	3~	1~ 220V	3~ 380V	0	4,2	6	8,4	9,6	11,4	12	13,2	14,4	15,6
								0	70	100	140	160	190	200	220	240	260
		HP	kW	kW		A		H (m)									
P 9...-350/4	**P 9...-350/4T**	3,5	2,57	3,2	3,1	15,8	5,9	67,0	62,3	60,1	56,1	53,4	48,2	45,9	41,0	35,8	30,0
-	**P 9...-400/5T**	4	3	-	3,7	-	7,0	83,6	77,7	74,9	70,2	66,8	59,9	57,0	50,7	44,2	36,9
-	**P 9...-450/6T**	4,5	3,37	-	4,5	-	8,3	101,9	95,2	91,6	85,3	81,4	72,9	69,5	62,1	54,3	45,5
-	**P 9...-550/7T**	6	4,4	-	5,3	-	9,8	120,6	114,0	110,0	102,6	97,7	88,1	84,0	74,9	65,6	55,7
-	**P 9...-750/8T**	7,5	5,5	-	6,2	-	11,6	138,0	130,5	126,1	117,4	111,9	101,3	97,1	87,6	75,9	63,5

PLUS 18 V/L

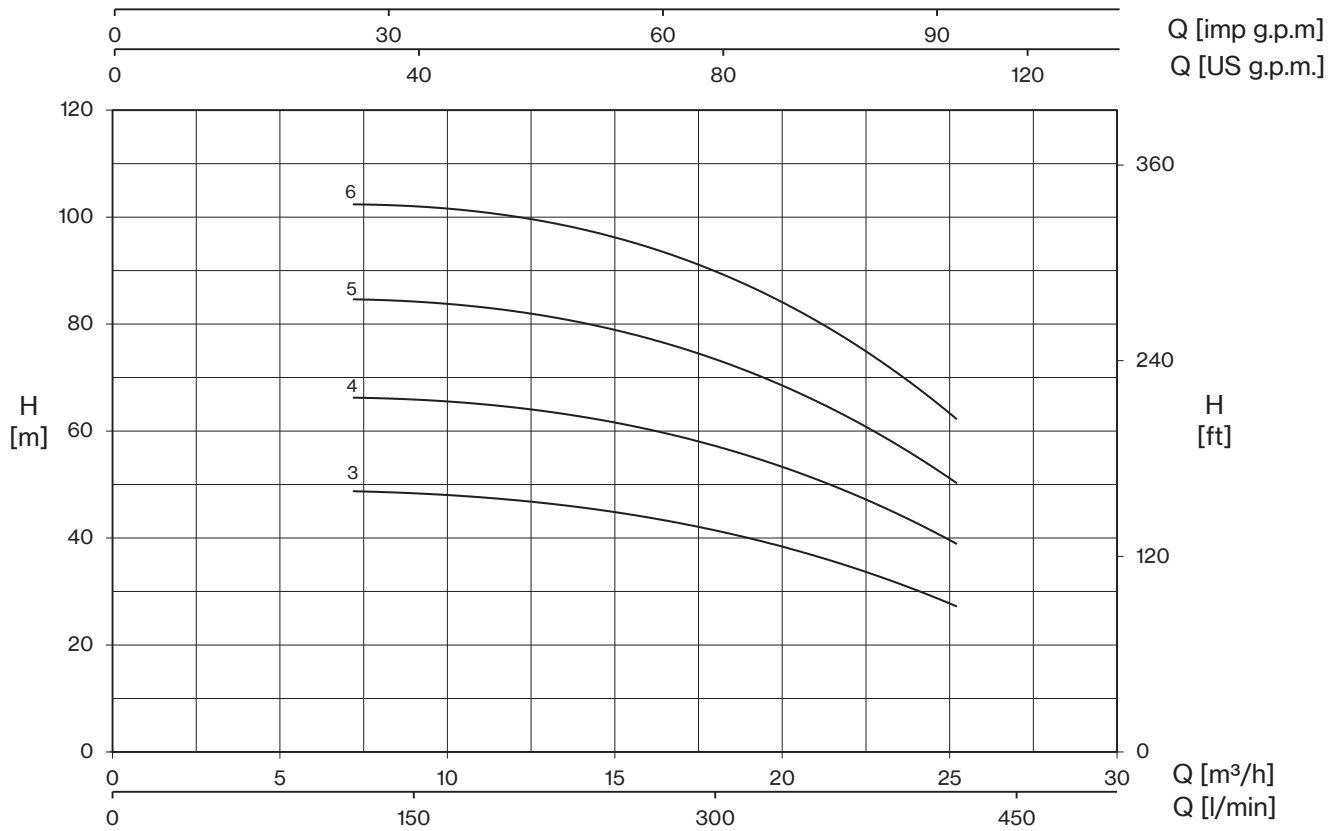

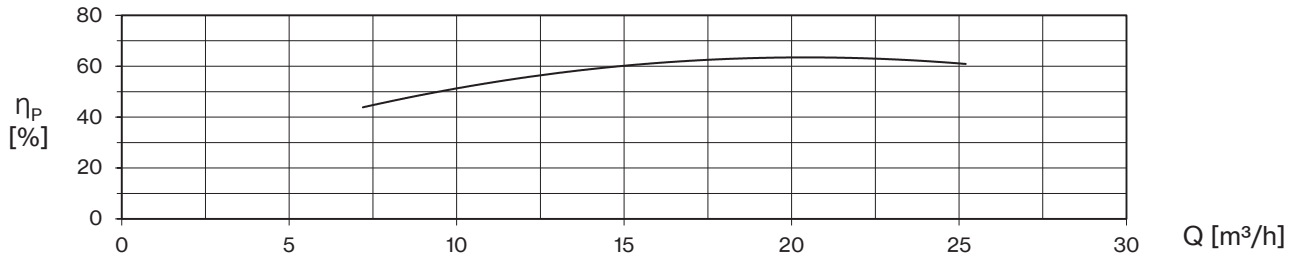

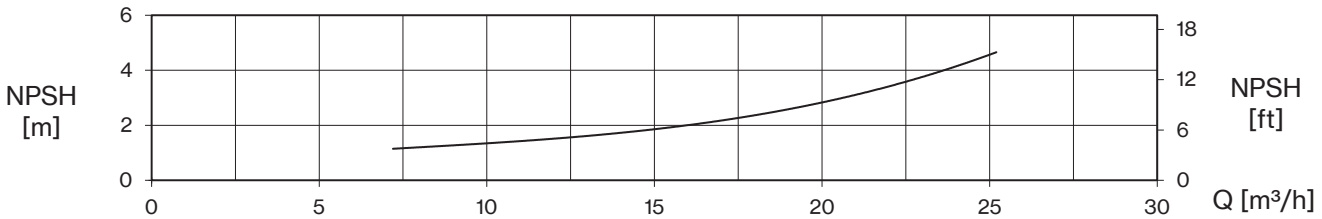

TYPE - 60 Hz	P2		P1	CURRENT	Q (m³/h - l/min)								
3~				3~ 380V	0	7,2	9,6	12	14,4	16,8	20,4	22,8	25,2
					0	120	160	200	240	280	340	380	420
	HP	kW	kW	A	H (m)								
P 18...-400/3T	4,5	3,37	3,9	7,3	50,8	48,8	48,2	47,0	45,3	43,1	37,6	32,7	27,4
P 18...-550/4T	6	4,4	5,2	9,7	68,3	66,3	65,7	64,3	62,2	59,4	52,3	45,9	39,2
P 18...-750/5T	7,5	5,5	6,7	12,3	86,4	84,6	84,1	82,2	79,6	76,2	67,2	59,2	50,6
P 18...-900/6T	10	7,5	8,0	14,9	104,0	102,2	102,0	99,8	97,0	93,1	82,6	73,0	62,6

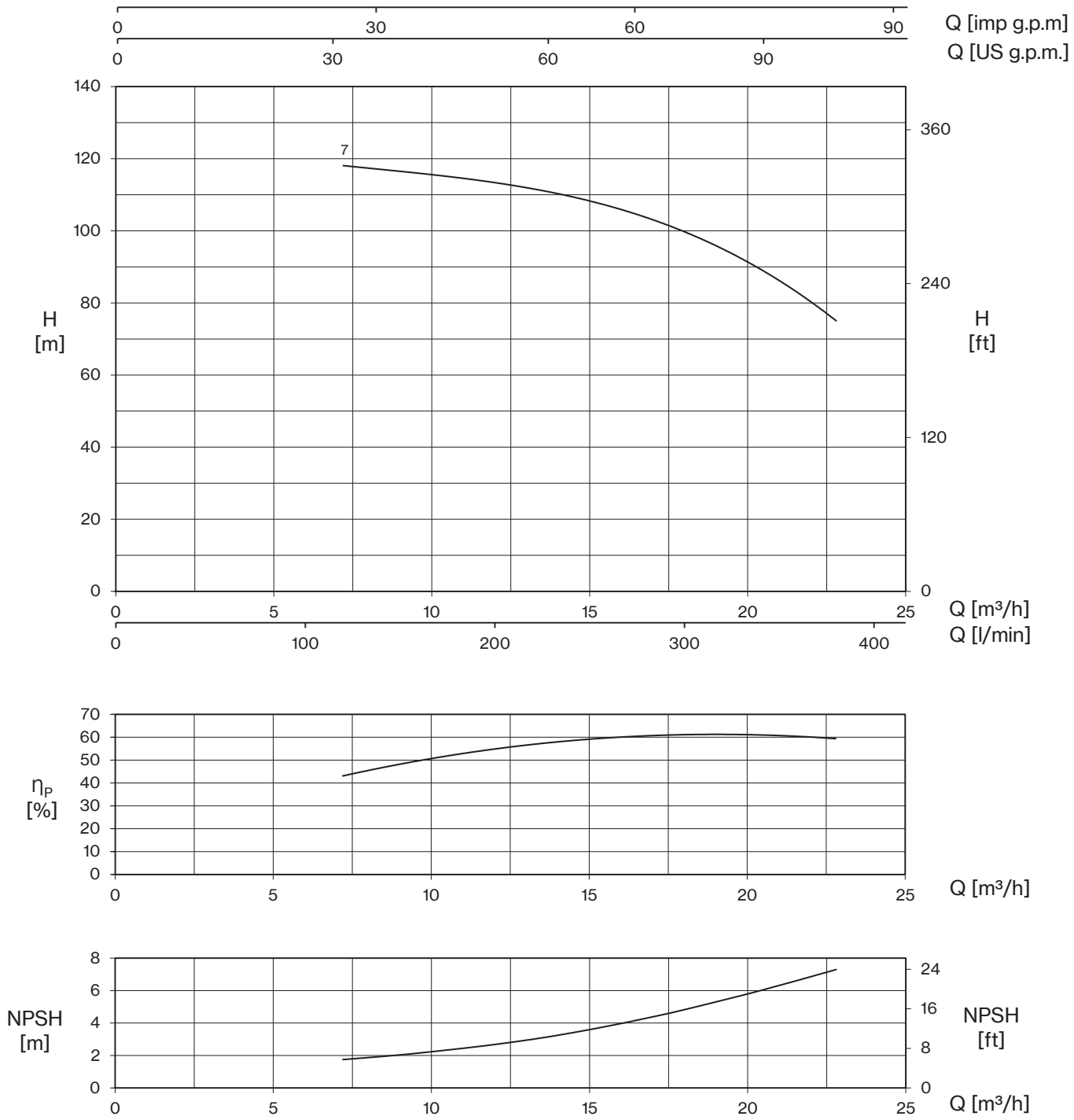

TYPE - 60 Hz	P2		P1	CURRENT	Q (m³/h - l/min)							
3~				3~ 380V	0	7,2	9,6	12	14,4	16,8	20,4	22,8
					0	120	160	200	240	280	340	380
	HP	kW	kW	A	H (m)							
P 18LG-950/7T	10	7,5	9,0	15,4	120,3	117,5	116,4	113,3	109,0	103,7	89,9	74,7

PLUS V

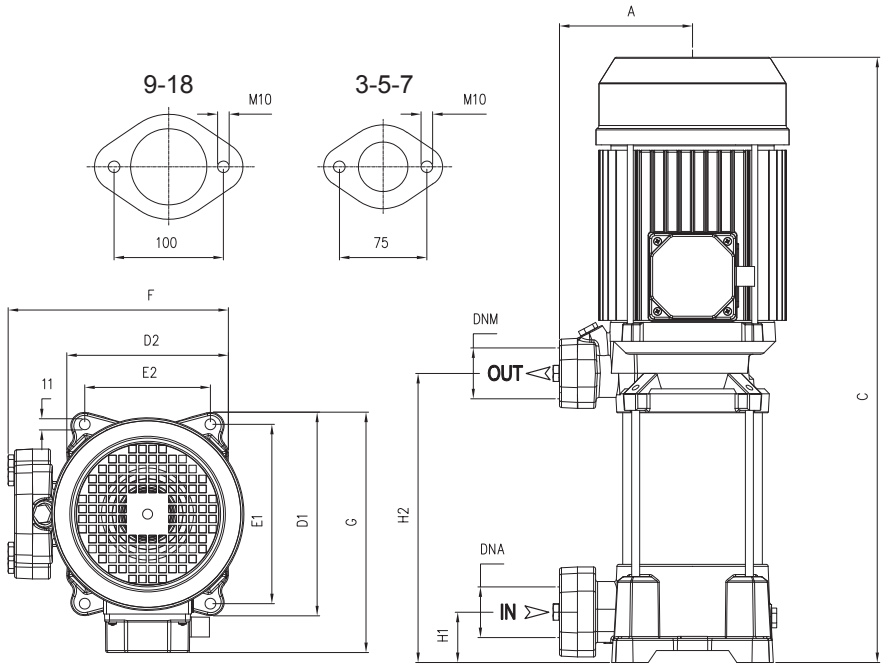

TYPE		DIMENSIONS (mm)																
1~	3~	A	C	D1	D2	E1	E2	F	G	H1	H2	DNA	DNM	I	L	M	1~	3~
P 3V-120/4	**P 3V-120/4T**	135	389	204	162	178,5	125	229	213	40	178	1” ¼ G	1” ¼ G	580	231	235	17,5	17,5
P 3V-150/5	**P 3V-150/5T**	135	473	204	162	178,5	125	229	213	40	202			580	231	235	24	24
P 3V-200/6	**P 3V-200/6T**	135	497	204	162	178,5	125	229	220	40	226			580	231	235	23	23
P 3V-250/7	**P 3V-250/7T**	135	521	204	162	178,5	125	229	220	40	250			580	231	235	24	23
P 3V-300/8	**P 3V-300/8T**	135	555	204	162	178,5	125	229	220	40	274			580	231	235	31,5	25
P 5V-180/4	**P 5V-180/4T**	135	449	204	162	178,5	125	229	220	40	178	1” ¼ G	1” ¼ G	580	231	235	22,5	24
P 5V-250/5	**P 5V-250/5T**	135	473	204	162	178,5	125	229	220	40	202			580	231	235	24	23
P 5V-300/6	**P 5V-300/6T**	135	552 T 497	204	162	178,5	125	229	228 T 220	40	226			580	231	235	31	24,5
-	**P 5V-350/7T**	135	576	204	162	178,5	125	229	228	40	250			650	246	246	-	28
-	**P 5V-400/8T**	135	600	204	162	178,5	125	229	228	40	274			650	246	246	-	31,5
P 7V-300/4	**P 7V-300/4T**	135	504 T 449	204	162	178,5	125	229	228 T 220	40	178	1” ¼ G	1” ¼ G	580	231	235	30,5	24
-	**P 7V-400/5T**	135	528	204	162	178,5	125	229	228	40	202			580	231	235	-	30,5
-	**P 7V-450/6T**	135	580	204	162	178,5	125	229	243	40	226			779	261	295	-	36
-	**P 7V-550/7T**	135	604	204	162	178,5	125	229	243	40	250			779	261	295	-	40,5
-	**P 7V-750/8T**	135	691	204	162	178,5	125	229	253	40	274			909	274	303	-	50
P 9V-350/4	**P 9V-350/4T**	135	528	204	162	178,5	125	229	228	40	202	1” ½ G	1” ¼ G	580	231	235	30,5	27,5
-	**P 9V-400/5T**	135	558	204	162	178,5	125	229	228	40	232			580	231	235	-	30,5
-	**P 9V-450/6T**	135	616	204	162	178,5	125	229	243	40	262			779	261	295	-	36
-	**P 9V-550/7T**	135	646	204	162	178,5	125	229	243	40	292			779	261	295	-	40,5
-	**P 9V-750/8T**	135	739	204	162	178,5	125	229	253	40	322			909	274	303	-	50
-	**P 18V-400/3T**	135	536	204	162	178,5	125	229	228	50	211	2” G	1” ½ G	580	231	235	-	31,5
-	**P 18V-550/4T**	135	602	204	162	178,5	125	235	243	50	248			580	231	235	-	40
-	**P 18V-750/5T**	135	703	204	162	178,5	125	255	253	50	289			779	261	295	-	50
-	**P 18V-900/6T**	135	740	204	162	178,5	125	255	253	50	326			779	261	295	-	56,5

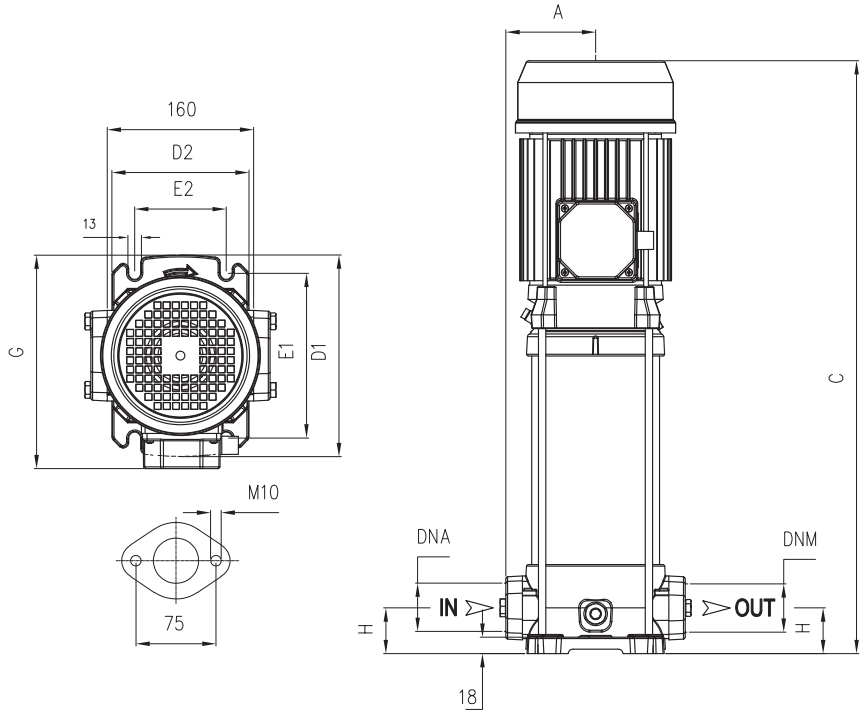

TYPE		DIMENSIONS (mm)														
1~	3~	A	C	D1	D2	E1	E2	G	H	DNA	DNM	I	L	M	1~	3~
P 3L-120/4	**P 3L-120/4T**	98	405	220	150	180	100	228	50			580	231	235	19,5	19,5
P 3L-150/5	**P 3L-150/5T**	98	489	220	150	180	100	228	50			580	231	235	26,5	26,5
P 3L-200/6	**P 3L-200/6T**	98	513	220	150	180	100	228	50	1" ¼ G	1" ¼ G	539	261	280	25,5	25,5
P 3L-250/7	**P 3L-250/7T**	98	537	220	150	180	100	228	50			539	261	280	24,5	25,5
P 3L-300/8	**P 3L-300/8T**	98	571	220	150	180	100	228	50			664	261	295	24,5	27
P 5L-180/4	**P 5L-180/4T**	98	465	220	150	180	100	228	50			580	231	235	25	26
P 5L-250/5	**P 5L-250/5T**	98	489	220	150	180	100	228	50			580	231	235	26	25
P 5L-300/6	**P 5L-300/6T**	98	568 T 513	220	150	180	100	236 T 228	50	1" ¼ G	1" ¼ G	539 T 580	261 T 231	280 T 235	33	26,5
-	**P 5L-350/7T**	98	592	220	150	180	100	236	50			664	261	295	-	31
-	**P 5L-400/8T**	98	616	220	150	180	100	236	50			664	261	295	-	34,5
P 7L-300/4	**P 7L-300/4T**	98	520 T 465	220	150	180	100	236 T 228	50			539 T 580	261 T 231	280 T 235	32,5	26
-	**P 7L-400/5T**	98	544	220	150	180	100	236	50			539	261	280	-	33
-	**P 7L-450/6T**	98	596	220	150	180	100	251	50	1" ¼ G	1" ¼ G	665	261	295	-	37,5
-	**P 7L-550/7T**	98	620	220	150	180	100	251	50			665	261	295	-	42,5
-	**P 7L-750/8T**	98	707	220	150	180	100	260	50			909	274	303	-	52

PLUS L

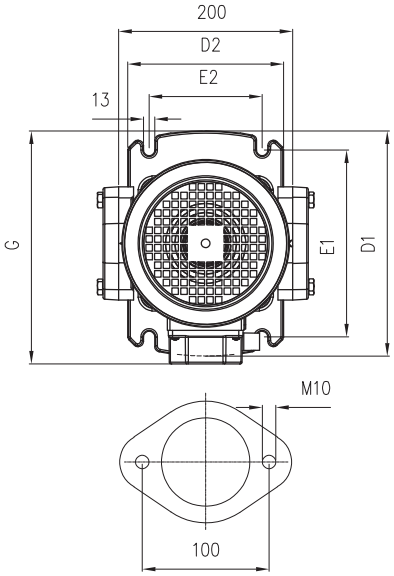

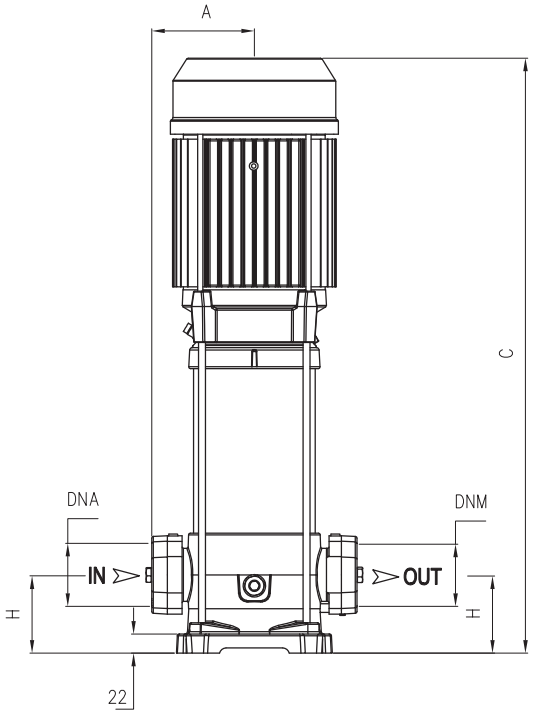

TYPE		DIMENSIONS (mm)														
1~	3~	A	C	D1	D2	E1	E2	G	H	DNA	DNM	I	L	M	1~	3~
P 9L-350/4	**P 9L-350/4T**	118	575	260	180	215	130	256	80	1" ½ G	1" ½ G	539	261	280	36	33,5
-	**P 9L-400/5T**	118	605	260	180	215	130	256	80			664	261	295	-	37
-	**P 9L-450/6T**	118	663	260	180	215	130	271	80			779	261	295	-	42
-	**P 9L-550/7T**	118	693	260	180	215	130	271	80			779	261	295	-	46,5
-	**P 9L-750/8T**	118	786	260	180	215	130	280	80			779	261	295	-	45,5
-	**P 18L-400/3T**	118	577	260	180	215	130	256	90	2" G	2" G	539	261	280	-	36,5
-	**P 18L-550/4T**	118	643	260	180	215	130	271	90			664	261	295	-	45,5
-	**P 18L-750/5T**	118	743	260	180	215	130	280	90			779	261	295	-	55
-	**P 18L-900/6T**	118	781	260	180	215	130	280	90			779	261	295	-	61

1~ 110V - 60Hz	
TYPE	I (A)
P 3...-120/4	13,8

LOTS				
MODEL	TRUCK		CONTAINER	
	PALLET (cm)	N° pumps	PALLET (cm)	N° pumps
P 3V-120/4(T)÷150/5(T)	80×120×150	42	80×120×175	49
P 3V-200/6T÷300/8T	80x120x150	42	80x120x175	49
P 3V-200/6÷300/8	80x120x155	30	80x120x180	35
P 5V-180/4(T)÷350/7(T)	80×120×150	42	80×120×175	49
P 5V-400/8T	80×120×155	30	80×120×180	35
P 7V-300/4(T)÷400/5T	80×120×150	42	80×120×175	49
P 7V-450/6T÷550/7T	85×110×140	20	85×110×170	24
P 7V-750/8T	85×110×150	20	85×110×150	20
P 9V-350/4(T)÷P 9V-400/5T	80×120×150	42	80×120×175	49
P 9V-450/6T÷550/7T	85×110×140	20	85×110×170	24
P 9V-750/8T	85×110×150	20	85×110×150	20
P 18V-400/3T÷550/4T	80×120×150	42	80×120×175	49
P 18V-750/5T÷900/6T	85×110×140	20	85×110×170	24

LOTS				
MODEL	TRUCK		CONTAINER	
	PALLET (cm)	N° pumps	PALLET (cm)	N° pumps
P 3L-120/4(T)÷150/5(T)	80×120×150	42	80×120×175	49
P 3L-200/6(T)÷300/8(T)	80×120×150	30	80×120×170	36
P 5L-180/4(T)÷250/5(T)	80×120×150	42	80×120×175	49
P 5L-300/6	80x120x150	30	80x120x170	35
P 5L-300/6T	80x120x150	42	80x120x175	49
P 5L-350/7T÷400/8T	80X120X150	30	80X120X170	35
P 7L-300/4	80x120x150	30	80x120x170	36
P 7L-300/4T	80x120x150	42	80x120x175	49
P 7L-400/5T	80x120x150	30	80x120x170	36
P 7L-450/6T÷550/7T	80x120x150	30	80x120x170	35
P 7L-750/8T	85x110x150	20	85x110x150	20
P 9L-350/4÷400/5T	80x120x155	25	80x120x185	30
P 9L-450/6T÷550/7T	85x110x150	20	85x110x125	24
P 9L-750/8T	85x110x150	20	85x110x125	24
P 18L-400/3T÷550/4T	80x120x155	30	80x120x185	35
P 18L-750/5T÷900/6T	85x110x150	20	85x110x150	20

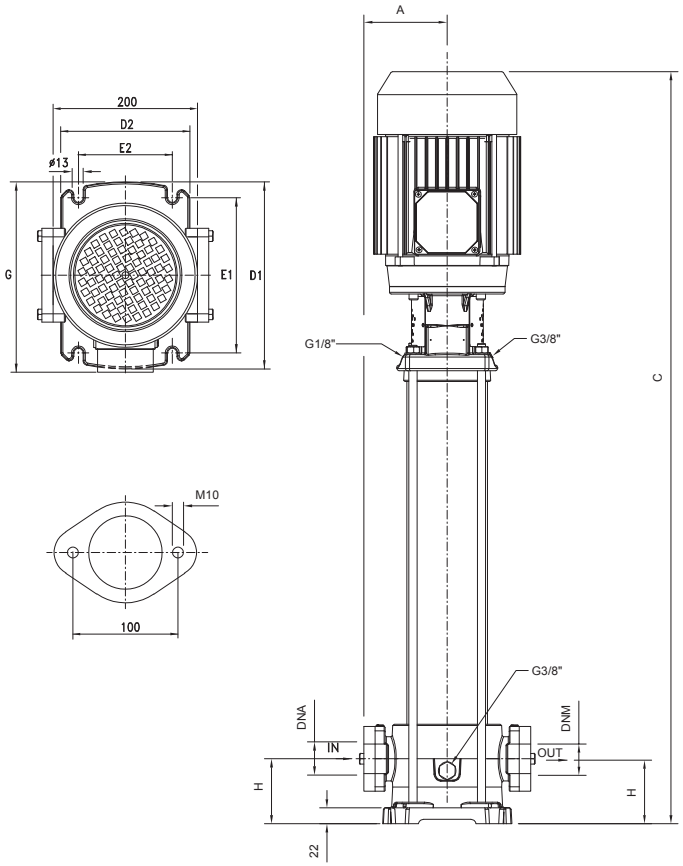

TYPE	DIMENSIONS (mm)													Kg
3~	A	C	D1	D2	E1	E2	G	H	DNA	DNM	I	L	M	
P 18LG-950/7T	118	908	260	180	215	130	308	90	2” G	2” G	1098	327	290	69,1

LOTS				
MODEL	TRUCK		CONTAINER	
	PALLET (cm)	N° pumps	PALLET (cm)	N° pumps
P 18LG-950/7T	100×120×150	12	100×120×150	12

PLUS SV/SL/SLX

Multistage Vertical

PLUS SV

PLUS 3-5-7 SL

PLUS 9-18 SL

PLUS SLX

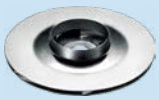

Stainless steel multistage vertical pumps. Pumping of clean non-loaded fluids, pressurizing system, irrigation, drinking and glycol water, water treatment, food industry, heating and air conditioning, washing system.

Construction features	
Pump body	cast iron (SV/SL); stainless steel AISI 304 (SLX)
Motor bracket	cast iron
Impellers, diffusers, shell, motor shaft	stainless steel AISI 304
Mechanical seal	ceramic-graphite-EPDM graphite-silicon carbide-EPDM
Intermediate shaft guiding stage bush	ceramic-tungsten carbide
Ambient temperature	max 40 °C
Liquid temperature	+5 ÷ 90 °C (SV) -15 ÷ 110 °C (SL/SLX)
Max operating pressure	8 bar ≤ 4 impellers; 14 bar ≥ 5 impellers
Pump body gasket	EPDM

Motor	
2 poles induction motor	3~ 220/380V - 60Hz 1~ 220V - 60Hz (with thermal protection up to 1,85 kW)
Insulation class	F
Protection degree	IPX4 IPX5 ≥ 4,5 HP

P 3 S V - 120 / 4 T

- **T** motor: 1~ / **T** 3~
- 4: No. of impellers
- V: **V** vertical axis, overlapped ports; **L** vertical axis, in-line ports; **LX** vertical axis, in-line ports, stainless steel pump body
- S: stainless steel hydraulic part
- 3: nominal flow-rate m^3/h
- P: pump type

More details of the mechanical seals are included on page 233

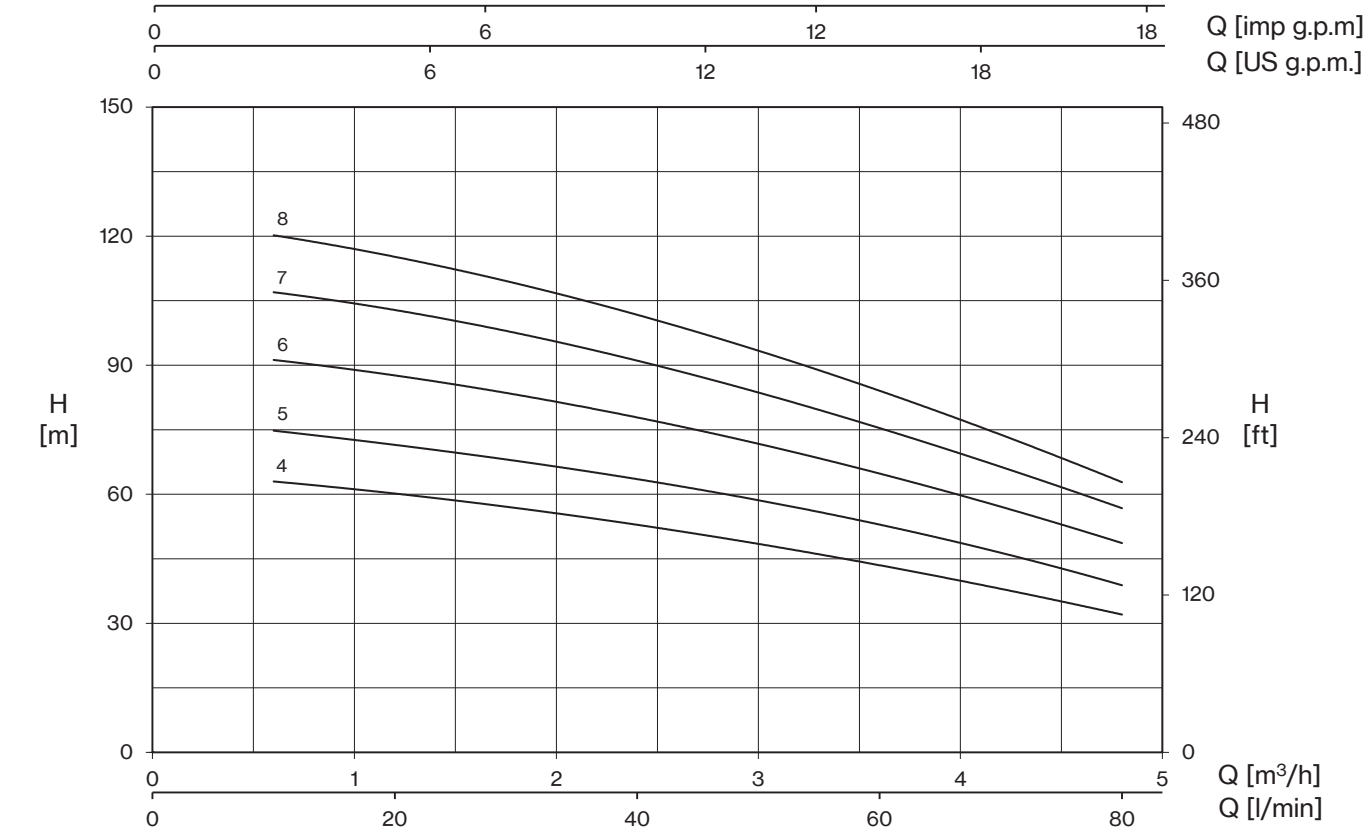

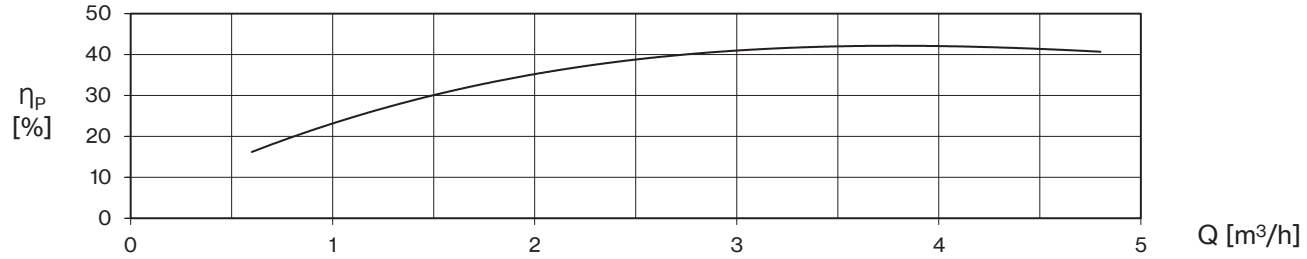

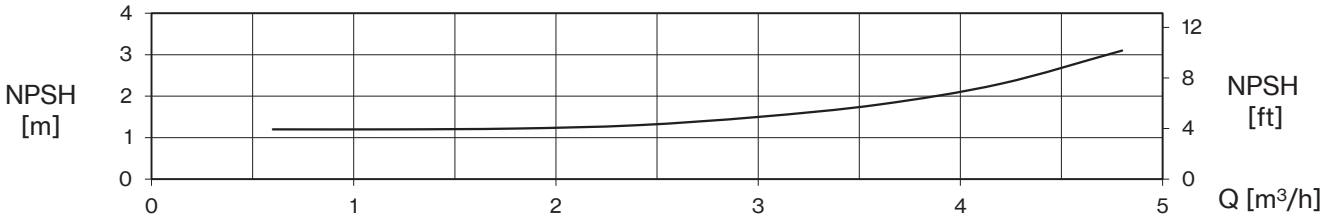

TYPE - 60 Hz		P2		P1		CURRENT		Q (m³/h - l/min)								
1~	3~			1~	3~	1~ 220V	3~ 380V	0	0,6	1,2	1,8	2,4	3	3,6	4,2	4,8
								0	10	20	30	40	50	60	70	80
		HP	kW	kW		A		H (m)								
P 3...-120/4	**P 3...-120/4T**	1,2	0,9	1,3	1,3	6,2	2,6	64,6	62,9	60,3	56,9	52,7	48,6	43,2	38,4	31,9
P 3...-150/5	**P 3...-150/5T**	1,8	1,3	1,6	1,6	7,7	3,4	76,9	74,8	71,5	67,8	63,4	58,8	52,8	46,5	38,8
P 3...-200/6	**P 3...-200/6T**	1,8	1,3	2,0	1,9	9,2	3,8	93,6	91,3	87,5	83,2	77,7	72,1	64,5	57,1	48,7
P 3...-250/7	**P 3...-250/7T**	2,5	1,84	2,3	2,1	10,8	4,1	109,9	107,0	102,7	97,6	90,9	84,1	75,0	66,5	56,8
P 3...-300/8	**P 3...-300/8T**	3	2,2	2,7	2,5	13,5	4,9	123,4	120,3	115,0	109,0	101,7	93,7	83,8	73,8	62,9

PLUS 5 SV/SL/SLX

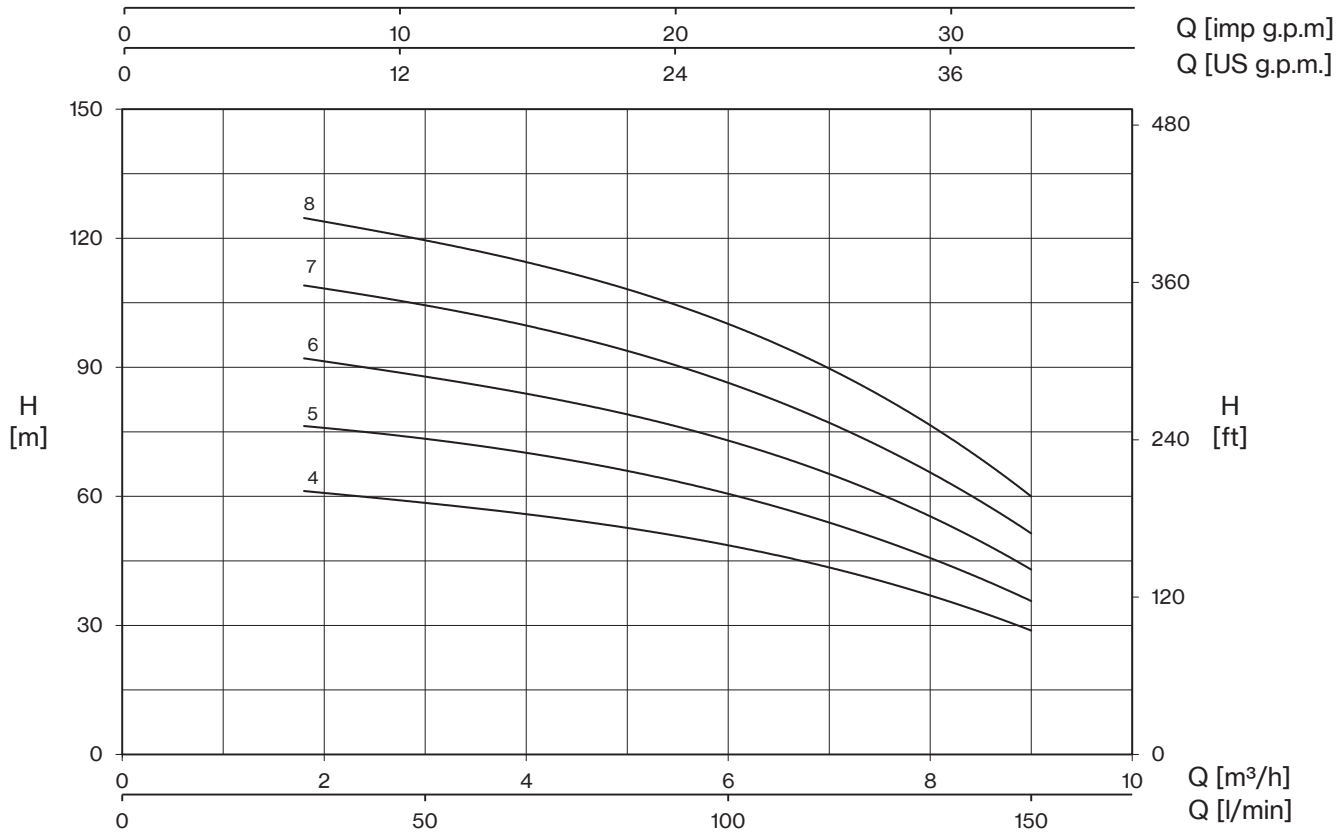

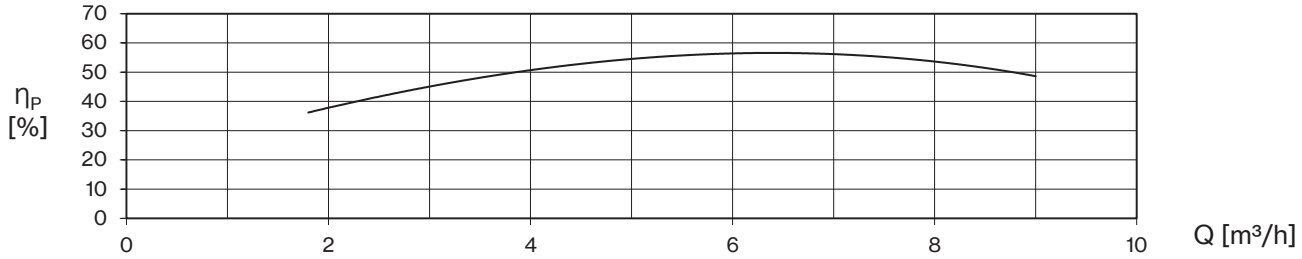

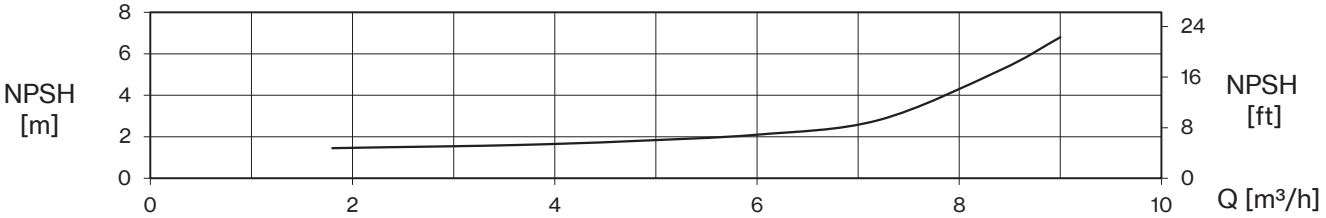

TYPE - 60 Hz		P2		P1		CURRENT		Q (m³/h - l/min)									
1~	3~			1~	3~	1~ 220V	3~ 380V	0	1,8	2,4	3,6	4,2	4,8	6	7,2	8,4	9
								0	30	40	60	70	80	100	120	140	150
		HP	kW	kW		A		H (m)									
P 5...-180/4	**P 5...-180/4T**	1,8	1,3	1,9	1,8	8,9	3,6	64,3	61,1	60,0	57,0	55,5	53,1	48,3	42,4	34,2	28,6
P 5...-250/5	**P 5...-250/5T**	2,5	1,84	2,4	2,2	11,1	4,3	80,2	76,4	74,9	71,2	70,2	66,5	60,5	52,4	41,9	35,7
P 5...-300/6	**P 5...-300/6T**	3	2,2	2,9	2,6	14,5	5,1	96,6	92,1	89,7	85,7	83,1	79,8	72,7	63,6	51,0	42,8
-	**P 5...-350/7T**	3,5	2,57	-	3,1	-	5,9	113,6	109,1	106,7	101,6	99,2	94,7	86,3	75,1	60,2	51,4
-	**P 5...-400/8T**	4	3	-	3,5	-	6,8	129,6	124,6	122,3	116,6	113,7	109,1	99,8	87,9	69,9	60,1

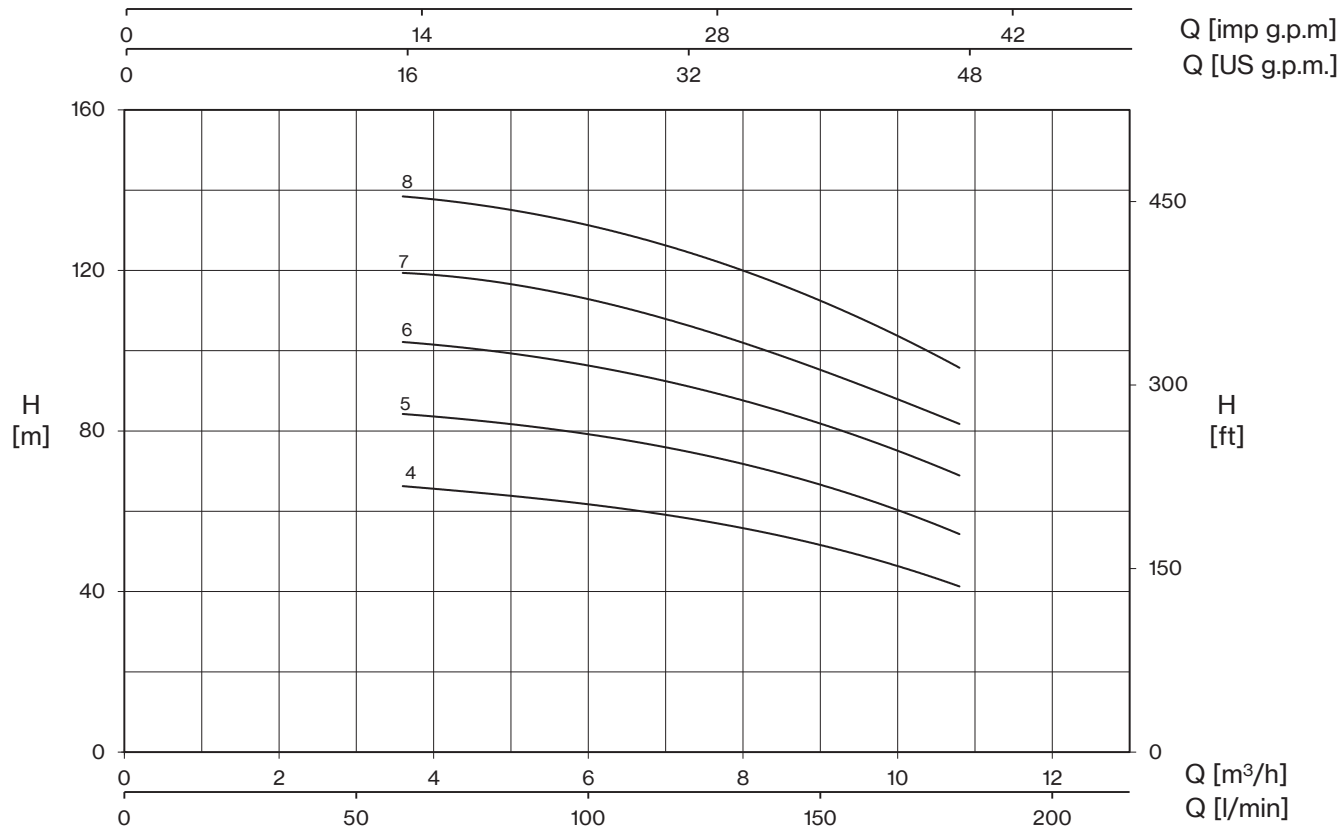

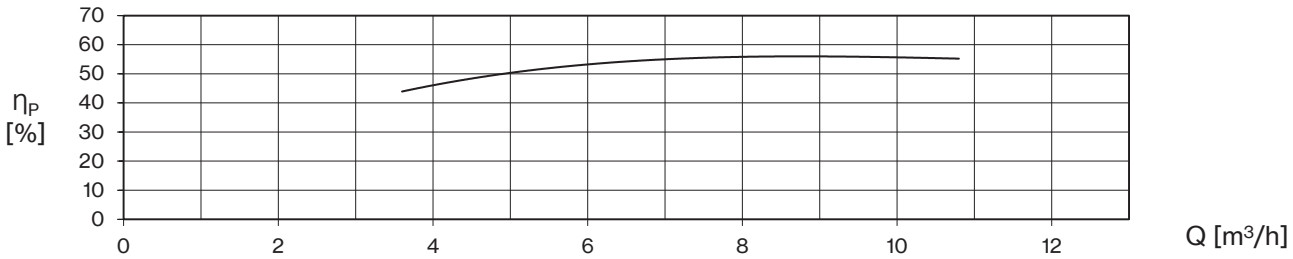

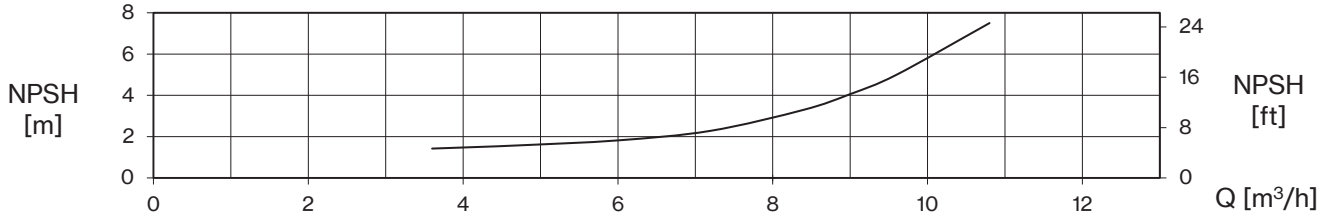

TYPE - 60 Hz		P2		P1		CURRENT		Q (m³/h - l/min)									
1~	3~			1~	3~	1~ 220V	3~ 380V	0	3,6	4,2	4,8	6	7,2	8,4	9	9,6	10,8
								0	60	70	80	100	120	140	150	160	180
		HP	kW	kW		A		H (m)									
P 7...-300/4	**P 7...-300/4T**	3	2,2	3,0	2,8	15,1	5,3	67,3	66,1	65,4	64,4	61,7	58,3	54,2	51,7	48,7	41,2
-	**P 7...-400/5T**	4	3	-	3,5	-	6,8	85,1	84,3	83,2	82,3	79,1	75,2	69,9	66,6	62,9	54,3
-	**P 7...-450/6T**	4,5	3,37	-	4,3	-	7,9	102,7	102,2	101,2	99,8	96,1	91,7	85,6	81,9	77,6	69,0
-	**P 7...-550/7T**	5,5	4	-	5,1	-	9,5	120,7	119,6	118,5	116,9	112,7	107,2	99,8	95,2	90,2	82,0
-	**P 7...-750/8T**	7,5	5,5	-	5,9	-	11,2	138,2	138,5	137,3	135,6	131,1	125,2	117,5	112,5	106,8	96,0

PLUS 9 SV/SL/SLX

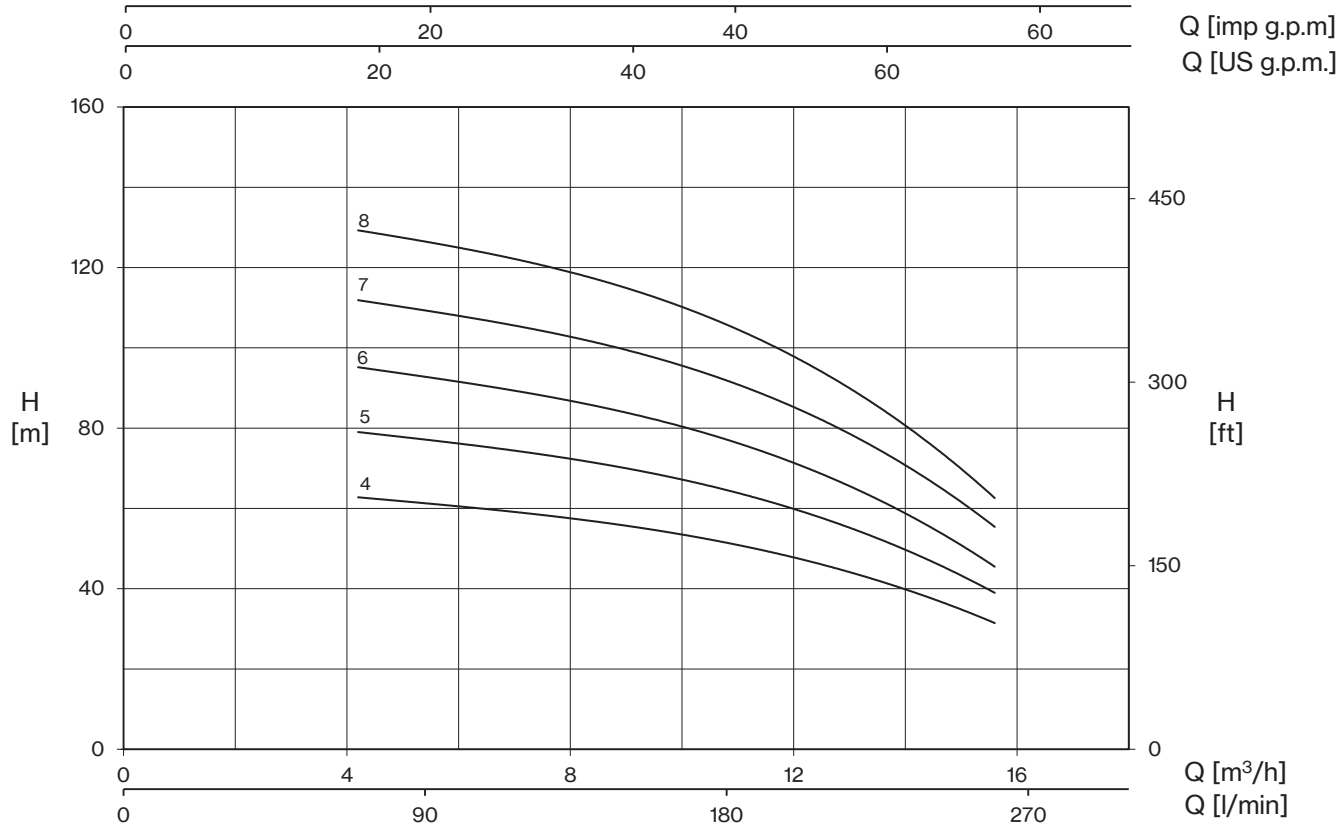

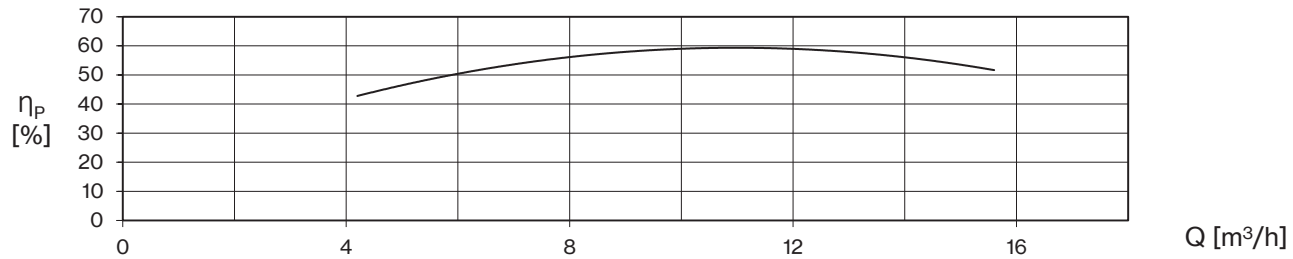

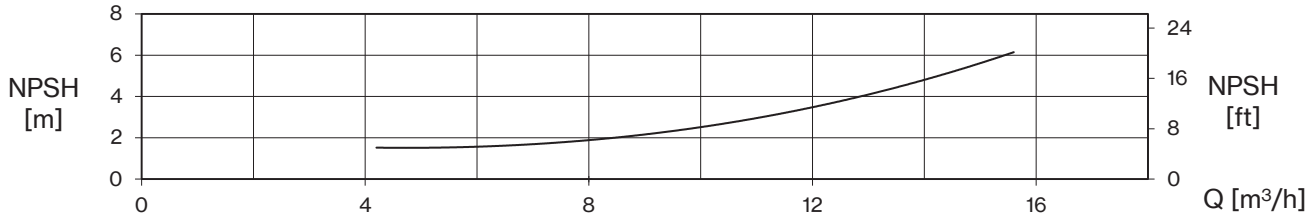

TYPE - 60 Hz		P2		P1		CURRENT		Q (m³/h - l/min)									
1~	3~			1~	3~	1~ 220V	3~ 380V	0	4,2	6	8,4	9,6	11,4	12	13,2	14,4	15,6
								0	70	100	140	160	190	200	220	240	260
		HP	kW	kW		A		H (m)									
P 9...-350/4	**P 9...-350/4T**	3,5	2,57	3,3	3,2	16,1	6,0	66,5	62,6	60,7	56,7	54,3	49,7	47,9	43,5	37,8	31,5
-	**P 9...-400/5T**	4	3	-	3,8	-	7,2	83,6	78,9	76,4	71,3	68,2	62,5	60,0	54,1	47,0	39,1
-	**P 9...-450/6T**	4,5	3,37	-	4,6	-	8,5	100,6	94,8	92,0	85,4	81,8	74,4	71,2	64,4	55,9	45,3
-	**P 9...-550/7T**	6	4,4	-	5,4	-	9,9	118,0	111,6	108,3	101,2	97,2	89,0	85,5	76,9	66,8	55,6
-	**P 9...-750/8T**	7,5	5,5	-	6,3	-	11,7	135,5	128,9	125,4	116,9	112,1	102,5	98,3	87,9	75,9	62,9

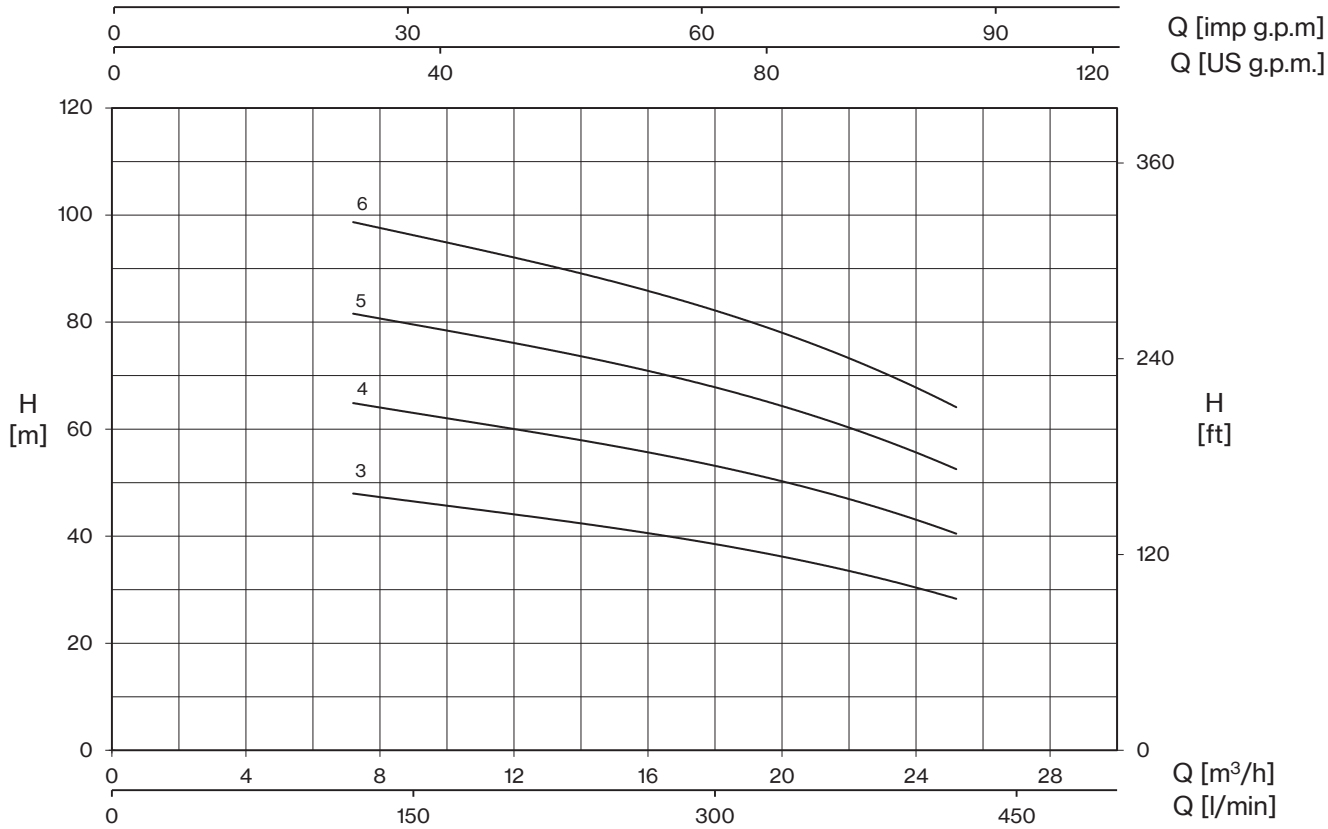

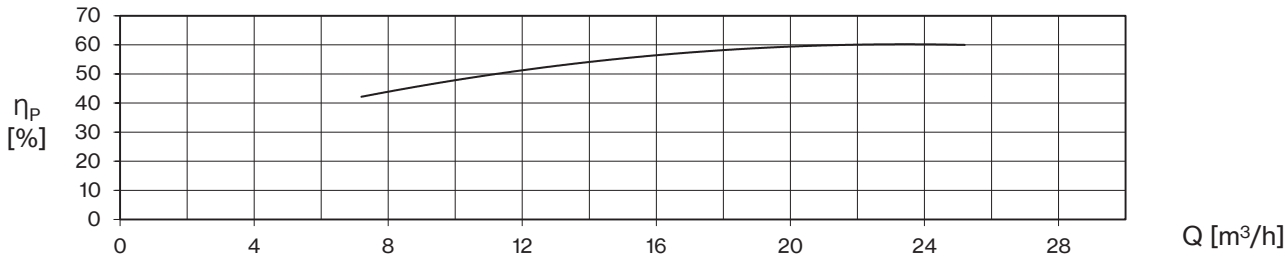

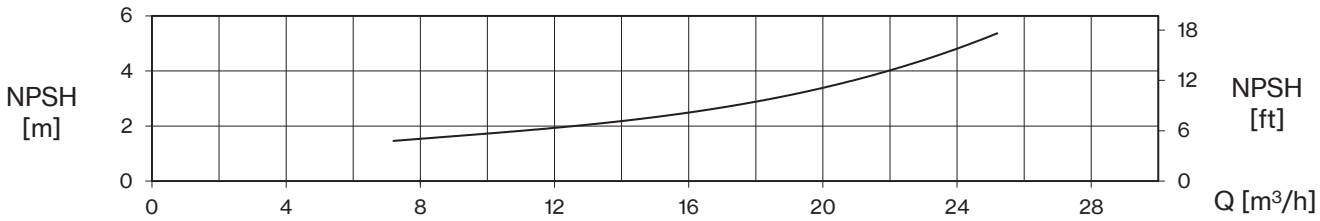

TYPE - 60 Hz	P2		P1	CURRENT	Q (m³/h - l/min)								
3~				3~ 380V	0	7,2	9,6	12	14,4	16,8	20,4	22,8	25,2
					0	120	160	200	240	280	340	380	420
	HP	kW	kW	A	H (m)								
P 18...-400/3T	4,5	3,37	4,0	7,4	50,2	47,8	46,1	44,1	42,0	39,6	35,9	32,6	28,1
P 18...-550/4T	6	4,4	5,5	10,1	67,2	64,6	62,6	60,1	57,4	54,5	49,9	45,9	40,2
P 18...-750/5T	7,5	5,5	6,8	12,6	84,4	81,3	79,0	76,1	73,0	69,5	63,7	58,9	52,3
P 18...-900/6T	10	7,5	8,2	15,2	101,9	98,4	95,6	92,1	88,5	84,1	77,2	71,9	63,7

PLUS SV

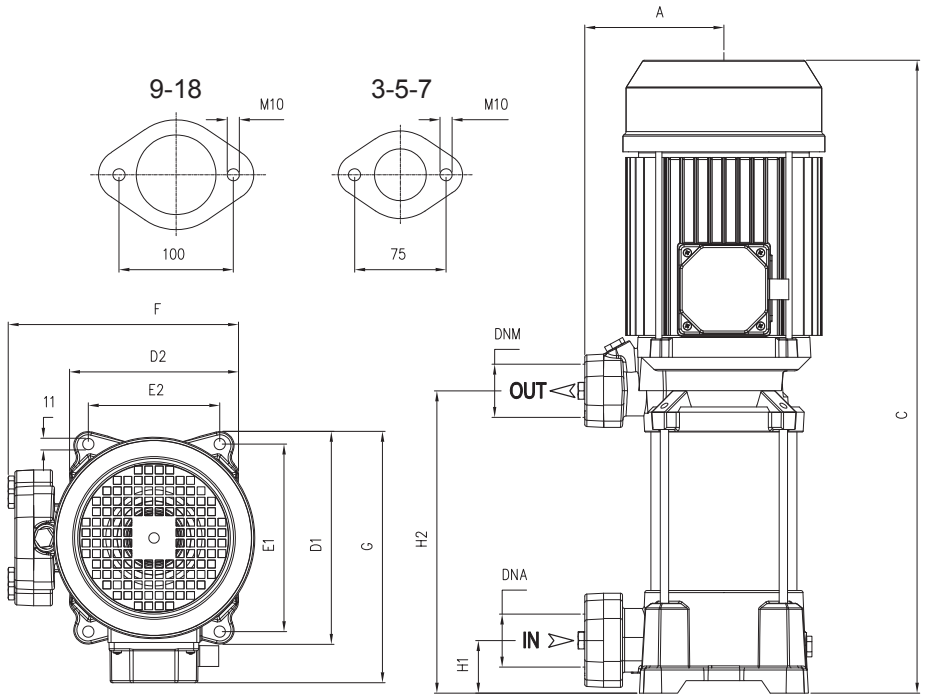

TYPE		DIMENSIONS (mm)															Kg	
1~	3~	A	C	D1	D2	E1	E2	F	G	H1	H2	DNA	DNM	I	L	M	1~	3~
P 3SV-120/4	**P 3SV-120/4T**	135	389	204	162	178,5	125	229	213	40	178			580	231	235	18,5	18,5
P 3SV-150/5	**P 3SV-150/5T**	135	473	204	162	178,5	125	229	213	40	202			580	231	235	25,5	25,5
P 3SV-200/6	**P 3SV-200/6T**	135	497	204	162	178,5	125	229	220	40	226	1" ¼ G	1" ¼ G	580	231	235	24,5	24,5
P 3SV-250/7	**P 3SV-250/7T**	135	521	204	162	178,5	125	229	220	40	250			580	231	235	23,5	24,5
P 3SV-300/8	**P 3SV-300/8T**	135	555	204	162	178,5	125	229	220	40	274			580	231	235	33,5	26
P 5SV-180/4	**P 5SV-180/4T**	135	449	204	162	178,5	125	229	220	40	178			580	231	235	23,5	25
P 5SV-250/5	**P 5SV-250/5T**	135	473	204	162	178,5	125	229	220	40	202			580	231	235	25	24
P 5SV-300/6	**P 5SV-300/6T**	135	552 T 497	204	162	178,5	125	229	228 T 220	40	226	1" ¼ G	1" ¼ G	580	231	235	32	26
-	**P 5SV-350/7T**	135	576	204	162	178,5	125	229	228	40	250			650	246	246	-	30
-	**P 5SV-400/8T**	135	600	204	162	178,5	125	229	228	40	274			650	246	246	-	33,5
P 7SV-300/4	**P 7SV-300/4T**	135	504 T 449	204	162	178,5	125	229	228 T 220	40	178			580	231	235	31,5	25
-	**P 7SV-400/5T**	135	528	204	162	178,5	125	229	228	40	202			580	231	235	-	31,5
-	**P 7SV-450/6T**	135	580	204	162	178,5	125	229	243	40	226	1" ¼ G	1" ¼ G	779	261	295	-	37,5
-	**P 7SV-550/7T**	135	604	204	162	178,5	125	229	243	40	250			779	261	295	-	42,5
-	**P 7SV-750/8T**	135	691	204	162	178,5	125	229	253	40	274			909	274	303	-	52
P 9SV-350/4	**P 9SV-350/4T**	135	528	204	162	178,5	125	229	228	40	202			580	231	235	31,5	28,5
-	**P 9SV-400/5T**	135	558	204	162	178,5	125	229	228	40	232			580	231	235	-	32,5
-	**P 9SV-450/6T**	135	616	204	162	178,5	125	229	243	40	262	1" ½ G	1" ¼ G	779	261	295	-	38
-	**P 9SV-550/7T**	135	646	204	162	178,5	125	229	243	40	292			779	261	295	-	43
-	**P 9SV-750/8T**	135	739	204	162	178,5	125	229	253	40	322			909	274	303	-	52,5
-	**P 18SV-400/3T**	135	536	204	162	178,5	125	229	228	50	211			580	231	235	-	32,5
-	**P 18SV-550/4T**	135	602	204	162	178,5	125	235	243	50	248	2" G	1" ½ G	580	231	235	-	42
-	**P 18SV-750/5T**	135	703	204	162	178,5	125	255	253	50	289			779	261	295	-	52
-	**P 18SV-900/6T**	135	740	204	162	178,5	125	255	253	50	326			779	261	295	-	59

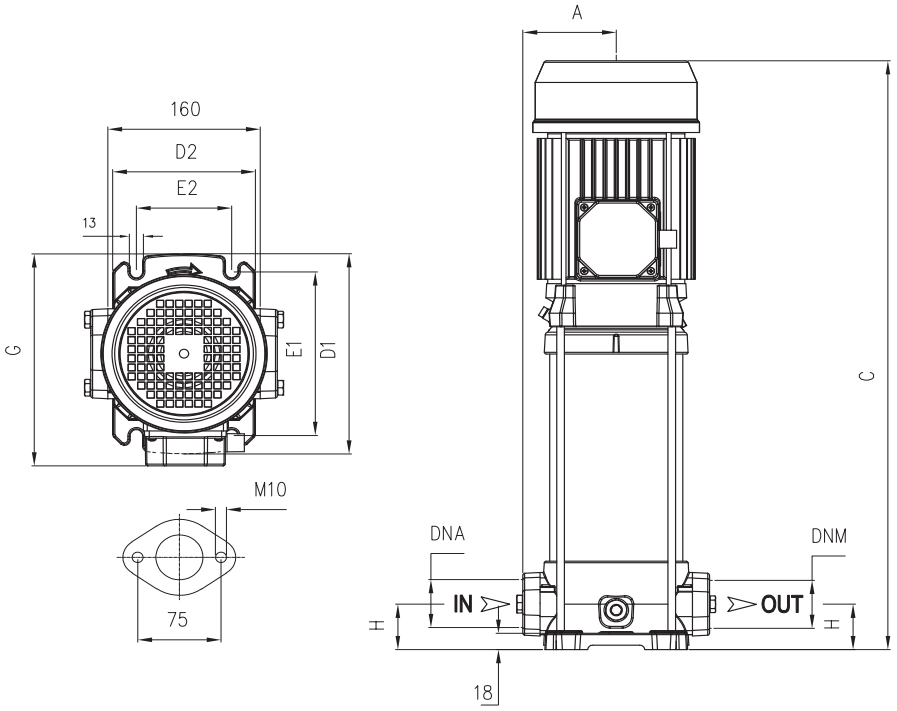

TYPE		DIMENSIONS (mm)													Kg			
															SL		SLX	
1~	3~	A	C	D1	D2	E1	E2	G	H	DNA	DNM	I	L	M	1~	3~	1~	3~
P 3...-120/4	**P 3...-120/4T**	98	405	220	150	180	100	228	50			580	231	235	20	20	19	19
P 3...-150/5	**P 3...-150/5T**	98	489	220	150	180	100	228	50			580	231	235	27,5	27,5	26,5	26,5
P 3...-200/6	**P 3...-200/6T**	98	513	220	150	180	100	228	50	1" ¼ G	1" ¼ G	539	261	280	26,5	26,5	25,5	25,5
P 3...-250/7	**P 3...-250/7T**	98	537	220	150	180	100	228	50			539	261	280	25,5	26,5	24,5	25,5
P 3...-300/8	**P 3...-300/8T**	98	571	220	150	180	100	228	50			664	261	295	36,5	29	35,5	28
P 5...-180/4	**P 5...-180/4T**	98	465	220	150	180	100	228	50			580	231	235	26	27	24,5	26
P 5...-250/5	**P 5...-250/5T**	98	489	220	150	180	100	228	50			580	231	235	27,5	26,6	26	25
P 5...-300/6	**P 5...-300/6T**	98	568 T 513	220	150	180	100	236 T 228	50	1" ¼ G	1" ¼ G	539 T 580	261 T 231	280 T 235	34,5	28	33,5	27
-	**P 5...-350/7T**	98	592	220	150	180	100	236	50			664	261	295	-	33	-	31,5
-	**P 5...-400/8T**	98	616	220	150	180	100	236	50			664	261	295	-	36,5	-	35,5
P 7...-300/4	**P 7...-300/4T**	98	520 T 465	220	150	180	100	236 T 228	50			539 T 580	261 231	280 235	33,5	27	32,5	26
-	**P 7...-400/5T**	98	544	220	150	180	100	236	50			539	261	280	-	34	-	33
-	**P 7...-450/6T**	98	596	220	150	180	100	251	50	1" ¼ G	1" ¼ G	664	261	295	-	39	-	38
-	**P 7...-550/7T**	98	620	220	150	180	100	251	50			664	261	295	-	44	-	43
-	**P 7...-750/8T**	98	707	220	150	180	100	260	50			909	274	303	-	54	-	53

PLUS SL/SLX

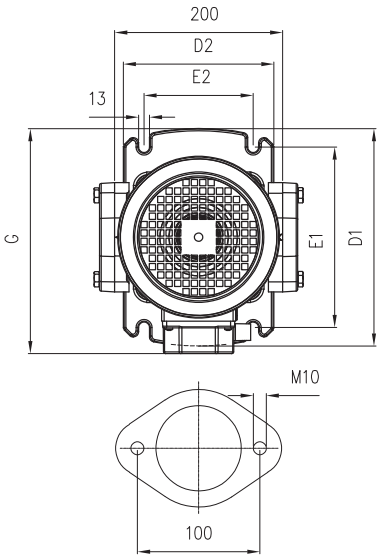

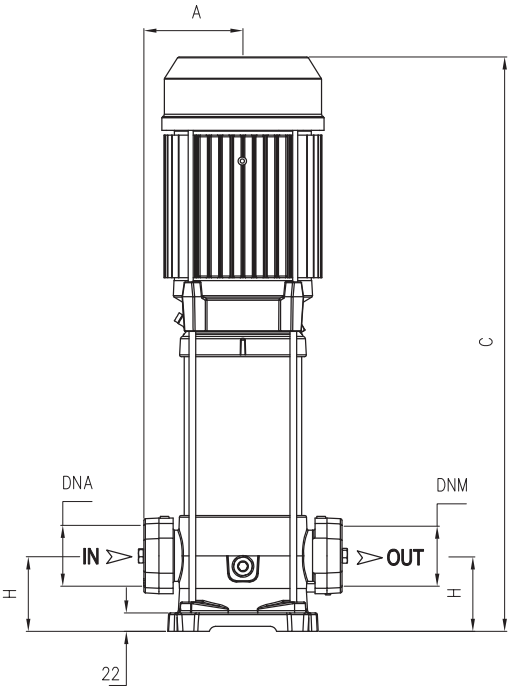

TYPE		DIMENSIONS (mm)																
															SL		SLX	
1~	3~	A	C	D1	D2	E1	E2	G	H	DNA	DNM	I	L	M	1~	3~	1~	3~
P 9...-350/4	**P 9...-350/4T**	118	575	260	180	215	130	256	80	1" ½ G	1" ½ G	539	261	280	37,5	34,5	36	33
-	**P 9...-400/5T**	118	605	260	180	215	130	256	80			664	261	295	-	39	-	37
-	**P 9...-450/6T**	118	663	260	180	215	130	271	80			779	261	295	-	43,5	-	42
-	**P 9...-550/7T**	118	693	260	180	215	130	271	80			779	261	295	-	48,5	-	47
-	**P 9...-750/8T**	118	786	260	180	215	130	280	80			779	261	295	-	58	-	56
-	**P 18...-400/3T**	118	577	260	180	215	130	256	90	2" G	2" G	539	261	280	-	37,5	-	36
-	**P 18...-550/4T**	118	643	260	180	215	130	271	90			664	261	295	-	47,5	-	46
-	**P 18...-750/5T**	118	743	260	180	215	130	280	90			779	261	295	-	57	-	55,5
-	**P 18...-900/6T**	118	781	260	180	215	130	280	90			779	261	295	-	63,5	-	62,5

1~ 110V - 60Hz	
TYPE	I (A)
P 3...-120/4	12,4

LOTS				
MODEL	TRUCK		CONTAINER	
	PALLET (cm)	N° pumps	PALLET (cm)	N° pumps
P 3SV-120/4(T)÷150/5(T)	80×120×150	42	80×120×175	49
P 3SV-200/6T÷300/8T	80x120x150	42	80x120x175	49
P 3SV-200/6÷300/8	80x120x155	30	80x120x180	35
P 5SV-180/4(T)÷350/7(T)	80×120×150	42	80×120×175	49
P 5SV-400/8T	80×120×155	30	80×120×180	35
P 7SV-300/4(T)÷400/5T	80×120×150	42	80×120×175	49
P 7SV-450/6T÷550/7T	85×110×140	20	85×110×170	24
P 7SV-750/8T	85×110×150	20	85×110×150	20
P 9SV-350/4(T)÷P 9SV 400/5T	80×120×150	42	80×120×175	49
P 9SV-450/6T÷550/7T	85×110×140	20	85×110×170	24
P 9SV-750/8T	85×110×150	20	85×110×150	20
P 18SV-400/3T÷550/4T	80×120×150	42	80×120×175	49
P 18SV-750/5T÷900/6T	85×110×140	20	85×110×170	24

LOTS				
MODEL	TRUCK		CONTAINER	
	PALLET (cm)	N° pumps	PALLET (cm)	N° pumps
P 3SL/SLX-120/4(T)÷150/5(T)	80x120x150	42	80x120x175	49
P 3SL/SLX-200/6(T)÷300/8(T)	80x120x150	30	80x120x170	36
P 5SL/SLX-180/4(T)÷250/5(T)	80x120x150	42	80x120x175	49
P 5SL/SLX-300/6	80x120x150	30	80x120x170	35
P 5SL/SLX-300/6T	80x120x150	42	80x120x175	49
P 5SL/SLX-350/7T÷400/8T	80x120x150	30	80x120x170	35
P 7SL/SLX-300/4	80x120x150	30	80x120x170	36
P 7SL/SLX-300/4T	80x120x150	42	80x120x175	49
P 7SL/SLX-400/5T	80x120x150	30	80x120x170	36
P 7SL/SLX-450/6T÷550/7T	80x120x150	30	80x120x170	35
P 7SL/SLX-750/8T	85x110x150	20	85x110x150	20
P 9SL/SLX-350/4÷400/5T	80x120x155	25	80x120x185	30
P 9SL/SLX-450/6T÷550/7T	85x110x150	20	85x110x125	24
P 9SL/SLX-750/8T	85x110x150	20	85x110x125	24
P 18SL/SLX-400/3T÷550/4T	80x120x155	30	80x120x185	35
P 18SL/SLX-750/5T÷900/6T	85x110x150	20	85x110x150	20

PLUS SLG/SLXG

Multistage Vertical

Stainless steel multistage vertical pumps. For non-loaded clean fluids, pressurizing system, irrigation, drinking and glycol water, water treatment, food industry, heating and air conditioning, washing system.

Construction features	
Pump body	cast iron (SLG); stainless steel AISI 304 (SLXG)
Motor bracket	cast iron
Impellers, diffusers, shell, motor shaft	stainless steel AISI 304
Mechanical seal	graphite-tungsten carbide-EPDM
Intermediate shaft guiding stage bush	ceramic-tungsten carbide
Ambient temperature	max 40 °C
Liquid temperature	-15 ÷ +110 °C
Max operating pressure	max 25 bar
Pump body gasket	EPDM

Motor	
2 poles induction motor	3~ 220/380V - 60Hz 1~ 220V - 60Hz IE2 efficiency class or standard
Insulation class	F
Protection degree	IPX5

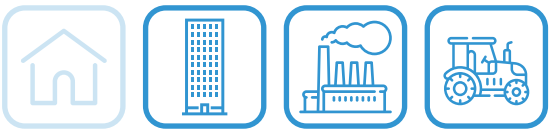

LOTS				
MODEL	TRUCK		CONTAINER	
	PALLET (cm)	N° pumps	PALLET (cm)	N° pumps
P 3SLG/SLXG-350/10T - 550/16T	100×120×150	12	100×120×150	12
P 5SLG/SLXG-450/10T - 750/14T	100×120×150	12	100×120×150	12
P 7SLG/SLXG-800/10T - 1000/14T	100×120×150	12	100×120×150	12
P 9SLG/SLXG-800/10T - 1000/14T	100×135×150	12	100×135×150	12

P 3 S LX G - 350 / 10 T

- **T** motor 3~
- No. of impellers
- coupling
- **L** vertical axis, in-line ports
- **LX** vertical axis, in-line ports, stainless steel pump body
- stainless steel hydraulic part
- nominal flow-rate m³/h
- pump type

PLUS 3-5-7-9 SLG

PLUS 3-5-7 SLXG

PLUS 9 SLXG

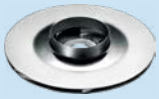

PLUS 3 SLG/SLXG

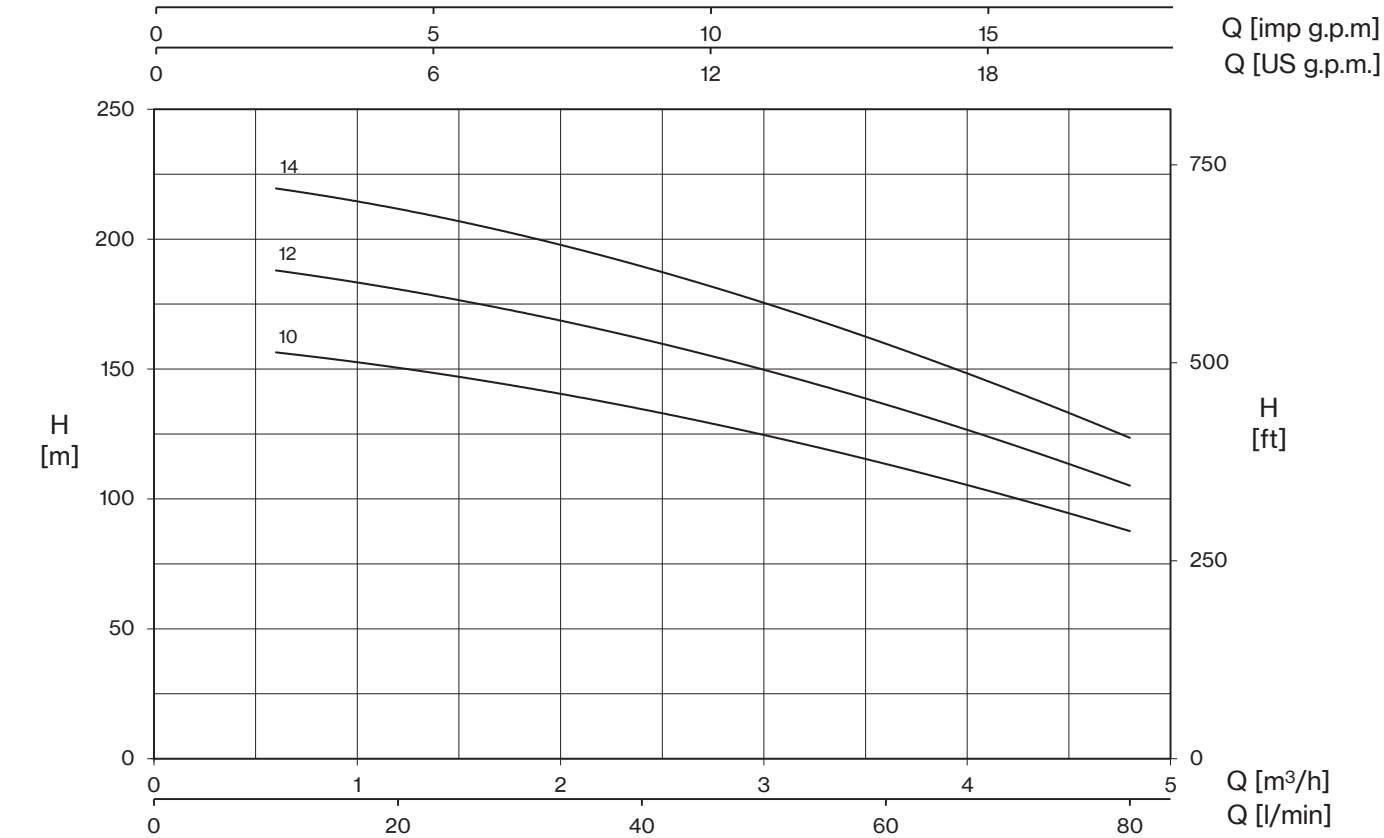

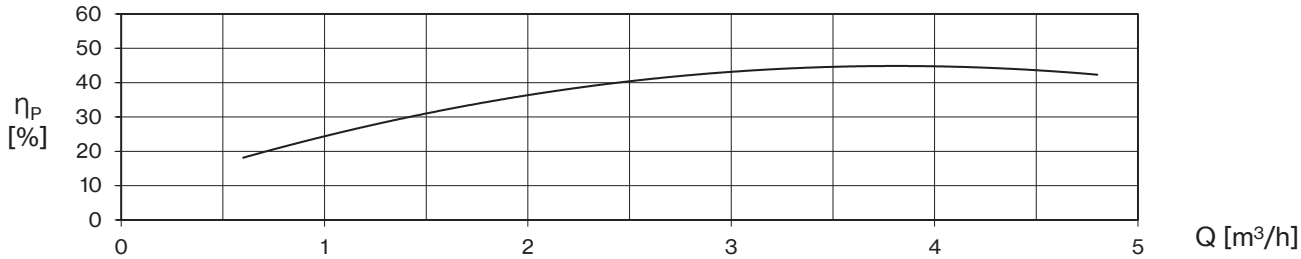

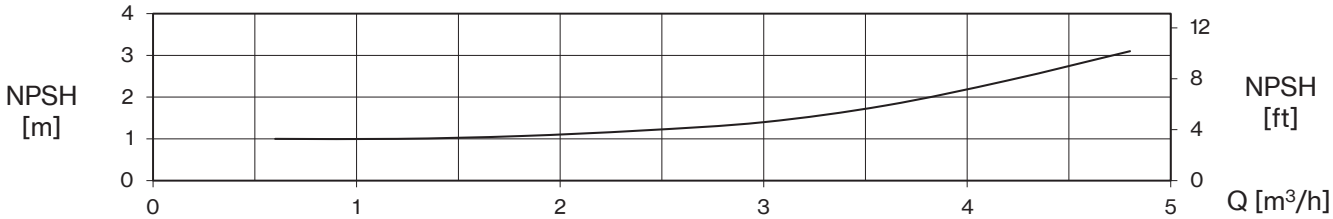

TYPE - 60 Hz	P2		P1	CURRENT	Q (m³/h - l/min)								
3~				3~ 380V	0	0,6	1,2	1,8	2,4	3	3,6	4,2	4,8
					0	10	20	30	40	50	60	70	80
	HP	kW	kW	A	H (m)								
P 3...350/10T	4	3	3,1	6,1	159,5	156,4	150,4	143,2	134,6	124,6	113,4	101,1	87,6
P 3...400/12T	4	3	3,6	6,9	191,7	188,1	180,5	172,0	161,7	149,7	136,3	121,4	105,2
P 3...450/14T	5,5	4	4,3	8,3	223,8	219,7	211,4	201,6	189,8	175,5	159,6	142,3	123,6

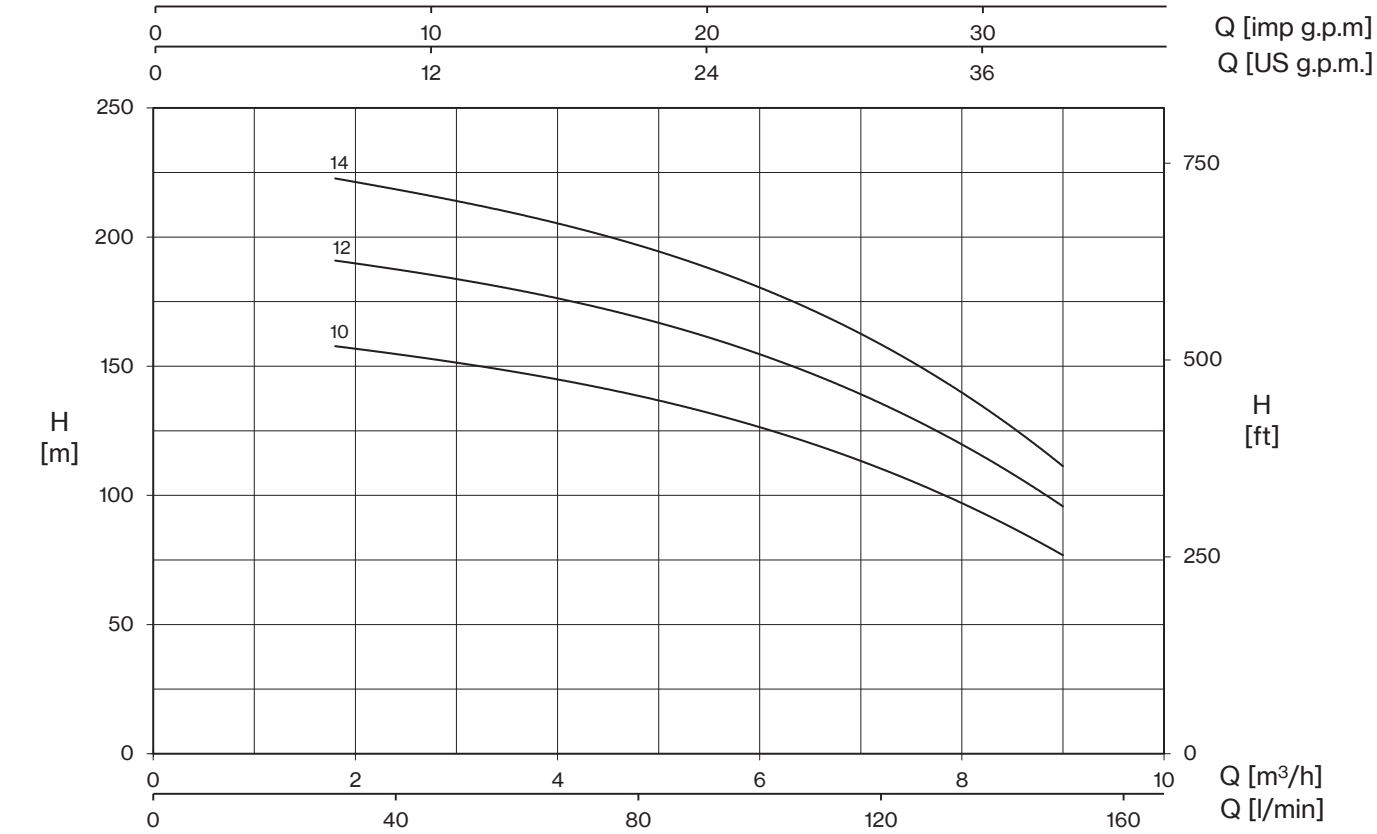

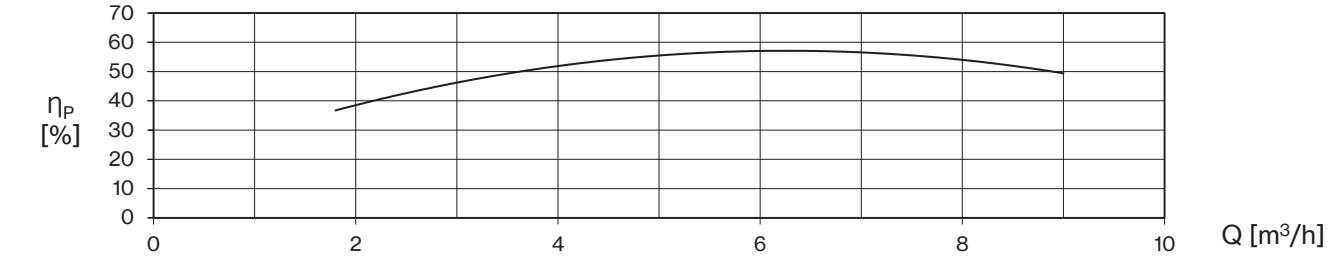

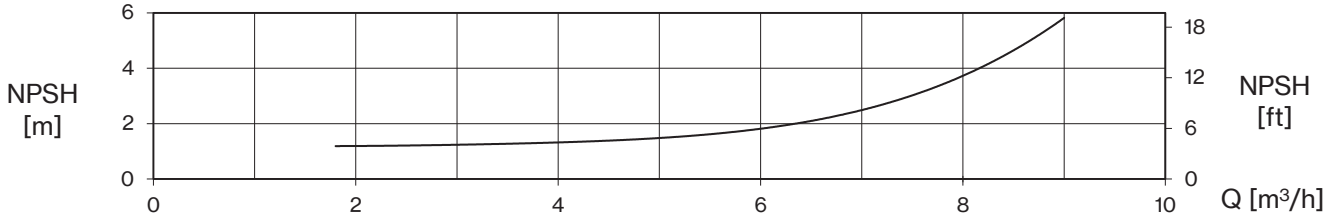

TYPE - 60 Hz	P2		P1	CURRENT	Q (m³/h - l/min)									
3~				3~ 380V	0	1,8	2,4	3,6	4,2	4,8	6	7,2	8,4	9
					0	30	40	60	70	80	100	120	140	150
	HP	kW	kW	A	H (m)									
P 5...450/10T	5,5	4	4,4	8,5	163,4	157,8	154,5	147,8	143,8	138,1	126,0	110,7	89,5	76,7
P 5...550/12T	7,5	5,5	5,4	10,7	197,0	190,8	187,6	179,4	175,4	168,4	154,3	135,8	111,0	95,5
P 5...750/14T	7,5	5,5	6,2	11,6	229,9	222,5	218,4	209,3	203,5	196,4	179,9	158,8	129,8	110,8

PLUS 7 SLG/SLXG

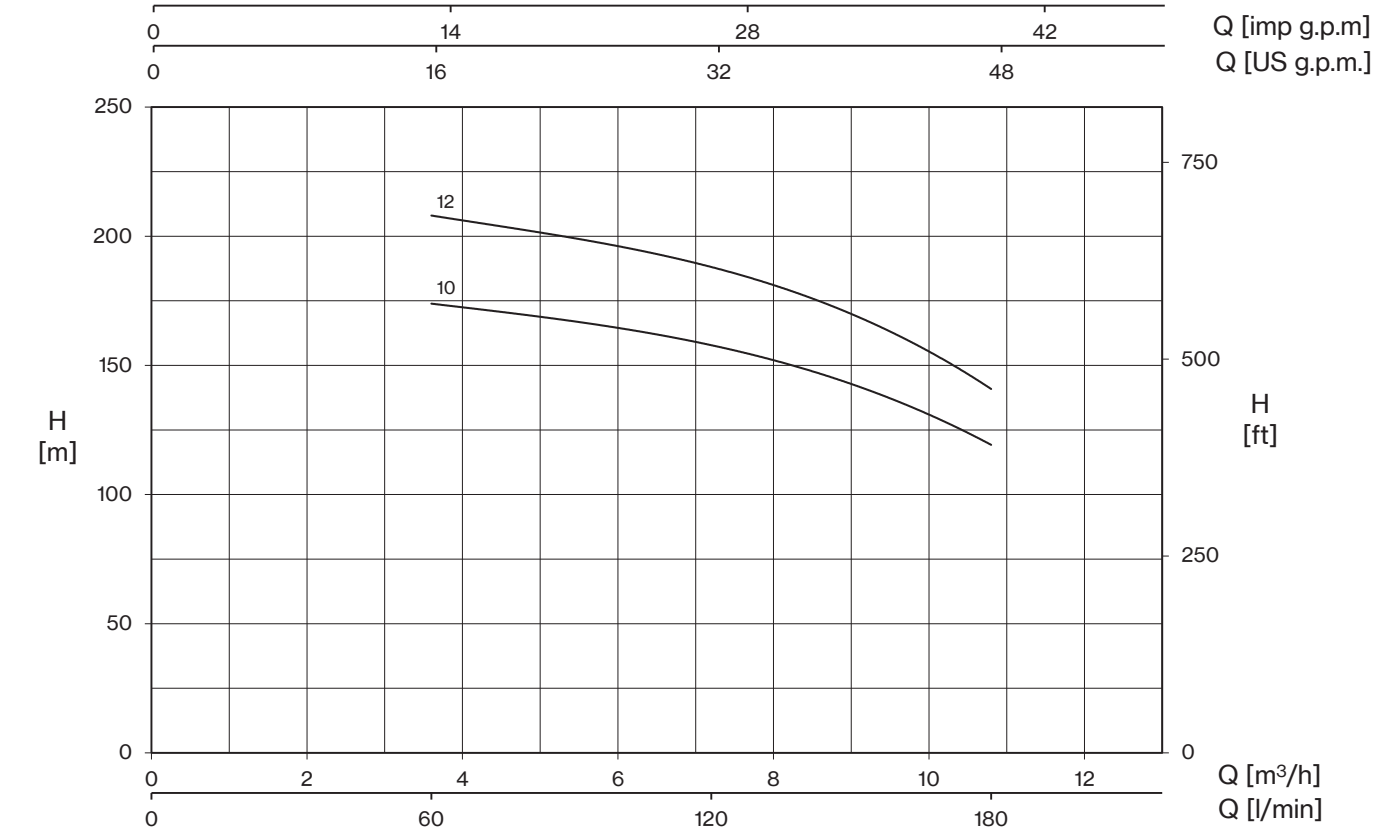

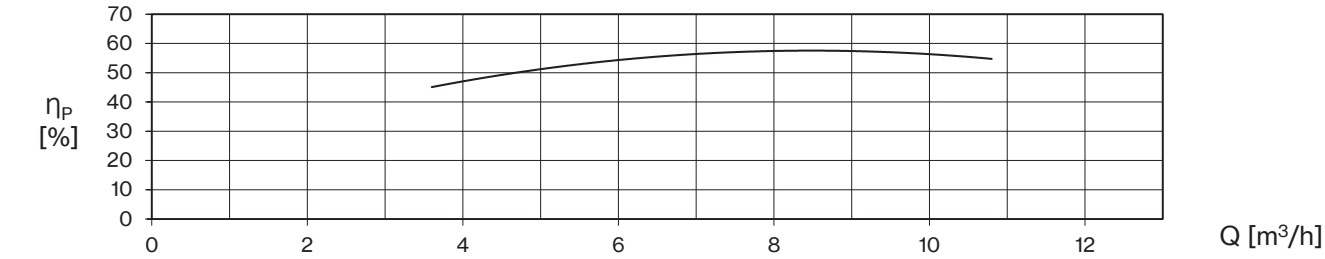

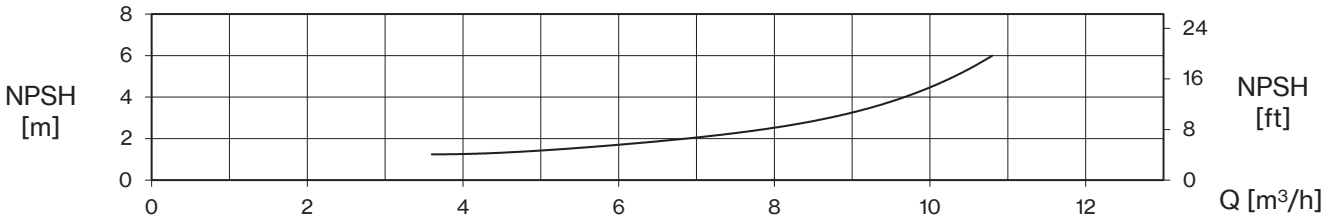

TYPE - 60 Hz	P2		P1	CURRENT	Q (m³/h - l/min)									
3~				3~ 380V	0	3,6	4,2	4,8	6	7,2	8,4	9	9,6	10,8
					0	60	70	80	100	120	140	150	160	180
	HP	kW	kW	A	H (m)									
P 7...800/10T	10	7,5	7,1	14,0	172,4	173,3	172,2	170,2	164,5	157,0	147,4	145,1	135,6	119,0
P 7...900/12T	10	7,5	8,4	15,8	206,6	207,3	205,7	203,2	196,1	187,1	175,4	173,0	160,9	140,6

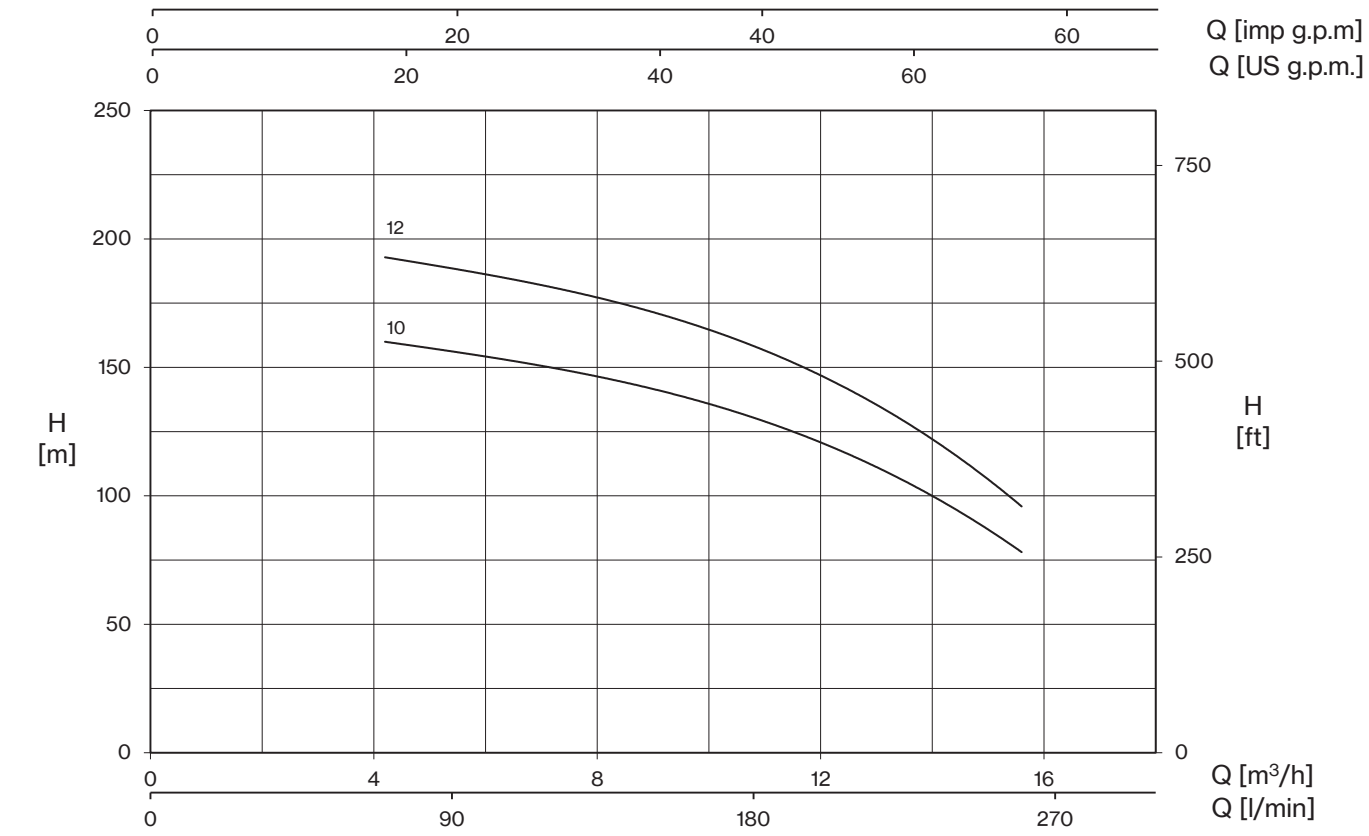

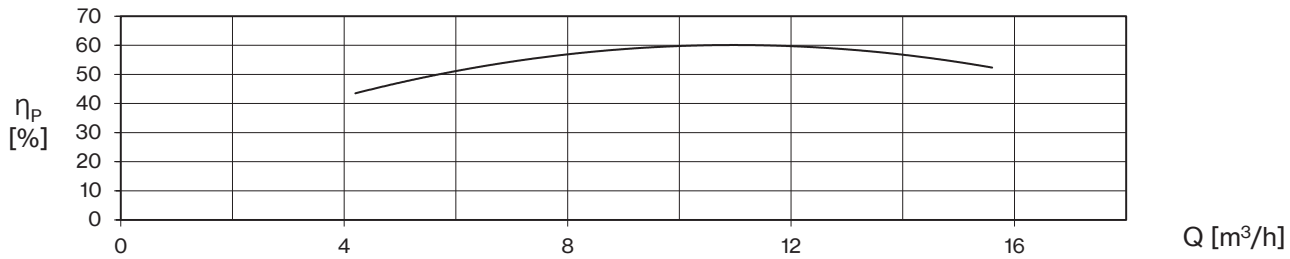

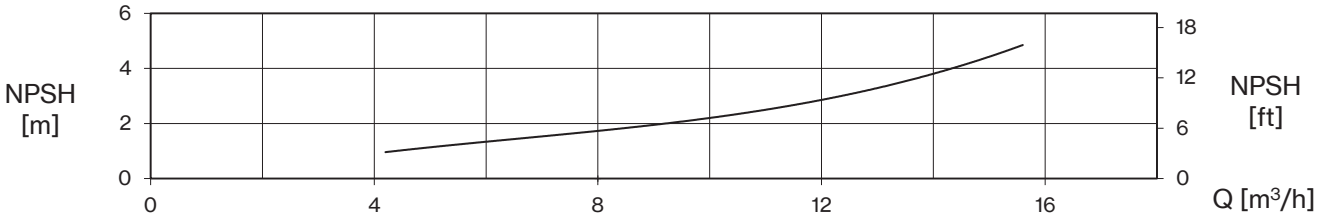

TYPE - 60 Hz	P2		P1	CURRENT	Q (m³/h - l/min)									
3~				3~ 380V	0	4,2	6	8,4	9,6	11,4	12	13,2	14,4	15,6
					0	70	100	140	160	190	200	220	240	260
	HP	kW	kW	A	H (m)									
P 9...800/10T	10	7,5	7,5	13,8	169,5	159,5	155,1	144,2	137,9	126,2	121,1	109,2	94,5	78,2
P 9...900/12T	10	7,5	8,9	16,5	203,7	192,3	187,2	174,5	167,1	153,4	147,3	132,9	115,5	96,0

P 3-5-7 SLG/SLXG

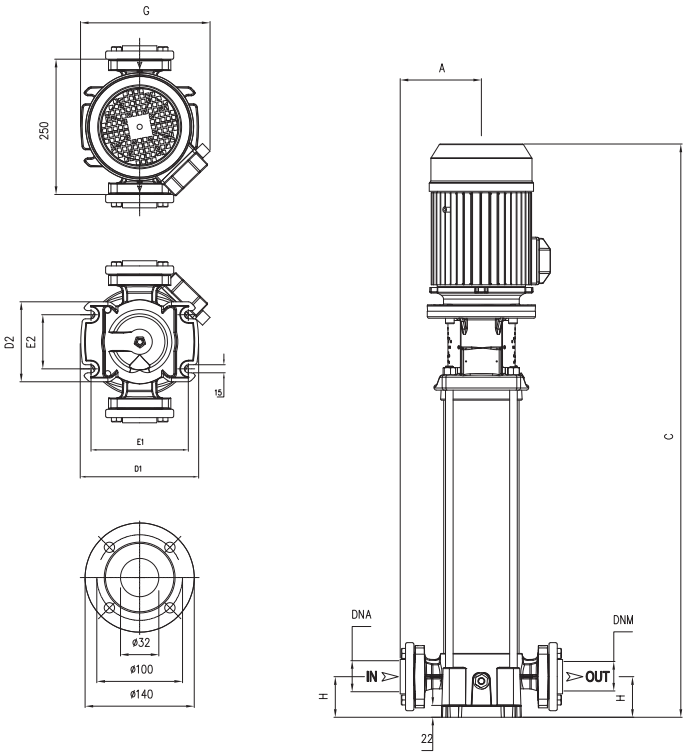

P 9 SLG/SLXG

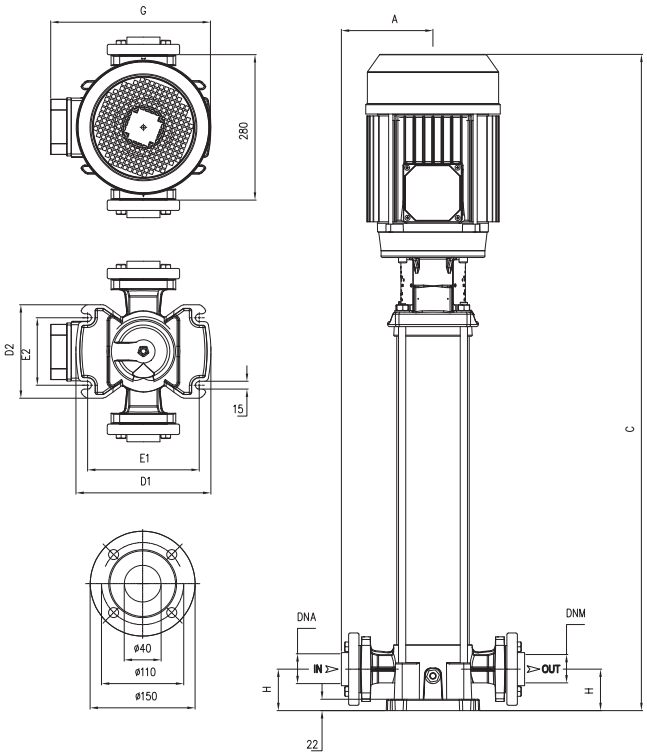

TYPE	DIMENSIONS (mm)													Kg	
3~	A	C	D1	D2	E1	E2	G	H	DNA	DNM	I	L	M	SLG	SLXG
P 3SLG-350/10T	155	833	220	150	180	100	236	75	1" ¼ G	1" ¼ G	1098	327	290	54	
P 3SLG-400/12T	155	881	220	150	180	100	236	75						55,5	
P 3SLG-450/14T	155	951	220	150	180	100	251	75						64,5	
P 3SLXG-350/10T	155	833	260	180	215	130	236	75						53,5	
P 3SLXG-400/12T	155	881	260	180	215	130	236	75						55	
P 3SLXG-450/14T	155	951	260	180	215	130	251	75						64	
P 5SLG-450/10T	155	855	220	150	180	100	251	75	1" ¼ G	1" ¼ G	1098	327	290	61,5	
P 5SLG-550/12T	155	903	220	150	180	100	251	75						70	
P 5SLG-750/14T	155	1000	220	150	180	100	260	75						72	
P 5SLXG-450/10T	155	855	260	180	215	130	251	75						61	
P 5SLXG-550/12T	155	903	260	180	215	130	251	75						70	
P 5SLXG-750/14T	155	1000	260	180	215	130	260	75						71,5	
P 7SLG-800/10T	155	904	220	150	180	100	260	75	1" ¼ G	1" ¼ G	1098	327	290	73,5	
P 7SLG-900/12T	155	989	220	150	180	100	260	75						75	
P 7SLXG-800/10T	155	904	260	180	215	130	260	75						73	
P 7SLXG-900/12T	155	989	260	180	215	130	260	75						75	
P 9...-800/10T	170	979	260	180	215	130	280	80	1" ½ G	1" ½ G	1310	325	380	78	76
P 9...-900/12T	170	1076	260	180	215	130	308	80						80	78

PLUS V-SV-L-SL-LG-SLG Serie-Mechanical seal and bearings

MECHANICAL SEAL	PUMP MODEL	SHAFT		STANDARD MATERIAL	OPTIONAL
	P3-120/4, P5-180/4, P7-300/4, P9-350/4, P18-400/3, P18-550/4	14mm / S	***Rotating face*** ***Stationary face*** ***Elastomer***	Graphite Ceramic EPDM	SiC SiC EPDM
	P3-150/5, P3-200/6, P3-250/7, P3-300/8, P5-250/5, P5-300/6, P5-350/7, P5-400/8, P7-400/5, P7-450/6, P7-550/7, P9-400/5, P9-450/6, P9-550/7, P9-750/8	14mm	***Rotating face*** ***Stationary face*** ***Elastomer***	Graphite SiC EPDM	SiC SiC EPDM
	P18-750/5, P18-900/6, P18-950/7, P18-1000/8	14mm / L	***Rotating face*** ***Stationary face*** ***Elastomer***	Graphite SiC EPDM	SiC SiC EPDM
	P3-350/10, P3-400/12, P3-450/14, P3-550/16, P5-450/10, P5-550/12, P5-750/14, P7-800/10, P7-900/12, P7-1000/14, P9-800/10, P9-900/12, P9-1000/14	14mm / Balanced seal	***Rotating face*** ***Stationary face*** ***Elastomer***	Tungsten carbide Graphite EPDM	- - -

BEARINGS	PUMP MODEL	TYPE	
	P3-120/4	6202-ZZ	6302-ZZ C3
	P3-150/5, P3-200/6, P3-250/7, 3~ P3-300/8, P5-180/4, P5-250/5, 3~ P5-300/6, 3~ P7-300/4	6203-ZZ	6304-ZZ C3
	1~ P3-300/8, P3-350/10, P3-400/12, 1~ P5-300/6, P5-350/7, P5-400/8, 1~ P7-300/4, P7-400/5, P9-350/4, P9-400/5, P18-400/3	6203-ZZ	6305-ZZ C3
	P7-450/6, P7-550/7, P9-450/6, P9-550/7, P18-550/4	6204-ZZ	6306-ZZ-C3
	P3-450/14, P3-550/16, P5-450/10	6204-ZZ	3206-ZZ C3
	P5-550/12, P5-750/14, P7-750/8, P7-800/10, P7-900/12, P9-750/8, P9-800/10, P9-900/12, P18-750/5, P18-900/6	6206-ZZ C3	3306-ZZ C3
	P7-1000/14, P9-1000/14, P18-950/7, P18-1000/8	6206-ZZ C3	3308-ZZ C3

PLUS HX

Multistage Vertical

Stainless steel multistage vertical pumps. Suitable for clean non-loaded fluids, pressurizing system, irrigation, drinking and glycol water, water treatment, food industry, heating and air conditioning, washing system.

Construction features	
Pump body	EN 1.4401 / AISI 316
Motor bracket	cast iron
Seal Plate Housing	EN 1.4401 / AISI 316
Impellers, diffusers, shell, pump shaft	EN 1.4401 / AISI 316
Mechanical seal	silicon carbide-graphite-EPDM
Intermediate bush	tungsten carbide
Ambient temperature	max 40° C
Liquid temperature	-15 ÷ +120 °C (Max 85° for domestic use)
Max operating pressure	26 bar
Pump body gasket	EPDM

Motor	
2 poles induction motor	3~ 220/380V - 60Hz P 4kW, size B14 V1 3~ 380/660V - 60Hz P > 4kW, size B5 V1 IE3 efficiency class
Insulation class	F
Protection degree	IP55

P 18 H X - 200 / 1 T -2

- mech. seal and O-rings
  - SiC-Graphite-EPDM
  - **V** SiC-Graphite-FKM
  - **2E** SiC-SiC-EPDM
  - **2V** SiC-SiC-FKM
- motor **T** 3~
- No. of impellers
- nominal power HP×100
- AISI 316 impellers, diffusers and pump body
- vertical axis, in-line ports, coupling
- nominal flow-rate m³/h
- pump type

More details of the mechanical seals are included on page 251

TYPE - 60 Hz	P2		Q (l/min - m³/h - US gpm)										
3~			0	166,7	200,0	233,3	283,3	333,3	383,3	433,3	466,7	516,7	566,7
			0	10	12	14	17	20	23	26	28	31	34
			0	44,0	52,8	61,6	74,7	87,9	101,1	114,3	123,1	136,3	149,5
	HP	kW	H (m)										
P 18HX-200/1T	2	1,5	18,8	17,1	16,7	16,0	14,8	13,0	10,7	7,7	-		
P 18HX-400/2T	4	3	38,6	34,9	33,9	32,4	30,4	27,2	23,0	17,6	13,7		
P 18HX-550/3T	5,5	4	60,3	55,4	54,1	52,0	49,0	44,5	38,4	30,1	24,3		
P 18HX-750/4T	7,5	5,5	80,3	73,7	71,9	69,1	65,1	59,1	50,9	39,9	32,1		
P 18HX-1000/5T	10	7,5	106,2	94,7	92,6	89,7	84,3	78,1	68,9	56,4	47,0		
P 18HX-1500/6T	15	11	128,3	116,4	113,9	110,6	104,8	97,9	86,7	72,4	61,1		
P 18HX-1500/7T	15	11	149,5	135,2	132,3	128,4	121,5	113,2	100,0	83,3	70,2		
P 18HX-1500/8T	15	11	170,6	153,9	150,4	145,8	137,8	128,2	113,0	93,9	78,9		
P 18HX-2000/9T	20	15	190,8	172,6	168,9	164,0	155,3	144,8	127,9	106,4	89,5		
P 18HX-2000/10T	20	15	211,7	191,3	187,1	181,6	171,8	160,0	141,2	117,3	98,5		
P 18HX-2000/11T	20	15	232,6	209,8	205,1	199,0	188,2	175,2	154,4	128,1	107,5		
P 18HX-2500/12T	25	18,5	255,3	231,7	226,8	220,4	208,8	194,9	172,5	143,9	121,3		
P 22HX-300/1T	3	2,2	20,7		18,6	18,4	17,5	16,5	14,9	12,8	11,0	11,3	
P 22HX-550/2T	5,5	4	43,5		39,8	39,1	37,8	36,2	33,6	30,3	27,5	22,3	16,2
P 22HX-750/3T	7,5	5,5	65,7		60,1	58,8	56,9	54,5	50,7	45,9	41,4	33,6	24,6
P 22HX-1000/4T	10	7,5	91,2		82,6	81,0	78,1	74,6	70,9	64,2	58,5	49,3	37,9
P 22HX-1500/5T	15	11	114,7		104,2	102,2	98,6	94,2	89,7	81,4	74,3	62,8	48,6
P 22HX-1500/6T	15	11	137,6		126,5	123,9	120,1	115,7	110,4	100,4	91,8	77,5	60,7
P 22HX-2000/7T	20	15	159,5		147,1	144,1	139,9	135,0	129,0	117,5	107,5	90,9	71,4
P 22HX-2000/8T	20	15	182,0		167,5	164,1	159,1	153,5	146,5	133,3	121,9	102,8	80,5
P 22HX-2500/9T	25	18,5	206,0		190,5	186,8	181,4	175,1	167,6	153,1	140,3	119,0	93,9
P 22HX-2500/10T	25	18,5	228,6		211,2	207,0	201,0	193,9	185,4	169,2	154,9	131,2	103,3

PLUS 18 HX

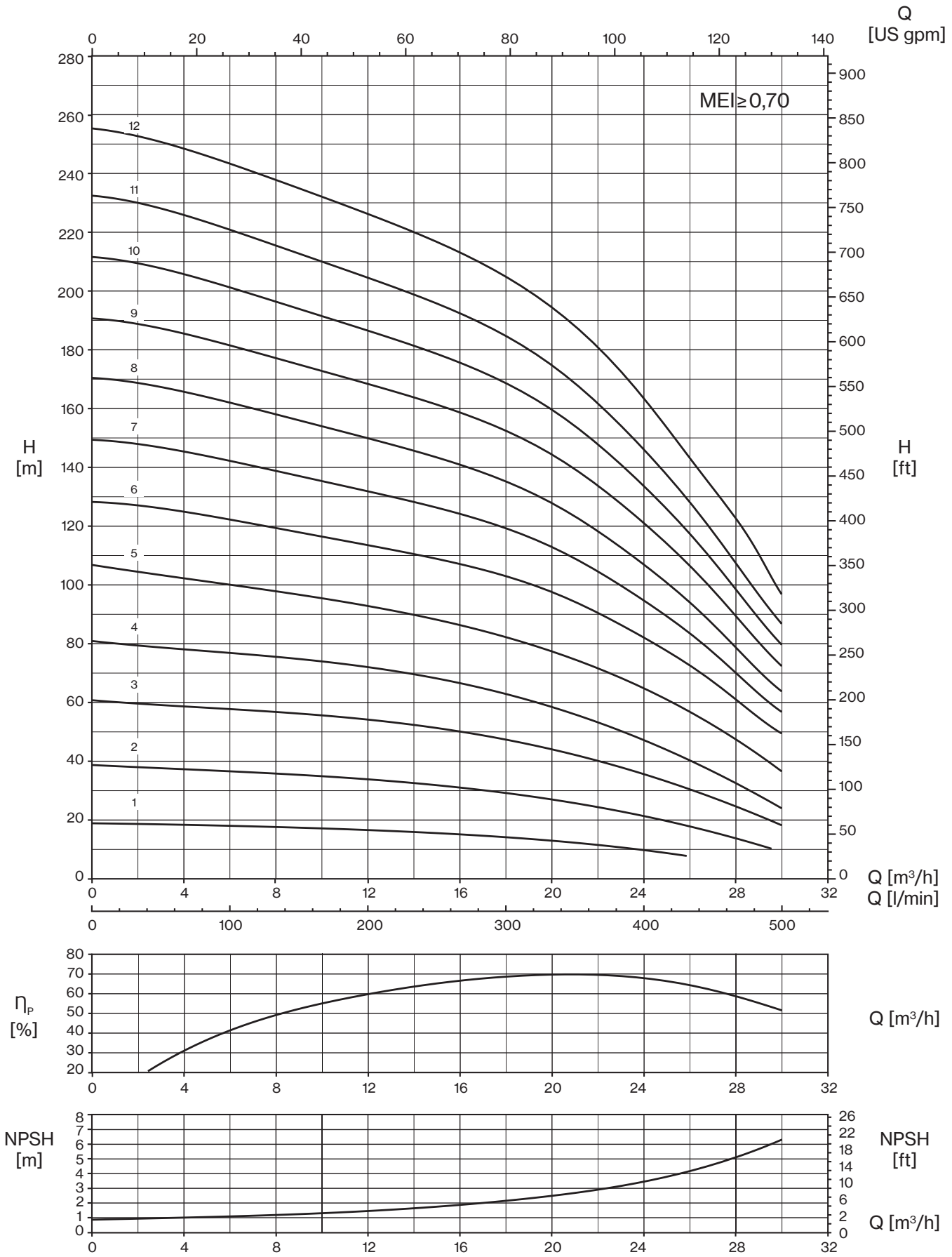

The hydraulic characteristics are guaranteed, according to ISO Standard 9906:2012, grade 3B

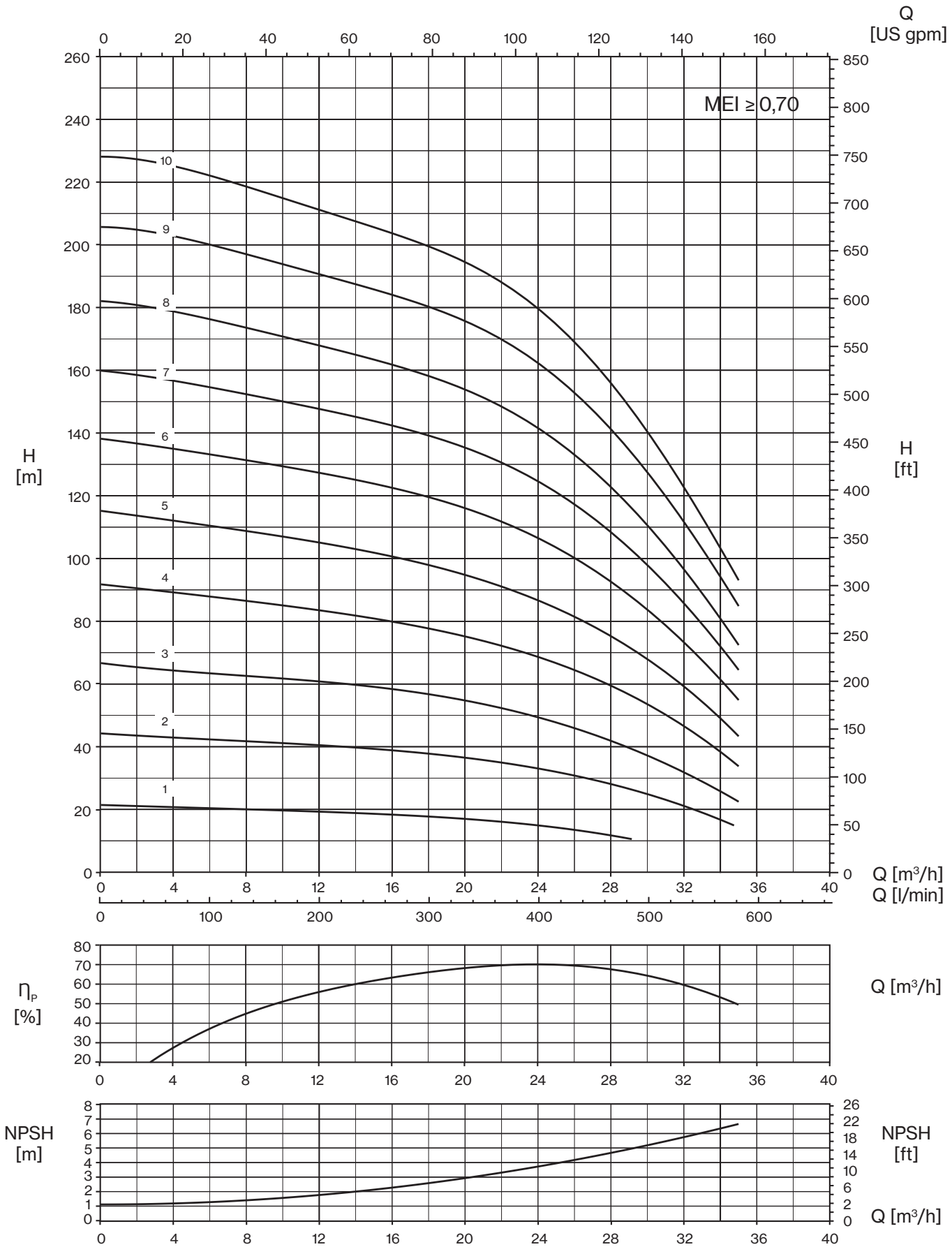
Q
[US gpm]
MEI ≥ 0,70
H
[m]
H
[ft]
Q [m³/h]
Q [l/min]
ηP
[%]
Q [m³/h]
NPSH
[m]
NPSH
[ft]
Q [m³/h]

PLUS 18 HX

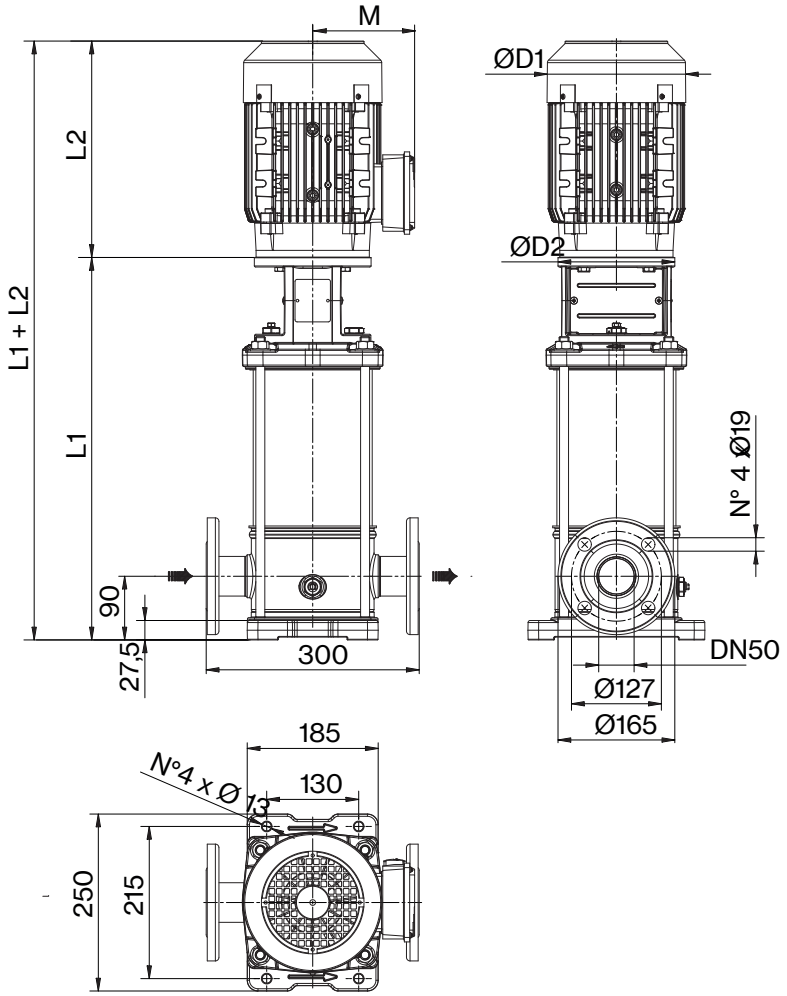

Round flanges on body type PN25/40: the pump is supplied without counterflanges (optional accessories, including bolts and joints)

TYPE	MOTOR		DIMENSIONS (mm)						Kg		
	kW	Dim	L1	L2	M	D1	D2	L1+L2	Pump	Motor	Electric Pump
P 18HX-200/1T	1,5	90	396	280	145	177	170	676	18,5	23	42
P 18HX-400/2T	3	100	396	333	157	205	170	729	20	35	55
P 18HX-550/3T	4	112	444	350	177	220	170	794	21,5	43	65
P 18HX-750/4T	5,5	132	704	400	197	256	300	1104	42,5	66	109
P 18HX-1000/5T	7,5	132	752	400	197	256	300	1152	44	73	117
P 18HX-1500/6T	11	160	820	503	255	315	350	1323	48,5	120	169
P 18HX-1500/7T	11	160	868	503	255	315	350	1371	50	120	170
P 18HX-1500/8T	11	160	916	503	255	315	350	1419	51,5	120	172
P 18HX-2000/9T	15	160	964	503	255	315	350	1467	53	132	185
P 18HX-2000/10T	15	160	1012	503	255	315	350	1515	54,5	132	187
P 18HX-2000/11T	15	160	1060	503	255	315	350	1563	55,5	132	188
P 18HX-2500/12T	18,5	160	1108	598	252	315	350	1706	57	150	207

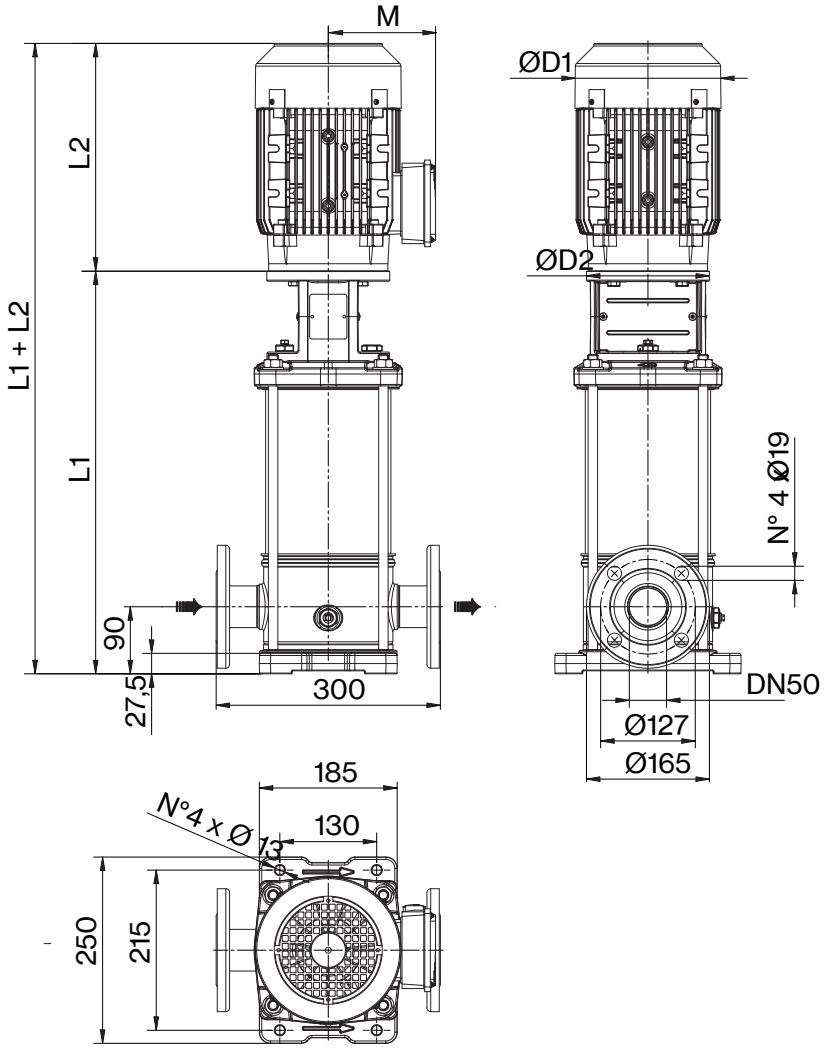

Round flanges on body type PN25/40: the pump is supplied without counterflanges (optional accessories, including bolts and joints)

TYPE	MOTOR		DIMENSIONS (mm)						Kg		
	kW	Dim	L1	L2	M	D1	D2	L1+L2	Pump	Motor	Electric Pump
P 22HX-300/1T	2,2	90	396	308	145	177	170	704	18,5	26	45
P 22HX-550/2T	4	112	396	350	177	220	170	746	20	43	63
P 22HX-750/3T	5,5	132	656	400	197	256	300	1056	41	66	107
P 22HX-1000/4T	7,5	132	704	400	197	256	300	1104	42,5	73	116
P 22HX-1500/5T	11	160	772	503	255	315	350	1275	47	120	167
P 22HX-1500/6T	11	160	820	503	255	315	350	1323	48,5	120	169
P 22HX-2000/7T	15	160	868	503	255	315	350	1371	50	132	182
P 22HX-2000/8T	15	160	916	503	255	315	350	1419	51,5	132	184
P 22HX-2500/9T	18,5	160	964	598	252	315	350	1562	53	150	203
P 22HX-2500/10T	18,5	160	1012	598	252	315	350	1610	54,5	150	205

PLUS HS/HX

Multistage Vertical

PLUS HS

PLUS HX

Stainless steel multistage vertical pumps. Suitable for clean non-loaded fluids, pressurizing system, irrigation, drinking and glycol water, water treatment, food industry, heating and air conditioning, washing system.

Construction features	
Pump body	cast iron (HS) EN 1.4401 / AISI 316 (HX)
Motor bracket	cast iron
Seal plate housing	EN 1.4301 / AISI 304 (HS) EN 1.4401 / AISI 316 (HX)
Impellers, diffusers, shell	EN 1.4301 / AISI 304 (HS) EN 1.4401 / AISI 316 (HX)
Pump shaft	EN 1.4057 / AISI 431 (HS) EN 1.4460 / AISI 329 (HX)
Mechanical seal	silicon carbide-graphite-EPDM
Intermediate bush	tungsten carbide
Ambient temperature	max 40° C
Liquid temperature	-15 ÷ +120 °C (max 85° for domestic use)
Max operating pressure	32 bar (P 35-50) 25 bar (P 75-90)
Pump body gasket	EPDM

Motor	
2 poles induction motor	3~ 220/380V - 60Hz P 4kW, size B14 V1 3~ 380/660V - 60Hz P > 4kW, size B5 V1 IE3 efficiency class
Insulation class	F
Protection degree	IP55

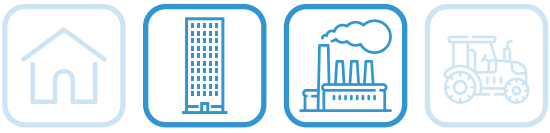

P 35 H S - 750 / 2 T -2

- mech. seal and O-rings
  - SiC-Graphite-EPDM
  - **V** SiC-Graphite-FKM
  - **2E** SiC-SiC-EPDM
  - **2V** SiC-SiC-FKM
- motor **T** 3~
- No. of impellers
- nominal power HP×100
- **S** AISI 304 impellers and diffusers, cast iron pump body
- **X** AISI 316 impellers, diffusers and pump body
- vertical axis, in-line ports, coupling
- nominal flow-rate m³/h
- pump type

More details of the mechanical seals are included on page 251

TYPE - 60 Hz	P2		Q (l/min - m³/h - US gpm)										
3~			0	466,7	533,3	600,0	666,7	733,3	800,0	900,0	1000,0	1100,0	1233,3
			0	28	32	36	40	44	48	54	60	66	74
			0	123,1	140,7	158,3	175,9	193,5	211,0	237,4	263,8	290,2	325,4
	HP	kW	H (m)										
P 35...-400/1-1RT	4	3	25,6	20,2	18,9	17,2	15,0	12,8	10,2				
P 35...-550/1T	5,5	4	35,6	28,1	26,6	25,0	23,4	21,2	18,6				
P 35...-750/2-2RT	7,5	5,5	52,6	43,9	41,5	38,4	34,6	30,6	26,1				
P 35...-1000/2-1RT	10	7,5	62,0	51,4	48,8	45,8	42,6	38,7	34,0				
P 35...-1500/2T	15	11	72,2	59,5	57,1	54,5	51,7	48,1	43,6				
P 35...-1500/3-2RT	15	11	88,7	74,9	71,1	66,7	61,9	56,3	49,6				
P 35...-1500/3-1RT	15	11	98,3	81,8	78,3	74,2	69,8	64,3	57,8				
P 35...-2000/3T	20	15	107,4	89,3	86,2	82,5	78,5	73,4	67,0				
P 35...-2000/4-2RT	20	15	123,7	104,7	100,2	94,7	88,8	81,6	73,1				
P 35...-2000/4-1RT	20	15	133,2	111,7	107,4	102,3	96,7	89,8	81,3				
P 35...-2500/4T	25	18,5	144,0	120,9	116,9	112,3	107,0	100,6	92,2				
P 35...-2500/5-2RT	25	18,5	160,4	136,5	131,1	124,6	117,5	109,0	98,5				
P 35...-2500/5-1RT	25	18,5	170,0	143,5	138,4	132,3	125,4	117,2	106,8				
P 35...-3000/5T	30	22	179,4	150,6	145,8	140,0	133,6	125,6	115,3				
P 35...-3000/6-2RT	30	22	195,7	166,0	159,8	152,2	143,9	133,9	121,5				
P 35...-3000/6-1RT	30	22	205,2	173,0	167,1	159,8	151,8	142,1	129,8				
P 35...-4000/6T	40	30	217,2	184,0	178,5	171,9	164,3	155,2	143,0				
P 35...-4000/7-2RT	40	30	233,7	200,0	193,1	184,7	175,1	164,0	149,7				
P 35...-4000/7-1RT	40	30	243,4	207,2	200,6	192,6	183,4	172,5	158,3				
P 35...-4000/7T	40	30	253,1	214,4	208,1	200,4	191,6	181,0	167,0				
P 35...-4000/8-2RT	40	30	269,6	230,3	222,6	213,1	202,3	189,8	173,5				
P 35...-5000/8-1RT	50	37	279,8	239,1	231,7	222,8	212,4	200,3	184,2				
P 35...-5000/8T	50	37	289,6	246,4	239,3	230,7	220,7	208,9	192,9				
P 50...-750/1-1RT	7,5	5,5	29,0				24,1	23,0	21,9	19,6	17,2	14,4	10,2
P 50...-1000/1T	10	7,5	36,7				30,3	29,7	28,6	26,4	24,4	21,6	17,5
P 50...-1500/2-2RT	15	11	57,2				50,9	49,1	47,1	43,1	38,9	34,3	26,6
P 50...-1500/2-1RT	15	11	64,7				56,6	55,2	53,1	49,2	45,6	40,8	33,3
P 50...-2000/2T	20	15	71,2				62,0	60,8	59,2	55,6	51,9	47,2	40,1
P 50...-2500/3-2RT	25	18,5	92,6				83,9	81,9	79,0	73,5	68,2	61,8	50,7
P 50...-2500/3-1RT	25	18,5	99,5				89,0	87,2	84,6	79,4	74,1	67,6	57,0
P 50...-2500/3T	25	18,5	106,3				94,2	92,5	90,3	85,3	79,9	73,4	63,2
P 50...-3000/4-2RT	30	22	126,9				114,7	112,2	108,6	101,8	94,7	86,4	72,2
P 50...-4000/4-1RT	40	30	135,1				122,2	120,0	116,9	110,5	103,4	95,3	81,7
P 50...-4000/4T	40	30	142,0				127,5	125,4	122,7	116,5	109,4	101,4	88,1
P 50...-4000/5-2RT	40	30	162,9				148,6	145,8	141,7	133,6	124,9	114,9	97,8
P 50...-4000/5-1RT	40	30	169,8				153,8	151,1	147,5	139,7	130,8	120,9	104,2
P 50...-5000/5T	50	37	177,1				160,0	157,5	154,3	146,8	138,0	128,2	111,9
P 50...-5000/6-2RT	50	37	198,0				181,2	178,0	173,5	164,1	153,6	141,9	121,8
P 50...-5000/6-1RT	50	37	204,9				186,5	183,4	179,3	170,2	159,6	148,0	128,2
P 50...-5000/6T	50	37	211,8				191,8	188,8	185,0	176,2	165,6	154,0	134,6
P 50...-6000/7-2RT	60	45	233,7				214,5	210,8	205,8	195,1	183,0	169,5	146,5
P 50...-6000/7-1RT	60	45	240,7				219,8	216,2	211,6	201,3	189,0	175,6	152,9
P 50...-6000/7T	60	45	247,7				225,1	221,7	217,4	207,4	195,1	181,7	159,3

PLUS 75-90 HS/HX

TYPE - 60 Hz	P2		Q (l/min - m³/h - US gpm)											
3~			0	583,3	750,0	916,7	1083,3	1250,0	1416,7	1583,3	1750,0	1916,7	2166,7	2300,0
			0	35,0	45,0	55,0	65,0	75,0	85,0	95,0	105,0	115,0	130,0	138,0
			0	153,9	197,9	241,8	285,8	329,8	373,7	417,7	461,7	505,6	571,6	606,7
	HP	kW	H (m)											
P 75...-1000/1-1RT	10	7,5	31,2	27,2	25,7	24,2	22,5	19,5	16,1	12,0	6,9			
P 75...-1500/1T	15	11	44,2	36,7	34,2	32,6	31,1	29,2	26,7	23,3	18,6			
P 75...-2000/2-2RT	20	15	56,6	54,7	53,2	51,1	48,4	43,8	38,1	31,6	23,6			
P 75...-2500/2-1RT	25	18,5	73,3	64,7	61,5	58,9	56,3	52,5	47,3	40,4	32,0			
P 75...-3000/2T	30	22	81,3	74,0	71,3	68,9	66,5	64,0	60,2	55,0	48,0			
P 75...-3000/3-2RT	30	22	97,1	91,5	88,6	85,4	81,4	75,5	67,9	58,8	47,2			
P 75...-4000/3-1RT	40	30	110,6	102,5	99,0	95,7	92,1	87,4	80,7	72,5	61,6			
P 75...-4000/3T	40	30	122,8	111,8	107,9	104,4	100,8	97,2	91,5	83,9	73,6			
P 75...-5000/4-2RT	50	37	135,8	127,4	123,5	119,5	114,7	107,7	98,4	86,9	71,9			
P 75...-5000/4-1RT	50	37	148,0	136,9	132,4	128,2	123,6	117,8	109,4	98,6	84,1			
P 75...-6000/4T	60	45	164,6	150,4	144,8	140,2	135,6	130,8	123,3	113,3	99,7			
P 75...-6000/5-2RT	60	45	180,7	168,3	162,7	157,4	151,3	143,2	131,9	118,0	99,8			
P 75...-6000/5-1RT	60	45	193,0	177,9	171,7	166,1	160,1	153,1	142,7	129,5	111,7			
P 90...-1500/1-1RT	15	11	38,6			29,9	28,5	27,1	25,6	23,3	20,1	16,4	9,9	5,8
P 90...-2000/1T	20	15	52,3			39,5	36,1	33,8	32,3	30,7	28,5	25,5	19,8	16,2
P 90...-2500/2-2RT	25	18,5	73,0			61,5	58,8	56,1	53,5	49,7	44,3	37,7	26,9	19,6
P 90...-3000/2-1R T	30	22	86,7			71,0	66,4	62,8	60,1	56,9	52,5	46,7	36,5	29,7
P 90...-4000/2T	40	30	103,0			84,3	79,0	74,6	70,9	67,4	63,7	58,9	49,6	43,5
P 90...-5000/3-2RT	50	37	122,8			104,5	98,6	93,7	89,9	85,3	79,0	70,3	56,1	46,1
P 90...-5000/3-1RT	50	37	137,8			116,4	109,9	104,2	99,3	94,4	88,6	80,9	67,3	58,0
P 90...-6000/3T	60	45	153,7			129,1	122,1	115,5	109,6	104,4	99,1	92,4	79,6	71,0
P 90...-6000/4-2RT	60	45	173,1			149,0	141,2	134,2	128,3	121,8	113,9	103,4	85,6	73,1

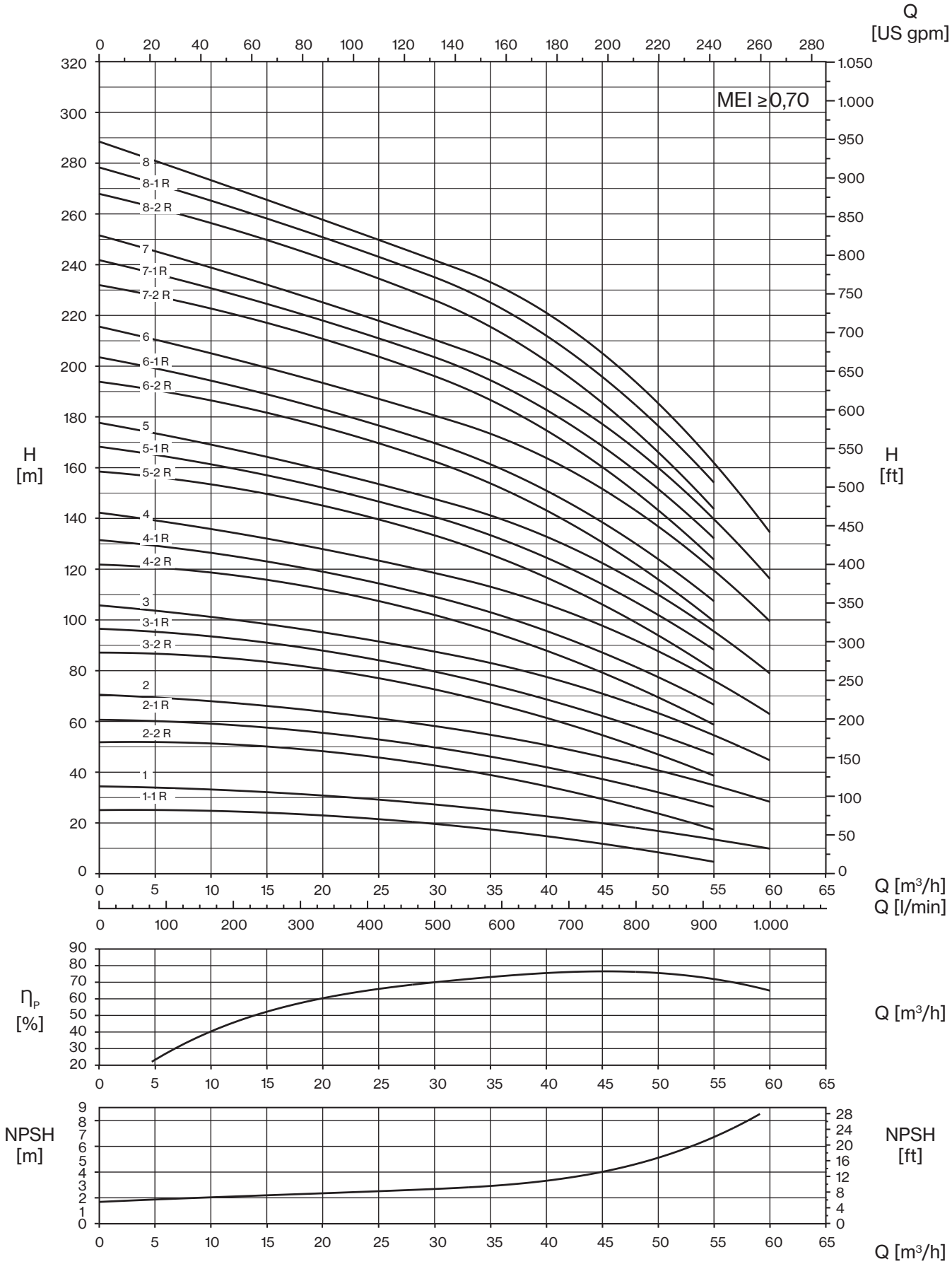
Q
[US gpm]
MEI ≥ 0,70
H
[m]
H
[ft]
8
8-1 R
8-2 R
7
7-1 R
7-2 R
6
6-1 R
6-2 R
5
5-1 R
5-2 R
4
4-1 R
4-2 R
3
3-1 R
3-2 R
2
2-1 R
2-2 R
1
1-1 R
Q [m³/h]
Q [l/min]
ηP
[%]
Q [m³/h]
NPSH
[m]
NPSH
[ft]
Q [m³/h]

PLUS 50 HS/HX

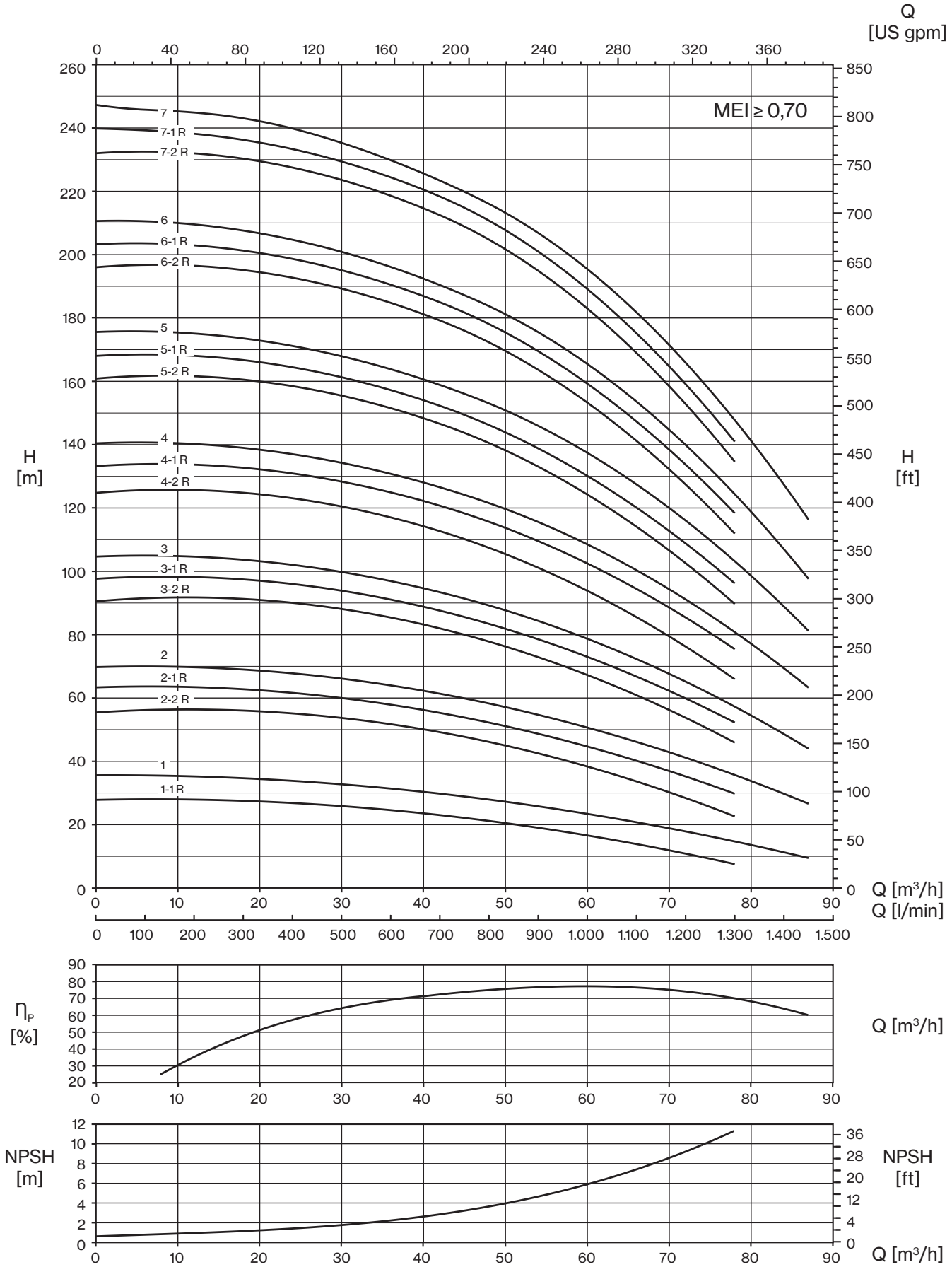

The hydraulic characteristics are guaranteed, according to ISO Standard 9906:2012, grade 3B

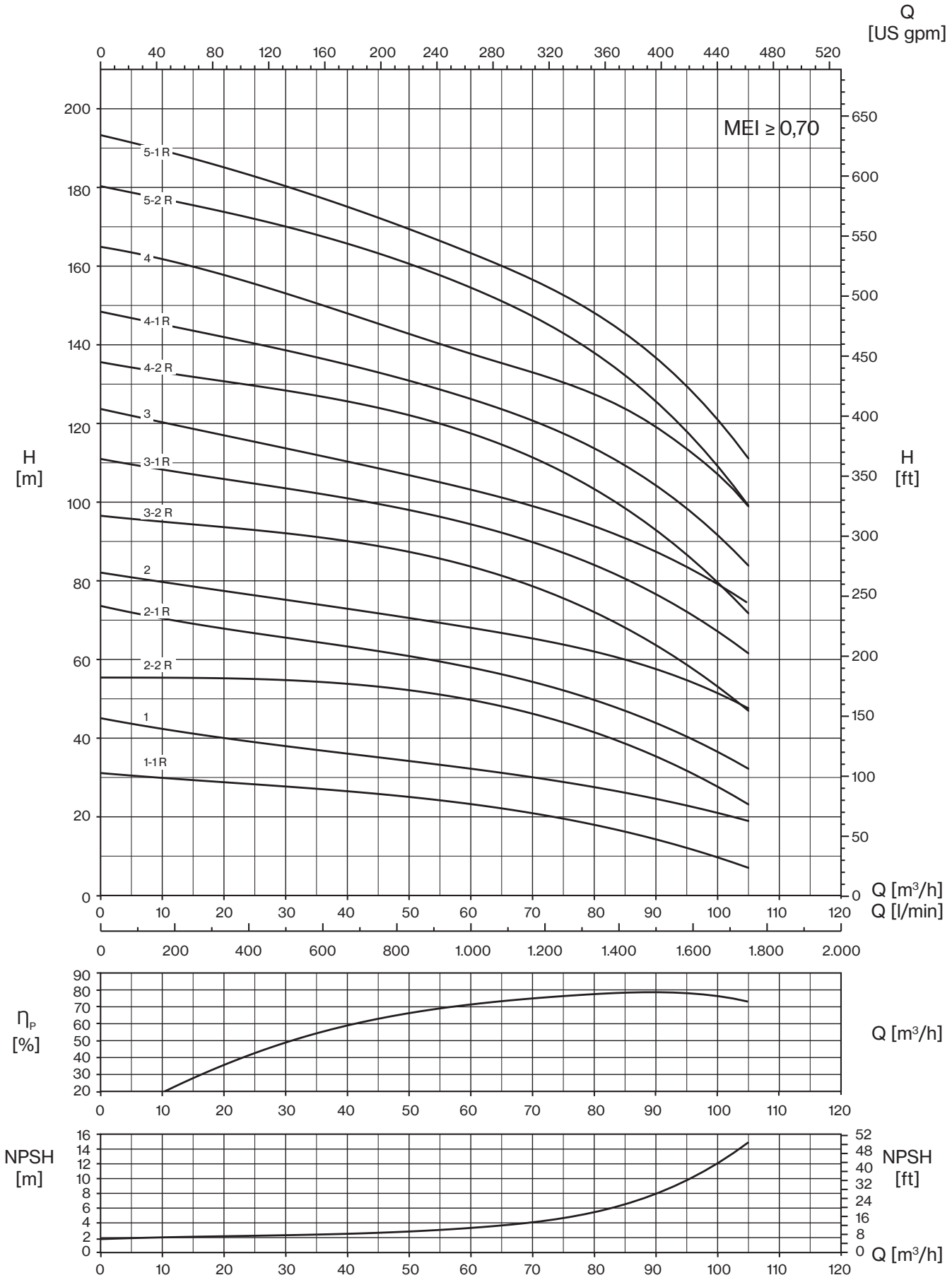
Q
[US gpm]
MEI ≥ 0,70
5-1 R
5-2 R
4
4-1 R
4-2 R
3
3-1 R
3-2 R
2
2-1 R
2-2 R
1
1-1 R
H
[m]
H
[ft]
Q [m³/h]
Q [l/min]
ηP
[%]
Q [m³/h]
NPSH
[m]
NPSH
[ft]
Q [m³/h]

PLUS 90 HS/HX

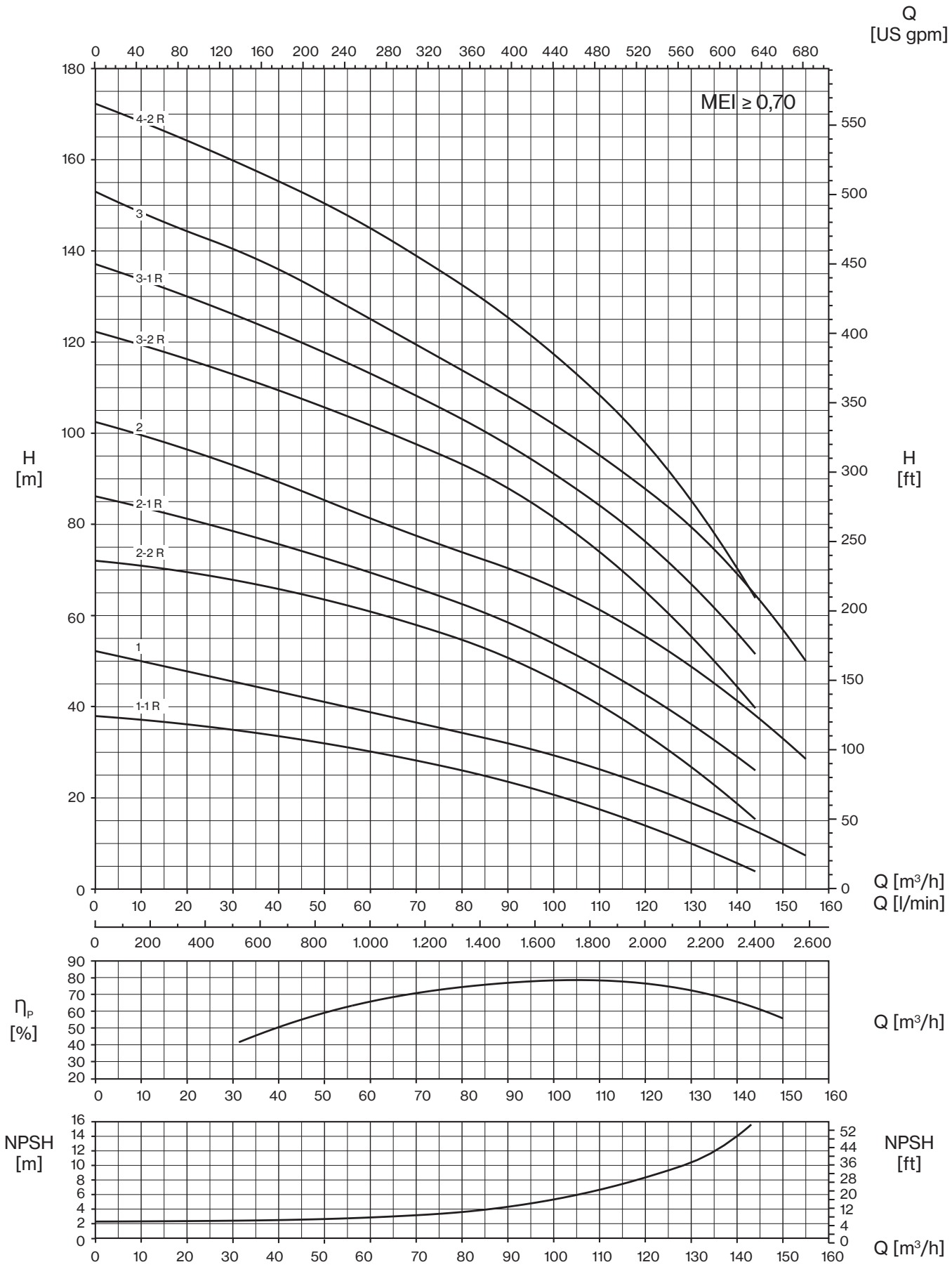

The hydraulic characteristics are guaranteed, according to ISO Standard 9906:2012, grade 3B

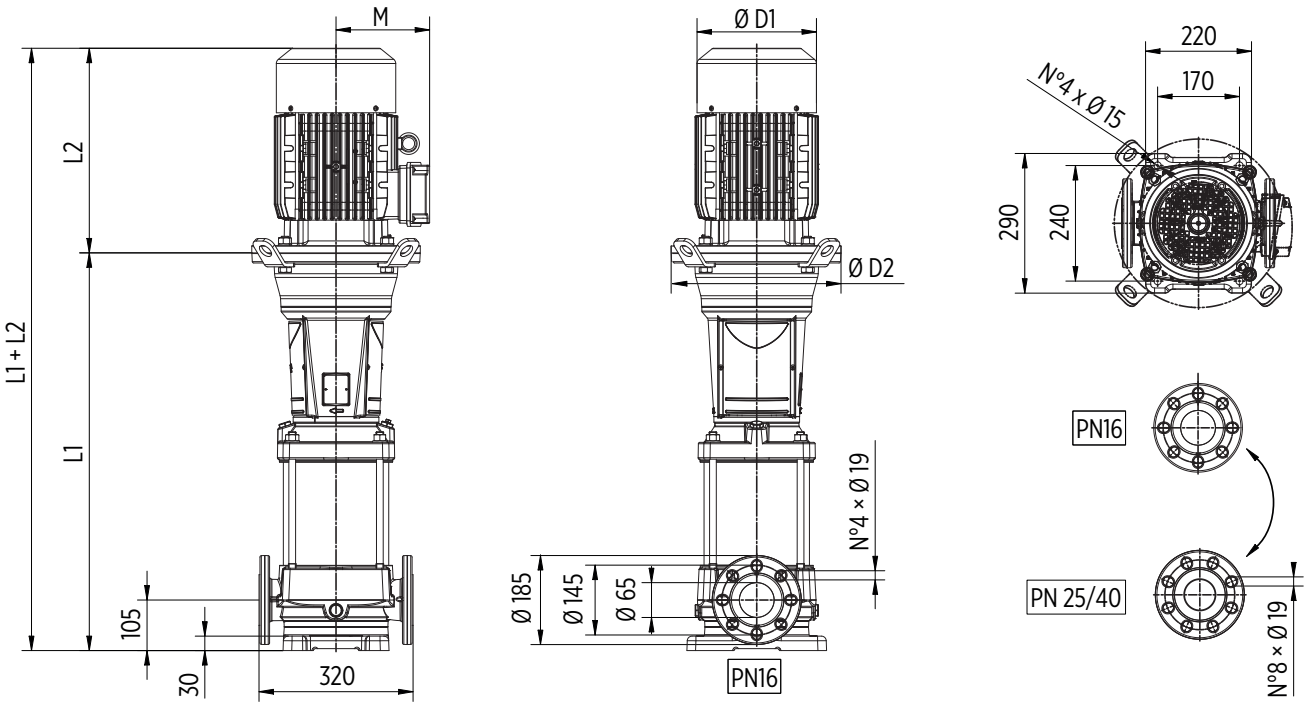

Round flanges on body type PN25/40: the pump is supplied without counterflanges (optional accessories, including bolts and joints)

TYPE	MOTOR		DIMENSIONS (mm)						Kg		
	kW	Dim	L1	L2	M	D1	D2	L1+L2	Pump	Motor	Electric Pump
P 35...-400/1-1RT	3	100	431	333	157	205	170	764	48	35	83
P 35...-550/1T	4	112	431	350	177	220	170	781	48	43	91
P 35...-750/2-2RT	5,5	132	724	400	197	256	300	1124	72,5	66	138,5
P 35...-1000/2-1RT	7,5	132	724	400	197	256	300	1124	72,5	73	145,5
P 35...-1500/2T	11	160	744	503	255	315	350	1247	76	120	196
P 35...-1500/3-2RT	11	160	826	503	255	315	350	1329	80	120	200
P 35...-1500/3-1RT	11	160	826	503	255	315	350	1329	80	120	200
P 35...-2000/3T	15	160	826	503	255	315	350	1329	80	132	212
P 35...-2000/4-2RT	15	160	908	503	255	315	350	1411	84	132	216
P 35...-2000/4-1RT	15	160	908	503	255	315	350	1411	84	132	216
P 35...-2500/4T	18,5	160	908	598	252	315	350	1506	84	150	234
P 35...-2500/5-2RT	18,5	160	991	598	252	315	350	1589	88	150	238
P 35...-2500/5-1RT	18,5	160	991	598	252	315	350	1589	88	150	238
P 35...-3000/5T	22	180	991	620	270	360	350	1611	87,5	205	292,5
P 35...-3000/6-2RT	22	180	1073	620	270	360	350	1693	91,5	205	296,5
P 35...-3000/6-1RT	22	180	1073	620	270	360	350	1693	91,5	205	296,5
P 35...-4000/6T	30	200	1078	661	303	400	400	1739	95	250	345
P 35...-4000/7-2RT	30	200	1160	661	303	400	400	1821	99	250	349
P 35...-4000/7-1RT	30	200	1160	661	303	400	400	1821	99	250	349
P 35...-4000/7 R	30	200	1160	661	303	400	400	1821	99	250	349
P 35...-4000/8-2RT	30	200	1242	661	303	400	400	1903	103	250	353
P 35...-5000/8-1RT	37	200	1242	661	303	400	400	1903	103	270	373
P 35...-5000/8T	37	200	1242	661	303	400	400	1903	103	270	373

PLUS 50 HS/HX

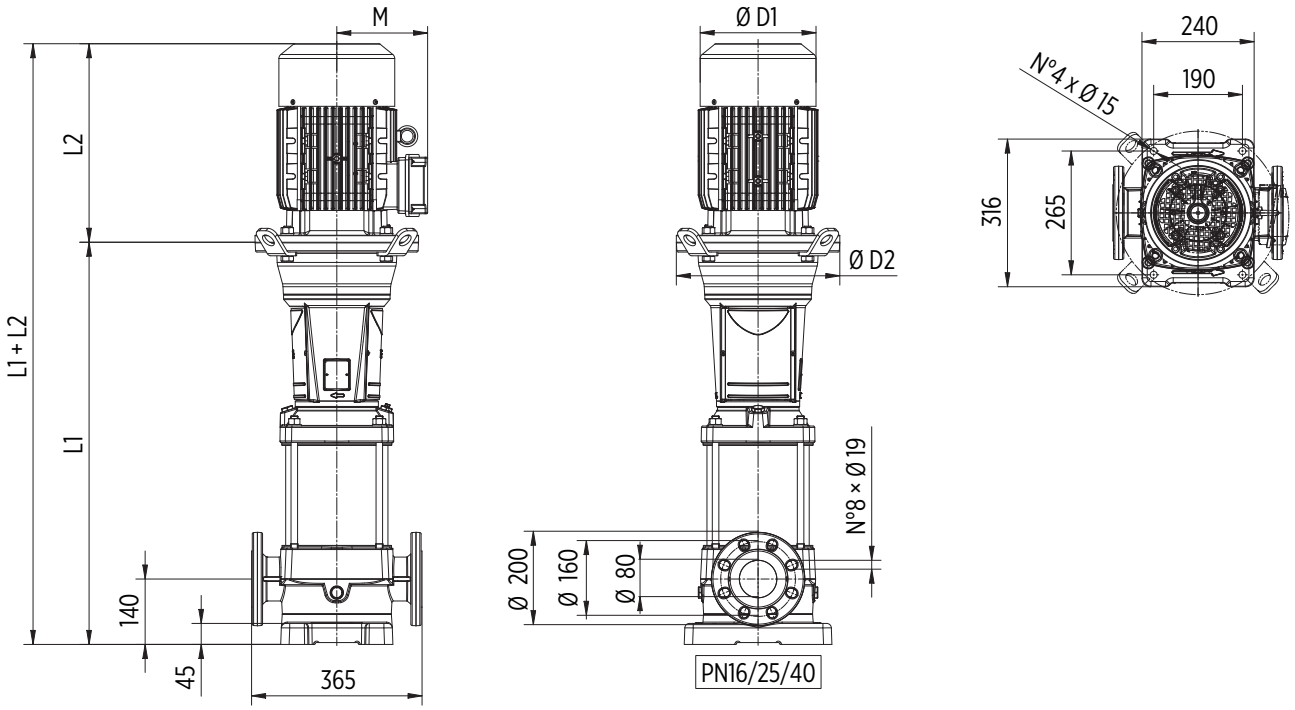

Round flanges on body type PN25/40: the pump is supplied without counterflanges (optional accessories, including bolts and joints)

TYPE	MOTOR		DIMENSIONS (mm)						Kg		
	kW	Dim	L1	L2	M	D1	D2	L1+L2	Pump	Motor	Electric Pump
P 50...-750/1-1RT	5,5	132	677	400	197	256	300	1077	74,5	66	140,5
P 50...-1000/1T	7,5	132	677	400	197	256	300	1077	74,5	73	147,5
P 50...-1500/2-2RT	11	160	779	503	255	315	350	1282	81,5	120	201,5
P 50...-1500/2-1RT	11	160	779	503	255	315	350	1282	81,5	120	201,5
P 50...-2000/2T	15	160	779	503	255	315	350	1282	81,5	132	213,5
P 50...-2500/3-2RT	18,5	160	861	598	252	315	350	1459	85,5	150	235,5
P 50...-2500/3-1RT	18,5	160	861	598	252	315	350	1459	85,5	150	235,5
P 50...-2500/3T	18,5	160	861	598	252	315	350	1459	85,5	150	235,5
P 50...-3000/4-2RT	22	180	943	620	270	360	350	1563	89,5	205	294,5
P 50...-4000/4-1RT	30	200	948	661	303	400	400	1609	92,5	250	342,5
P 50...-4000/4T	30	200	948	661	303	400	400	1609	92,5	250	342,5
P 50...-4000/5-2RT	30	200	1031	661	303	400	400	1692	96,5	250	346,5
P 50...-4000/5-1RT	30	200	1031	661	303	400	400	1692	96,5	250	346,5
P 50...-5000/5 T	37	200	1031	661	303	400	400	1692	96,5	270	366,5
P 50...-5000/6-2R T	37	200	1113	661	303	400	400	1774	100,5	270	370,5
P 50...-5000/6-1R T	37	200	1113	661	303	400	400	1774	100,5	270	370,5
P 50...-5000/6T	37	200	1113	661	303	400	400	1774	100,5	270	370,5
P 50...-6000/7-2RT	45	225	1195	710	312	450	450	1905	106,5	315	421,5
P 50...-6000/7-1RT	45	225	1195	710	312	450	450	1905	106,5	315	421,5
P 50...-6000/7T	45	225	1195	710	312	450	450	1905	106,5	315	421,5

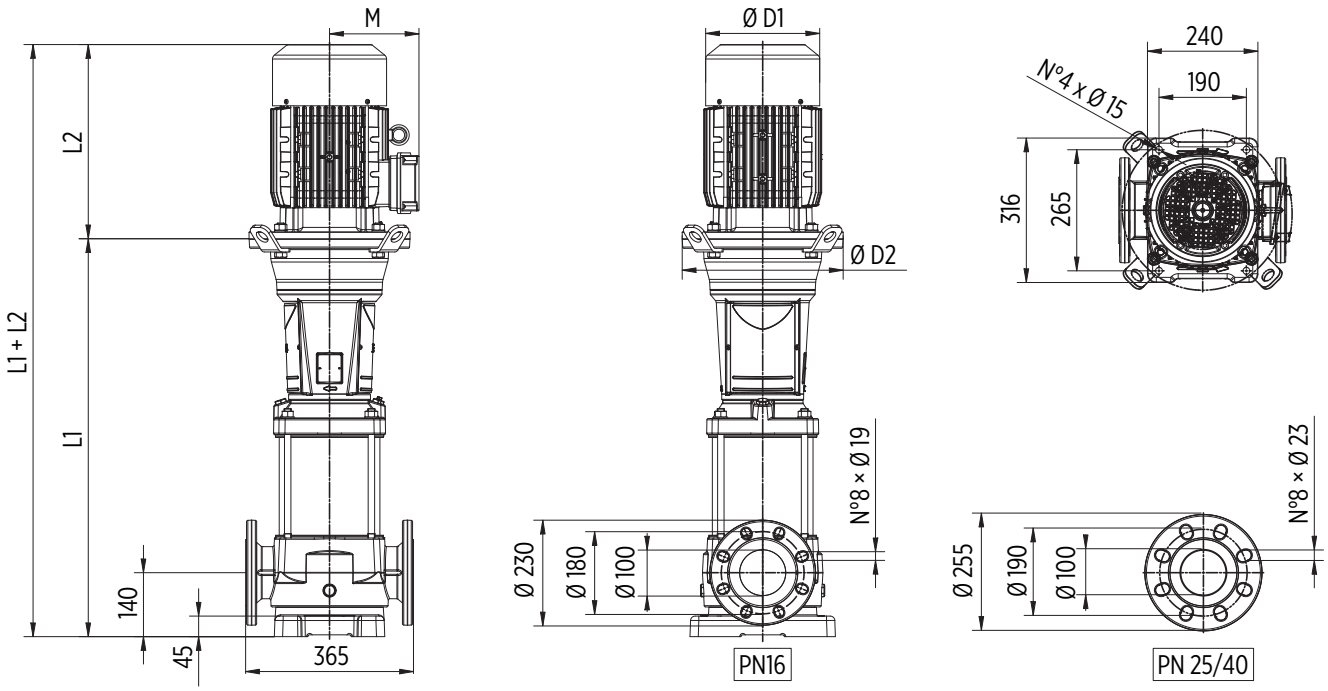

Round flanges on body type PN25/40: the pump is supplied without counterflanges (optional accessories, including bolts and joints)

TYPE	MOTOR		DIMENSIONS (mm)						Kg		
	kW	Dim	L1	L2	M	D1	D2	L1+L2	Pump	Motor	Electric Pump
P 75...-1000/1-1RT	7,5	132	737	400	197	256	300	1137	80,5	73	153,5
P 75...-1500/1T	11	160	757	503	255	315	350	1260	84	120	204
P 75...-2000/2-2RT	15	160	849	503	255	315	350	1352	88,5	132	220,5
P 75...-2500/2-1RT	18,5	160	849	598	252	315	350	1447	88,5	150	238,5
P 75...-3000/2T	22	180	849	620	270	360	350	1469	88	205	293
P 75...-3000/3-2RT	22	180	941	620	270	360	350	1561	92,5	205	297,5
P 75...-4000/3-1RT	30	200	946	661	303	400	400	1607	96	250	346
P 75...-4000/3T	30	200	946	661	303	400	400	1607	96	250	346
P 75...-5000/4-2RT	37	200	1038	661	303	400	400	1699	100,5	270	370,5
P 75...-5000/4-1RT	37	200	1038	661	303	400	400	1699	100,5	270	370,5
P 75...-6000/4T	45	225	1038	710	312	450	450	1748	102,5	315	417,5
P 75...-6000/5-2RT	45	225	1131	710	312	450	450	1841	107	315	422
P 75...-6000/5-1RT	45	225	1131	710	312	450	450	1841	107	315	422

PLUS 90 HS/HX

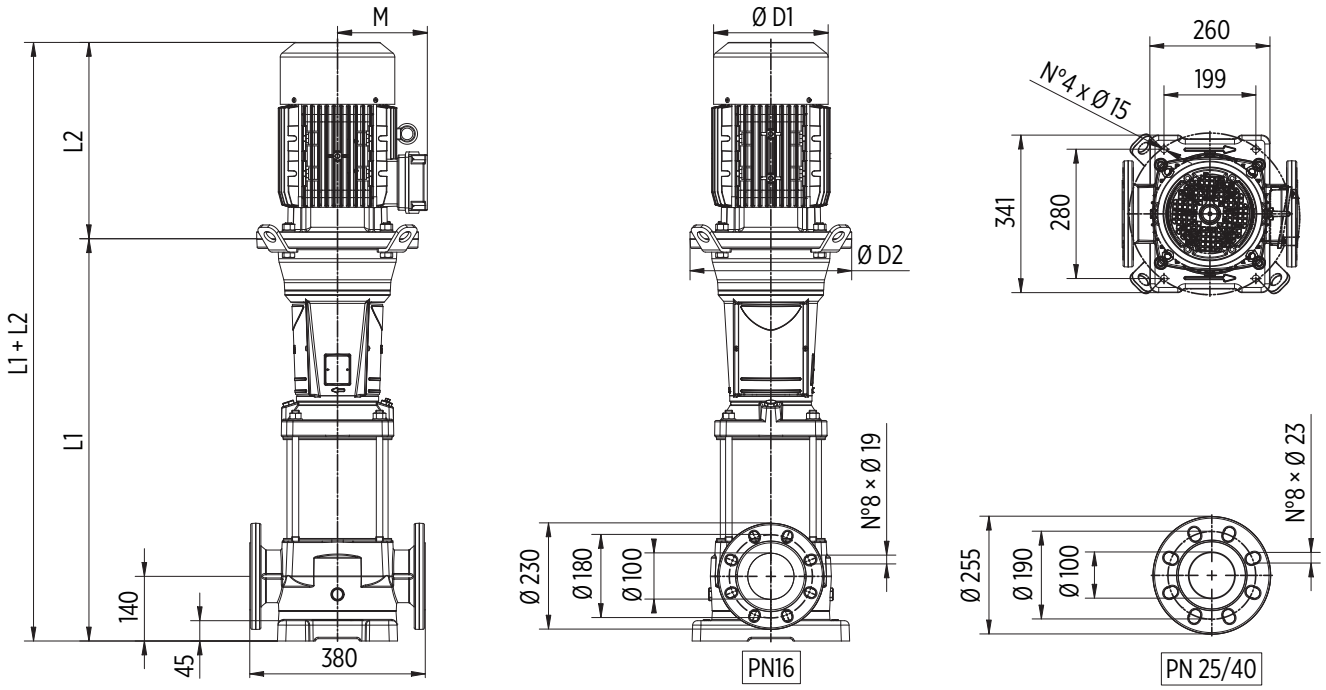

Round flanges on body type PN25/40: the pump is supplied without counterflanges (optional accessories, including bolts and joints)

TYPE	MOTOR		DIMENSIONS (mm)						Kg		
	kW	Dim	L1	L2	M	D1	D2	L1+L2	Pump	Motor	Electric Pump
P 90...-1500/1-1RT	11	160	757	503	255	315	350	1260	85,5	120	205,5
P 90...-2000/1T	15	160	757	503	255	315	350	1260	85,5	132	217,5
P 90...-2500/2-2RT	18,5	160	849	598	252	315	350	1447	89	150	239
P 90...-3000/2-1RT	22	180	849	620	270	360	350	1469	89	205	294
P 90...-4000/2T	30	200	854	661	303	400	400	1515	92	250	342
P 90...-5000/3-2RT	37	200	946	661	303	400	400	1607	95,5	270	365,5
P 90...-5000/3-1RT	37	200	946	661	303	400	400	1607	95,5	270	365,5
P 90...-6000/3T	45	225	946	710	312	450	450	1656	98	315	413
P 90...-6000/4-2RT	45	225	1038	710	312	450	450	1748	101,5	315	416,5

PLUS HS-HX Serie-Mechanical seal and bearings

CARTRIDGE MECHANICAL SEAL	PUMP MODEL	SHAFT		STANDARD MATERIAL	OPTIONAL		
	P18-100/1T, P18-200/2T, P18-300/3T, P18-400/4T, P18-550/5T, P18-750/6T, P18-750/7T, P18-1000/8T, P18-1000/9T, P18-1500/10T, P18-1500/11T, P18-1500/12T, P18-1500/13T, P18-1500/14T, P18-2000/15T, P18-2000/16T, P18-2000/17T, P22-150/1T, P22-300/2T, P22-400/3T, P22-550/4T, P22-750/5T, P22-1000/6T, P22-1000/7T, P22-1500/8T, P22-1500/9T, P22-1500/10T, P22-2000/11T, P22-2000/12T, P22-2000/13T	16mm	***Rotating face*** ***Stationary face*** ***Elastomer***	SiC Graphite EPDM	SiC Graphite FKM	SiC SiC EPDM	SiC SiC FKM
	P35-300/1T, P35-550/2-2RT, P35-550/2-1RT, P35-750/2T, P35-750/3-2RT, P35-1000/3-1RT, P35-1000/3T, P35-1000/4-2RT, P35-1500/4-1RT, P35-1500/4T, P35-1500/5-2RT, P35-1500/5-1RT, P35-2000/5T, P35-2000/6-2RT, P35-2000/6-1RT, P35-2000/6T, P35-2000/7-2RT, P35-2000/7-1RT, P35-2500/7T, P35-2500/8-2RT, P35-2500/8-1RT, P35-2500/8T, P35-3000/9-2RT, P35-3000/9-1RT, P35-3000/9T, P35-3000/10-2RT, P35-3000/10-1RT, P35-4000/10T, P35-4000/11-2RT, P35-4000/11-1RT, P35-4000/11T, P35-4000/12-2RT, P35-4000/12-1RT, P35-4000/12T, P35-4000/13-2RT, P35-4000/13-1RT, P35-4000/13T, P50-400/1-1RT, P50-550/1T, P50-750/2-2RT, P50-1000/2T, P50-1500/3-2RT, P50-1500/3T, P50-2000/4-2RT, P50-2000/4T, P50-2500/5-2RT, P50-2500/5T, P50-3000/6-2RT, P50-3000/6T, P50-4000/7-2RT, P50-4000/7T, P50-4000/8-2RT, P50-4000/8T, P50-5000/9-2RT, P50-5000/9T, P50-5000/10-2RT, P50-5000/10T, P50-6000/11-2RT, P50-6000/11T, P50-6000/12-2RT, P50-6000/12T, P50-6000/13-2RT, P75-550/1-1RT, P75-750/1T, P75-1000/2-2RT, P75-1500/2-1RT, P75-1500/2T, P75-2000/3-2RT, P75-2000/3-1RT, P75-2500/3T, P75-2500/4-2RT, P75-3000/4-1RT, P75-3000/4T, P75-4000/5-2RT, P75-4000/5-1RT, P75-4000/5T, P75-4000/6-2RT, P75-5000/6-1RT, P75-5000/6T, P75-5000/7-2RT, P75-5000/7-1RT, P75-6000/7T, P75-6000/8-2RT, P75-6000/8-1RT, P75-6000/8T, P90-750/1-1RT, P90-1000/1T, P90-1500/2-2RT, P90-2000/2T, P90-2500/3-2RT, P90-3000/3T, P90-4000/4-2RT, P90-4000/4T, P90-5000/5-2RT, P90-5000/5T, P90-6000/6-2RT, P90-6000/6T	22mm / Balanced seal	***Rotating face*** ***Stationary face*** ***Elastomer***	SiC Graphite EPDM	SiC Graphite FKM	SiC SiC EPDM	SiC SiC FKM

BEARINGS	PUMP MODEL	PUMP THRUST BEARING		MOTOR BEARING	
	P18-100/1T, P22-150/1T	-	-	6204-ZZ C3	6204-ZZ C3
	P18-200/2T, P18-300/3T, P22-300/2T, P35-300/1T	-	-	6205-ZZ C3	6205-ZZ C3
	P18-400/4T, P18-550/5T, P22-400/3T, P22-550/4T, P35-550/2-2RT, P35-550/2-1RT, P50-400/1-1RT, P50-550/1T, P75-550/1-1RT	-	-	6206-ZZ C3	6206-ZZ C3
	P18-750/6T, P18-750/7T, P18-1000/8T, P18-1000/9T, P22-750/5T, P22-1000/6T, P22-1000/7T, P35-750/2T, P35-750/3-2RT, P35-1000/3-1RT, P35-1000/3T, P35-1000/4-2RT, P50-750/2-2RT, P50-1000/2T, P75-750/1T, P75-1000/2-2RT, P90-750/1-1RT, P90-1000/1T	6212 2Z	-	6208-ZZ C3	6208-ZZ C3
	P18-1500/10T, P18-1500/11T, P18-1500/12T, P18-1500/13T, P18-1500/14T, P18-2000/15T, P18-2000/16T, P18-2000/17T, P22-1500/8T, P22-1500/9T, P22-1500/10T, P22-2000/11T, P22-2000/12T, P22-2000/13T, P22-2000/14T, P22-2500/15T, P22-2500/16T, P22-2500/17T, P35-1500/4-1RT, P35-1500/4T, P35-1500/5-2RT, P35-1500/5-1RT, P50-1500/3-2RT, P50-1500/3T, P75-1500/2-1RT, P75-1500/2T, P90-1500/2-2RT			6309-ZZ C3	6309-ZZ C3
	P35-2000/5T, P35-2000/6-2RT, P35-2000/6-1RT, P35-2000/6T, P35-2000/7-2RT, P35-2000/7-1RT, P35-2500/7T, P35-2500/8-2RT, P35-2500/8-1RT, P35-2500/8T, P50-2000/4-2RT, P50-2000/4T, P50-2500/5-2RT, P50-2500/5T, P75-2000/3-2RT, P75-2000/3-1RT, P75-2500/3T, P75-2500/4-2RT, P90-2000/2T, P90-2500/3-2RT	6212 2Z	7212 BEP		
	P35-3000/9-2RT, P35-3000/9-1RT, P35-3000/9T, P35-3000/10-2RT, P35-3000/10-1RT, P50-3000/6-2RT, P50-3000/6T, P75-3000/4-1RT, P75-3000/4T, P90-3000/3T			6311-ZZ C3	6311-ZZ C3
	P35-4000/10T, P35-4000/11-2RT, P35-4000/11-1RT, P35-4000/11T, P35-4000/12-2RT, P35-4000/12-1RT, P35-4000/12T, P35-4000/13-2RT, P35-4000/13-1RT, P35-4000/13T, P50-4000/7-2RT, P50-4000/7T, P50-4000/8-2RT, P50-4000/8T, P50-5000/9-2RT, P50-5000/9T, P50-5000/10-2RT, P50-5000/10T, P75-4000/5-2RT, P75-4000/5-1RT, P75-4000/5T, P75-4000/6-2RT, P75-5000/6-1RT, P75-5000/6T, P75-5000/7-2RT, P75-5000/7-1RT, P90-4000/4-2RT, P90-4000/4T, P90-5000/5-2RT, P90-5000/5T	6214 2Z	7214 BEP	6312-ZZ C3	6312-ZZ C3
	P50-6000/11-2RT, P50-6000/11T, P50-6000/12-2RT, P50-6000/12T, P50-6000/13-2RT, P75-6000/7T, P75-6000/8-2RT, P75-6000/8-1RT, P75-6000/8T, P90-6000/6-2RT, P90-6000/6T			6313-ZZ C3	6313-ZZ C3

PLUS V/L/H + VSD

Vertical booster pump with variable speed drive

PLUS V

EPIC / EPIC-A IPFC

PLUS L

EPIC / EPIC-A IPFC

PLUS H

IPFC

DESCRIPTION
Vertical pump of PLUS series provided with variable speed drive EPIC, EPIC-A or IPFC. This booster pump assures a desired pressure regardless of changes on flow demand making it suitable for low or missing pressure in residential systems and industrial applications. It is required the installation of a membrane tank downstream the system.

FEATURES
- EPIC, EPIC-A or IPFC variable speed drive
- Three-phase vertical pump of PLUS series
- Pressure sensor wired to the vsd
- Cable with plug for EPIC vsd only

FUNCTIONING
If the pressure in the network drops the pump will starts and gradually speeds up to provide with the set pressure. When the water demand decreases, the pressure will rise causing the pump speed to slow down and eventually to stop the pump if demand ceases. The pump will remain on standby waiting to start at the next water demand.

SELECTION
The next table shows the vertical PLUS pump models available for the assembly with EPIC, EPIC-A or IPFC. For pumps longer than 1.4m, IPFC is not assembled onto the motor fan cover but is supplied with a wall-mounting kit.
Consult the catalog at the PLUS series for pump specifics and characteristic curves.

P5SL /A 250/5 T -209 3×220-60

- 3×220-60: power supply
- -209: VSD model (only for EPIC-A and IPFC)
- /A: VSD type
  - /E EPIC
  - /A EPIC-A
  - /I IPFC

3~ PUMP								VSD TYPE					
TYPE		VERSION						Power supply					
		V	SV	L	SL SLX	LG	SL SLGX	1~220V		3~380V		3~220V	
P 3	120/4T	■	■	■	■	-	-	EPIC	IPFC 109	EPIC-A 304	IPFC 306	EPIC-A 206	IPFC 206
	150/5T	■	■	■	■	-	-					EPIC-A 209	IPFC 209
	200/6T	■	■	■	-	-	-		IPFC 114	EPIC-A 306			
	250/7T	■	■	■	■	-	-						
	300/8T	■	■	■	■	-	-	-	-			-	IPFC 214
	350/10T	-	-	-	-	-	■			EPIC-A 309	IPFC 309		
	400/12T	-	-	-	-	-	■						
	450/14T	-	-	-	-	-	■			-	IPFC 311	-	IPFC 218
P 5	180/4T	■	■	■	■	-	-	EPIC	IPFC 109	EPIC-A 304	IPFC 306	EPIC-A 209	IPFC 209
	250/5T	■	■	■	■	-	-	-	IPFC 114	EPIC-A 306			
	300/6T	■	■	■	■	-	-					-	IPFC 214
	350/7T	■	■	■	■	-	-		-	EPIC-A 309	IPFC 309		
	400/8T	■	■	■	■	-	-						
	450/10T	-	-	-	-	-	■			-	IPFC 311	-	IPFC 218
	550/12T	-	-	-	-	-	■				IPFC 314		IPFC 225
	750/14T	-	-	-	-	-	■						
P 7	300/4T	■	■	■	■	-	-	-	IPFC 114	EPIC-A 306	IPFC 306	-	IPFC 214
	400/5T	■	■	■	■	-	-		-	EPIC-A 309	IPFC 309		
	450/6T	■	■	■	■	-	-			-		-	IPFC 218
	550/7T	■	■	■	■	-	-				IPFC 311		
	750/8T	■	■	■	■	-	-				IPFC 314		IPFC 225
	800/10T	-	-	-	-	-	■				IPFC 318		IPFC 230
	900/12T	-	-	-	-	-	■						
P 9	350/4T	■	■	■	■	-	-	-	-	EPIC-A 309	IPFC 309	-	IPFC 214
	400/5T	■	■	■	■	-	-						
	450/6T	■	■	■	■	-	-			-	IPFC 311	-	IPFC 218
	550/7T	■	■	■	■	-	-						IPFC 225
	750/8T	■	■	■	■	-	-				IPFC 314		
	800/10T	-	-	-	-	-	■				IPFC 318		IPFC 230
	900/12T	-	-	-	-	-	■				IPFC 325		-

PLUS+VSD

3~ PUMP									VSD TYPE			
TYPE		VERSION							Power supply			
		V	SV	L	SL SLX	LG	HS	HX	1~220V	3~380V		3~220V
P 18	200/1T	-	-	-	-	-	-	■	IPFC 109	-	IPFC 306	IPFC 206
	400/2T	-	-	-	-	-	-	■	IPFC 114			IPFC 211
	400/3T	■	■	■	■	-	-	-	-	EPIC-A 309	IPFC309	IPFC 214
	550/3T	-	-	-	-	-	-	■		-		
	550/4T	■	■	■	■	-	-	-			IPFC311	IPFC 225
	750/4T	-	-	-	-	-	-	■				
	750/5T	■	■	■	■	-	-	-			IPFC 314	
	1000/5T	-	-	-	-	-	-	■			IPFC318	IPFC 230
	900/6T	■	■	■	■	-	-	-				
	950/7T	-	-	-	-	■	-	-				
	1500/6T	-	-	-	-	-	-	■				-
	1500/7T	-	-	-	-	-	-	■			IPFC325	
	1500/8T	-	-	-	-	-	-	■				
	2000/9T	-	-	-	-	-	-	■				
	2000/10T	-	-	-	-	-	-	■			IPFC330	
	2000/11T	-	-	-	-	-	-	■				
P 22	300/1T	-	-	-	-	-	■	■	IPFC 114	-	IPFC 306	IPFC 209
	550/2T	-	-	-	-	-	■	■	-		IPFC 309	IPFC 214
	750/3T	-	-	-	-	-	■	■			IPFC 311	IPFC 225
	1000/4T	-	-	-	-	-	■	■			IPFC 318	IPFC 230
	1500/5T	-	-	-	-	-	■	■			IPFC 325	-
	1500/6T	-	-	-	-	-	■	■				
	2000/7T	-	-	-	-	-	■	■			IPFC 330	
	2000/8T	-	-	-	-	-	■	■				
P 35	400/1-1RT	-	-	-	-	-	■	■	-	-	IPFC 309	IPFC 211
	550/1T	-	-	-	-	-	■	■				IPFC 218
	750/2-2RT	-	-	-	-	-	■	■			IPFC 314	IPFC 225
	1000/2-1RT	-	-	-	-	-	■	■			IPFC 318	IPFC 230
	1500/2T	-	-	-	-	-	■	■				-
	1500/3-2RT	-	-	-	-	-	■	■			IPFC 325	
	1500/3-1RT	-	-	-	-	-	■	■				
	2000/3T	-	-	-	-	-	■	■				
	2000/4-2RT	-	-	-	-	-	■	■			IPFC 330	
	2000/4-1RT	-	-	-	-	-	■	■				
P 50	750/1-1RT	-	-	-	-	-	■	■	-	-	IPFC 311	IPFC 218
	1000/1T	-	-	-	-	-	■	■			IPFC 314	IPFC 225
	1500/2-2RT	-	-	-	-	-	■	■			IPFC 325	-
	1500/2-1RT	-	-	-	-	-	■	■				
	2000/2T	-	-	-	-	-	■	■			IPFC 330	
P 75	1000/1-1RT	-	-	-	-	-	■	■	-	-	IPFC 314	IPFC 225
	1500/1T	-	-	-	-	-	■	■			IPFC 325	-
	2000/2-2RT	-	-	-	-	-	■	■			IPFC 330	
P 90	1500/1-1RT	-	-	-	-	-	■	■	-	-	IPFC 325	-
	2000/1RT	-	-	-	-	-	■	■			IPFC 330	

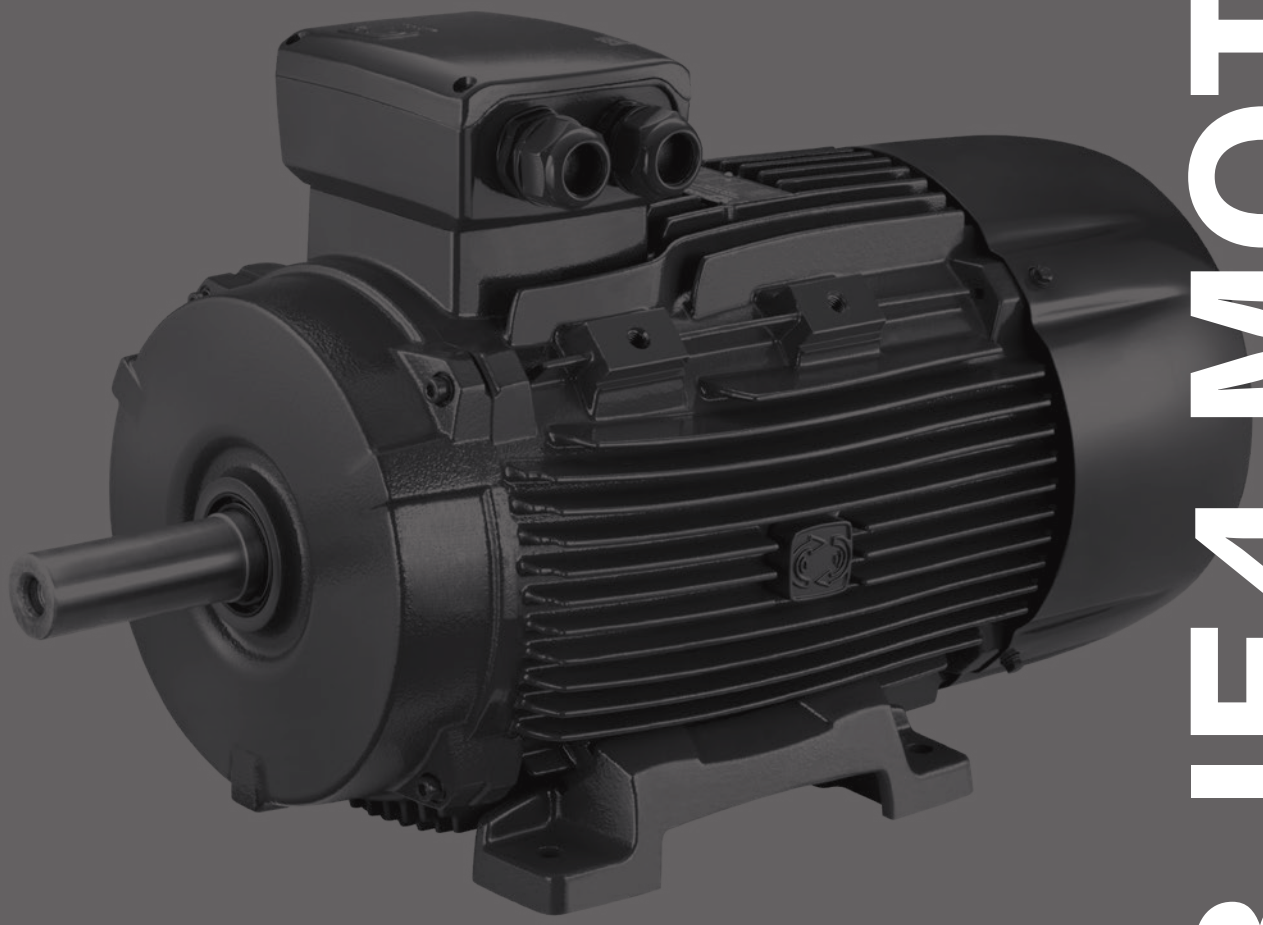

IE3-IE4 MOTORS

80-132 (0,75 kW-7,5 kW)

Construction features	
Frame	aluminum alloy
Multiple voltage/ Multi-frequency	50/60 Hz
Duty service	S1 continuous
Winding	tropicalized suitable for inverter power supply
ATEX (dust and gas)	version available: II 3G Ex nA IIB T4 Gc II 3D Ex tc IIIB T125°C Dc

Motor	
Motor	closed and externally ventilated
Insulation class	F (on request H)
Protection degree	IPX5 (on request IP56, IP66, IP67)
Efficiency class	IE3-IE4, IEC60034-30-1

160-355 (11 kW-315 kW)

Construction features	
Frame	cast iron
Multiple voltage/ Multi-frequency	50/60 Hz
Duty service	S1 continuous
Winding	tropicalized and reinforced insulation for inverter power supply (P ≥110kW we recommend to order the motor with insulated bearings option). Windings with PTC (n° 3) thermistor as standard.
ATEX (dust and gas)	version available: II 3G Ex nA IIB T4 Gc II 3D Ex tc IIIB T125°C Dc

Motor	
Motor	closed and externally ventilated
Insulation class	F (on request H)
Protection degree	IPX5 (on request IP56, IP66, IP67)
Efficiency class	IE3-IE4, IEC60034-30-1

60HZ MULTIPLIER COEFFICIENTS

All electrical data refer to motors at 50Hz. These may be connected to 60Hz, taking into account the multiplier coefficients in the table below.

V 50Hz	V 60Hz	W	In (A)	Cn (Nm)	rpm	Is (A)	CS (Nm)	C max (Nm)
230 ± 10%	**230 ± 5%**	1	1	0,83	1,2	0,83	0,83	0,83
230 ± 10%	**230 ± 10%**	1	0,95	0,83	1,2	0,83	0,83	0,83
230 ± 10%	**240 ± 5%**	1,05	1	0,87	1,2	0,87	0,87	0,87
400 ± 10%	**380 ± 5%**	1	1	0,83	1,2	0,83	0,83	0,83
400 ± 10%	**400 ± 10%**	1	0,95	0,83	1,2	0,83	0,83	0,83
400 ± 10%	**415 ± 10%**	1,05	1	0,87	1,2	0,87	0,87	0,87
400 ± 10%	**440 ± 10%**	1,10	1	0,90	1,2	0,93	0,93	0,93
400 ± 10%	**460 ± 5%**	1,15	1	0,96	1,2	0,96	0,96	0,96
400 ± 10%	**480 ± 5%**	1,20	1	1	1,2	1	1	1

VOLTAGES AND FREQUENCIES TOLERANCE

The following voltages and frequencies are inside the standard power supply of all three-phase motors, under S1 duty service.

		V	
SIZE	**Hz**	△	Y
80-112	50 ±5%	230	400
		220	380
		240	415
	60 ±5%	260	440
		220	380
		265	460
		280	480
132-355	50 ±5%	400	690
		380	660
		415	720
	60 ±5%	440	760
		380	660
		460	795
		480	830

2 POLES IE3-IE4

All electrical data refer to motors at 50Hz - 400V. For 60Hz apply the multiplier coefficient.

TYPE	kW	HP	rpm	In (A)	Is (A)	Is In	Cn (Nm)	Cs (Nm)	Cs Cn	Cmax (Nm)	Cmax Cn
80A-2	0,75	1	2892	1,74	11,84	6,8	2,48	8,60	3,5	9,18	3,7
80B-2	1,1	1,5	2885	2,26	16,74	7,4	3,64	10,90	3,0	12,74	3,5
90S-2	1,5	2	2902	3,26	25,07	7,7	4,93	19,12	3,9	18,74	3,8
90L-2	2,2	3	2918	5,02	38,59	7,7	7,35	30,97	4,2	30,44	4,1
100L-2	3	4	2903	6,09	48,24	7,9	9,87	35,19	3,6	40,74	4,1
112M-2	4	5,5	2943	7,56	74,38	9,8	12,97	45,92	3,5	61,86	4,8
132SA-2	5,5	7,5	2940	10,14	70,59	7,0	17,87	37,70	2,1	35,79	2,0
132SB-2	7,5	10	2925	13,35	95,00	7,1	24,49	53,50	2,2	78,50	3,2
160MA-2	11	15	2937	19,72	123,05	6,2	35,77	73,32	2,1	100,15	2,8
160MB-2	15	20	2938	26,29	150,23	5,7	48,76	95,08	2,0	121,89	2,5
160L-2	18,5	25	2942	32,15	192,92	6,0	60,05	124,31	2,1	179,00	2,1
180M-2	22	30	2950	37,53	304,03	8,1	71,22	163,81	2,3	220,80	3,1
200LA-2	30	40	2940	51,51	386,34	7,5	97,45	224,13	2,3	223,37	2,3
200LB-2	37	50	2960	63,26	474,46	7,5	119,38	274,56	2,3	275,49	2,3
225M-2	45	60	2960	76,69	582,87	7,6	145,19	333,93	2,3	332,80	2,3
250M-2	55	75	2970	94,39	707,92	7,5	176,85	406,76	2,3	406,76	2,3
280S-2	75	100	2970	125,82	868,14	6,9	241,16	530,56	2,2	554,67	2,3
280M-2	90	125	2970	150,67	1069,73	7,1	289,39	636,67	2,2	665,61	2,3
315S-2	110	150	2970	183,76	1304,72	7,1	353,70	707,41	2,0	778,15	2,2
315MA-2	132	180	2970	220,06	1562,41	7,1	424,44	848,89	2,0	933,78	2,2
315LA-2	160	215	2970	263,53	1871,07	7,1	514,48	1028,96	2,0	1131,85	2,2
315LB-2	200	270	2970	328,73	2333,99	7,1	643,10	1286,20	2,0	1414,81	2,2
355M-2	250	335	2980	410,91	2917,49	7,1	801,17	1602,35	2,0	1762,58	2,2
355L-2	315	423	2980	517,75	3676,03	7,1	1009,48	2018,96	2,0	2220,86	2,2

TYPE	η%				Fatt. pot. cos φ			ΔT (°C)	LwA (dB)	J Kgm2	Kg
	100%	IE	75%	50%	100%	75%	50%				
80A-2	80,9	IE3	79,6	76,4	0,770	0,700	0,566	35	65	0,00158	17
80B-2	84,5	IE3	84,7	82,8	0,830	0,770	0,652	41	65	0,00185	18
90S-2	85,3	IE3	83,4	81,3	0,786	0,726	0,582	43	71	0,00383	23
90L-2	86,2	IE3	87,0	84,9	0,730	0,675	0,498	48	71	0,00726	26
100L-2	87,1	IE3	87,3	84,9	0,812	0,766	0,618	49	75	0,01439	35
112M-2	89,6	IE3	89,8	88,9	0,856	0,805	0,665	44	77	0,01663	43
132SA-2	91,0	IE3	89,7	87,4	0,860	0,840	0,761	48	78	0,03300	66
132SB-2	91,6	IE3	92,4	92,9	0,885	0,850	0,760	60	78	0,03960	73
160MA-2	91,4	IE3	91,2	89,7	0,881	0,864	0,812	49	81	0,04976	120
160MB-2	92,0	IE3	92,6	91,8	0,895	0,877	0,841	61	81	0,06587	132
160L-2	93,0	IE3	93,7	93,0	0,893	0,875	0,827	58	81	0,07260	150
180M-2	94,0	IE3	93,9	93,0	0,900	0,880	0,870	41	83	0,09900	205
200LA-2	93,4	IE3	94,4	90,7	0,900	0,881	0,820	65	84	0,16368	250
200LB-2	93,8	IE3	93,6	90,2	0,900	0,887	0,840	65	84	0,18348	270
225M-2	94,1	IE3	93,9	90,7	0,900	0,878	0,816	65	86	0,30756	315
250M-2	94,5	IE3	92,6	88,5	0,890	0,872	0,825	65	89	0,41184	420
280S-2	95,6	IE4	93,7	89,5	0,900	0,896	0,875	55	91	0,76428	550,8
280M-2	95,8	IE4	95,7	93,7	0,900	0,894	0,857	65	91	0,89100	625
315S-2	96,0	IE4	95,9	93,9	0,900	0,894	0,857	65	92	1,55760	968
315MA-2	96,2	IE4	96,2	94,2	0,900	0,894	0,857	65	92	2,40240	1100
315LA-2	96,3	IE4	96,2	94,2	0,910	0,904	0,867	65	92	2,74560	1160,5
315LB-2	96,5	IE4	96,5	94,5	0,910	0,904	0,867	65	92	3,14160	1221
355M-2	96,5	IE4	96,5	94,5	0,910	0,904	0,867	65	100	3,96000	2090
355L-2	96,5	IE4	96,5	94,5	0,910	0,904	0,867	65	100	4,62000	2530

4 POLES IE3-IE4

All electrical data refer to motors at 50Hz - 400V. For 60Hz apply the multiplier coefficient.

TYPE	kW	HP	rpm	In (A)	Is (A)	Is In	Cn (Nm)	Cs (Nm)	Cs Cn	Cmax (Nm)	Cmax Cn
80B-4	0,75	1	1426	1,87	11,24	6,0	5,01	15,52	3,1	15,41	3,1
90S-4	1,1	1,5	1436	2,61	16,60	6,4	7,36	24,26	3,3	24,70	3,4
90L-4	1,5	2	1427	3,59	24,34	6,8	10,03	41,06	4,1	38,49	3,8
100LA-4	2,2	3	1438	4,77	33,83	7,1	14,74	52,18	3,5	54,71	3,7
100LB-4	3	4	1447	6,48	49,52	7,6	19,76	69,03	3,5	77,85	3,9
112M-4	4	5,5	1460	8,79	62,51	7,1	26,17	83,57	3,2	108,56	4,1
132S-4	5,5	7,5	1454	10,64	68,01	6,4	36,12	75,86	2,1	101,15	2,8
132M-4	7,5	10	1460	14,39	94,37	6,6	49,06	91,80	1,9	132,46	2,7
160M-4	11	15	1468	20,76	121,31	5,8	71,56	121,50	1,7	193,21	2,7
160L-4	15	20	1460	28,19	140,97	5,0	98,12	166,60	1,7	255,10	2,6
180M-4	18,5	25	1477	33,53	206,45	6,2	120,94	202,50	1,7	384,23	3,2
180L-4	22	30	1470	39,62	261,96	6,6	142,93	235,19	1,6	401,22	2,8
200L-4	30	40	1480	53,48	385,07	7,2	193,58	425,88	2,2	445,24	2,3
225S-4	37	50	1480	65,37	490,30	7,5	238,75	525,25	2,2	549,13	2,3
225M-4	45	60	1480	77,39	588,17	7,6	290,37	638,82	2,2	667,85	2,3
250M-4	55	75	1480	93,89	713,58	7,6	354,90	780,78	2,2	816,27	2,3
280S-4	75	100	1480	126,70	874,24	6,9	483,95	1064,70	2,2	1113,09	2,3
280M-4	90	120	1485	153,61	1075,26	7,0	578,79	1273,33	2,2	1331,21	2,3
315S-4	110	150	1480	187,35	1292,74	6,9	709,80	1561,55	2,2	1632,53	2,3
315M-4	132	180	1480	224,59	1549,68	6,9	851,76	1873,86	2,2	1959,04	2,3
315LA-4	160	220	1480	271,67	1874,51	6,9	1032,43	2271,35	2,2	2374,59	2,3
315LB-4	200	270	1480	339,23	2340,72	6,9	1290,54	2839,19	2,2	2968,24	2,3
355M-4	250	335	1490	414,62	2860,88	6,9	1602,35	3525,17	2,2	3685,40	2,3
355L-4	315	423	1490	522,42	3604,71	6,9	2018,96	4441,71	2,2	4643,61	2,3

TYPE	η %				Fatt. pot. cos φ			ΔT (°C)	LwA (dB)	J Kgm2	Kg
	100%	IE	75%	50%	100%	75%	50%				
80B-4	83,1	IE3	82,6	81,6	0,690	0,619	0,531	46	56	0,00277	12
90S-4	84,8	IE3	84,9	79,3	0,723	0,609	0,510	36	61	0,00304	25
90L-4	85,3	IE3	85,1	83,0	0,708	0,592	0,483	41	61	0,00356	30
100LA-4	86,7	IE3	87,8	85,8	0,771	0,663	0,543	41	64	0,00713	36
100LB-4	89,0	IE3	89,4	86,8	0,745	0,648	0,519	46	64	0,00893	40
112M-4	89,1	IE3	89,2	87,2	0,736	0,674	0,505	46	77	0,01663	43
132S-4	89,9	IE3	92,1	92,4	0,830	0,770	0,675	61	71	0,02853	47,5
132M-4	90,5	IE3	90,8	89,9	0,831	0,790	0,699	46	71	0,03946	81
160M-4	91,8	IE3	91,7	90,4	0,833	0,790	0,675	52	73	0,08133	125
160L-4	92,3	IE3	93,1	92,3	0,832	0,780	0,680	61	75	0,12239	150
180M-4	92,6	IE3	92,1	90,2	0,870	0,817	0,724	40	76	0,18531	170,6
180L-4	93,2	IE3	91,7	91,0	0,860	0,832	0,761	59	76	0,21065	189,3
200L-4	93,6	IE3	93,8	92,8	0,865	0,818	0,767	80	79	0,34930	254,8
225S-4	93,9	IE3	92,7	92,0	0,870	0,839	0,776	75	81	0,54128	268,3
225M-4	94,3	IE3	93,3	92,8	0,890	0,872	0,807	80	81	0,62527	353
250M-4	95,0	IE3	94,2	93,5	0,890	0,862	0,800	75	83	0,87991	450
280S-4	96,0	IE4	94,5	92,0	0,890	0,863	0,843	70	86	1,71600	605
280M-4	96,1	IE4	94,4	92,9	0,880	0,872	0,838	65	86	1,96680	700
315S-4	96,3	IE4	94,7	93,2	0,880	0,872	0,838	65	87	4,13160	925
315M-4	96,4	IE4	94,8	93,3	0,880	0,872	0,838	55	87	4,81800	1180
315LA-4	96,6	IE4	95,0	93,5	0,880	0,872	0,838	75	87	5,42784	1160,5
315LB-4	96,7	IE4	95,0	93,4	0,880	0,872	0,838	70	87	6,34920	1240,8
355M-4	96,7	IE4	95,1	93,5	0,900	0,892	0,857	75	94	8,61960	1870
355L-4	96,7	IE4	95,0	93,4	0,900	0,892	0,857	70	94	10,87680	2090

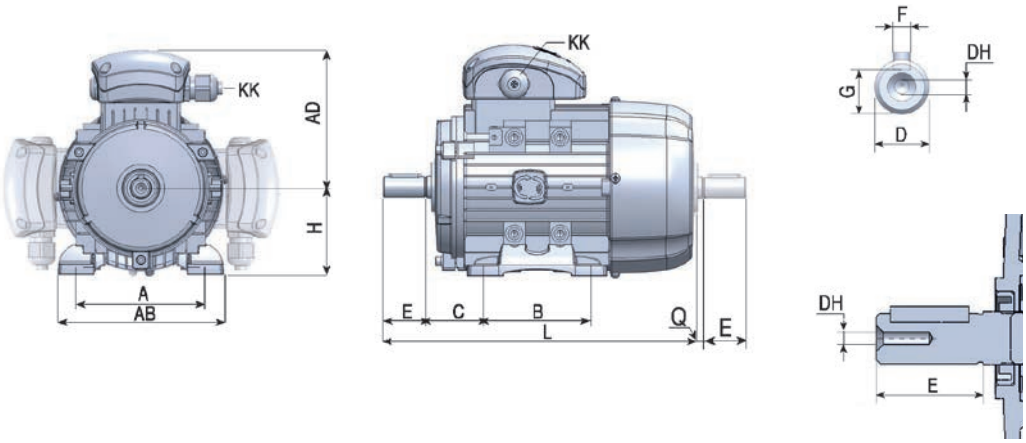

DIMENSIONS (mm)																
TYPE	POLES	AD	H	KK	L	D	DH	E	Q	F	G	B3				
												A	AB	B	C	K
80	2-8	130	80	M20	283	19	M6×16	40	3	6	15,5	125	157	100	50	10
90S	2-8	145	90	M20	330	24	M8×19	50	5	8	20	140	173	100	56	10
90L	2-8	145	90	M20	358	24	M8×19	50	5	8	20	140	173	125	56	10
100	2-8	157	100	M20	393	28	M10×22	60	5	8	24	160	196	140	63	12
112M	2-8	177	112	M25	410	28	M10×22	60	5	8	24	190	227	140	70	12
132S	2-8	197	132	M32	480	38	M12×28	80	5	10	33	216	262	140	89	12
132M	2-8	197	132	M32	516	38	M12×28	80	5	10	33	216	262	178	89	12
160M	2-8	255	160	2×M40	613	42	M16×36	110	5	12	37	254	320	210	108	15
160L	2-8	252	160	2×M40	708	42	M16×36	110	5	12	37	254	320	254	108	15
180M	2-8	270	180	2×M40	730	48	M16×36	110	8	14	42,5	279	355	241	121	15
180L	2-8	270	180	2×M40	780	48	M16×36	110	8	14	42,5	279	355	279	121	15
200L	2-8	303	200	2×M50	771	55	M20×42	110	12	16	49	318	395	305	133	19
225S	2-8	312	225	2×M50	815	60	M20×42	140	12	18	53	356	435	286	149	19
225M	2	312	225	2×M50	820	55	M20×42	110	12	16	49	356	435	286/311	149	19
225M	4-8	312	225	2×M50	850	60	M20×42	140	12	18	53	356	435	286/311	149	19
250M	2	355	250	2×M63	910	60	M20×42	140	12	18	53	406	490	349	168	24
250M	4-8	355	250	2×M63	910	65	M20×42	140	12	18	58	406	490	349	168	24
280S	2	398	280	2×M63	985	65	M20×42	140	12	18	58	457	550	368	190	24
280S	4-8	398	280	2×M63	985	75	M20×42	140	12	20	67,5	457	550	368	190	24
280M	2	398	280	2×M63	1035	65	M20×42	140	12	18	58	457	550	368/419	190	24
280M	4-8	398	280	2×M63	1035	75	M20×42	140	12	20	67,5	457	550	368/419	190	24
315S	2	540	315	2×M63	1160	65	M20×42	140	15	18	58	508	630	406	216	28
315S	4-8	540	315	2×M63	1270	80	M20×42	170	15	22	71	508	630	406	216	28
315M	2	540	315	2×M63	1290	65	M20×42	140	15	18	58	508	630	457	216	28
315M	4-8	540	315	2×M63	1325	80	M20×42	170	15	22	71	508	630	457	216	28
315L	2	540	315	2×M63	1320	65	M20×42	140	15	18	58	508	630	508	216	28
315L	4-8	540	315	2×M63	1350	80	M20×42	170	15	22	71	508	630	508	216	28
355M	2	655	355	2×M63	1500	75	M20×42	140	15	20	67,5	610	730	560/630	254	28
355M	4-8	655	355	2×M63	1530	95	M20×42	170	15	25	86	610	730	560/630	254	28
355L	2	655	355	2×M63	1500	75	M20×42	140	15	20	67,5	610	730	560/630	254	28
355L	4-8	655	355	2×M63	1530	95	M20×42	170	15	25	86	610	730	560/630	254	28

B5

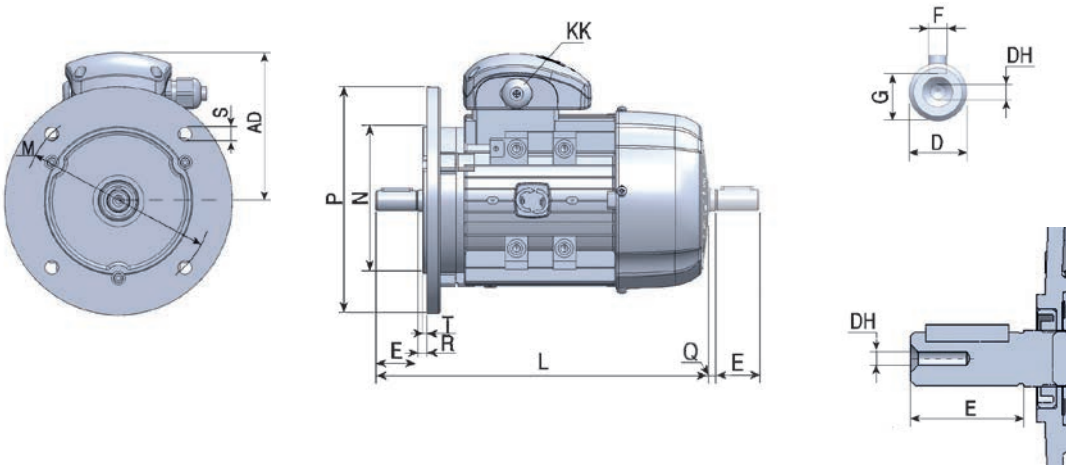

DIMENSIONS (mm)																
TYPE	POLES	AD	H	KK	L	D	DH	E	Q	F	G	B5				
												M	N	P	S	T
80	2-8	130	80	M20	283	19	M6×16	40	3	6	15,5	165	130	200	12x4	3,5
90S	2-8	145	90	M20	330	24	M8×19	50	5	8	20	165	130	200	12x4	3,5
90L	2-8	145	90	M20	358	24	M8×19	50	5	8	20	165	130	200	12x4	3,5
100	2-8	157	100	M20	393	28	M10×22	60	5	8	24	215	180	250	15x4	4
112M	2-8	177	112	M25	410	28	M10×22	60	5	8	24	215	180	250	15x4	4
132S	2-8	197	132	M32	480	38	M12×28	80	5	10	33	265	230	300	15x4	4
132M	2-8	197	132	M32	516	38	M12×28	80	5	10	33	265	230	300	15x4	4
160M	2-8	255	160	2×M40	613	42	M16×36	110	5	12	37	300	250	350	19x4	5
160L	2-8	252	160	2×M40	708	42	M16×36	110	5	12	37	300	250	350	19x4	5
180M	2-8	270	180	2×M40	730	48	M16×36	110	8	14	42,5	300	250	350	19x4	5
180L	2-8	270	180	2×M40	780	48	M16×36	110	8	14	42,5	300	250	350	19x4	5
200L	2-8	303	200	2×M50	771	55	M20×42	110	12	16	49	350	300	400	19x4	5
225S	2-8	312	225	2×M50	815	60	M20×42	140	12	18	53	400	350	450	19x8	5
225M	2	312	225	2×M50	820	55	M20×42	110	12	16	49	400	350	450	19x8	5
225M	4-8	312	225	2×M50	850	60	M20×42	140	12	18	53	400	350	450	19x8	5
250M	2	355	250	2×M63	910	60	M20×42	140	12	18	53	500	450	550	19x8	5
250M	4-8	355	250	2×M63	910	65	M20×42	140	12	18	58	500	450	550	19x8	5
280S	2	398	280	2×M63	985	65	M20×42	140	12	18	58	500	450	550	19x8	5
280S	4-8	398	280	2×M63	985	75	M20×42	140	12	20	67,5	500	450	550	19x8	5
280M	2	398	280	2×M63	1035	65	M20×42	140	12	18	58	500	450	550	19x8	5
280M	4-8	398	280	2×M63	1035	75	M20×42	140	12	20	67,5	500	450	550	19x8	5
315S	2	540	315	2×M63	1160	65	M20×42	140	15	18	58	600	550	660	24x8	6
315S	4-8	540	315	2×M63	1270	80	M20×42	170	15	22	71	600	550	660	24x8	6
315M	2	540	315	2×M63	1290	65	M20×42	140	15	18	58	600	550	660	24x8	6
315M	4-8	540	315	2×M63	1325	80	M20×42	170	15	22	71	600	550	660	24x8	6
315L	2	540	315	2×M63	1320	65	M20×42	140	15	18	58	600	550	660	24x8	6
315L	4-8	540	315	2×M63	1350	80	M20×42	170	15	22	71	600	550	660	24x8	6
355M	2	655	355	2×M63	1500	75	M20×42	140	15	20	67,5	740	680	800	24x8	6
355M	4-8	655	355	2×M63	1530	95	M20×42	170	15	25	86	740	680	800	24x8	6
355L	2	655	355	2×M63	1500	75	M20×42	140	15	20	67,5	740	680	800	24x8	6
355L	4-8	655	355	2×M63	1530	95	M20×42	170	15	25	86	740	680	800	24x8	6

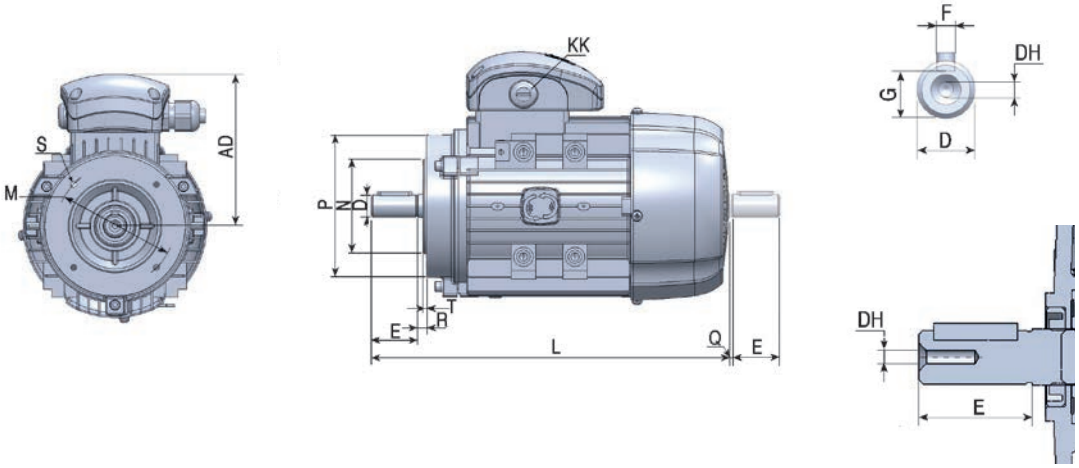

B14

DIMENSIONS (mm)																
TYPE	POLES	AD	H	KK	L	D	DH	E	Q	F	G	B14				
												M	N	P	S	T
80	2-8	130	80	M20	283	19	M6×16	40	3	6	15,5	100	80	120	M6	3
90S	2-8	145	90	M20	330	24	M8×19	50	5	8	20	115	95	140	M8	3
90L	2-8	145	90	M20	358	24	M8×19	50	5	8	20	115	95	140	M8	3
100	2-8	157	100	M20	393	28	M10×22	60	5	8	24	130	110	160	M8	3,5
112M	2-8	177	112	M25	410	28	M10×22	60	5	8	24	130	110	160	M8	3,5
132S	2-8	197	132	M32	480	38	M12×28	80	5	10	33	165	130	200	M10	3,5
132M	2-8	197	132	M32	516	38	M12×28	80	5	10	33	165	130	200	M10	3,5
160M	2-8	255	160	2×M40	613	42	M16×36	110	5	12	37	215	180	250	M12	4
160L	2-8	252	160	2×M40	708	42	M16×36	110	5	12	37	215	180	250	M12	4

B5R/B14

DIMENSIONS (mm)																
TYPE	POLES	AD	H	KK	L	D	DH	E	Q	F	G	B5R / B14B				
												M	N	P	S	T
80	2-8	130	80	M20	283	19	M6×16	40	3	6	15,5	130	110	160	M8	3,5
90S	2-8	145	90	M20	330	24	M8×19	50	5	8	20	130	110	160	M8	3,5
90L	2-8	145	90	M20	358	24	M8×19	50	5	8	20	130	110	160	M8	3,5
100	2-8	157	100	M20	393	28	M10×22	60	5	8	24	165	130	200	M10	3,5
112M	2-8	177	112	M25	410	28	M10×22	60	5	8	24	165	130	200	M10	3,5
132S	2-8	197	132	M32	480	38	M12×28	80	5	10	33	215	180	250	M10	4
132M	2-8	197	132	M32	516	38	M12×28	80	5	10	33	215	180	250	M10	4
160M	2-8	255	160	2×M40	613	42	M16×36	110	5	12	37	265	230	300	14x4	5
160L	2-8	252	160	2×M40	708	42	M16×36	110	5	12	37	265	230	300	14x4	5

Foras®

WATER PUMPS

BOOSTER SET

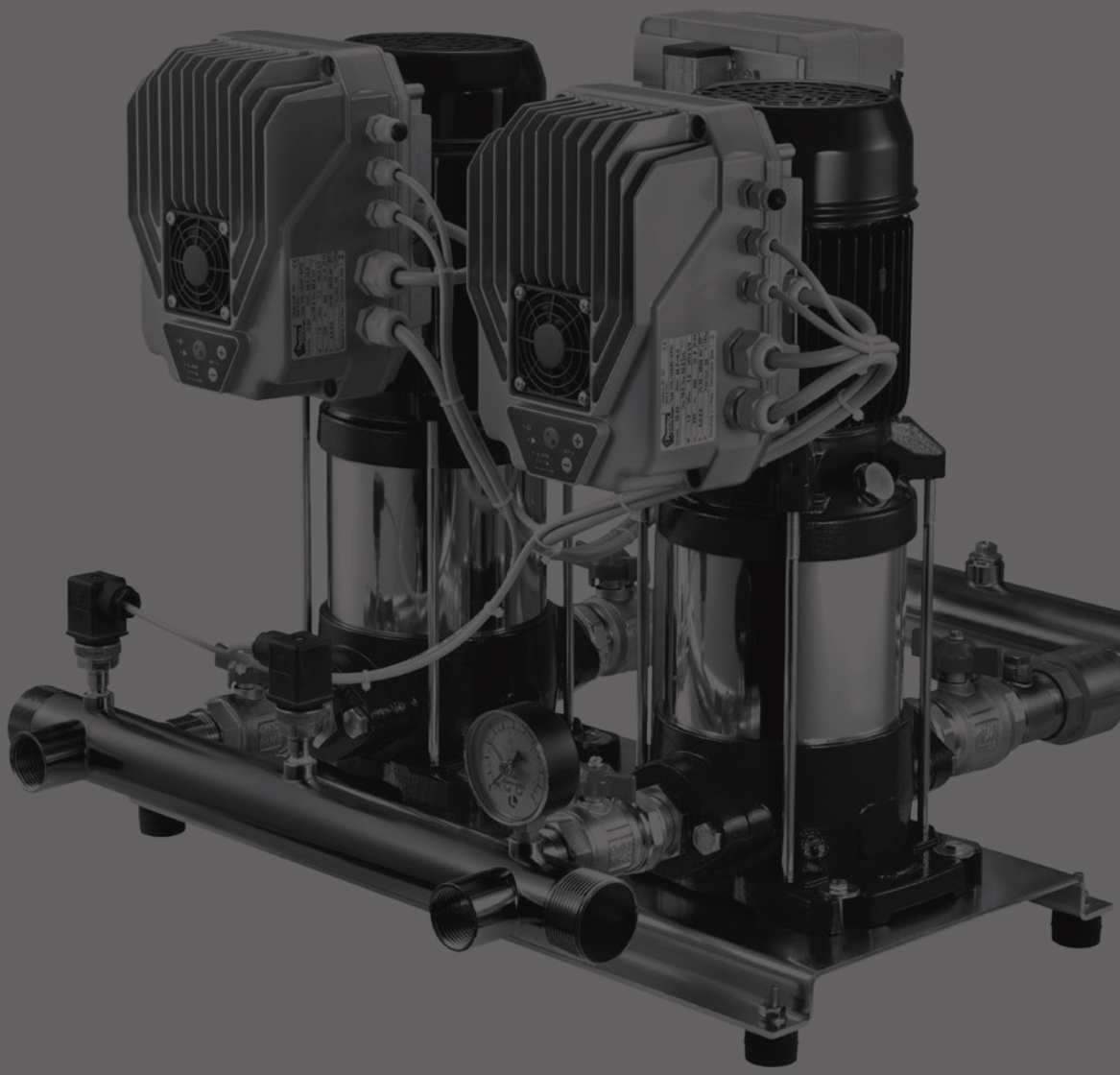

AQUADOMUS

Booster set

Aquadomus is an integrated 'Plug&Play' system to manage water pressurization for domestic and residential applications. The electronic control (E-IPFC) manages the operation of the system in order to maintain the pressure constant even if the conditions of use change. It can be driven and monitored by a dedicated app "UnyConnect".
It consists of a multistage pump, a permanent magnet synchronous motor, an electronic inverter control, an expansion tank, a no return valve, a pressure sensor, a cable with plug.

Construction features	
Pump body	stainless steel AISI 304
Motor bracket	aluminum
Impellers, diffusers	Noryl®
Mechanical seal	ceramic-graphite-EPDM
Motor shaft	stainless steel AISI 303
Liquid temperature	-5 ÷ +35 °C
Rated pressure	max 7 bar
4 poles synchronus motor with permanent magnet	4200 rpm
Input voltage	1~ 230V - 50Hz 1~ 220V - 60Hz 1~ 115V - 50/60Hz
Insulation class	F
Protection degree	IPX4
Max rated current	3,7 A
Max absorbed power P1	820W
Cable	H07 RNF 1,5 m

Constant pressure even if the conditions of use change

Dedicated UnyConnect App for programming and monitoring (compatible with Ios and Android)

Bluetooth smart pump

UNYCONNECT

Dedicated APP for control and programming of Aquadomus and variable speed drives EPIC-A and IPFC

APP FUNCTIONALITY

- **Monitor**: monitoring several operative parameters. Obtaining energy consumption statistics and check alarm history

- **Program**: create programs, save them in the archive, copy them to other devices and share them among multiple users

- **Archive**: create reports with the ability to insert notes, images and send them by e-mail or keep them in the digital archive

- **Remote**: remotely control an Aquadomus, or other pumps equipped with EPIC-A or IPFC inverters, via Wi-Fi or GSM by using a nearby smartphone as a modem

- **Manuals**: access manuals and supllementary technical documentation

- **Guide**: receive online assitance on parameters and alarms

Available on the Google Play

Download on the App Store

AQUADOMUS

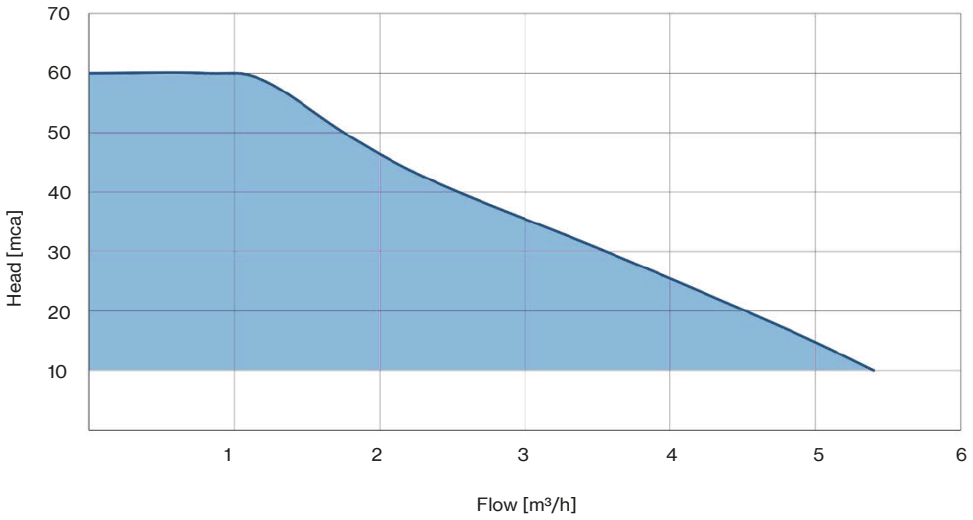

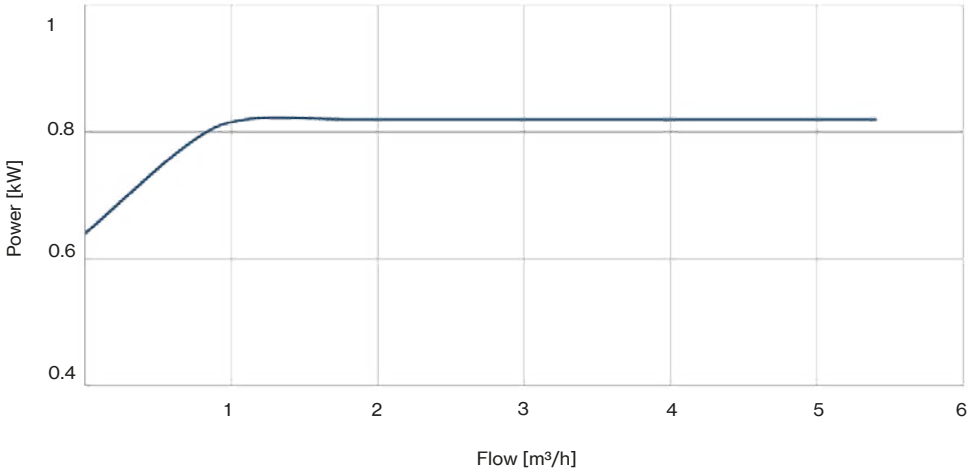

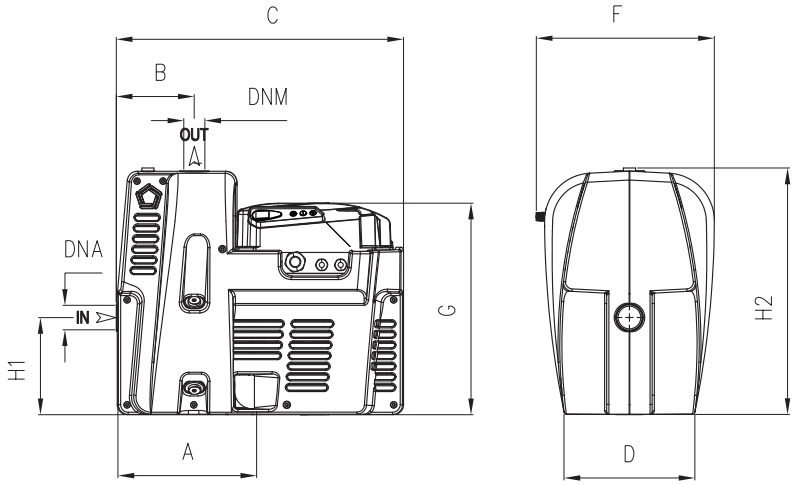

TYPE - 60 Hz	DIMENSIONS (mm)										Kg
	A	B	C	D	F	G	H1	H2	DNA	DNM	
Aquadomus	166,8	103	377	173	235	280	128	325	1" G	1" G	11

LOTS				
TYPE	TRUCK		CONTAINER	
	PALLET (cm)	N° pumps	PALLET (cm)	N° pumps
Aquadomus	80×120×150	36	80×120×185	45

AQUASET

Booster set

JXF 100N-24 L

JXF BOX 100N-24 L

PE 50-24 L

Fixed speed booster set with one pump and membrane tank

DESCRIPTION

Compact, built-in, fully automatic pressurization units consisting of a single pump, membrane tank, pressure switch, pressure gauge, connectors and cable with plug. They are ready for installation and suitable for pressure boosting in water systems for domestic use and industrial applications.

FUNCTIONING

The pump switches on automatically when the pressure drops below the minimum set value. When water demand ends, the pump will fill up the tank and then it turns off when the pressure reaches the maximum set value.

TYPE - 60 Hz		P2		P1		Pipe		Tank capacity					
1~	3~			1~	3~	Suction	Delivery	8 L	20-24 L			50 L	100 L
		HP	kW	kW				cylindrical	spherical	cylindrical	inox	cylindrical	cylindrical
PL 50	-	0,5	0,37	0,5	-	1	1	■	■	-	-	-	-
PL 100	-	1	0,74	1,11	-	1	1	■	■	-	-	-	-
PE 50	-	0,5	0,37	0,5	-	1	1	■	■	-	-	-	-
PE 100	-	1	0,74	1,1	-	1	1	■	■	■	-	-	-
JA 60	-	0,6	0,44	0,7	-	1	1	■	-	■	-	-	-
JA 86	-	0,8	0,59	0,82	-	1	1	■	-	■	-	■	-
JA 106N	-	1	0,74	1,04	-	1	1	-	■	■	-	■	-
JA 126	-	1,2	0,88	1,14	-	1	1	-	■	■	-	■	-
JA 146	-	1,5	1,1	1,3	-	1	1	-	■	■	-	■	-
JAM 150	**JAM 150T**	2	1,5	1,9	1,8	1½	1¼	-	-	-	-	-	■
JAM 200	**JAM 200T**	2,5	1,84	2,2	2,1	1½	1¼	-	-	-	-	-	■
JAM 300	**JAM 300T**	3	2,2	2,7	2,5	1½	1¼	-	-	-	-	-	■
JXF 106N	-	1	0,74	1,04	-	1	1	-	-	■	■	■	-
JXF 126	-	1,2	0,88	1,14	-	1	1	-	-	■	■	■	-
JXF 146	-	1,5	1,1	1,3	-	1	1	-	-	■	■	■	-
JA 150	**JA 150T**	2	1,5	1,8	1,7	1½	1	-	-	■	-	■	-
JA 200	**JA 200T**	2,5	1,85	2,3	2,2	1½	1	-	-	-	-	■	■
JA 300	**JA 300T**	3	2,2	2,8	2,5	1½	1	-	-	-	-	-	■
PA 80	-	0,8	0,59	0,8	-	1¼	1	-	-	■	-	-	-
PA 100	-	1	0,74	1,02	-	1¼	1	-	-	■	-	-	-
PA 150	**PA 150T**	2	1,5	1,8	1,7	1¼	1	-	-	■	-	■	-
PA 200	**PA 200T**	2,5	1,85	2,3	2,2	1¼	1	-	-	-	-	■	-
JXM 105	-	1	0,74	1,07	-	1	1	-	-	■	■	-	-
JXM 125	-	1,2	0,88	1,27	-	1	1	-	-	■	■	-	-
P 3A-80/3	**P 3A-80/3T**	0,8	0,6	1	0,9	1	1	-	-	■	■	■	■
P 3A-120/4	**P 3A-120/4T**	1,2	0,9	1,25	1,2	1	1	-	-	■	■	■	■
P 5A-120/3	**P 5A-120/3T**	1,2	0,9	1,4	1,35	1	1	-	-	■	■	■	■
P 5A-180/4	**P 5A-180/4T**	1,8	1,3	1,9	1,75	1	1	-	-	■	■	■	■
P 3SA-80/3	**P 3SA-80/3T**	0,8	0,6	1	0,9	1	1	-	-	■	■	■	■
P 3SA-120/4	**P 3SA-120/4T**	1,2	0,9	1,25	1,2	1	1	-	-	■	■	■	■
P 5SA-120/3	**P 5SA-120/3T**	1,2	0,9	1,4	1,35	1	1	-	-	■	■	■	■
P 5SA-180/4	**P 5SA-180/4T**	1,8	1,3	1,9	1,75	1	1	-	-	■	■	■	■

AQUASET+VSD

Variable speed booster pump set with membrane tank

DESCRIPTION

AQUASET+VSD are single-phase automatic booster sets consisting of a horizontal pump operated and controlled by EPIC variable speed drive. They provide constant pressure regardless of changes on flow demand, making them suitable for low or missing pressure in domestic systems and small industrial applications.

FEATURES

- Variable speed drive EPIC (1~ 220V-in, 3~ 220V-out)
- Three-phase horizontal pump
- Stainless steel 5-way connector with built-in non return valve
- Pressure sensor
- Pressure gauge
- 8 liters membrane tank
- Cable with plug

FUNCTIONING

If the pressure in the network drops the pump will starts and gradually speeds up to provide with the set pressure. When the water demand decreases, the pressure will rise causing the pump speed to slow down and eventually to stop the pump if demand ceases. The pump will remain on standby waiting to start at the next water demand.

SELECTION

The table below shows the pump series available as AQUASET+VSD. Consult the catalog at the relative pump series for specifics and characteristic curves.

VSD	HORIZONTAL 3~ PUMP TYPE	max P2	
		HP	kW
EPIC	JA / JAM	2	1,5
	JA 150 / 300	2	1,5
	JXF	1	0,74
	JXM	1,2	0,88
	KBJ	2	1,5
	KM	2	1,5
	SE	1,5	1,1
	KB	2	1,5
	P 3, P 3S	1,8	1,3
	P 5, P 5S	1,8	1,3
	P 7, P 7S	2,5	1,84
	P 9, P 9S	1,8	1,3

DRAINAGE AND SEWAGE

DRAINAGE AND SEWAGE PUMPS

Different models available in relation to performance requirements: centrifugal, Vortex, single or double channels pumps suitable for clean water, sewage and slurry. Impeller with grinding system available.

Applications:

- Emptying of cisterns
- Fountains
- Swimming pools
- Draining of liquids from collection tanks and sumps

DRAINAGE AND SEWAGE PUMPS

Drainage

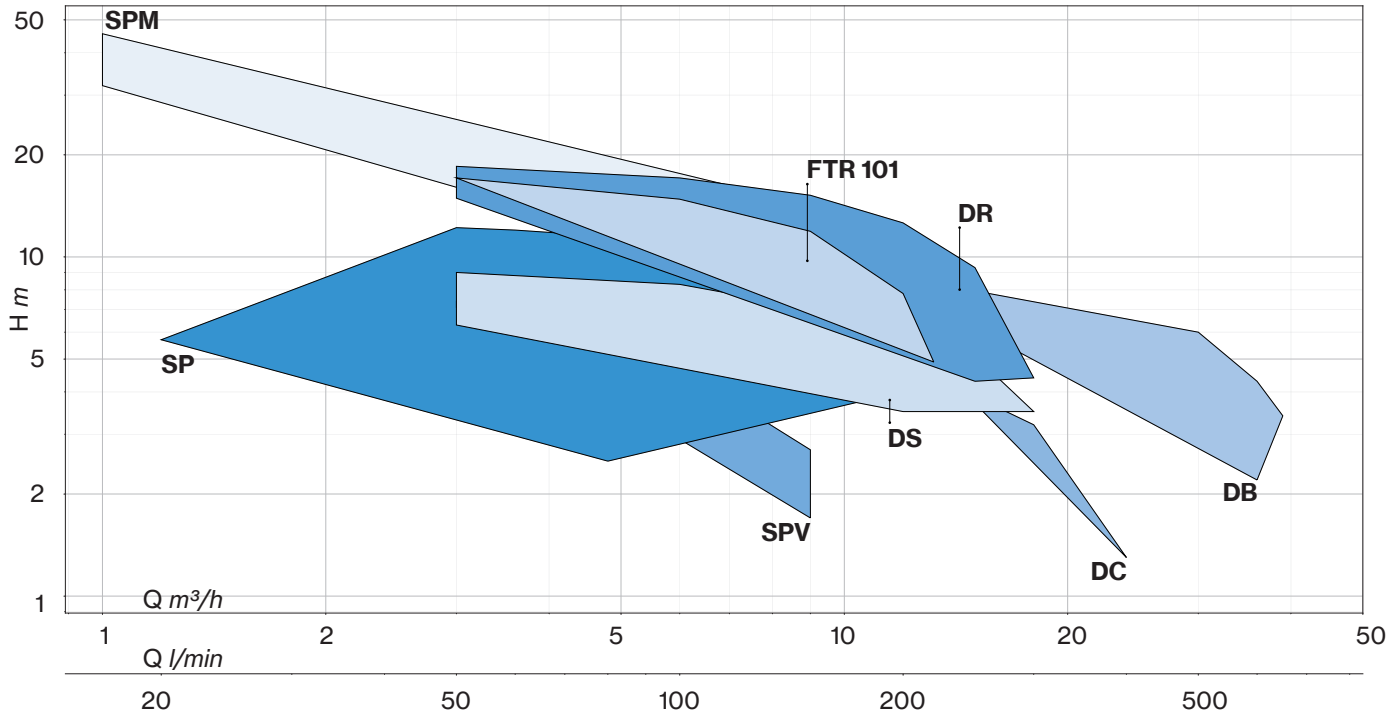

Sewage

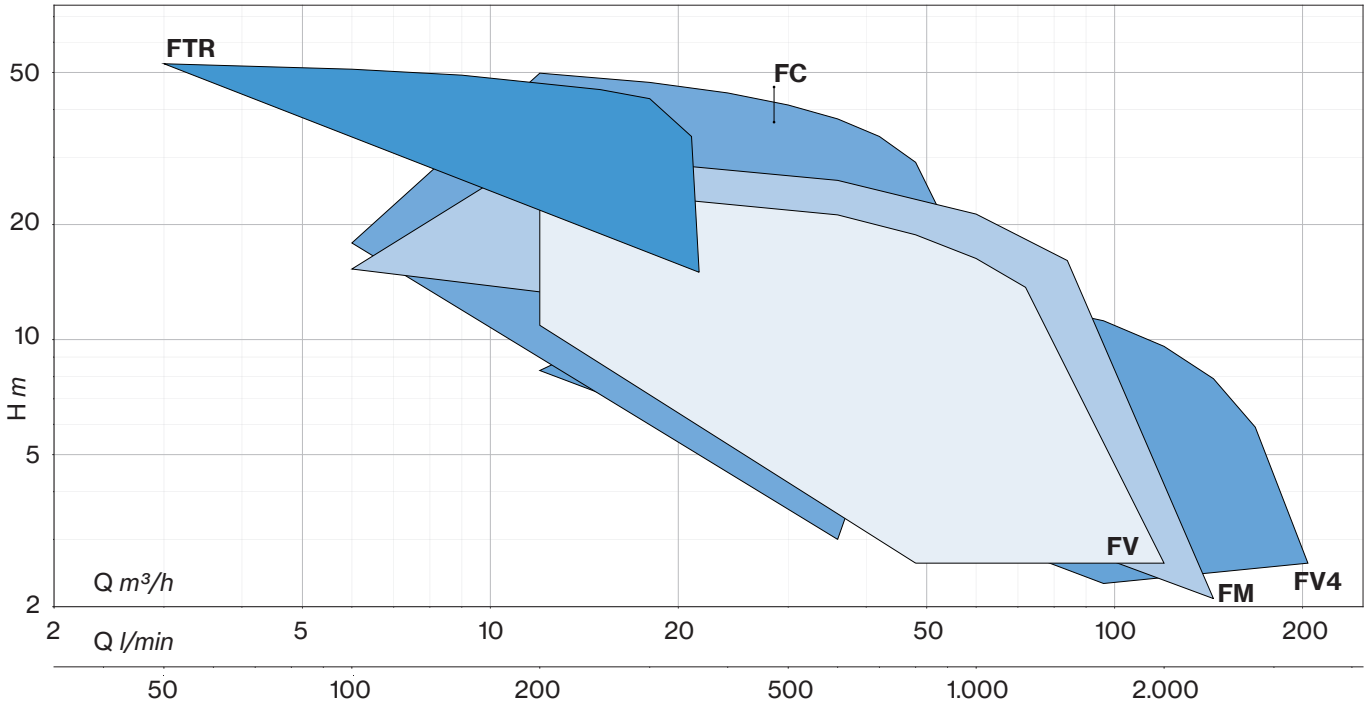

SP/SPV

Drainage
Plastic

Drainage pumps for emptying pits and cisterns, for gardening; completely constructed in anticorrosive material. Brass insert on the delivery opening (SP 80/100 - SPV 80/100). The single-phase version includes a built-in capacitor, a thermal protector and it can be equipped with a float switch.

SP 40
SP 80
SPV 80

SP 60
SP 100
SPV 100

White water

Construction features

Pump body	polypropylene
Impeller	Noryl®
Mechanical seal	double lip seal
Motor shaft	stainless steel AISI 416 with ceramic bush
Free passage	Ø max 4 mm (SP 40/60) Ø max 7 mm (SP 80/100) Ø max 15 mm (SPV)
Max submergence	5 m
Liquid temperature	0 - 40 °C
Cable	H05 RN8F, 10 m (SP 40/60) H07 RN8F, 10 m (SP 80/100, SPV 80/100)
G	float switch

SPV 80 G

- **T** 3~
- 1~ without float switch
- **G** 1~ with float switch
- pump type

Motor

2 poles induction motor	1~ 1x220V - 60H (with thermal protection) 3~ 3×380V - 60Hz (SPV 80/100)
Insulation class	F
Protection degree	IPX8

1~ 110V - 60Hz	
TYPE	I (A)
SP 40	2,0
SP 60	4,2
SP 80	7,4
SP 100	10,2
SPV 80	5,2
SPV 100	7,6

LOTS				
TYPE	TRUCK		CONTAINER	
	PALLET (cm)	N° pumps	PALLET (cm)	N° pumps
SP 40-60	80×120×175	135	80×120×205	162
SP 80÷100(T)	80×120×145	57	80×120×190	76
SPV 80÷100(T)	80×120×145	57	80×120×190	76

SP

SPV

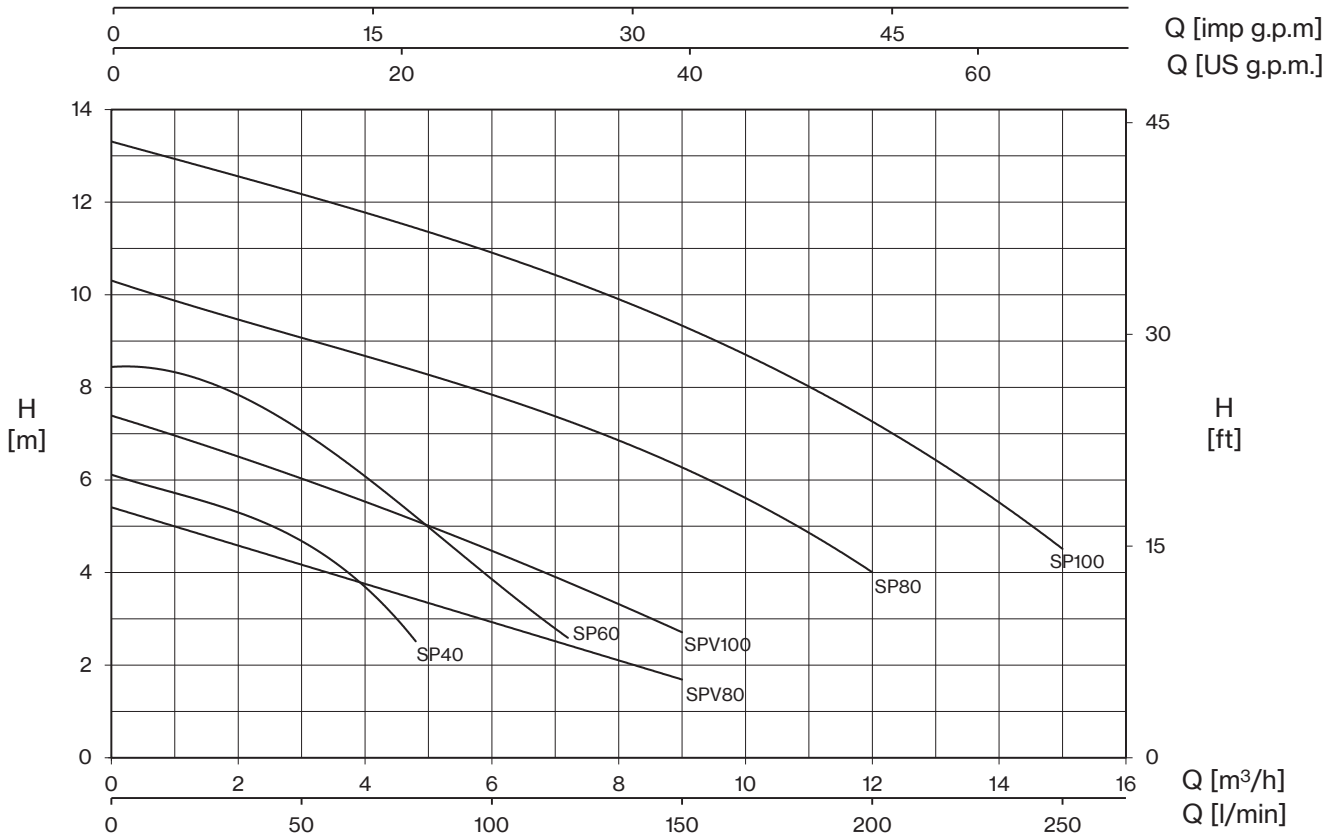

TYPE - 60 Hz		P1	CURRENT		Q (m³/h - l/min)										
1~	3~		1~ 220V	3~ 380V	0	1,2	2,4	3	3,6	4,8	6	7,2	9	12	15
					0	20	40	50	60	80	100	120	150	200	250
		kW	A		H (m)										
SP 40 (G)	**-**	0,2	1	-	6,1	5,7	5,0	4,7	4,2	2,5					
SP 60 (G)	**-**	0,4	2,1	-	8,5	8,1	7,6	7,2	6,7	5,0	3,9	2,6			
SP 80 (G)	**SP 80T**	0,8	3,7	1,8	10,3			9,1	8,8	8,3	7,8	7,3	6,3	4,0	
SP 100 (G)	**SP 100T**	1,05	5,1	2,3	13,3			12,2	12,0	11,5	10,9	10,3	9,3	7,3	4,5

TYPE - 60 Hz		P1	CURRENT		Q (m³/h - l/min)			
1~	3~		1~ 220V	3~ 380V	0	3	6	9
					0	50	100	150
		kW	A		H (m)			
SPV 80 (G)	**SPV 80T**	0,5	2,6	1,2	5,4	4,2	2,9	1,7
SPV 100 (G)	**SPV 100T**	0,75	3,8	1,7	7,4	5,8	4,7	2,7

SP/SPV

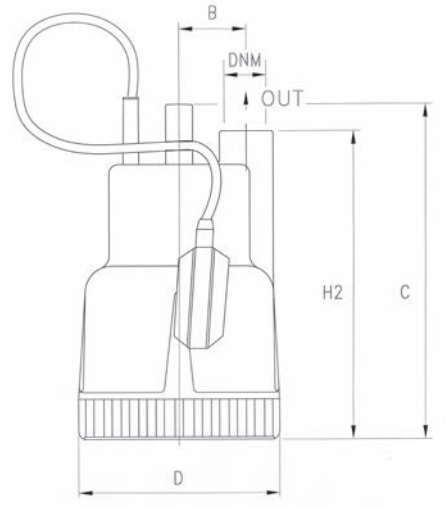

TYPE		DIMENSIONS (mm)								Kg
1~	3~	B	C	D	H2	DNM	I	L	M	
SP 40 (G)	-	50	250	150	230	1” G	170	200	320	5
SP 60 (G)	-	50	250	150	230	1” G	170	200	320	6,5
SP 80 (G)	**SP 80T**	55.5	296	176	276	1” ¼ G	185	230	310	8,5
SP 100 (G)	**SP 100T**	55.5	296	176	276	1” ¼ G	185	230	310	10

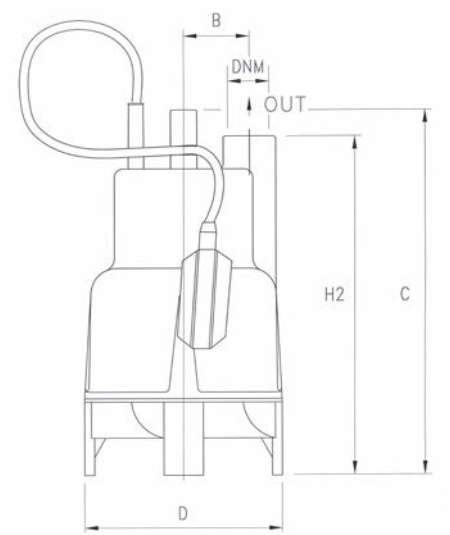

TYPE		DIMENSIONS (mm)								Kg
1~	3~	B	C	D	H2	DNM	I	L	M	
SPV 80 (G)	**SPV 80T**	55.5	331	176	310	1” ¼ G	185	230	345	8,5
SPV 100 (G)	**SPV 100T**	55.5	331	176	310	1” ¼ G	185	230	345	10

SPM

Multistage drainage pumps for clean water made of technopolymer, designed for pumping liquids from wells, tanks, and reservoirs, pressurising domestic systems, and irrigating gardens and vegetable plots.
The single-phase version includes a built-in capacitor and thermal protector, and can be equipped with a float switch. Suitable for installation with the Hidrotank flow controller. An expansion tank must be installed on the pump discharge line.

White water

Construction features

Pump body	technopolymer
Impeller, diffusers	Noryl®
Shell, motor cover, base support	Noryl®
Mechanical seal	double seal with oil barrier: silicon carbide on pump side, sealing ring on motor side
Motor shaft	stainless steel AISI 303
Max submergence	5 m
Liquid temperature	0 - 35 °C
Cable	H07 RN8F, 10 m
G	float switch

Motor

2 poles induction motor	3~ 380V - 60Hz 1~ 220V - 60Hz (with thermal protection)
Insulation class	F
Protection degree	IPX8

LOTS				
TYPE	TRUCK		CONTAINER	
	PALLET (cm)	N° pumps	PALLET (cm)	N° pumps
SPM(T)	85×110×160	48	85×110×200	64

SPM 5/2 G

- **T** 3~
- 1~ without float switch
- **G** 1~ with float switch
- No. of impellers
- nominal flow-rate m³/h
- pump type

SPM

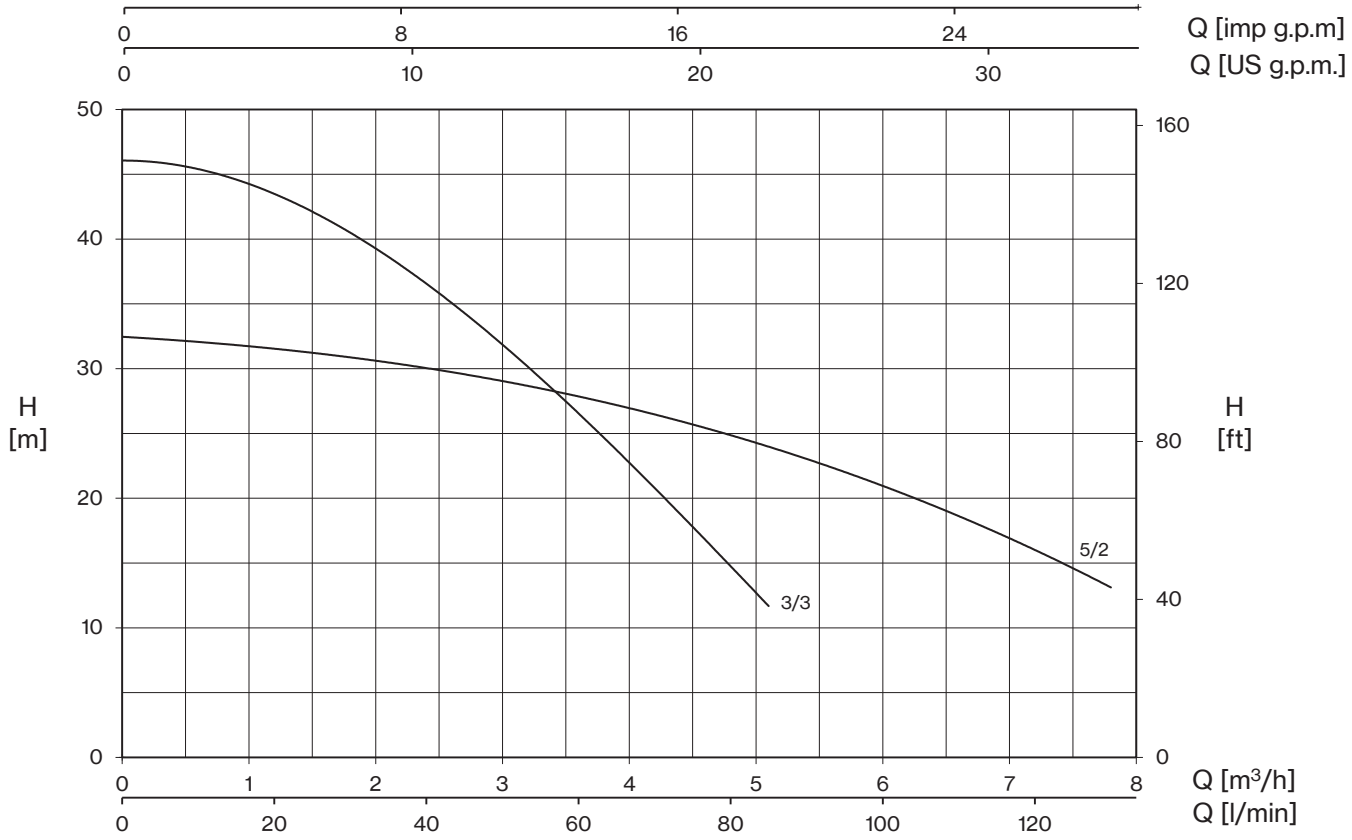

TYPE - 60 Hz		P1	CURRENT		Q (m³/h - l/min)									
1~	3~		1~ 220V	3~ 380V	0	0,6	1,2	2,4	3,6	4,8	5,1	6	7,2	7,8
					0	10	20	40	60	80	85	100	120	130
		kW	A		H (m)									
SPM 5/2 G	**SPM 5/2T**	1	4,7	1,8	32,5	32,0	31,5	30,2	27,8	24,8	23,9	21,1	16,0	13,1
SPM 3/3 G	**SPM 3/3T**	0,94	4,4	1,8	46,0	45,5	43,5	36,5	26,5	15,0	11,5	-	-	-

mt: minimum working level

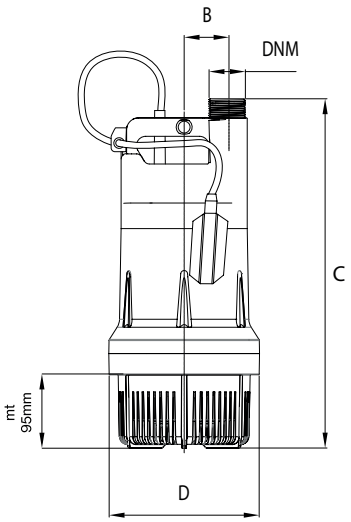

TYPE		DIMENSIONS (mm)							Kg
1~	3~	B	C	D	DNM	I	L	M	
SPM 5/2 G	**SPM 5/2T**	56	454	196	1" ½	264	203	482	10
SPM 3/3 G	**SPM 3/3T**	56	454	196		264	203	482	10,5

DR

Drainage
High Head

Drainage pumps with open impeller for pumping liquids with suspended solids. Characterized by high head. The single-phase version includes a built-in capacitor, a thermal protector and it can be equipped with a float switch.

White water

Construction features

Painting	cataphoresis
Pump body	cast iron
Shell, motor cover, base support	stainless steel
Impeller	brass
Mechanical seal	double seal with oil barrier: silicon carbide on pump side, sealing ring on motor side
Motor shaft	stainless steel AISI 430
Free passage	Ø max 10 mm
Max submergence	5 m
Liquid temperature	0 - 40 °C
Cable	H07 RN8F, 10 m
G	float switch

Motor

2 poles induction motor	3~ 3×380V - 60Hz 1~ 1×220V - 60Hz (with thermal protection)
Insulation class	F
Protection degree	IPX8

LOTS				
TYPE	TRUCK		CONTAINER	
	PALLET (cm)	N° pumps	PALLET (cm)	N° pumps
DR(T)	80×120×125	57	80×120×165	76

DR 100 G

- **T** 3~
- 1~ without float switch
- **G** 1~ with float switch

pump type

DR

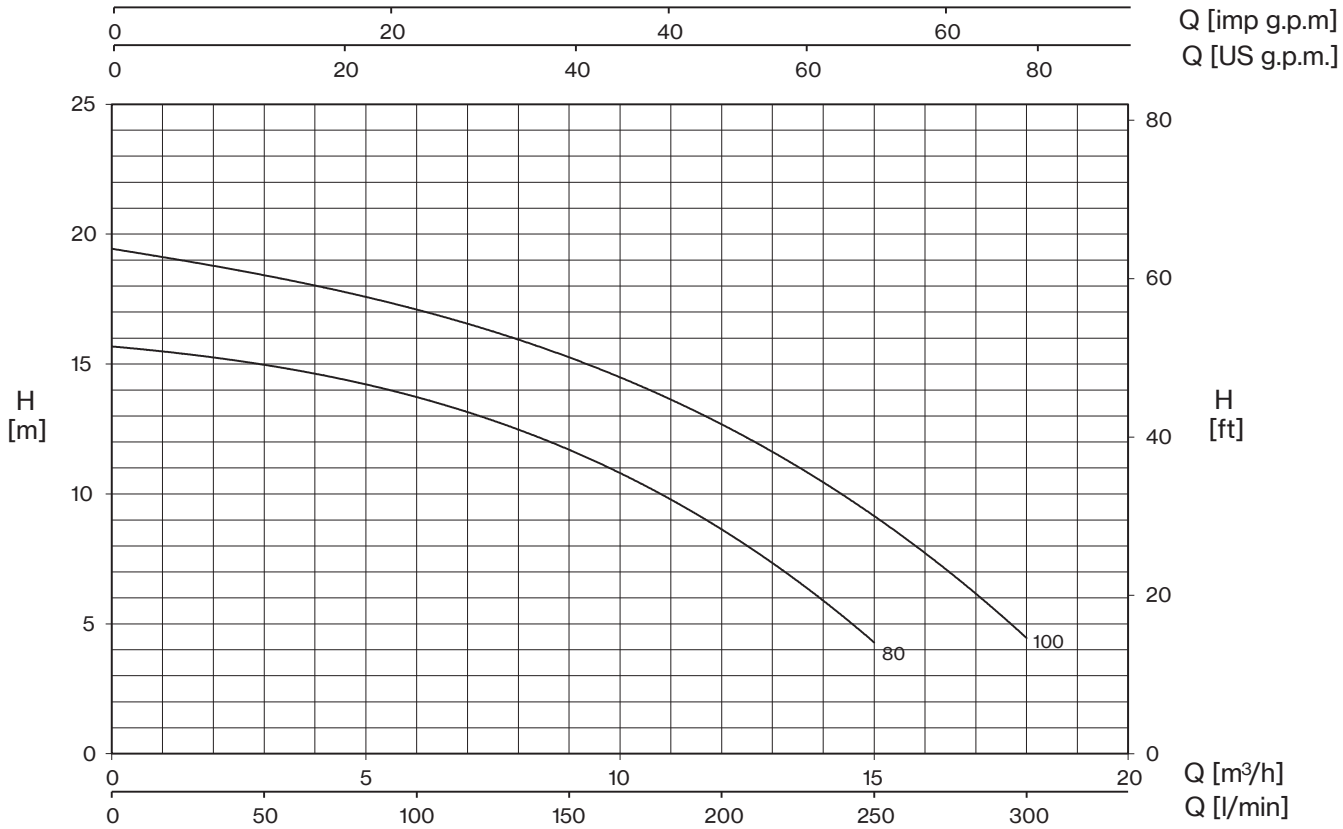

TYPE - 60 Hz		P1	CURRENT		Q (m³/h - l/min)						
1~	3~		1~ 220V	3~ 380V	0	3	6	9	12	15	18
					0	50	100	150	200	250	300
		kW	A		H (m)						
DR 80 (G)	**DR 80T**	0,98	4,3	2,1	15,7	14,9	13,8	11,7	8,6	4,3	
DR 100 (G)	**DR 100T**	1,37	6,2	2,8	19,4	18,5	17,1	15,2	12,6	9,3	4,4

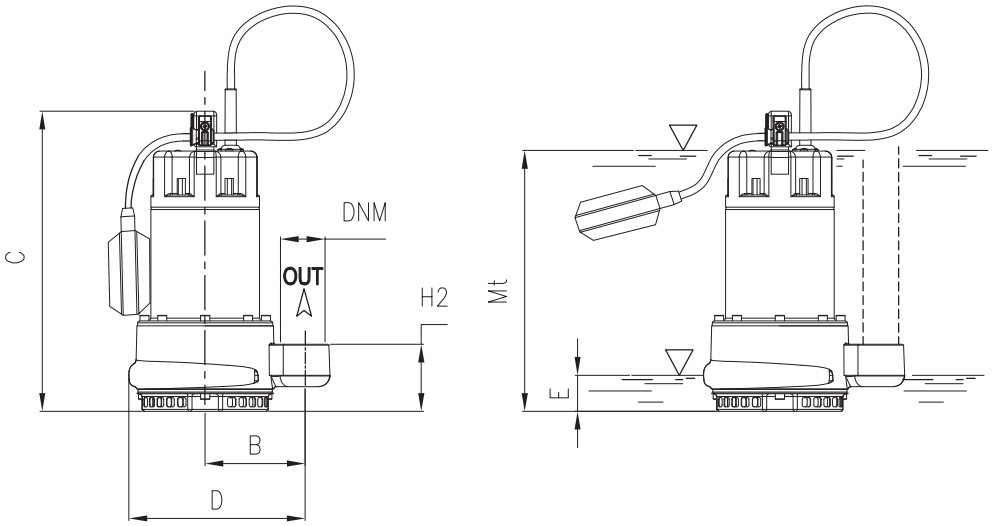

E: maximum emptying level
Mt: minimum liquid level for continuos duty

TYPE		DIMENSIONS (mm)										Kg
1~	3~	B	C	D	E	H2	Mt	DNM	I	L	M	
DR 80 (G)	**DR 80T**	105	337	288	53	74	284	1" ½ G	180	255	380	14,5
DR 100 (G)	**DR 100T**	105	337	288	53	74	284		180	255	380	16

FC

Sewage
High Head

FC 160-310

FC 410-1000 T

FC 410-1000 T/P

Centrifugal drainage high head pumps ideal for civil and industrial applications, specifically designed for very heavy use. Available in the mobile or permanent versions with coupling feet.

Grey water

Construction features

Painting	cataphoresis
Pump body	cast iron
Impeller	cast iron
Mechanical seal	double seal with oil barrier: silicon carbide on pump side, ceramic-graphite on motor side
Motor shaft	stainless steel AISI 304
Free passage	Ø max 10 mm
Max submergence	20 m
Liquid temperature	0 - 40 °C
Cable	H07 RN8F, 10 m
Bolts	A2 stainless steel
Foot support	galvanized iron
Gaskets	NBR rubber

Motor

2 poles induction motor	3~ 220/380V - 60Hz 1~ 220V - 60Hz required run capacitor (35µF for 1,5HP model, 50µF for 2HP model)
Insulation class	F
Protection degree	IPX8

LOTS				
TYPE	TRUCK		CONTAINER	
	PALLET (cm)	N° pumps	PALLET (cm)	N° pumps
FC 160÷310(T)	85×110×145	18	85×110×190	27
FC 410-560(T)	85×110×170	12	85×110×170	12
FC 750-1000(T)	100×120190	12	100×120×190	12

FC 560 T -CF

- -CF: counter-flange — not included / CF included
- T: motor — 1~ / T 3~
- FC 560: pump type

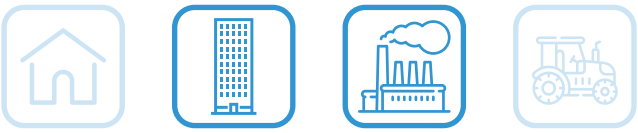

FC

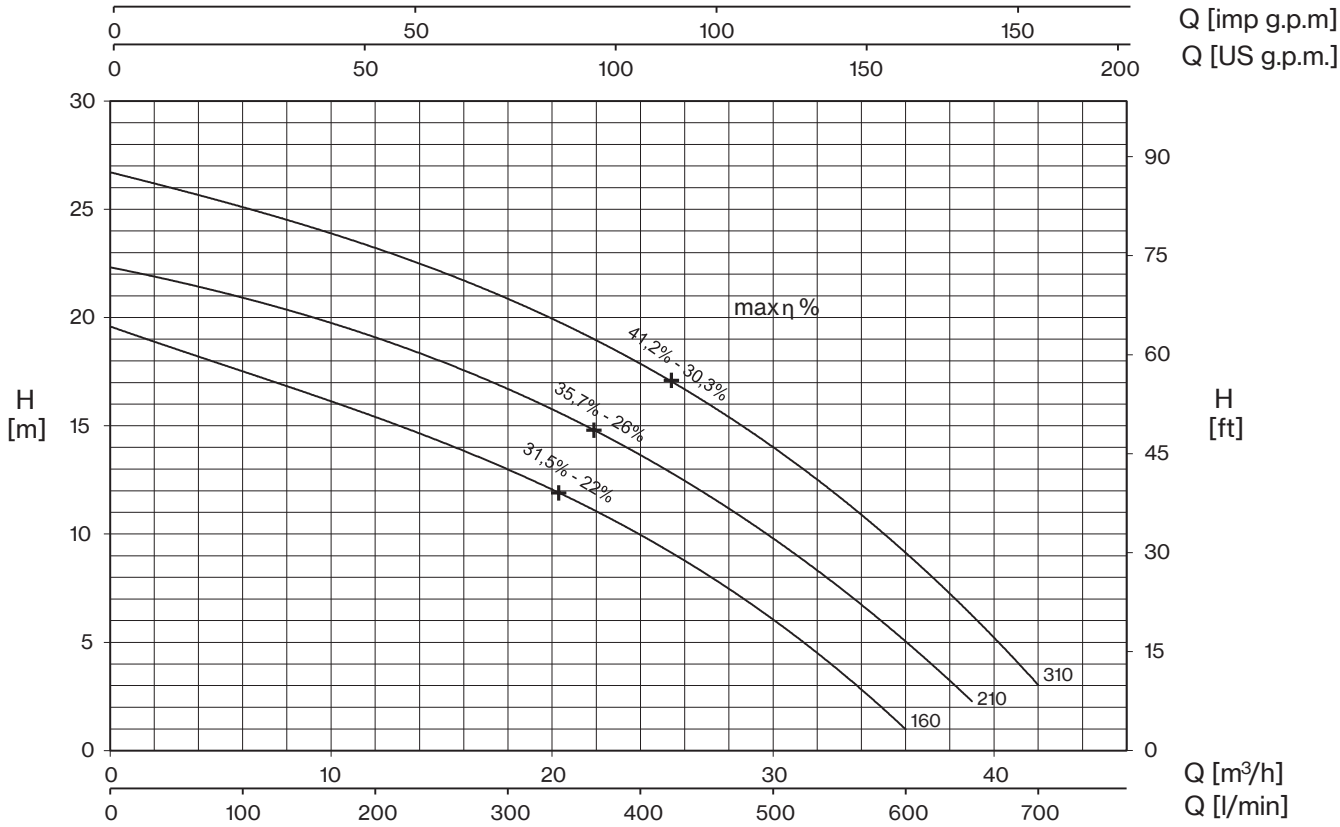

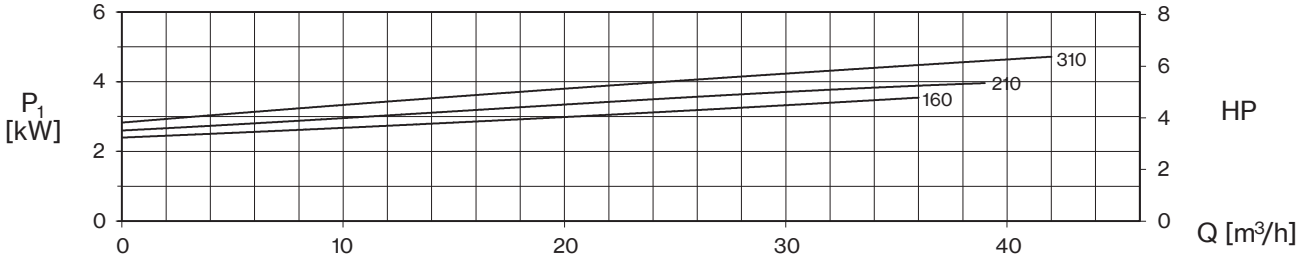

TYPE - 60 Hz		CURRENT			
1~	3~	1~ 220V	3~ 220V	3~ 380V (*)	220/380 V ⅄ / △
FC 160	**FC 160T**	18,6	10,6	6,1	-
FC 210	**FC 210T**	20,6	12,3	7,1	-
-	**FC 310T**	-	14,5	8,4	-

(*) no standard execution

+ max η %

max hydraulic efficiency and respective total efficiency

TYPE - 60 Hz		P2		P1		Q (m³/h - l/min)								
1~	3~			1~	3~	0	6	12	18	24	30	36	39	42
						0	100	200	300	400	500	600	650	700
		HP	kW	kW		H (m)								
FC 160	**FC 160T**	1,5	1,1	3,9	3,6	19,6	17,5	15,4	13,0	10,0	6,0	1		
FC 210	**FC 210T**	2	1,5	4,3	4,0	22,3	21,0	19,0	16,7	13,7	9,8	5,0	2,3	
-	**FC 310T**	3	2,2	-	4,7	26,6	25,3	23,3	20,7	17,7	14,1	9,3	6,3	2,9

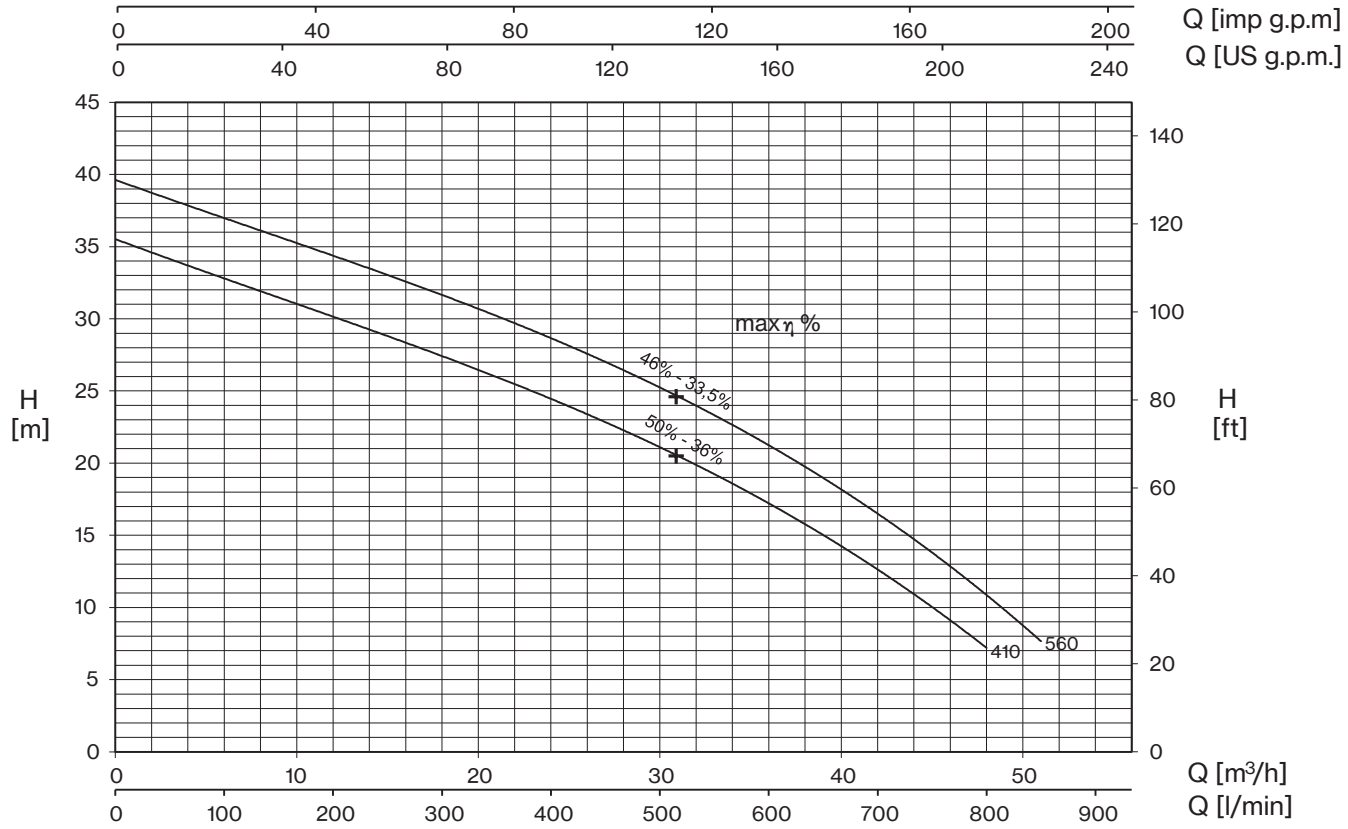

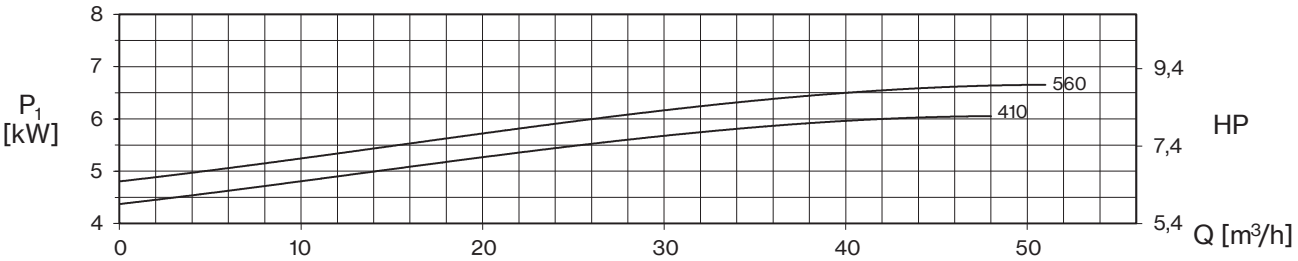

TYPE - 60 Hz	CURRENT		
3~	3~ 220V	3~ 380V (*)	220/380 V ⅄ / △
FC 410T	18,0	10,4	-
FC 560T	20,3	11,7	-

(*) no standard execution

+ max η %

max hydraulic efficiency and respective total efficiency

TYPE - 60 Hz	P2		P1	Q (m³/h - l/min)									
3~				0	6	12	18	24	30	36	42	48	51
				0	100	200	300	400	500	600	700	800	850
	HP	kW	kW	H (m)									
FC 410T	4	3	6,1	35,5	32,9	30,0	27,5	24,5	21,0	17,3	12,6	7,2	
FC 560T	5,5	4	6,7	39,5	37,2	34,4	31,6	28,6	25,1	21,3	16,6	11,0	7,5

FC

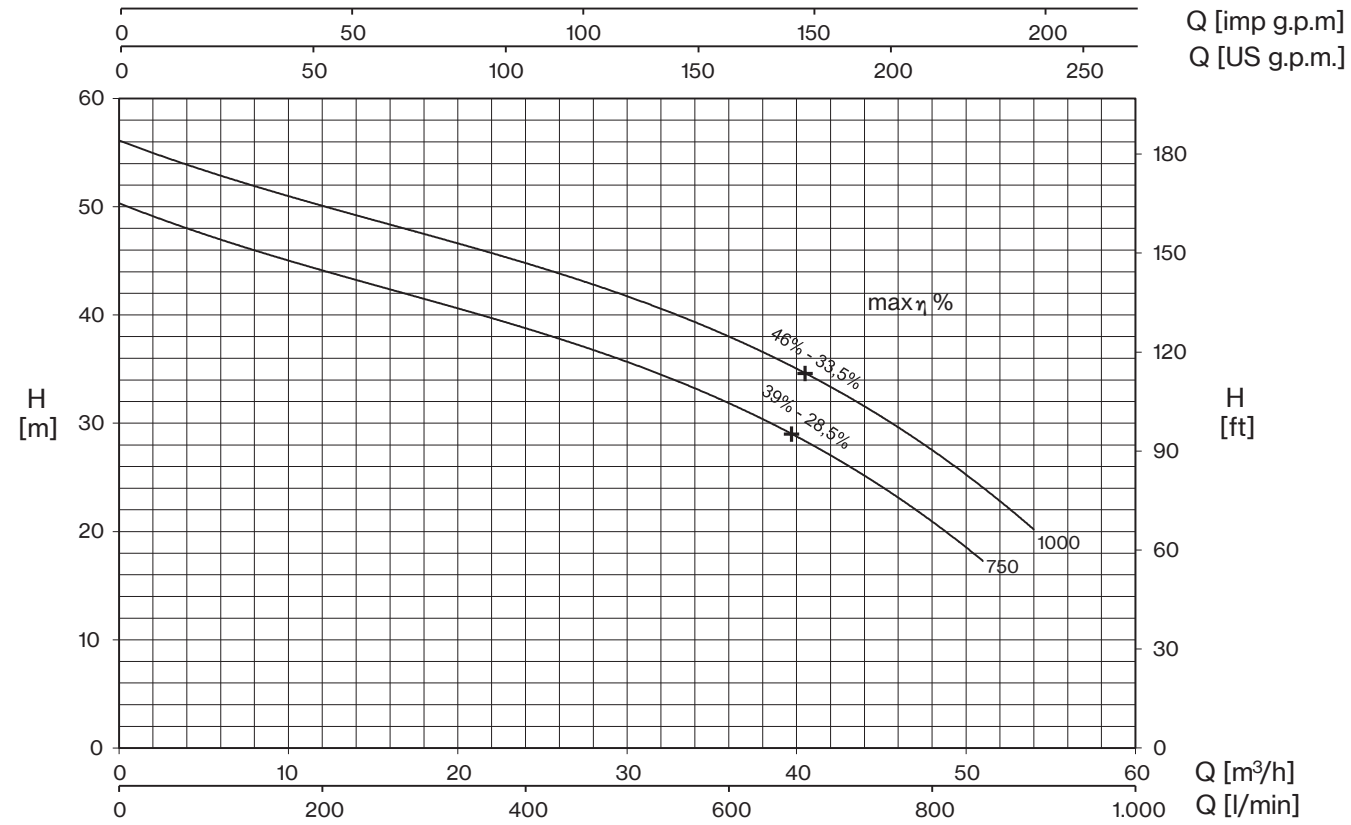

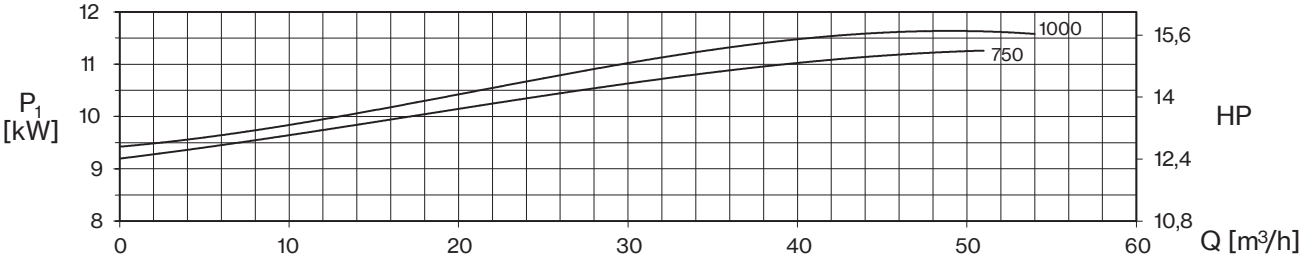

TYPE - 60 Hz	CURRENT		
3~	3~ 220V	3~ 380 V (*)	220/380 V ⅄ / △
FC 750T	-	20,2	35,0
FC 1000T	-	20,8	36,0

(*) no standard execution

+ max η %

max hydraulic efficiency and respective total efficiency

TYPE - 60 Hz	P2		P1	Q (m³/h - l/min)										
3~				0	6	12	18	24	30	36	42	48	51	54
				0	100	200	300	400	500	600	700	800	850	900
	HP	kW	kW	H (m)										
FC 750T	7,5	5,5	11,1	50,2	47,1	44,3	41,5	38,7	35,4	31,7	27,5	21,1	17,0	
FC 1000T	10	7,5	11,7	56,0	53,0	50,2	47,6	44,7	41,5	37,9	33,5	27,8	24,2	19,9

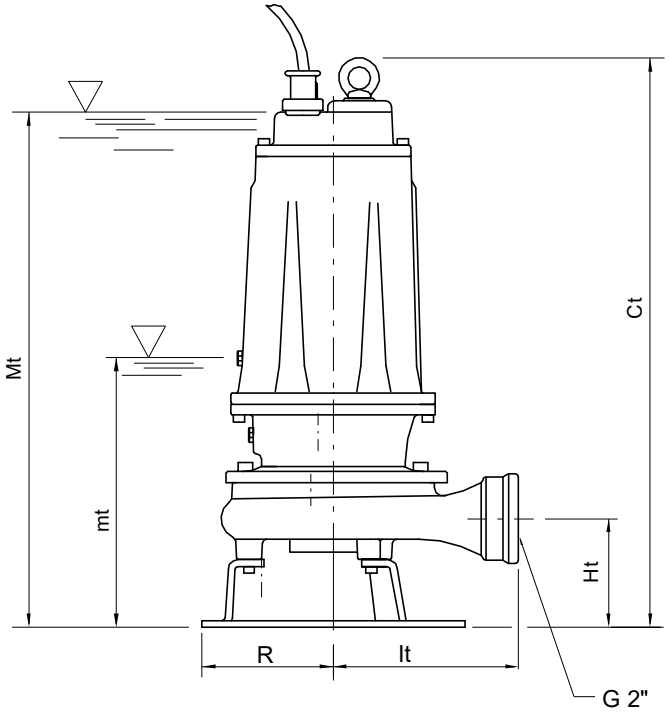

ACCESSORIES

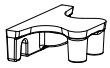

Quick coupling kit

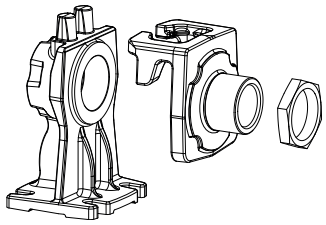

mt: minimum working level
Mt: minimum submengence level for continuos duty

TYPE		DIMENSIONS (mm)							Kg
1~	3~	Ct	Ht	R	It	mt	Mt	DNM	
FC 160	**FC 160T**	513	102	117	174	205	475	2"G	37
FC 210	**FC 210T**	513	102	117	174	205	475	2"G	37,5
-	**FC 310T**	513	102	117	174	205	475	2"G	37

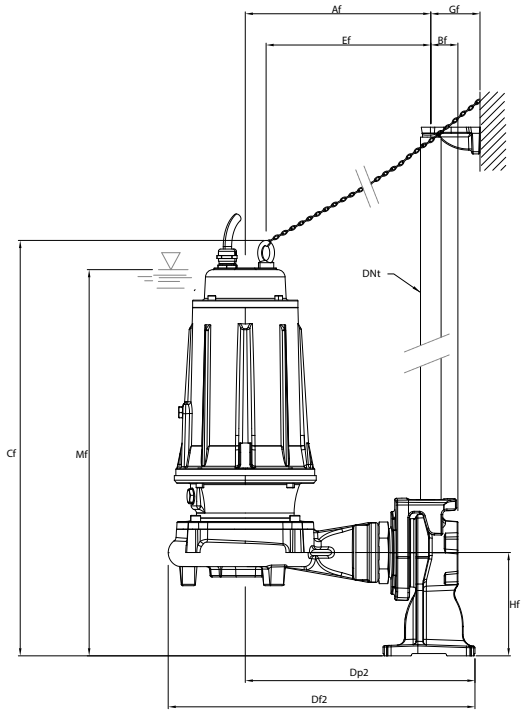

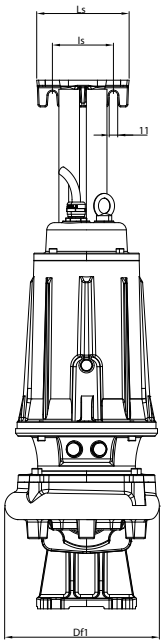

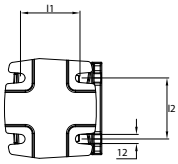

Mf: minimum submengence level for continuos duty

TYPE		DIMENSIONS (mm)													
1~	3~	Af	Bf	Cf	Df1	Df2	Dp2	Ef	Gf	Hf	I1	I2	Is	Ls	Mf
FC 160	**FC 160T**	243	36	545	203	402	301	216	65	135	78	80	80	121	506
FC 210	**FC 210T**	243	36	545	203	402	301	216	65	135	78	80	80	121	506
-	**FC 310T**	243	36	545	203	402	301	216	65	135	78	80	80	121	506

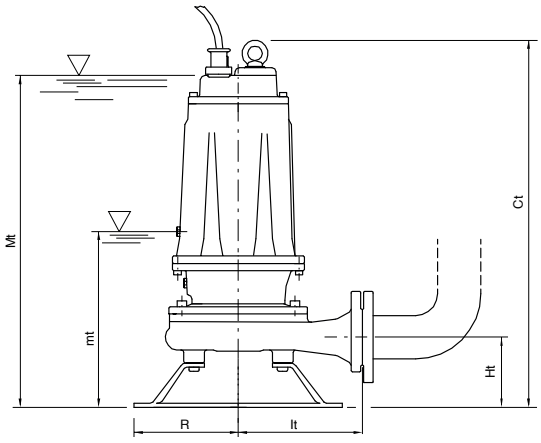

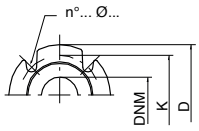

ACCESSORIES

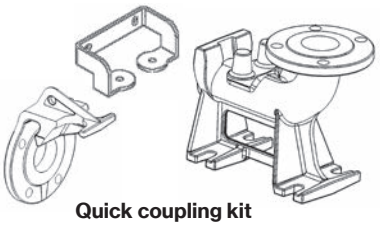

Quick coupling kit

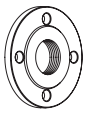

Counterflange

mt: minimum working level
Mt: minimum submengence level for continuos duty

TYPE	DIMENSIONS (mm)							Kg
3~	Ct	Ht	R	It	mt	Mt	DNM	
FC 410T	595	112	160	187	263	550	50	60,5
FC 560T	595	112	160	187	263	550	50	63,5
FC 750T	680	160	180	250	280	630	65	91
FC 1000T	680	160	180	250	280	630	65	93,5

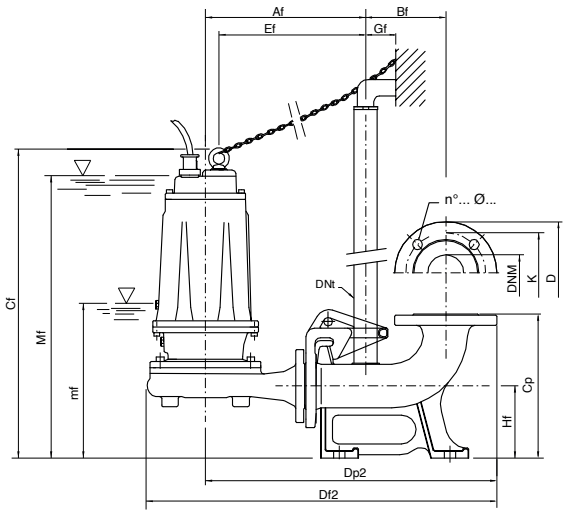

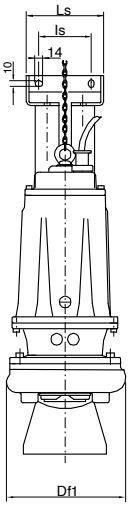

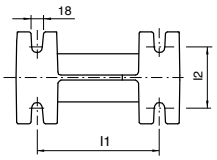

mf: minimum working level
Mf: minimum submengence level for continuos duty

Flange UNI PN 10 (mm)			
DNM	K	D	n°... ø...
50	125	165	4... 18...
65	145	185	4... 18...

TYPE	DIMENSIONS (mm)																	
3~	Af	Bf	Cf	Cp	Df1	Df2	Dp2	DNt	Ef	Gf	Hf	I1	I2	Is	Ls	mf	Mf	DNM
FC 410T/P	300	145	614	260	237	654	535	1" ¼	269	55	130	200	100	95	140	290	566	50
FC 560T/P	300	145	614	260	237	654	535	1" ¼	269	55	130	200	100	95	140	290	566	50
FC 750T/P	331	145	656	260	279	701	569	1" ¼	296	55	130	200	100	95	140	290	600	65
FC 1000T/P	331	145	656	260	279	701	569	1" ¼	296	55	130	200	100	95	140	290	600	65

DB

Drainage
Double-channel

Drainage pumps with “Double-Channel” impeller for pumping waste waters and liquids with suspended solids; ideal for civil and household applications. The single-phase version includes a built-in capacitor, a thermal protector and it can be equipped with a float switch.

Grey water

Black water

Construction features

Painting	cataphoresis
Pump body	cast iron
Shell, motor cover, base support	stainless steel
Impeller	stainless steel
Mechanical seal	double seal with oil barrier: silicon carbide on pump side, ceramic-graphite on motor side
Motor shaft	stainless steel AISI 430
Free passage	Ø max 50 mm
Max submergence	5 m
Liquid temperature	0 - 40 °C
Cable	H07 RN8F, 10 m
G	float switch

Motor

2 poles induction motor	3~ 3x380V - 60Hz 1~ 1x220V - 60Hz (with thermal protection)
Insulation class	F
Protection degree	IPX8

LOTS				
TYPE	TRUCK		CONTAINER	
	PALLET (cm)	N° pumps	PALLET (cm)	N° pumps
DB(T)	80×120×160	48	80×120×160	48

DB 100 G

- **T** 3~
- 1~ without float switch
- **G** 1~ with float switch

pump type

DB

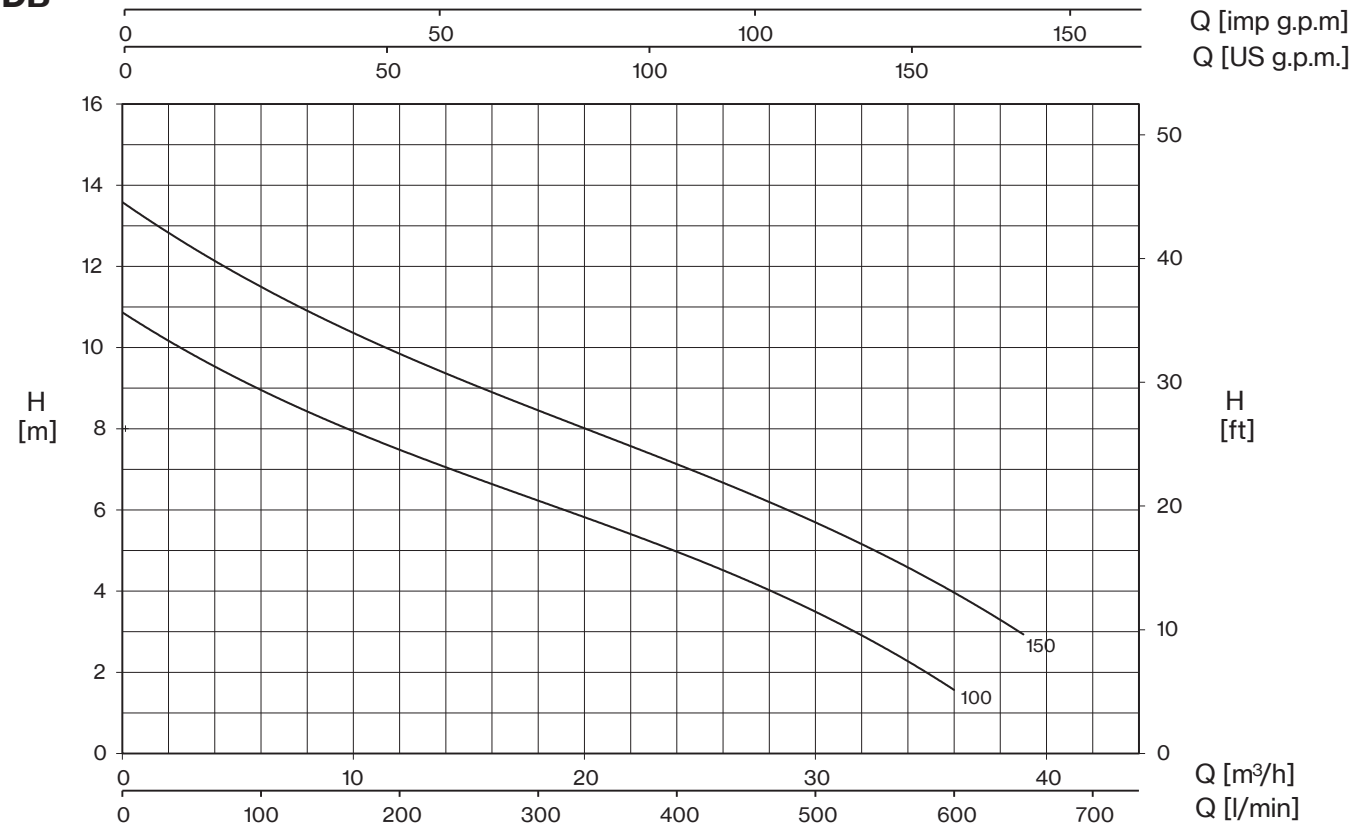

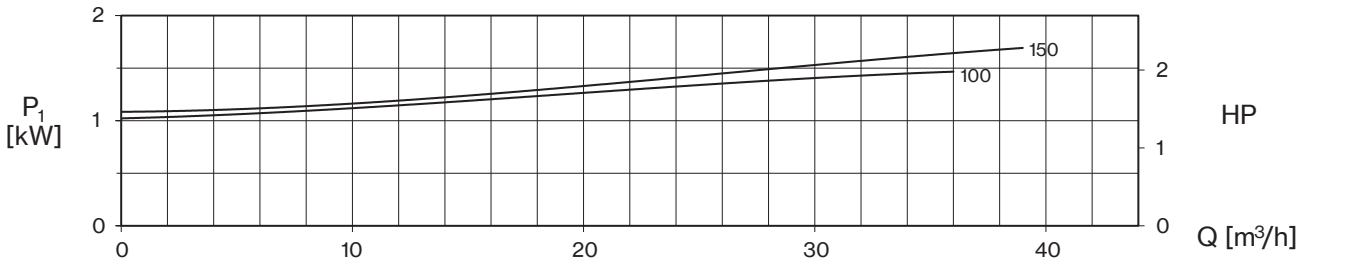

TYPE - 60 Hz		P1	CURRENT		Q (m³/h - l/min)							
1~	3~		1~ 220V	3~ 380V	0	6	12	18	24	30	36	39
					0	100	200	300	400	500	600	650
		kW	A		H (m)							
DB 100 (G)	**DB 100T**	1,44	6,9	3,1	10,9	9,0	7,4	6,2	5,2	3,3	1,6	
DB 150 (G)	**DB 150T**	1,72	8,7	3,3	13,6	11,4	9,8	8,6	7,2	5,6	3,9	3,0

E: maximum emptying level
Mt: minimum liquid level for continuos duty

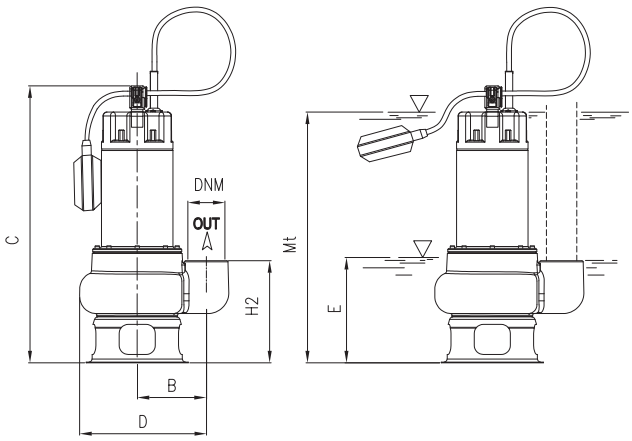

TYPE		DIMENSIONS (mm)										Kg
1~	3~	B	C	D	E	H2	Mt	DNM	I	L	M	
DB 100 (G)	**DB 100T**	115	469	210	160	170	417	2” G	200	260	470	17
DB 150 (G)	**DB 150T**	115	469	210	160	170	417	2” G	200	260	470	18,5

FM

Sewage
Single-channel

Single channel centrifugal drainage pumps. Specifically designed for heavy duty applications they guarantee high capacity at medium head; ideal for civil and industrial applications. Available in mobile or permanent version with coupling feet.

FM 160-560

Grey water

Black water

Construction features

Painting	cataphoresis
Pump body	cast iron
Impeller	cast iron
Mechanical seal	double seal with oil barrier: silicon carbide on pump side, ceramic-graphite on motor side
Motor shaft	stainless steel AISI 304
Free passage	Ø max 50 mm
Max submergence	20 m
Liquid temperature	0 - 40 °C
Cable	H07 RN8F, 10 m
Bolts	A2 stainless steel
Foot support	galvanized iron
Gaskets	NBR rubber

Motor

2 poles induction motor	3~ 220/380V - 60Hz 1~ 220V - 60Hz required run capacitor (35µF for 1,5HP model, 50µF for 2HP model)
Insulation class	F
Protection degree	IPX8

LOTS				
TYPE	TRUCK		CONTAINER	
	PALLET (cm)	N° pumps	PALLET (cm)	N° pumps
FM 160÷310(T)	85×110×145	18	85×110×190	27
FM 410T-560T	85×110×170	12	85×110×170	12

FM 560 T -CF

- -CF: counter-flange — not included / CF included
- T: motor — 1~ / T 3~
- FM 560: pump type

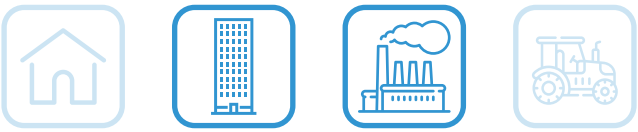

FM

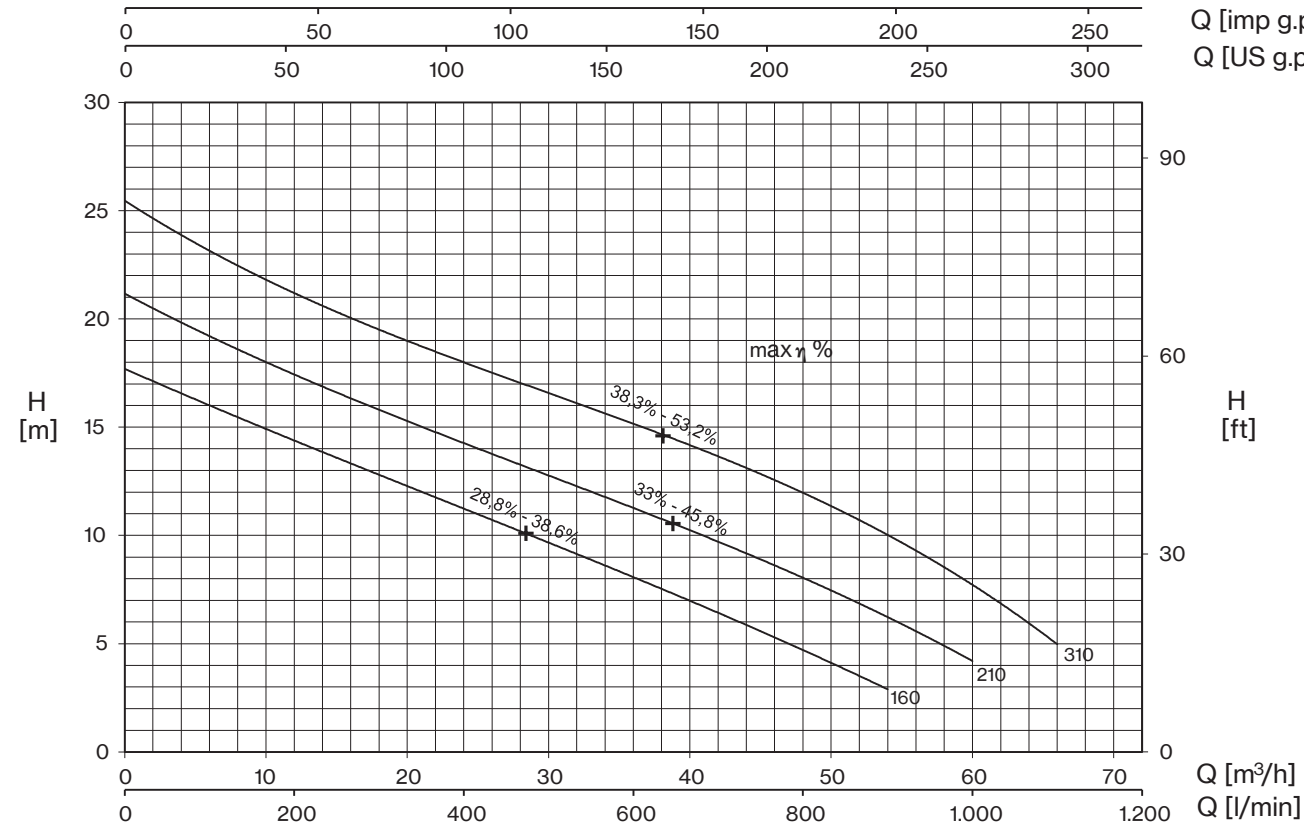

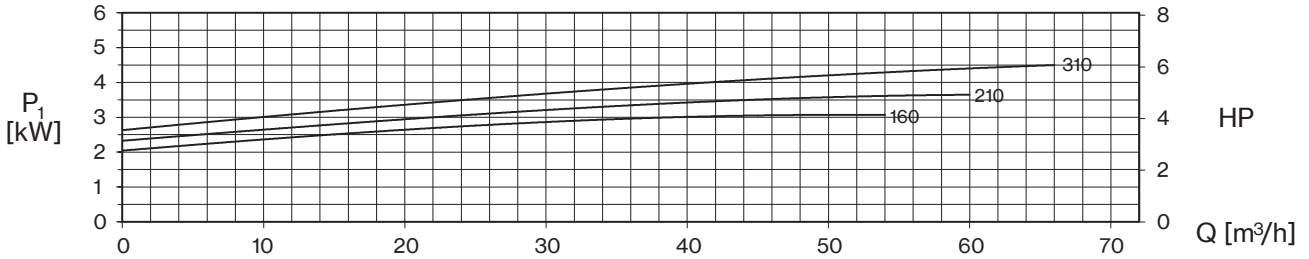

TYPE - 60 Hz		CURRENT			
1~	3~	220V	3~ 220V	3~ 380V (*)	220/380 V ⅄ / △
FM 160	**FM 160T**	15,8	9,5	5,5	-
FM 210	**FM 210T**	18,5	11,2	6,5	-
-	**FM 310T**	-	14	8,1	-

(*) no standard execution

+ max η %

max hydraulic efficiency and respective total efficiency

TYPE - 60 Hz		P2		P1		Q (m³/h - l/min)											
1~	3~			1~	3~	0	6	12	18	24	30	36	42	48	54	60	66
						0	100	200	300	400	500	600	700	800	900	1000	1100
		HP	kW	kW		H (m)											
FM 160	**FM 160T**	1,5	1,1	3,3	3,1	17,7	16	14,4	12,8	11,2	9,7	8,1	6,4	4,7	2,9		
FM 210	**FM 210T**	2	1,5	3,9	3,6	21,2	19,1	17,5	15,9	14,2	12,7	11,3	9,7	8,1	6,2	4,2	
-	**FM 310T**	3	2,2	-	4,6	25,3	23,2	21,4	19,7	18,0	16,4	14,9	13,5	12	10,2	8,2	4,6

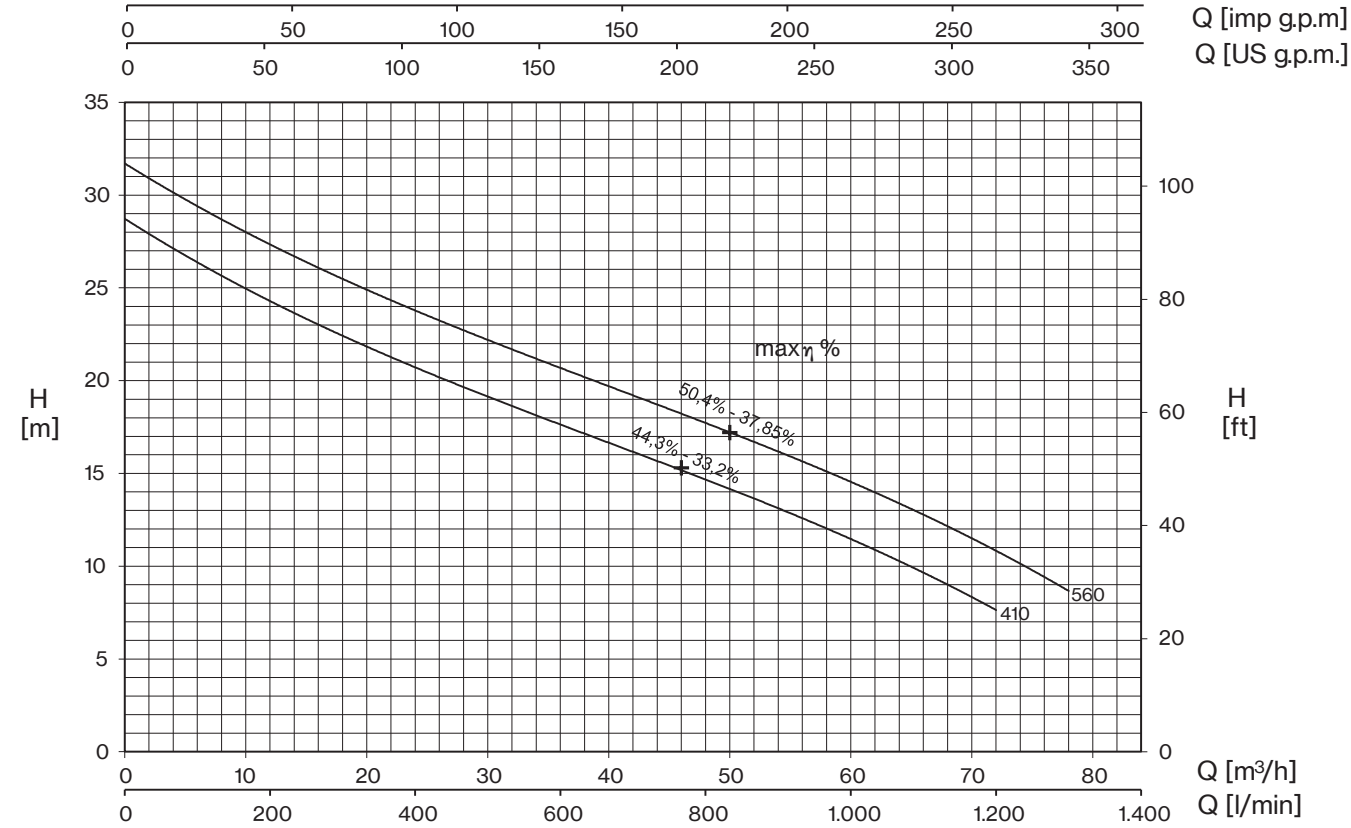

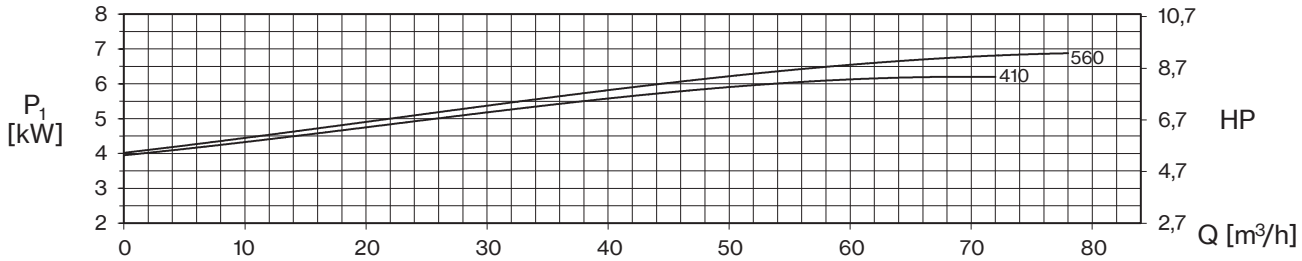

TYPE - 60 Hz	CURRENT		
3~	3~ 220V	3~ 380V (*)	220/380 V ⅄ / △ (*)
FM 410T	18,8	10,9	-
FM 560T	21,2	12,1	-

(*) no standard execution

+ max η %

max hydraulic efficiency and respective total efficiency

TYPE - 60 Hz	P2		P1	Q (m³/h - l/min)									
3~				0	6	18	30	42	54	60	66	72	78
				0	100	300	500	700	900	1000	1100	1200	1300
	HP	kW	kW	H (m)									
FM 410T	4	3	6,2	28,7	26,5	22,4	19,1	16,2	13,1	11,4	9,7	7,6	
FM 560T	5,5	4	6,9	31,5	29,7	25,5	22,1	19,1	16,2	14,6	12,8	10,9	8,6

FM

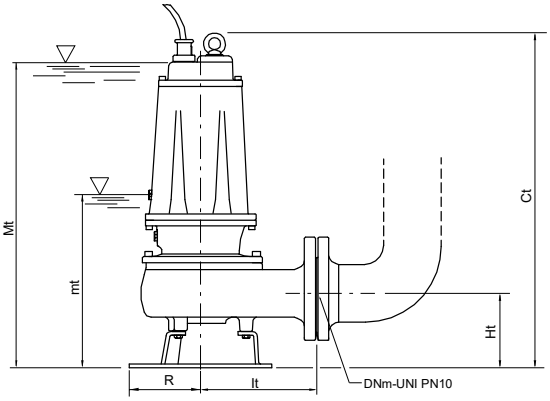

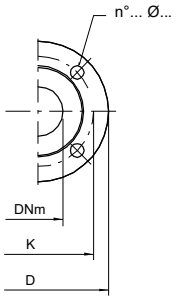

ACCESSORIES

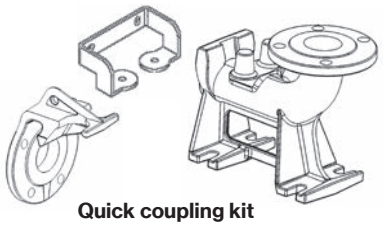

Quick coupling kit

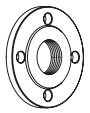

Counterflange

mt: minimum working level
Mt: minimum submengence level for continuos duty

TYPE		DIMENSIONS (mm)							Kg	
1~	3~	Ct	Ht	R	It	mt	Mt	DNM	1~	3~
FM 160	**FM 160T**	551	123	117	191	243	513	65	41,5	40
FM 210	**FM 210T**	551	123	117	191	243	513	65	42	41,5
-	**FM 310T**	551	123	117	191	243	513	65	-	42
-	**FM 410T**	645	148	160	210	285	600	80	-	68,5
-	**FM 560T**	645	148	160	210	285	600	80	-	71

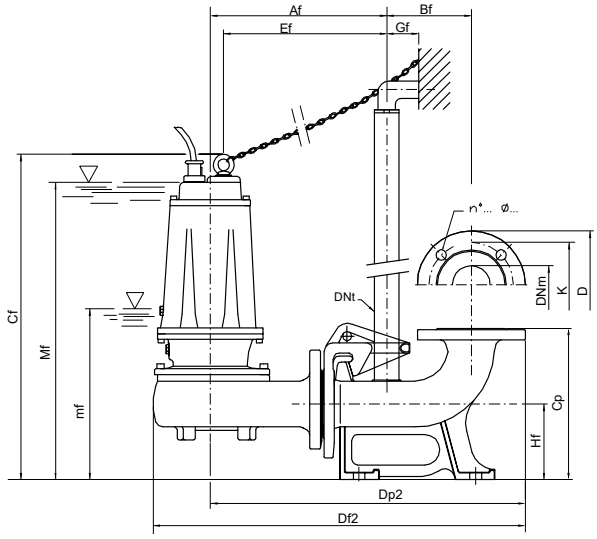

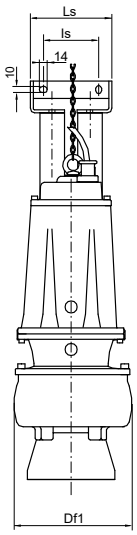

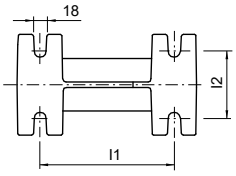

mf: minimum working level
Mf: minimum submengence level for continuos duty

TYPE		DIMENSIONS (mm)																	
1~	3~	Af	Bf	Cf	Cp	Df1	Df2	Dp2	DNt	Ef	Gf	Hf	I1	I2	Is	Ls	mf	Mf	DNM
FM 160/P	**FM 160T/P**	303	145	560	260	200	639	542	1” ¼	280	55	130	200	100	95	140	251	521	65
FM 210/P	**FM 210T/P**	303	145	560	260	200	639	542	1” ¼	280	55	130	200	100	95	140	251	521	65
-	**FM 310T/P**	303	145	560	260	200	639	542	1” ¼	280	55	130	200	100	95	140	251	521	65
-	**FM 410T/P**	350	165	690	340	220	722	615	2”	319	85	190	250	140	130	180	327	642	80
-	**FM 560T/P**	350	165	690	340	220	722	615	2”	319	85	190	250	140	130	180	327	642	80

Flange UNI PN 10 (mm)			
DNM	K	D	n°... ø...
65	145	185	4... 18...
80	160	200	8... 18...

FTR 101

Sewage
Grinder

Drainage pumps with open impeller characterized by head in ratio to the type and size of the machine. The grinder allows to pumps sewage containing textile or filamentous fibres have to be crushed. The single-phase version includes a built-in capacitor, a thermal protector and it can be equipped with a float switch.

Grey water

Black water

Construction features

Painting	cataphoresis
Pump body	cast iron
Shell, motor cover	stainless steel
Impeller	brass
Mechanical seal	double seal with oil barrier; silicon carbide on pump side, sealing ring on motor side
Motor shaft	stainless steel AISI 430
Grinder	treated stainless steel
Max submergence	5 m
Liquid temperature	0 - 40 °C
Cable	H07 RNF, 10 m
G	float switch

Motor

2 poles induction motor	3~ 380V - 60Hz 1~ 220V - 60Hz (with thermal protection)
Insulation class	F
Protection degree	IPX8

LOTS				
TYPE	TRUCK		CONTAINER	
	PALLET (cm)	N° pumps	PALLET (cm)	N° pumps
FTR 101(T)	80×120×150	57	80×120×195	76
			80×110×195	72

FTR 101 G

- **T** 3~
- 1~ without float switch
- **G** 1~ with float switch

pump type

FTR 101

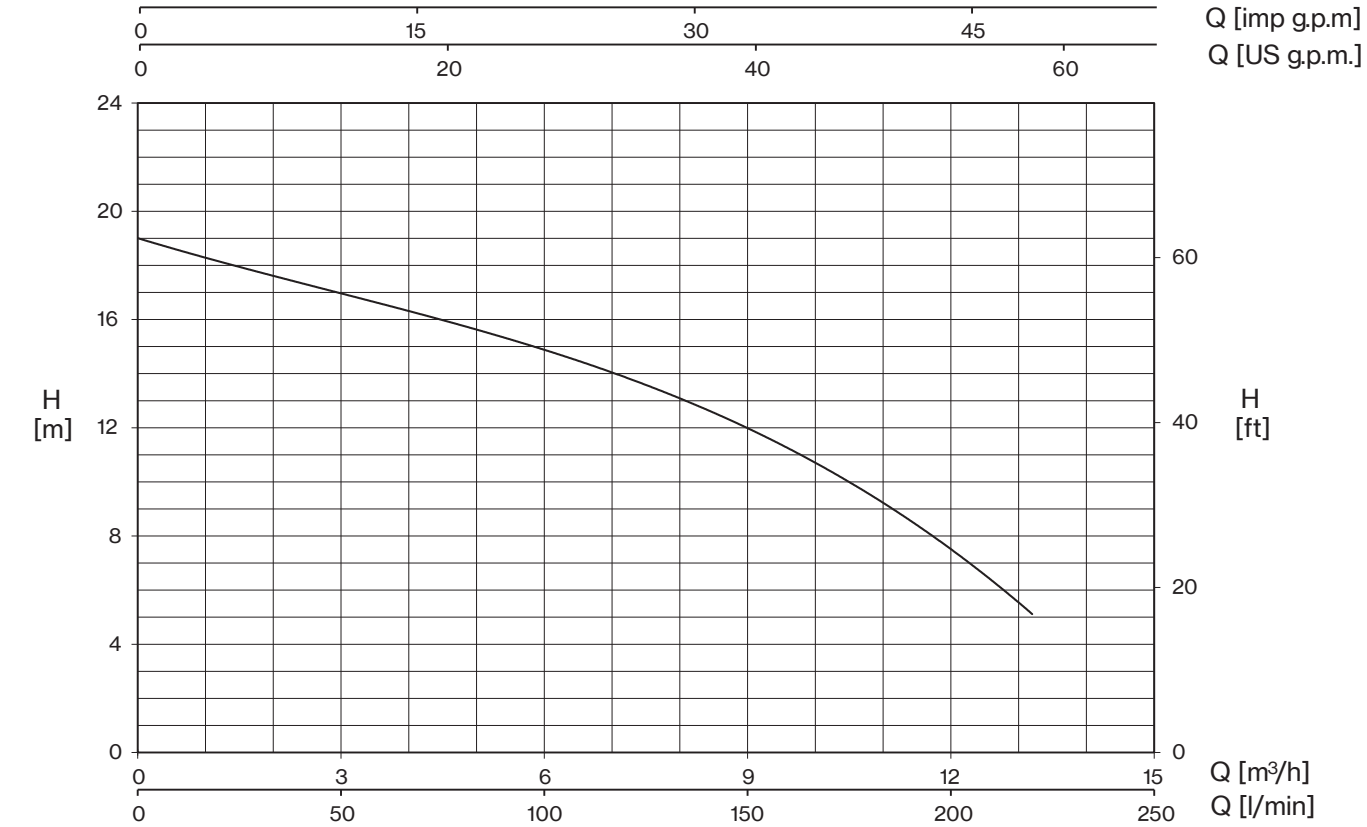

TYPE - 60 Hz		P1	CURRENT		Q (m³/h - l/min)					
1~	3~		1~ 220V	3~ 380V	0	3	6	9	12	13,2
					0	50	100	150	200	220
		kW	A		H (m)					
FTR 101 (G)	**FTR 101**	1,3	6,0	2,4	19,0	17,1	14,8	11,9	7,8	4,9

E: maximum emptying level
Mt: minimum liquid level for continuos duty

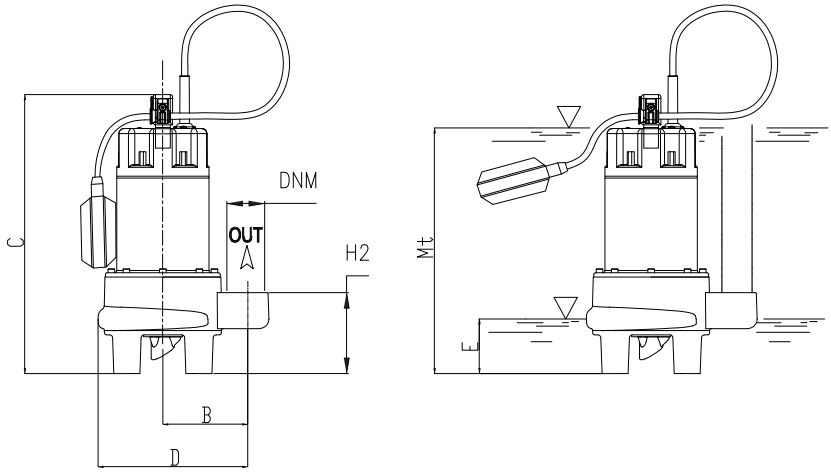

TYPE		DIMENSIONS (mm)										Kg
1~	3~	B	C	D	E	H2	Mt	DNM	I	L	M	
FTR 101 (G)	**FTR 101**	105	369	288	84	104,5	316	1" ½ G	260	185	450	16,5

FTR/FTRT

Sewage
Grinder

FTR 150-300 | FTR 400-1000 T | FTR 400-1000 T/P

Drainage and waste water pumps equipped with open impeller and grinder system able to shred sewage with suspended solids and prevent the pump from clogging. Best for emptying of septic tanks and residential sumps as well as for rain water systems and for draining of flooded areas where seamless operation is required. The quick coupling feet DN50 and DN65 is available for flanged pumps.

Grey water

Black water

Construction features

Painting	cataphoresis
Pump body	cast iron
Shell, motor cover	cast iron
Impeller	cast iron
Mechanical seal	double seal with oil barrier: silicon carbide on pump side, sealing ring on motor side.
Motor shaft	stainless steel AISI 304
Max submergence	20 m
Liquid temperature	0-40 °C
Grinder	treated stainless steel
Bolts	A2 stainless steel
Foot support	galvanized iron
Gaskets	NBR rubber

Motor

2 poles induction motor	3~ 220V - 60Hz 3~ 380V - 60Hz 3~ 220/380V - 60Hz 1~ 220V - 60Hz (required run capacitor (35µF for 1,5HP model, 50µF for 2HP model)
Insulation class	F
Protection degree	IPX8

LOTS				
TYPE	TRUCK		CONTAINER	
	PALLET (cm)	N° pumps	PALLET (cm)	N° pumps
FTR 150÷300T	85×110×145	18	85×110×190	27
FTR 400-550T	85×110×170	12	85×110×170	12
FTR 750-1000T	100×120×190	12	100×120×190	12

FTR 150 [ ] -CF

- -CF: counter-flange — [ ] not included, CF included
- [ ]: motor — [ ] 1~, T 3~
- FTR 150: pump type

FTR/FTRT

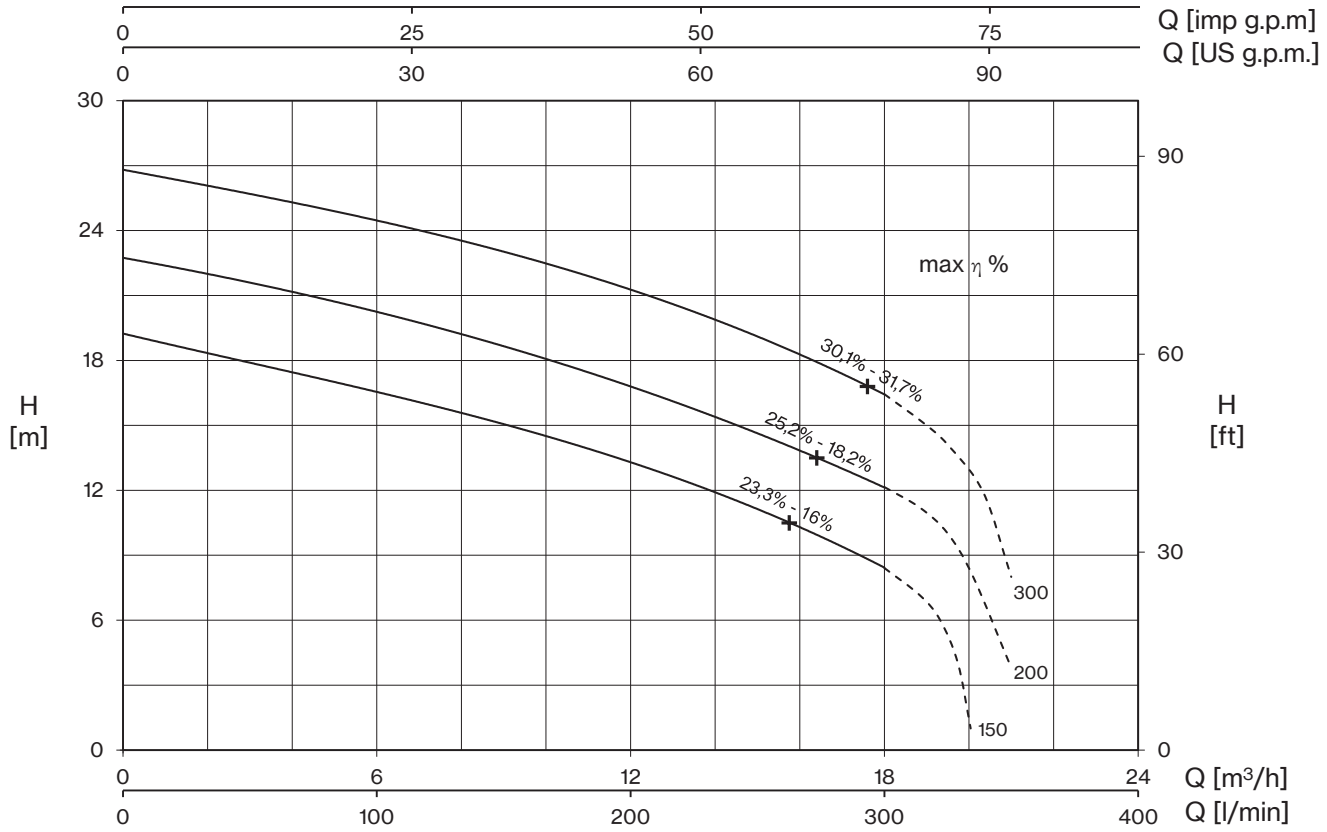

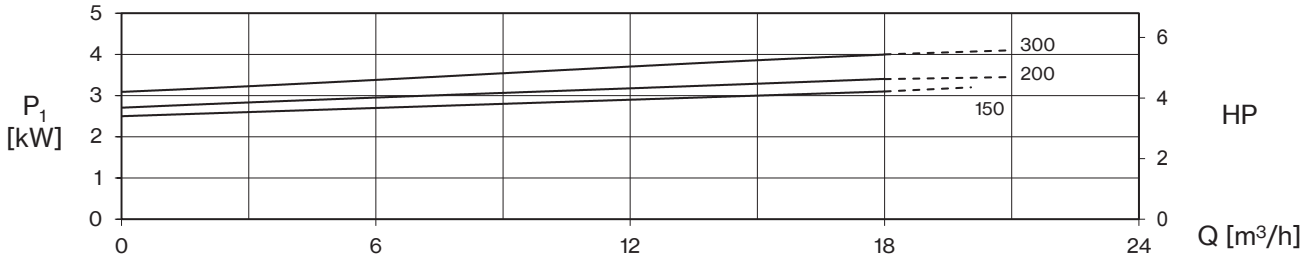

TYPE - 60 Hz		CURRENT			
1~	3~	220V	3~ 220V	3~ 380V (*)	220/380 V ⅄ / △
FTR 150	**FTR 150T**	16,2	9,4	5,4	-
FTR 200	**FTR 200T**	17,5	10,2	5,9	-
-	**FTR 300T**	-	12,6	7,3	-

(*) no standard execution

+ max η %

max hydraulic efficiency and respective total efficiency

TYPE - 60 Hz		P2		P1		Q (m³/h - l/min)							
1~	3~			1~	3~	0	3	6	9	12	13,2	15	18
						0	50	100	150	200	220	250	300
		HP	kW	kW		H (m)							
FTR 150	**FTR 150**	1,5	1,1	3,4	3,1	19,2	18,0	16,5	15,0	13,3	12,5	11,2	8,4
FTR 200	**FTR 200**	2	1,5	3,7	3,4	22,7	21,7	20,2	18,6	16,8	16,0	14,7	12,1
-	**FTR 300**	3	2,2	-	4,0	26,8	25,7	24,5	23,0	21,2	20,5	19,2	16,4

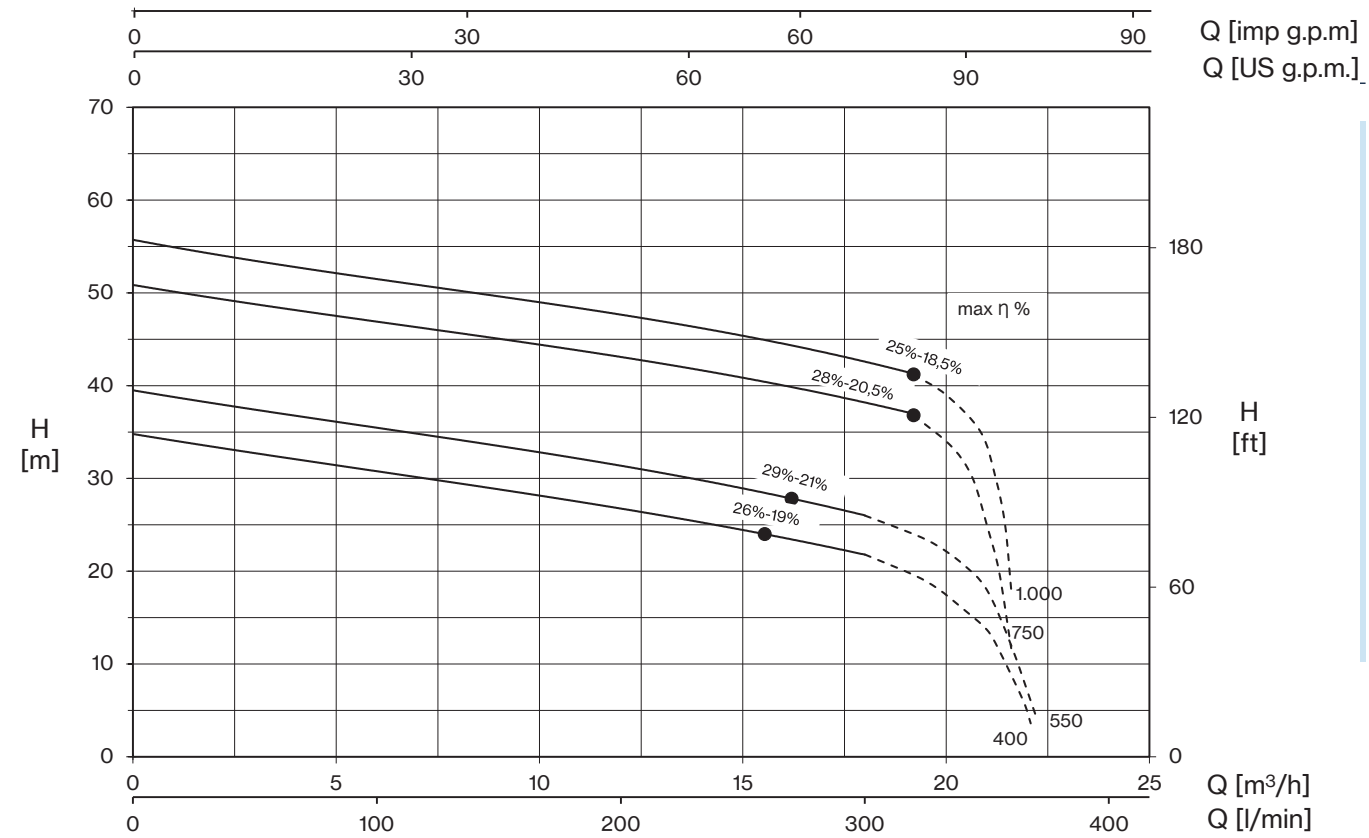

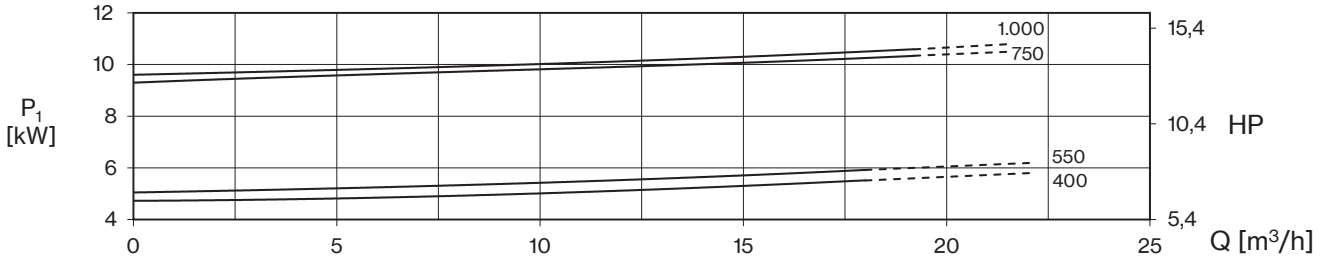

TYPE - 60 Hz	CURRENT		
3~	3~ 220V	3~ 380V (*)	220/380 V ⅄ / △
FTR 400T	15,9	9,2	-
FTR 550T	18,2	10,5	-
FTR 750T	-	18,8	32,5
FTR 1000T	-	19,0	32,9

(*) no standard execution

+ max η %

max hydraulic efficiency and respective total efficiency

TYPE - 60 Hz	P2		P1	Q (m³/h - l/min)						
3~				0	3	6	9	12	15	18
				0	50	100	150	200	250	300
	HP	kW	kW	H (m)						
FTR 400T	4	3	5,1	34,8	32,7	30,8	28,8	26,8	24,4	21,8
FTR 550T	5,5	4	5,9	39,5	37,4	35,5	33,5	31,3	29,0	26,0

TYPE - 60 Hz	P2		P1	Q (m³/h - l/min)							
3~				0	3	6	9	12	15	18	19,2
				0	50	100	150	200	250	300	320
	HP	kW	kW								
FTR 750T	7,5	5,5	10,3	50,8	48,9	46,9	45,0	43,0	40,9	38,4	36,8
FTR 1000T	10	7,5	10,6	55,7	53,5	51,5	49,6	47,6	45,4	42,7	41,2

FTR/FTRT

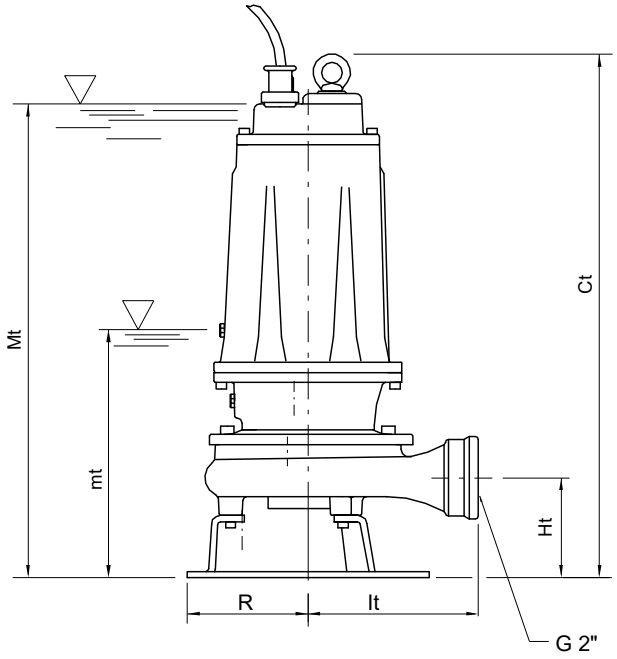

ACCESSORIES

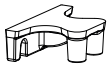

Quick coupling kit

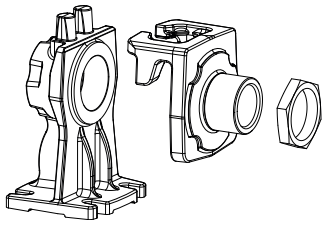

mt: minimum working level

Mt: minimum submengence level for continuos duty

TYPE		DIMENSIONS (mm)							Kg
1~	3~	Ct	Ht	R	It	mt	Mt	DNM	
FTR 150	**FTR 150T**	513	102	117	174	205	475	2”G	38
FTR 200	**FTR 200T**	513	102	117	174	205	475	2”G	38,5
-	**FTR 300T**	513	102	117	174	205	475	2”G	38

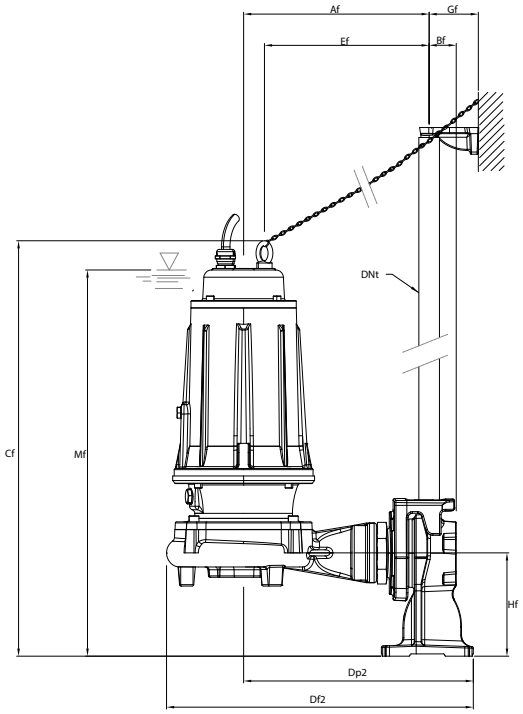

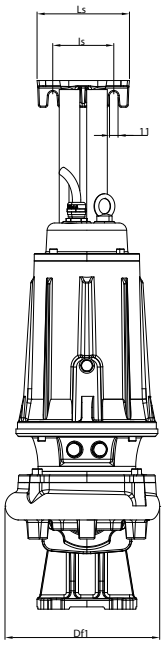

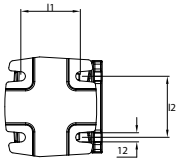

Mf: minimum submengence level for continuos duty

TYPE		DIMENSIONS (mm)													
1~	3~	Af	Bf	Cf	Df1	Df2	Dp2	Ef	Gf	Hf	l1	l2	Is	Ls	Mf
FTR 150	**FTR 150T**	243	36	545	203	402	301	216	65	135	78	80	80	121	506
FTR 200	**FTR 200T**	243	36	545	203	402	301	216	65	135	78	80	80	121	506
-	**FTR 300T**	243	36	545	203	402	301	216	65	135	78	80	80	121	506

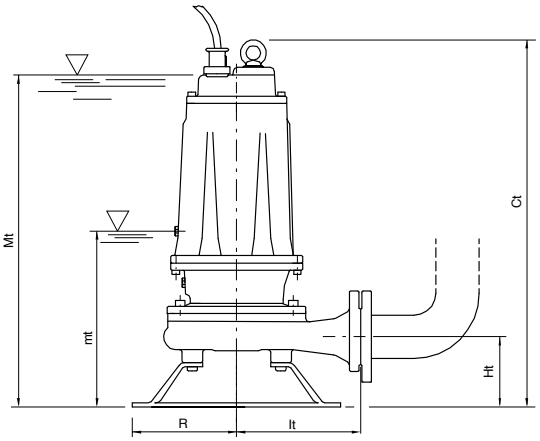

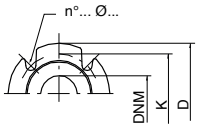

ACCESSORIES

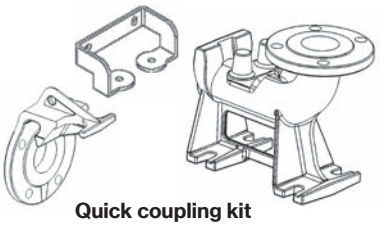

Quick coupling kit

Counterflange

mt: minimum working level
Mt: minimum submengence level for continuos duty

TYPE	DIMENSIONS (mm)							Kg
3~	Ct	Ht	R	It	mt	Mt	DNM	
FTR 400T	595	112	160	190	265	550	50	62,5
FTR 550T	595	112	160	190	265	550	50	65,5
FTR 750T	680	160	180	250	280	630	65	91,5
FTR 1000T	680	160	180	250	280	630	65	94,5

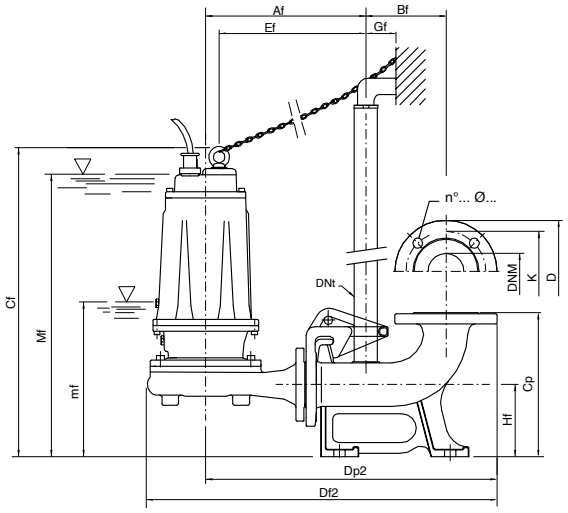

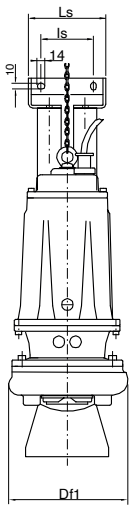

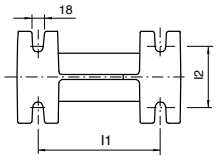

mf: minimum working level
Mf: minimum submengence level for continuos duty

Flange UNI PN 10 (mm)			
DNM	K	D	n°... ø...
50	125	165	4... 18...
65	145	185	4... 18...

TYPE	DIMENSIONS (mm)																	
3~	Af	Bf	Cf	Cp	Df1	Df2	Dp2	DNt	Ef	Gf	Hf	l1	l2	Is	Ls	mf	Mf	DNM
FTR 400T/P	300	145	614	260	237	654	538	1” 1¼	269	55	130	200	100	95	140	290	566	50
FTR 550T/P	300	145	614	260	237	654	538	1” ¼	269	55	130	200	100	95	140	290	566	50
FTR 750T/P	331	145	656	260	279	710	569	1” ¼	297	55	130	200	100	95	140	290	600	65
FTR 1000T/P	331	145	656	260	279	710	569	1” ¼	297	55	130	250	100	95	140	290	600	65

DC

DC 80-102

DC 150

Drainage pumps with set-back Vortex type impeller for pumping sewage waters and liquids with suspended solids; ideal for civil and household applications. The single-phase version includes a built-in capacitor, a thermal protector and it can be equipped with a float switch.

DC 80-102

DC 150

Grey water

Black water

Construction features

Painting	cataphoresis
Pump body	cast iron
Shell, motor cover, base support	stainless steel
Impeller	Vortex stainless steel (80÷102); brass (150)
Mechanical seal	double seal with oil barrier: pump side with silicon carbide mechanical seal; motor side with sealing ring (80÷102) or ceramic-graphite mechanical seal (150)
Motor shaft	stainless steel AISI 430
Free passage	Ø max 35 mm (80-100) Ø max 50 mm (82÷150)
Max submergence	5 m
Liquid temperature	0 - 40 °C
Cable	H07 RN8F, 10 m
G	float switch

Motor

2 poles induction motor	3~ 380V - 60Hz 1~ 220V - 60Hz (with thermal protection)
Insulation class	F
Protection degree	IPX8

LOTS				
TYPE	TRUCK		CONTAINER	
	PALLET (cm)	N° pumps	PALLET (cm)	N° pumps
DC 80÷102(T)	80×120×150	57	80×110×195	72
			80×120×195	76
DC 82(T)	80×120×160	48	80×120×200	64
DC 150(T)	80×120×160	51	80×120×200	64

DC 80 G

- **T** 3~
- 1~ without float switch
- **G** 1~ with float switch

delivery port size
- standard
- **/2** larger

pump type

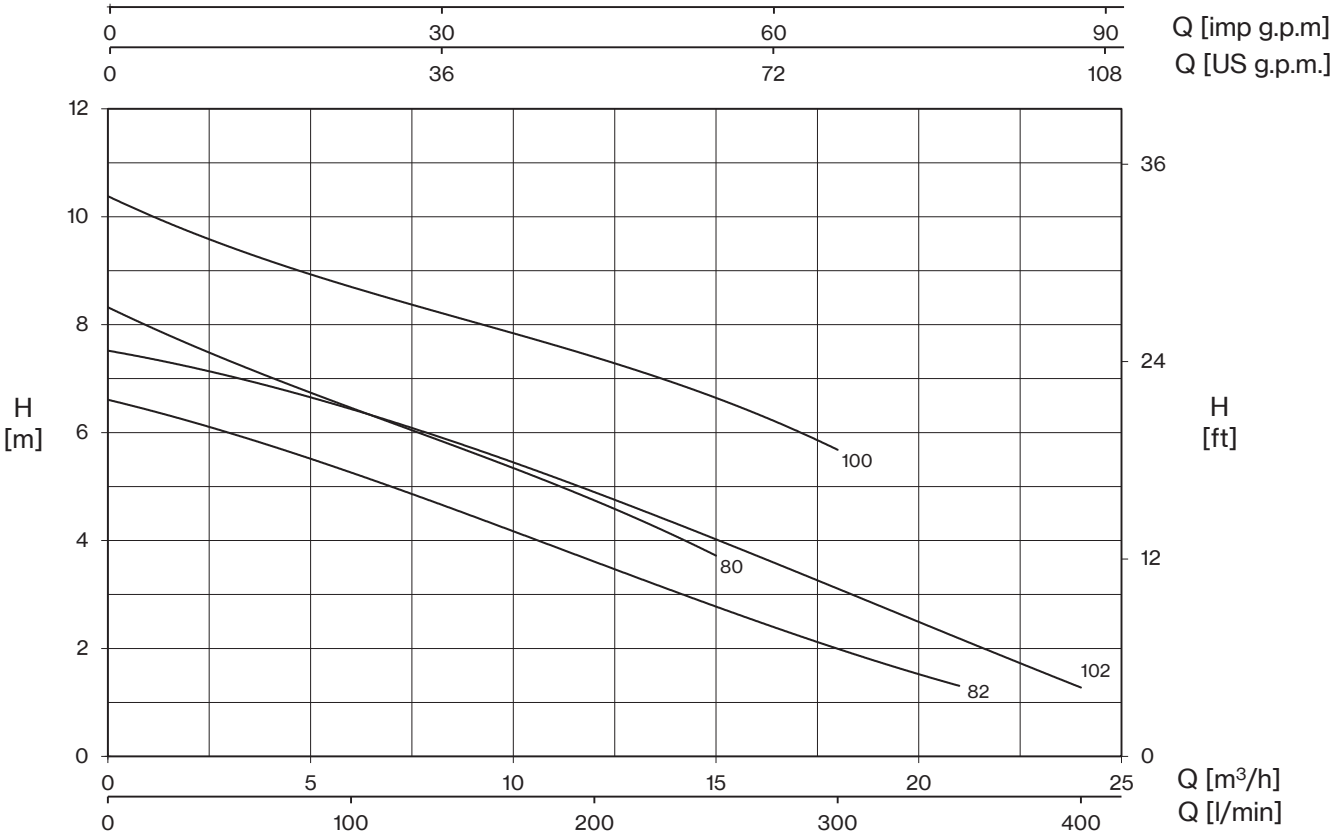

TYPE - 60 Hz		P1	CURRENT		Q (m³/h - l/min)								
1~	3~		1~ 220V	3~ 380V	0	3	6	9	12	15	18	21	24
					0	50	100	150	200	250	300	350	400
		kW	A		H (m)								
DC 80 (G)	**DC 80T**	1,05	4,7	2,2	8,3	7,4	6,4	5,6	4,8	3,7			
DC 80/2 (G)	**DC 80/2T**	1,05	4,7	2,2	8,3	7,4	6,4	5,6	4,8	3,7			
DC 100 (G)	**DC 100T**	1,35	6,2	2,8	10,4	9,4	8,7	8,1	7,4	6,6	5,7		
DC 100/2 (G)	**DC 100/2T**	1,35	6,2	2,8	10,4	9,4	8,7	8,1	7,4	6,6	5,7		
DC 82 (G)	**DC 82T**	1	4,5	2,1	6,6	6	5,3	4,4	3,6	2,8	2	1,3	
DC 102 (G)	**DC 102T**	1,2	5,3	2,4	7,5	7,1	6,4	5,7	4,9	4	3,2	2,1	1,3

E: maximum emptying level
Mt: minimum liquid level for continuos duty

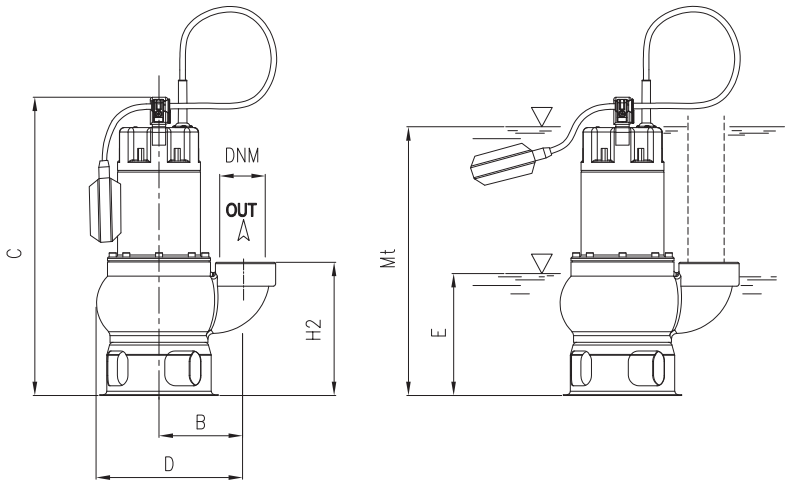

TYPE		DIMENSIONS (mm)										Kg
1~	3~	B	C	D	E	H2	Mt	DNM	I	L	M	
DC 80 (G)	**DC 80T**	115	421	199	155	174	370	1"½ G	250	183	448	13,5
DC 80/2 (G)	**DC 80/2T**	115	421	199	155	174	370	2" G	250	183	448	14
DC 100 (G)	**DC 100T**	115	421	199	155	174	370	1"½ G	250	183	448	15,5
DC 100/2 (G)	**DC 100/2T**	115	421	199	155	174	370	2" G	250	183	448	15,5
DC 82 (G)	**DC 82T**	120	437	210	171	190	386	2" G	264	203	482	15
DC 102 (G)	**DC 102T**	120	437	210	171	190	386	2" G	264	203	482	16

DC

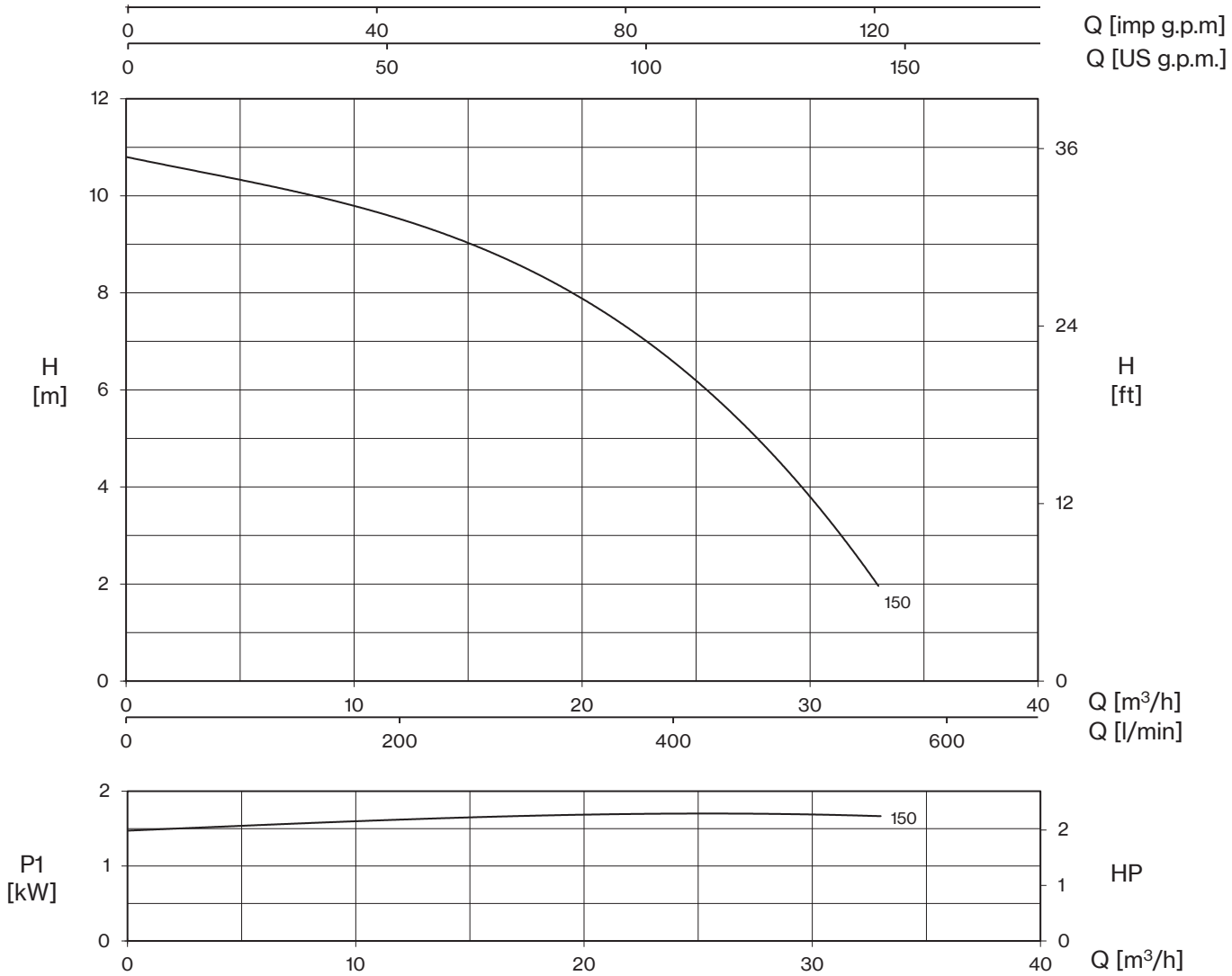

TYPE - 60 Hz		P1	CURRENT		Q (m³/h - l/min)						
1~	3~		1~ 220V	3~ 380V	0	6	12	18	24	30	33
					0	100	200	300	400	500	550
		kW	A		H (m)						
DC 150 (G)	**DC 150T**	1,6	8,7	3,2	10,8	10,3	9,5	8,4	6,7	3,7	2,0

E: maximum emptying level
Mt: minimum liquid level for continuos duty

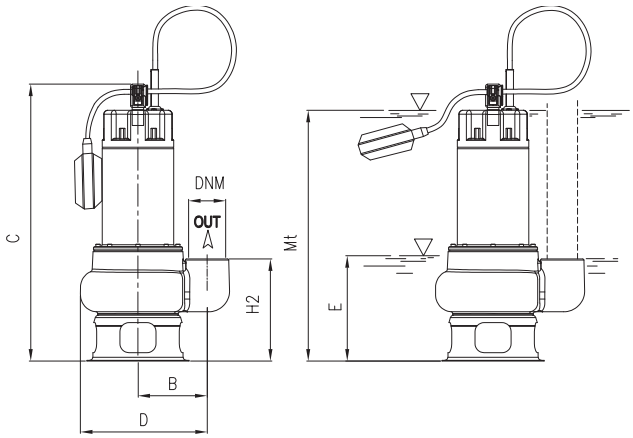

TYPE	DIMENSIONS (mm)										Kg
	B	C	D	E	H2	Mt	DNM	I	L	M	
DC 150 (G)	115	469	210	160	170	417	2” G	200	260	470	19

DS

Drainage
Vortex

Drainage pumps with set-back Vortex type impeller for pumping charged waters and liquids with suspended solids; ideal for civil and household applications. The single-phase version includes a built-in capacitor, a thermal protector and it can be equipped with a float switch.

Grey water

Black water

Construction features

Pump body	stainless steel with openings 1"½ and 2"
Shell, motor cover, base support	stainless steel
Impeller	stainless steel set-back Vortex
Mechanical seal	double seal with oil barrier: silicon carbide on pump side, sealing ring on motor side
Motor shaft	stainless steel AISI 430
Free passage	Ø max 28 mm
Max submergence	5 m
Liquid temperature	0 - 40 °C
Cable	H07 RN8F, 10 m
G	float switch

Motor

2 poles induction motor	3~ 380V - 60Hz 1~ 220V - 60Hz (with thermal protection)
Insulation class	F
Protection degree	IPX8

LOTS				
TYPE	TRUCK		CONTAINER	
	PALLET (cm)	N° pumps	PALLET (cm)	N° pumps
DS(T)	80×120×150	57	85×120×190	76
			85×110×190	72

DS 80 G

- **T** 3~
- 1~ without float switch
- **G** 1~ with float switch

delivery port size
- standard
- **/2** larger

pump type

DS

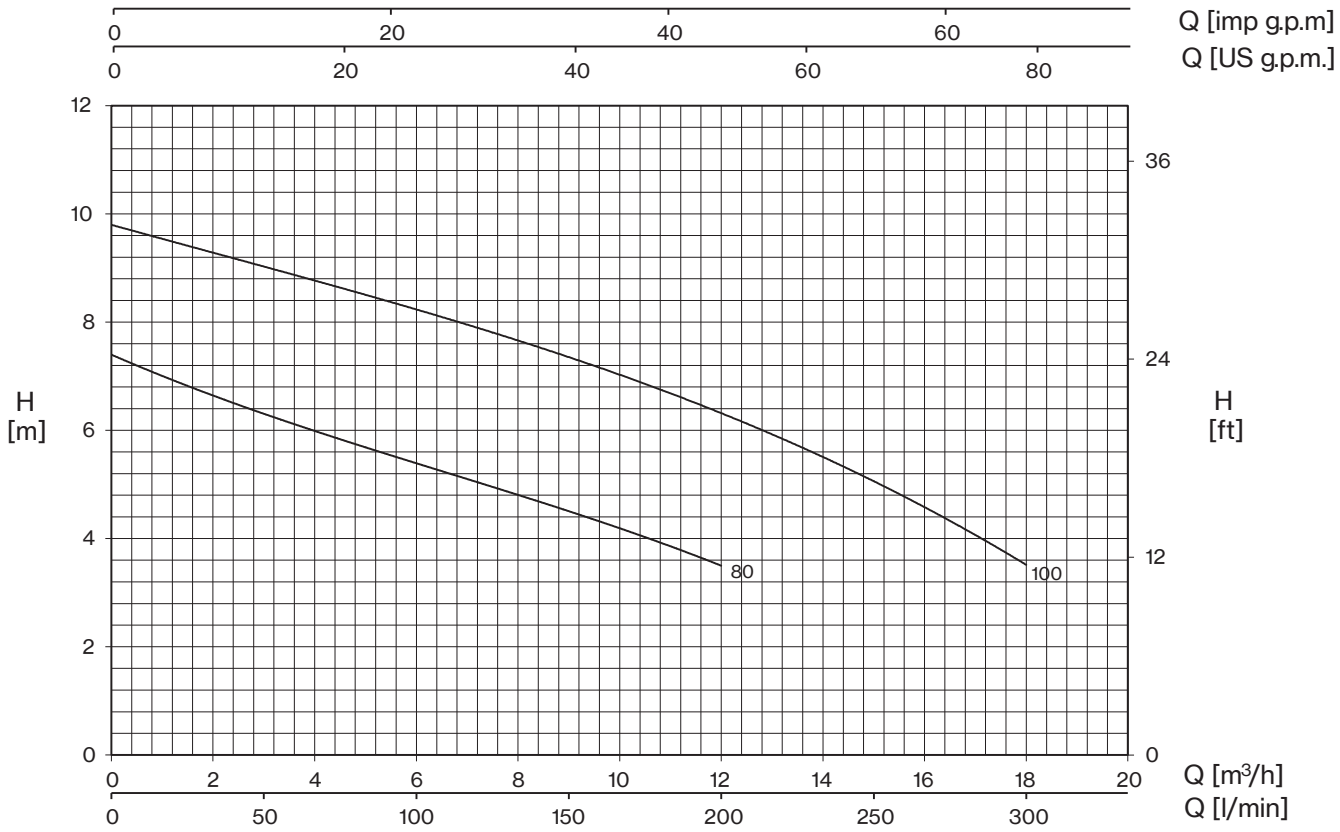

TYPE - 60 Hz		P1	CURRENT		Q (m³/h - l/min)						
1~	3~		1~ 220V	3~ 380V	0	3	6	9	12	15	18
					0	50	100	150	200	250	300
		kW	A		H (m)						
DS 80 (G)	**DS 80T**	1,05	4,7	2,2	7,4	6,3	5,4	4,5	3,5		
DS 80/2 (G)	**DS 80/2T**	1,05	4,7	2,2	7,4	6,3	5,4	4,5	3,5		
DS 100 (G)	**DS 100T**	1,35	6,2	2,8	9,8	9	8,3	7,3	6,3	5,1	3,5
DS 100/2 (G)	**DS 100/2T**	1,35	6,2	2,8	9,8	9	8,3	7,3	6,3	5,1	3,5

E: maximum emptying level
Mt: minimum liquid level for continuos duty

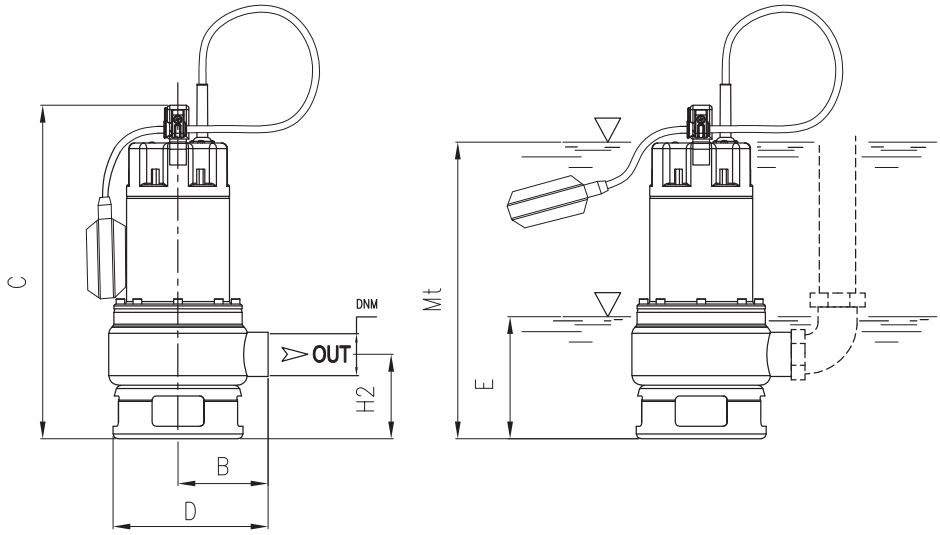

TYPE		DIMENSIONS (mm)										Kg
1~	3~	B	C	D	E	H2	Mt	DNM	I	L	M	
DS 80 (G)	**DS 80T**	104	409,5	189	125	112	280	1" ½ G	250	183	448	10,5
DS 80/2 (G)	**DS 80/2T**	108	409,5	193	125	112	280	2" G	250	183	448	10,5
DS 100 (G)	**DS 100T**	104	409,5	189	125	112	280	1" ½ G	250	183	448	12
DS 100/2 (G)	**DS 100/2T**	108	409,5	193	125	112	280	2" G	250	183	448	12

FV

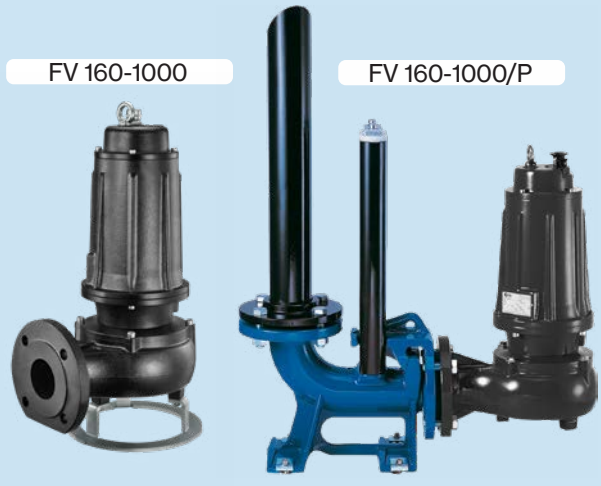

Drainage pumps for charged liquids with set-back Vortex type impeller for civil and industrial applications; specifically designed for very heavy use; available in the mobile or permanent versions with coupling feet.

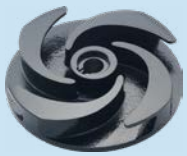

Grey water

Black water

Construction features

Painting	cataphoresis
Pump body	cast iron
Impeller	cast iron
Mechanical seal	double seal with oil barrier: silicon carbide on pump side, ceramic-graphite on motor side
Motor shaft	stainless steel AISI 304
Free passage	Ø max 50 mm (160÷310; 750-1000) Ø max 45 mm (400-550)
Max submergence	20 m
Liquid temperature	0 - 40 °C
Cable	H07 RN8F, 10 m
Bolts	A2 stainless steel
Foot support	galvanized iron
Gaskets	NBR rubber

Motor

2 poles induction motor	3~ 220/380V - 60Hz 1~ 220V - 60Hz required run capacitor (35μF for 1,5HP model, 50μF for 2HP model)
Insulation class	F
Protection degree	IPX8

LOTS				
TYPE	TRUCK		CONTAINER	
	PALLET (cm)	N° pumps	PALLET (cm)	N° pumps
FV 160÷310(T)	85×110×145	18	85×110×190	27
FV 400T-550T	85×110×170	12	85×110×170	12
FV 750T-1000T	100×120×190	12	100×120×190	12

FV 160 T -CF

- -CF: counter-flange — not included / CF included
- T: motor — 1~ / T 3~
- FV 160: pump type

FV

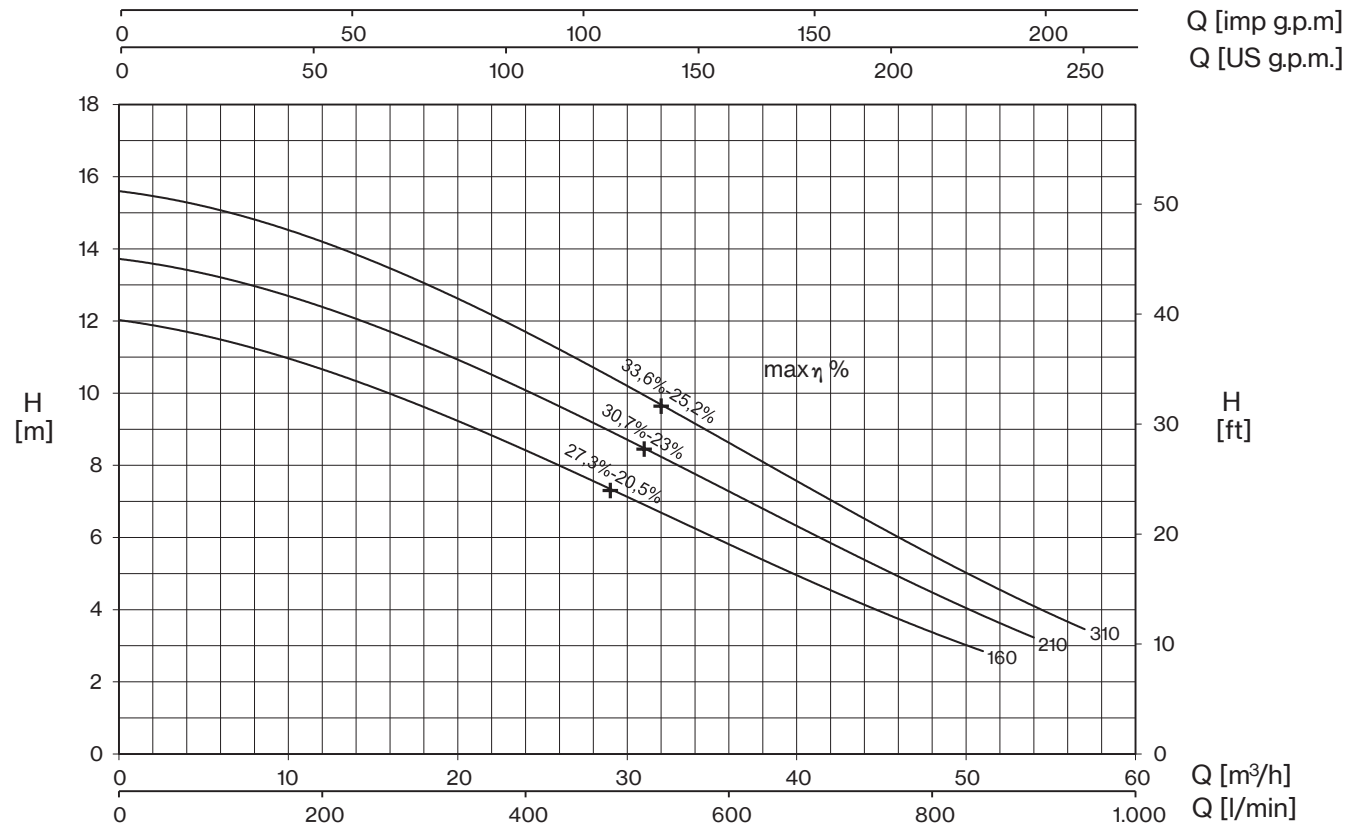

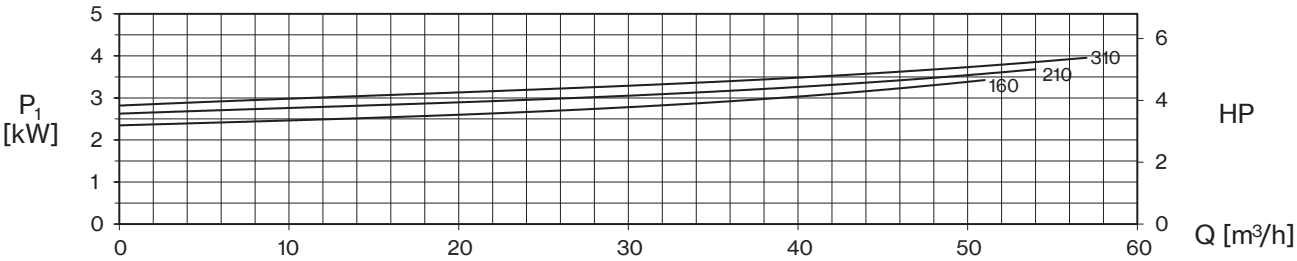

TYPE - 60 Hz		CURRENT			
1~	3~	220V	3~ 220V	3~ 380V (*)	220/380 V ⅄ / △
FV 160	**FV 160T**	15,7	9,1	5,3	-
FV 210	**FV 210T**	17,2	11,0	6,4	-
-	**FV 310T**	-	12,3	7,1	-

(*) no standard execution

+ max η %

max hydraulic efficiency and respective total efficiency

TYPE - 60 Hz		P2		P1		Q (m³/h - l/min)							
1~	3~			1~	3~	0	12	24	36	48	51	54	57
						0	200	400	600	800	850	900	950
		HP	kW	kW		H (m)							
FV 160	**FV 160T**	1,5	1,1	3,4	3	12,0	10,7	8,3	5,9	3,4	2,8		
FV 210	**FV 210T**	2	1,5	3,7	3,6	13,7	12,5	9,9	7,3	4,5	3,8	3,2	
-	**FV 310T**	3	2,2	-	3,9	15,6	14,2	11,6	8,7	5,5	4,8	4,1	3,5

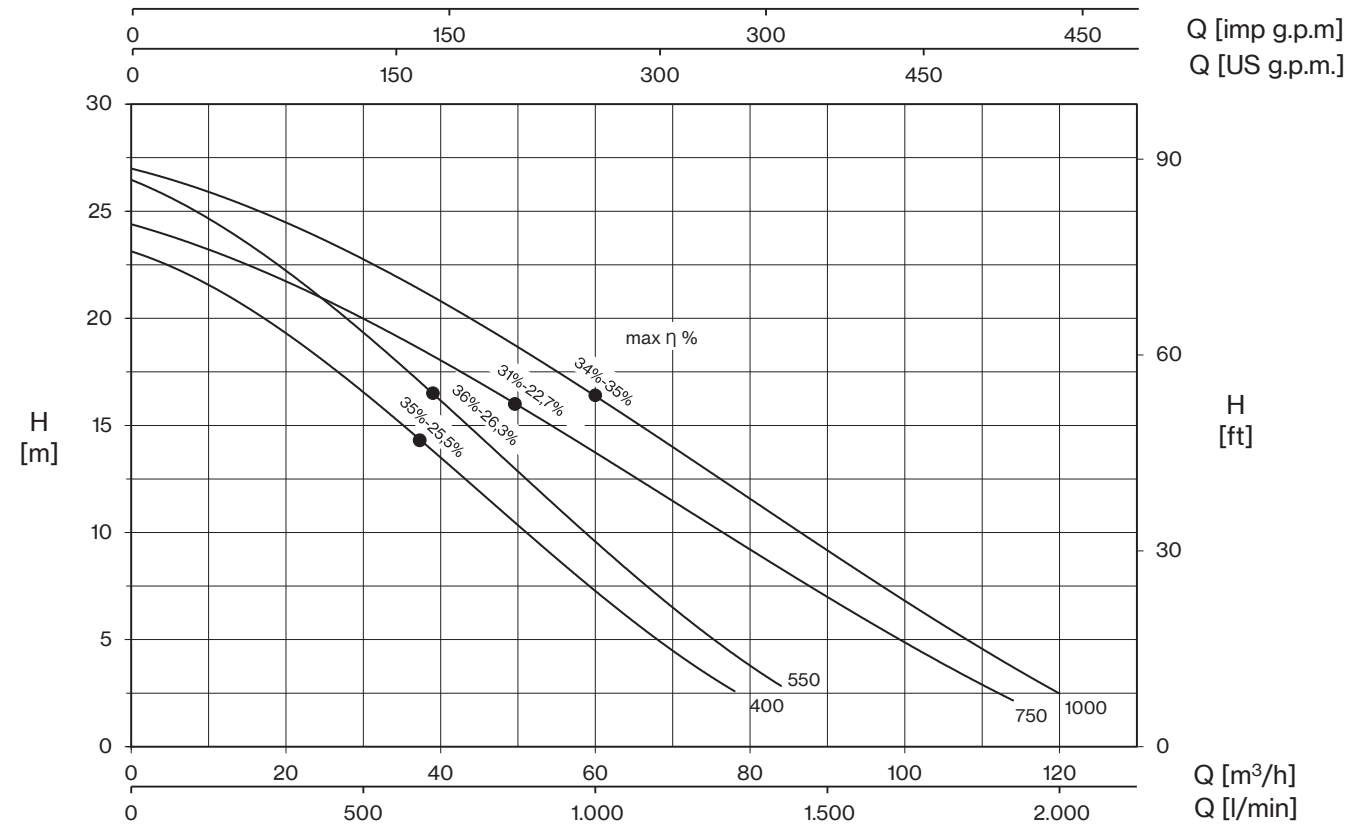

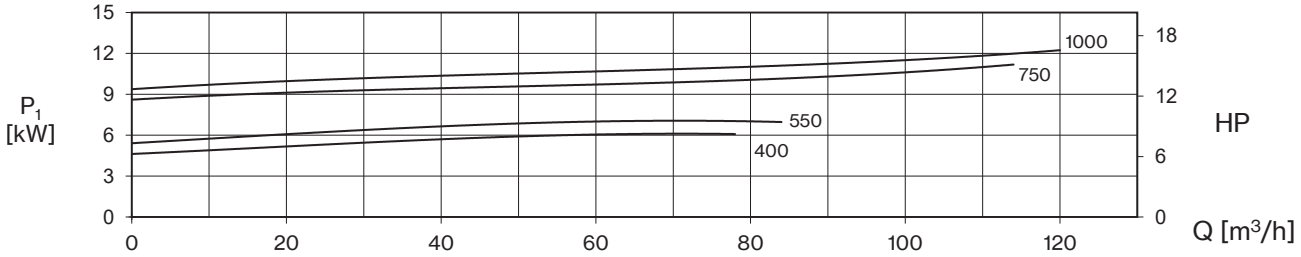

TYPE - 60 Hz	CURRENT		
3~	3~ 220V	3~ 380V (*)	220/380 V ⅄ / △
FV 400T	18,40	10,6	-
FV 550T	22,00	12,7	-
FV 750T	-	19,7	34,1
FV 1000T	-	21,4	37,0

(*) no standard execution

+ max η %

max hydraulic efficiency and respective total efficiency

TYPE - 60 Hz	P2		P1	Q (m³/h - l/min)								
3~				0	12	24	36	48	60	72	78	84
				0	200	400	600	800	1000	1200	1300	1400
	HP	kW	kW	H (m)								
FV 400T	4	3	6,2	23,1	21,2	18,3	14,7	10,9	7,3	4,1	2,5	
FV 550T	5,5	4	7,2	26,4	24,4	21,0	17,4	13,6	9,5	6,0	4,3	2,8

TYPE - 60 Hz	P2		P1	Q (m³/h - l/min)											
3~				0	12	24	36	48	60	72	84	96	108	114	120
				0	200	400	600	800	1000	1200	1400	1600	1800	1900	2000
	HP	kW	kW	H (m)											
FV 750T	7,5	5,5	11,0	24,4	23,0	21,0	18,7	16,4	13,9	11,1	8,2	5,6	3,3	2,2	
FV 1000T	10	7,5	12,3	27,1	25,5	23,8	21,6	19,1	16,4	13,7	10,6	7,6	4,9	3,7	2,6

FV

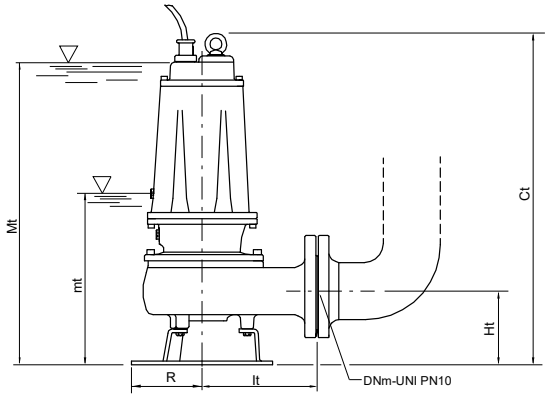

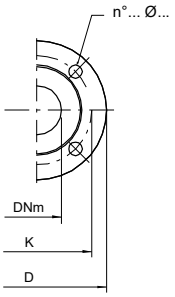

ACCESSORIES

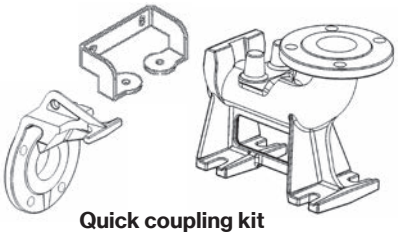

Quick coupling kit

Counterflange

mt: minimum working level
Mt: minimum submengence level for continuos duty

TYPE		DIMENSIONS (mm)							Kg	
1~	3~	Ct	Ht	R	It	mt	Mt	DNM	1~	3~
FV 160	**FV 160 T**	551	123	117	191	243	513	65	40	39
FV 210	**FV 210T**	551	123	117	191	243	513	65	42,5	40
-	**FV 310 T**	551	123	117	191	243	513	65	-	42,5
-	**FV 400T**	645	148	160	210	285	600	80	-	68
-	**FV 550T**	645	148	160	210	285	600	80	-	72
-	**FV 750T**	725	178	180	232	358	670	80	-	89
-	**FV 1000T**	725	178	180	232	358	670	80	-	92,5

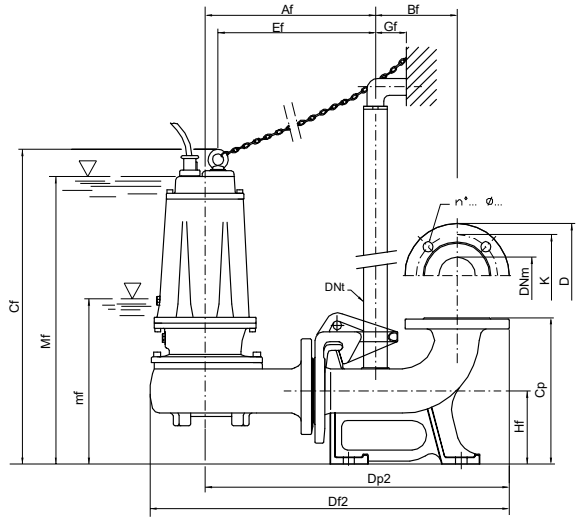

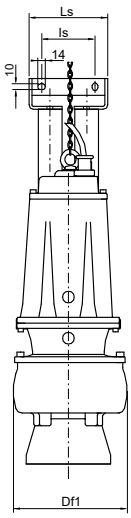

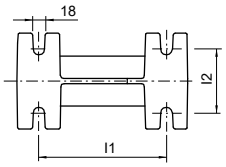

mf: minimum working level
Mf: minimum submengence level for continuos duty

TYPE	DIMENSIONS (mm)																	
	Af	Bf	Cf	Cp	Df1	Df2	Dp2	DNt	Ef	Gf	Hf	l1	l2	Is	Ls	mf	Mf	DNM
FV 160/P - FV 160T/P	303	145	559	260	200	639	541	1” ¼	280	55	130	200	100	95	140	251	521	65
FV 210/P - FV 210T/P	303	145	559	260	200	639	541	1” ¼	280	55	130	200	100	95	140	251	521	65
FV 310T/P	303	145	559	260	200	639	541	1” ¼	280	55	130	200	100	95	140	251	521	65
FV 400T/P	350	165	690	340	220	720	615	2”	319	85	190	250	140	130	180	327	642	80
FV 550T/P	350	165	690	340	220	720	615	2”	319	85	190	250	140	130	180	327	642	80
FV 750T/P	370	165	745	340	235	750	638	2”	338	85	190	250	140	130	180	380	690	80
FV 1000T/P	370	165	745	340	235	750	638	2”	338	85	190	250	140	130	180	380	690	80

Flange UNI PN 10 (mm)			
DNM	K	D	n°... ø...
65	145	185	4... 18...
80	160	200	8... 18...

FV4

Sewage
Vortex

Drainage pump for charged liquids with set-back Vortex type impeller for civil and industrial applications; specifically designed for very heavy use; available in the mobile or permanent versions with coupling feet.

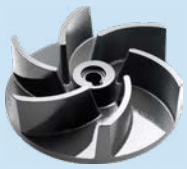

Grey water

Black water

Construction features

Painting	cataphoresis
Pump body	cast iron
Impeller	cast iron
Mechanical seal	double seal with oil barrier: silicon carbide on pump side, ceramic-graphite on motor side
Motor shaft	stainless steel AISI 304
Free passage	Ø max 50 mm
Max submergence	20 m
Liquid temperature	0 - 40 °C
Cable	H07 RN8F, 10 m
Bolts	A2 stainless steel
Foot support	galvanized iron
Gaskets	NBR rubber

Motor

4 poles induction motor	3~ 220/380V - 60Hz
Insulation class	F
Protection degree	IPX8

LOTS				
TYPE	TRUCK		CONTAINER	
	PALLET (cm)	N° pumps	PALLET (cm)	N° pumps
FV 250-4÷750-4T	85×110×190	8	100×120×190	12

FV 550 - 4 T -CF

- pump type
- poles
- motor **T** 3~
- counter-flange
  - not included
  - **CF** included

FV4

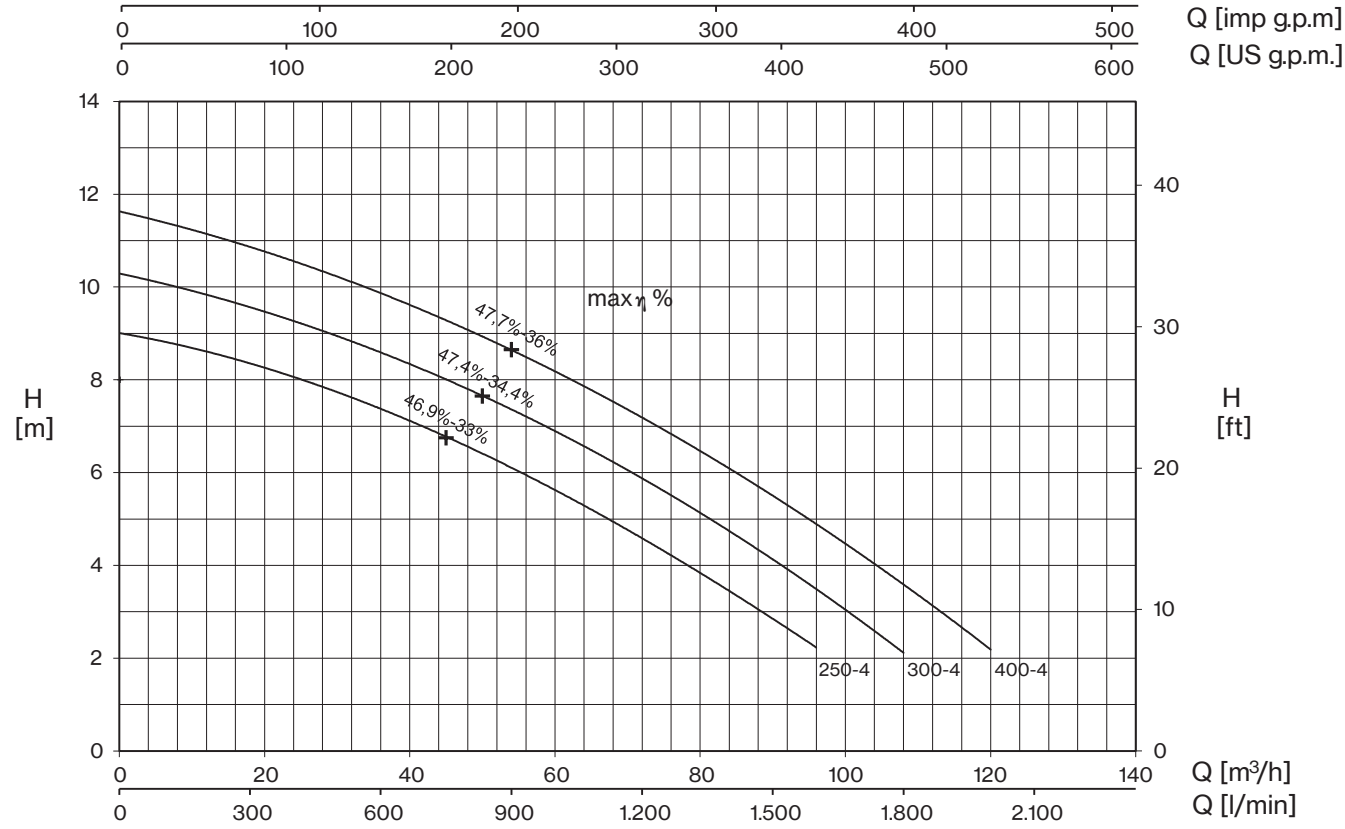

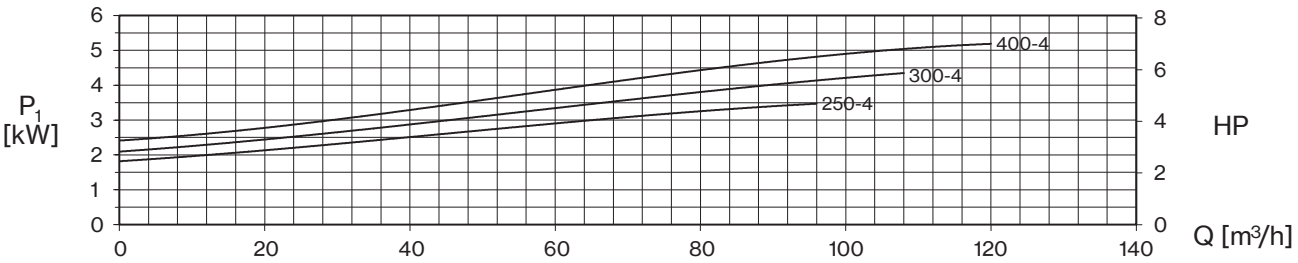

TYPE - 60 Hz	CURRENT		
3~	3~ 220V	3~ 380V (*)	220/380 V ⅄ / △
FV 250-4T	12,70	7,3	-
FV 300-4T	14,70	8,5	-
FV 400-4T	17,70	10,2	-

(*) no standard execution

+ max η %

max hydraulic efficiency and respective total efficiency

TYPE - 60 Hz	P2		P1	Q (m³/h - l/min)										
3~				0	12	24	36	48	60	72	84	96	108	120
				0	200	400	600	800	1000	1200	1400	1600	1800	2000
	HP	kW	kW	H (m)										
FV 250-4T	2,5	1,8	4	9	8,6	8,1	7,4	6,5	5,6	4,6	3,5	2,2		
FV 300-4T	3	2,2	4,8	10,3	9,8	9,3	8,6	7,8	6,9	5,8	4,8	3,5	2,1	
FV 400-4T	4	3	5,7	11,6	11,2	10,6	9,8	9	8,2	7,3	6,1	4,8	3,6	2,2

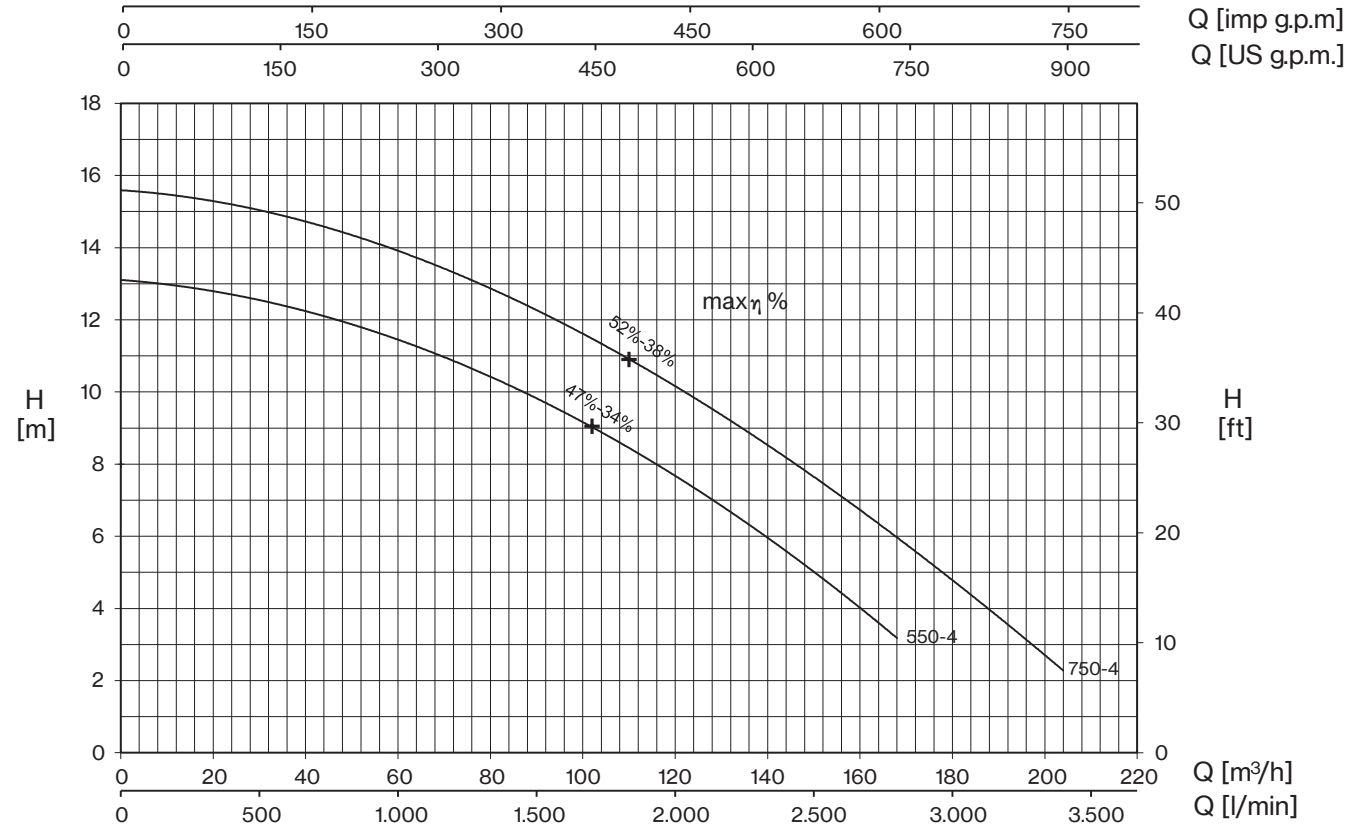

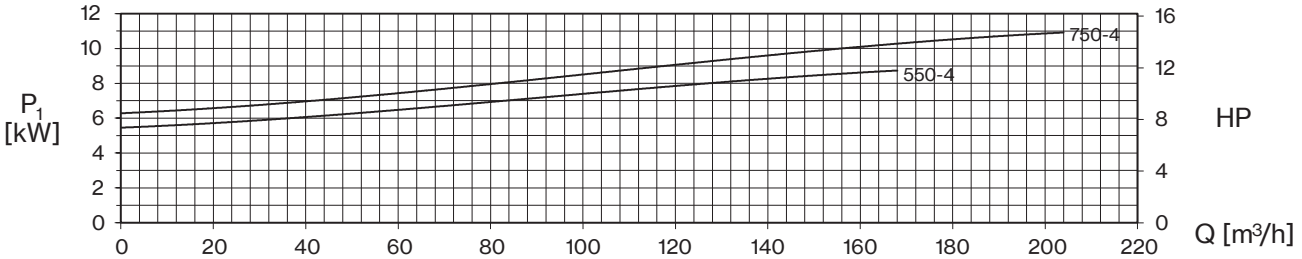

TYPE - 60 Hz	CURRENT		
3~	3~ 220V	3~ 380V (*)	220/380 V ⅄ / △
FV 550-4T	-	15,8	27,3
FV 750-4T	-	18,6	32,2

(*) no standard execution

+ max η %

max hydraulic efficiency and respective total efficiency

TYPE - 60 Hz	P2		P1	Q (m³/h - l/min)								
3~				0	24	48	72	96	120	144	168	204
				0	400	800	1200	1600	2000	2400	2800	3400
	HP	kW	kW	H (m)								
FV 550-4T	5,5	4	9,0	13,1	12,7	12	10,8	9,4	7,8	5,5	3,2	
FV 750-4T	7,5	5,5	10,7	15,6	15,2	14,4	13,3	11,9	10,2	8,2	5,9	2,3

FV4

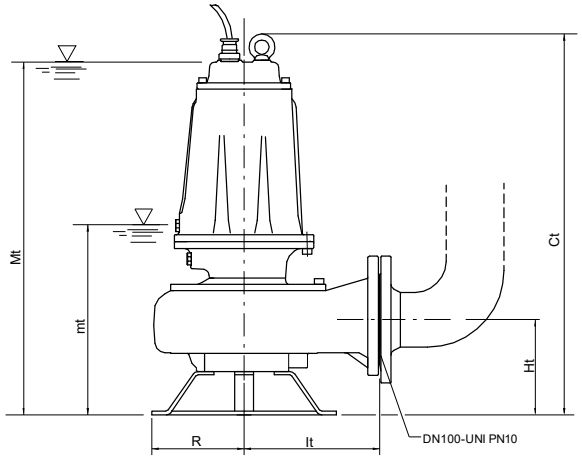

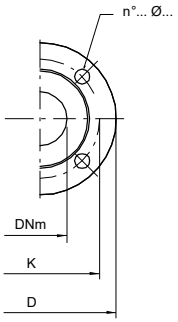

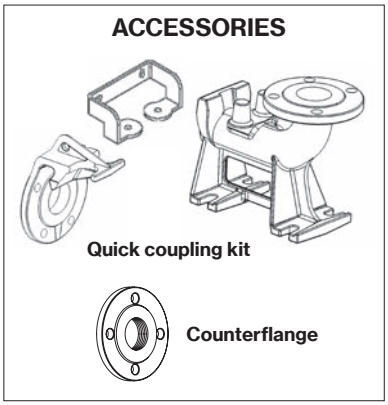

mt: minimum working level
Mt: minimum submengence level for continuos duty

TYPE	DIMENSIONS (mm)							Kg
	Ct	Ht	R	It	mt	Mt	DNM	
FV 250-4T	660	165	160	235	300	614	100	70,5
FV 300-4T	660	165	160	235	300	614	100	71,5
FV 400-4T	660	165	160	235	300	614	100	75
FV 550-4T	715	195	180	276	385	695	100	102,5
FV 750-4T	715	195	180	276	385	695	100	109

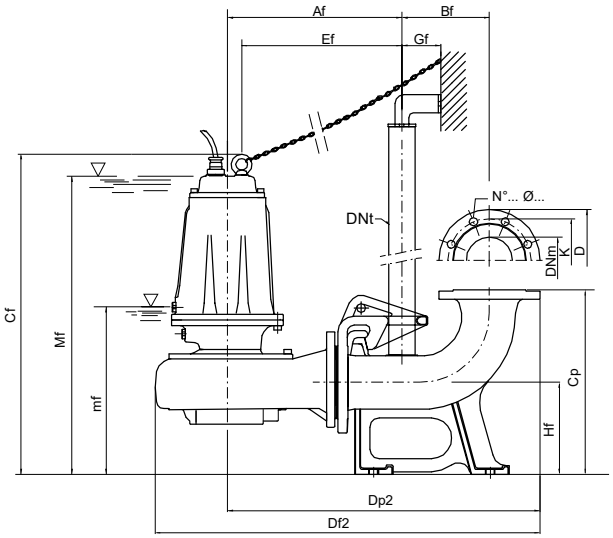

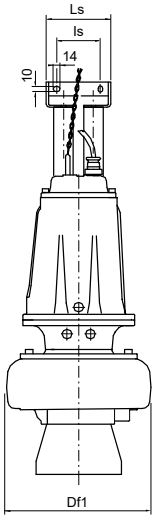

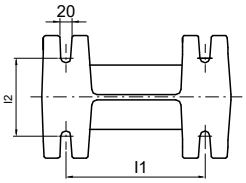

mf: minimum working level
Mf: minimum submengence level for continuos duty

TYPE	DIMENSIONS (mm)																	
	Af	Bf	Cf	Cp	Df1	Df2	Dp2	DNt	Ef	Gf	Hf	l1	l2	Is	Ls	mf	Mf	DNM
FV 250-4T/P	378	190	695	400	317	835	678	2”	347	85	200	250	140	130	180	335	650	100
FV 300-4T/P	378	190	695	400	317	835	678	2”	347	85	200	250	140	130	180	335	650	100
FV 400-4T/P	378	190	695	400	317	835	678	2”	347	85	200	250	140	130	180	335	650	100
FV 550-4T/P	419	190	755	400	371	900	719	2”	384	85	200	250	140	130	180	390	700	100
FV 750-4T/P	419	190	755	400	371	900	719	2”	384	85	200	250	140	130	180	390	700	100

Flange UNI PN 10 (mm)			
DNM	K	D	n°... ø...
100	180	220	8... 18...

SUBMERSIBLE WELL PUMPS

SUBMERSIBLE WELL PUMPS

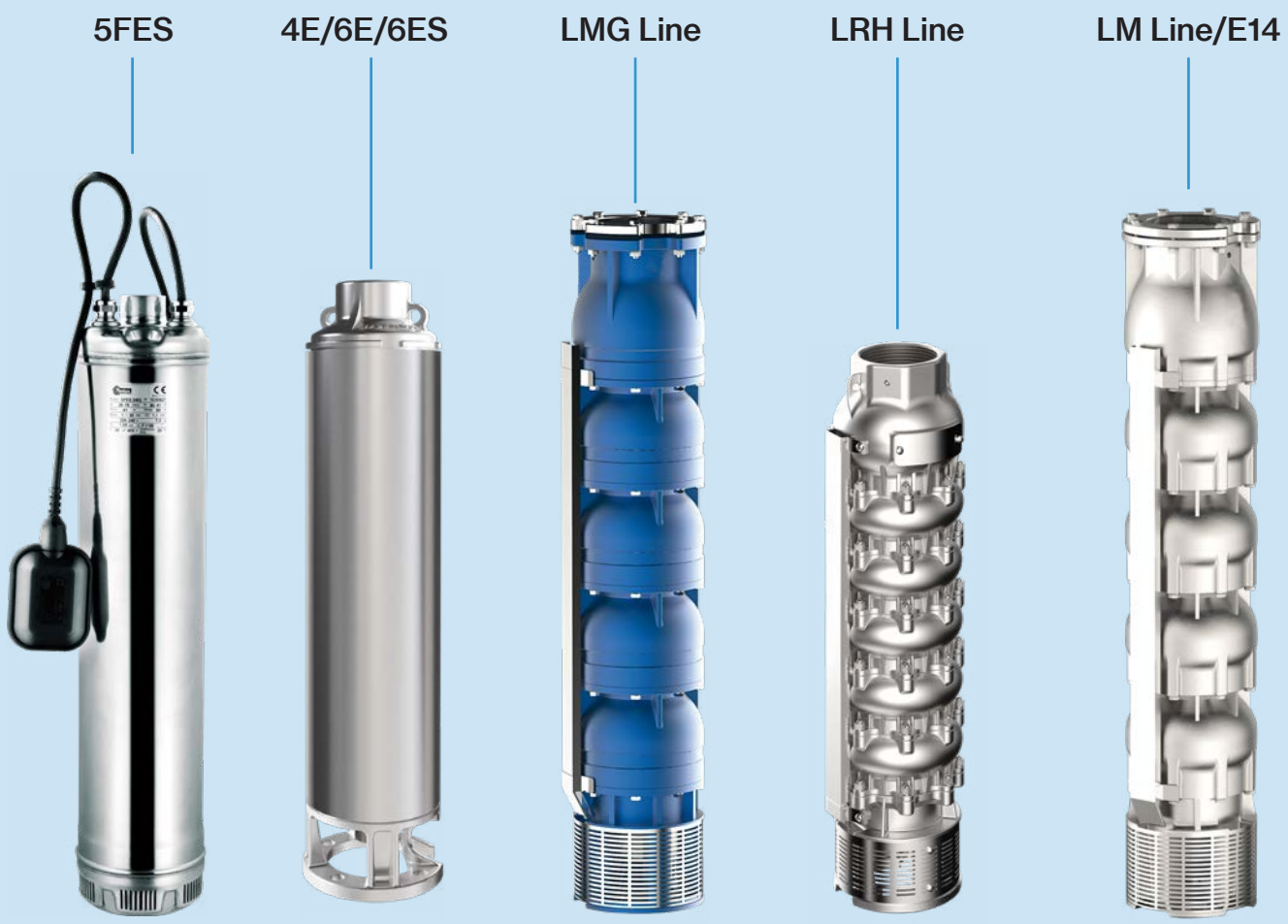

- **5FES line:** 5” electric pumps with pressed steel body and stainless steel hydraulic.
- **4E, 6E, 6ES line**: 4”, 6” electric well pumps with pressed steel body, and polymer hydraulics. Coupling to the motor according to Nema flange.
- **6-8-10LMG line**: 6”, 8” and 10” electric well pumps with cast iron hydraulics. Non-return valve in the delivery port and motor coupling according to Nema flange.
- **LM, LRH and E14 line**: 6”, 8”, 10”, 12” and 14” electric well pumps manufactured with a micro-casting process that allows to obtain very smooth hydraulic surfaces and therefore high hydraulic efficiency values, all combined with a high mechanical resistance thanks to the cast steel structure. The range is available in AISI304, AISI316 and Duplex steel tyFES with flow rates up to 860m3/h and 800 m maximum head. The check valve is incorporated in the delivery port, while coupling with the motor is ensured by NEMA flanging.

Applications:

- Water supply for civil and industrial uses
- Distribution in aqueducts
- Agricultural irrigation
- Installation on wells and groundwater withdrawal
- Reverse osmosis plants

SUBMERSIBLE WELL PUMPS

Low-Medium flow

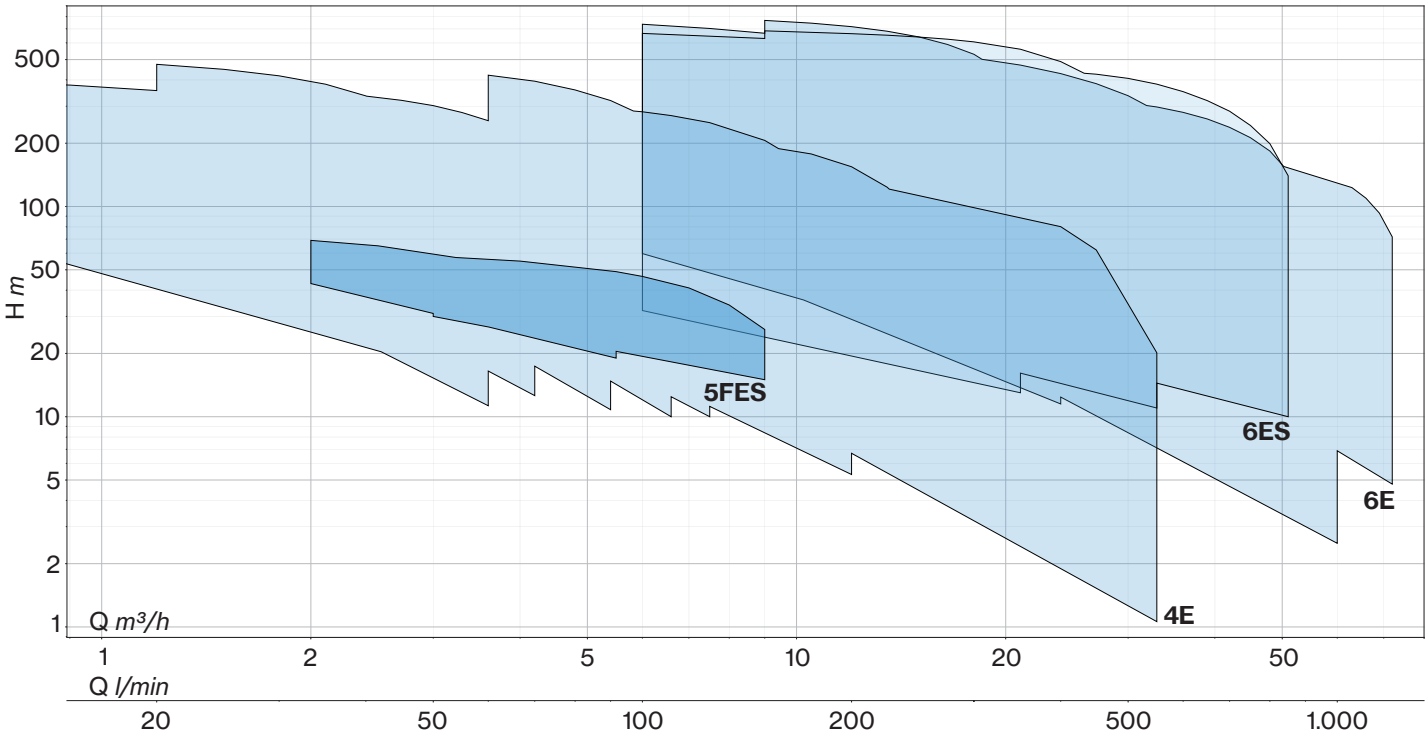

High flow

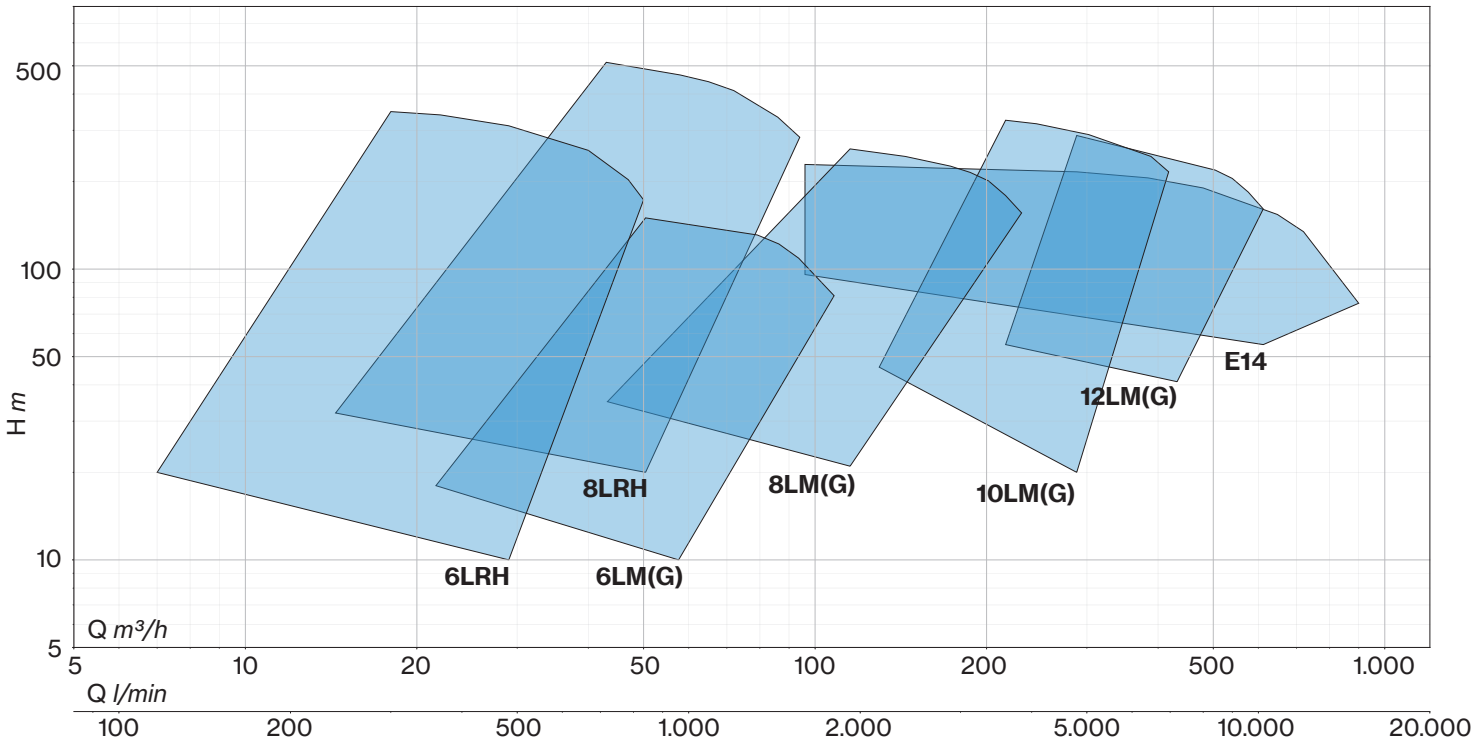

Name key

5 FES line

5 FES 3 / 5 G

- G — float switch
- (blank) — without float switch
- 5 — No. of stages
- 3 — Nominal flow rate (m^3/h)
- (blank) — Motor: 1~
- T — Motor: 3~
- FES — Pump type
- 5 — Pump size (inches)

4E - 6E line

4 E 125 / 04 - 07 - 4MPET7

- 4MPET7 — Motor model if included
- (blank) — Motor flange size in inches: as same as the pump size
- -4 — Motor flange size in inches: 6E pump with 4" motor flange
- 07 — Nominal power HP x10
- 04 — No. of stages
- 125 — Nominal flow rate (l/min)
- E — Version: polymer hydraulic
- 4 — Pump size (4" - 6")
- 4 E — Pump type

6ES line

6ES 18 / 13 - 175 Y

- Y — dual cable gland
- (blank) — single cable gland
- 175 — Nominal power HP x10
- 13 — No. of stages
- 18 — Impeller design
- 6ES — Pump type

LRH - LM lines

8 LM X 80 / 03 -6 -6R40

- **Motor model** if included
- **Motor flange size in inches** (only specified if different from the pump size)
- **No. of stages**
- **Nominal flow rate (m³/h)**
- **Impeller material**
  - ( ) as same as the pump material
  - **s** AISI 304
  - **x** AISI 316
  - **d** Duplex
  - **l** AISI 904L
- **Material**
  - **G** cast iron
  - **S** AISI 304
  - **X** AISI 316
  - **D** Duplex
  - **L** AISI 904L
- **Version**
  - **LRH** radial
  - **LM** semi-axial
- **Pump size (inches)**
- **Pump type**

E14 line

E 14 A / 1 D - 10 -

- **Motor model** if included
- **Motor flange size in inches** (only specified if different from the pump size)
- **Impeller reduction type**
- **No. of stages**
- **A** flow rate up to 480 m3/h
  - **B** flow rate up to 800 m3/h
- **Pump size (inches)**
- **Pump type**

5FES

Submersible Well Pumps

5” submersible multistage centrifugal pumps. All components in contact with fluid are made of AISI 304 stainless steel. Particulary suitable for water distribution rainwater collection, irrigation, dewatering fountains, wash down unit. Single phase versions have an internal capacitor and thermal motorprotector.

Construction features	
Delivery outlet	1” ¼ G
External jacket, impellers and diffusers	stainless steel AISI 304
Passage of solids	0.5 mm
Depth of immersion	max 20 m
Liquid temperature	-5 °C +40 °C
Quantity of sand in the water	max 50 g/m³
Cable	H07 RNF, 20 m
Number of startups/hr	max 20

Motor	
Asynchronous 2 poles	3~ 380/415V - 60 Hz 1~ 220/240V - 60 Hz (with thermal protection)
Insulation class	F
Protection degree	IP68

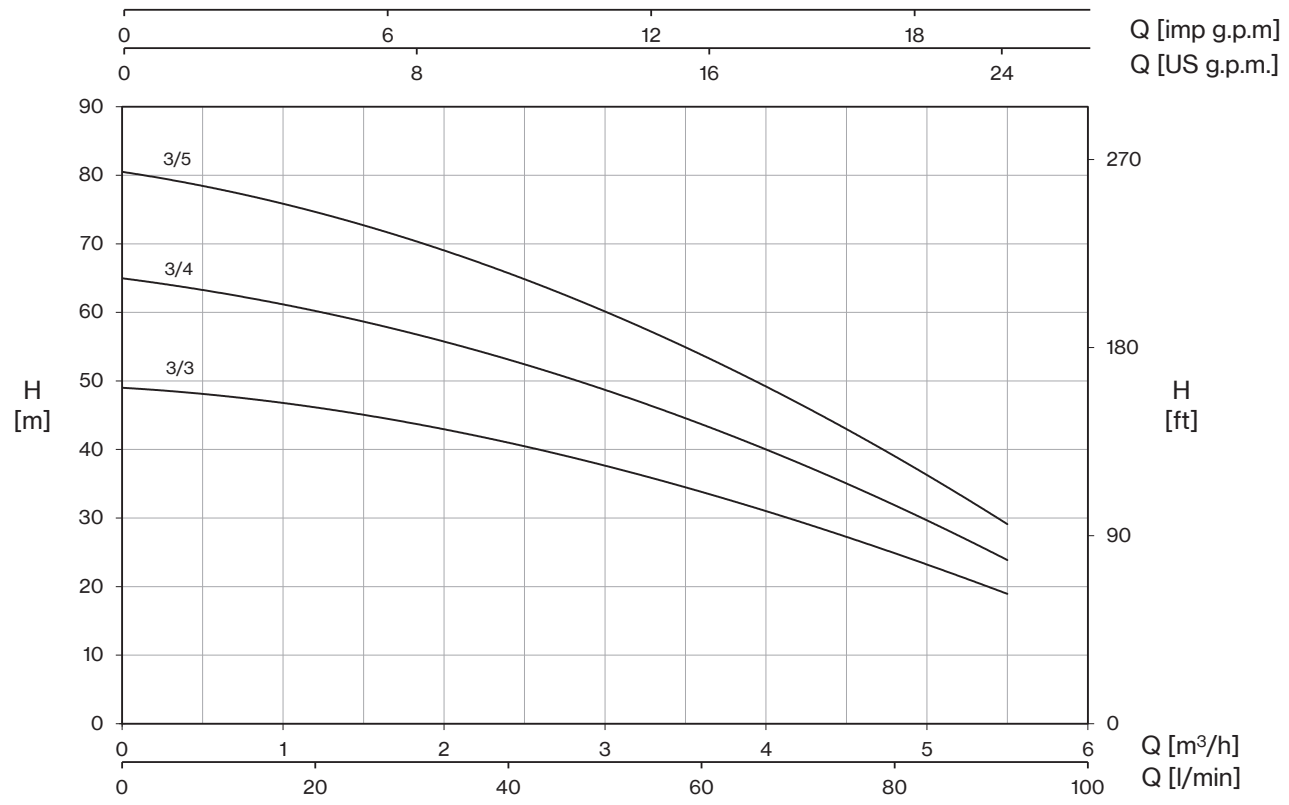

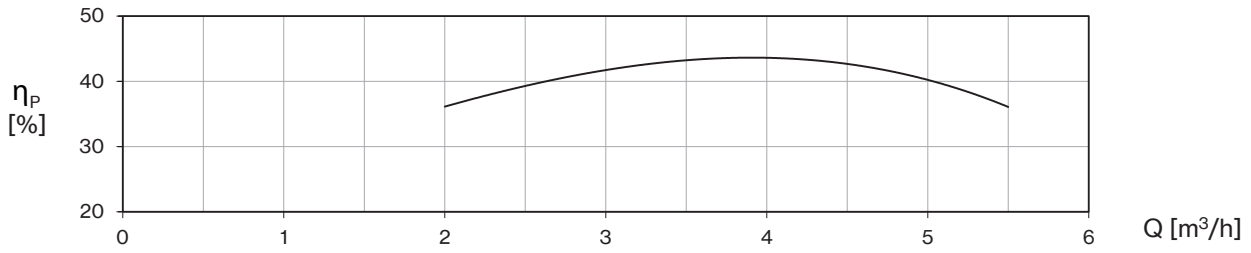

TYPE - 60 Hz		P2		P1	CURRENT			Q (m³/h - l/min)							
1~	3~				1~ 220 V	3~ 220V	3~ 380V	0	1,8	2,5	3	3,5	4,5	5	5,5
								0,0	29,2	41,7	50,0	58,3	75,0	83,3	91,7
		HP	kW	kW	A			H (m)							
5FES 3/3	**-**	1	0,75	1	5,2	-	-	47,9	42,7	39,1	36,1	33,0	26,1	22,0	17,9
-	**5FEST 3/3**	1	0,75	1	-	4,2	2,4	48,8	43,8	40,3	37,3	34,2	27,4	23,3	19,2
5FES 3/4	**-**	1,2	0,9	1,4	6,2	-	-	63,8	56,5	51,4	47,3	43,1	33,9	28,5	23,0
-	**5FEST 3/4**	1,2	0,9	1,4	-	4,5	2,6	64,4	57,4	52,5	48,4	44,3	35,1	29,8	24,3
5FES 3/5	**-**	1,5	1,1	1,8	8	-	-	79,9	71	64,9	59,8	54,7	43	36,5	29,6
-	**5FEST 3/5**	1,5	1,1	1,8	-	5,2	3	79,7	70,3	64,0	58,9	53,7	42,2	35,5	28,6

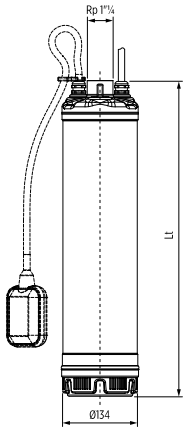

TYPE		DIMENSIONS (mm)						
1~	3~	Lt	DNM	I	L	M	1~	3~
5FES 3/3	**5FEST 3/3**	490	1" ¼ G	720	230	175	13,3	14,2
5FES 3/4	**5FEST 3/4**	520		720	230	175	14,7	14,7
5FES 3/5	**5FEST 3/5**	544		720	230	175	15,4	15,2

5FES 5

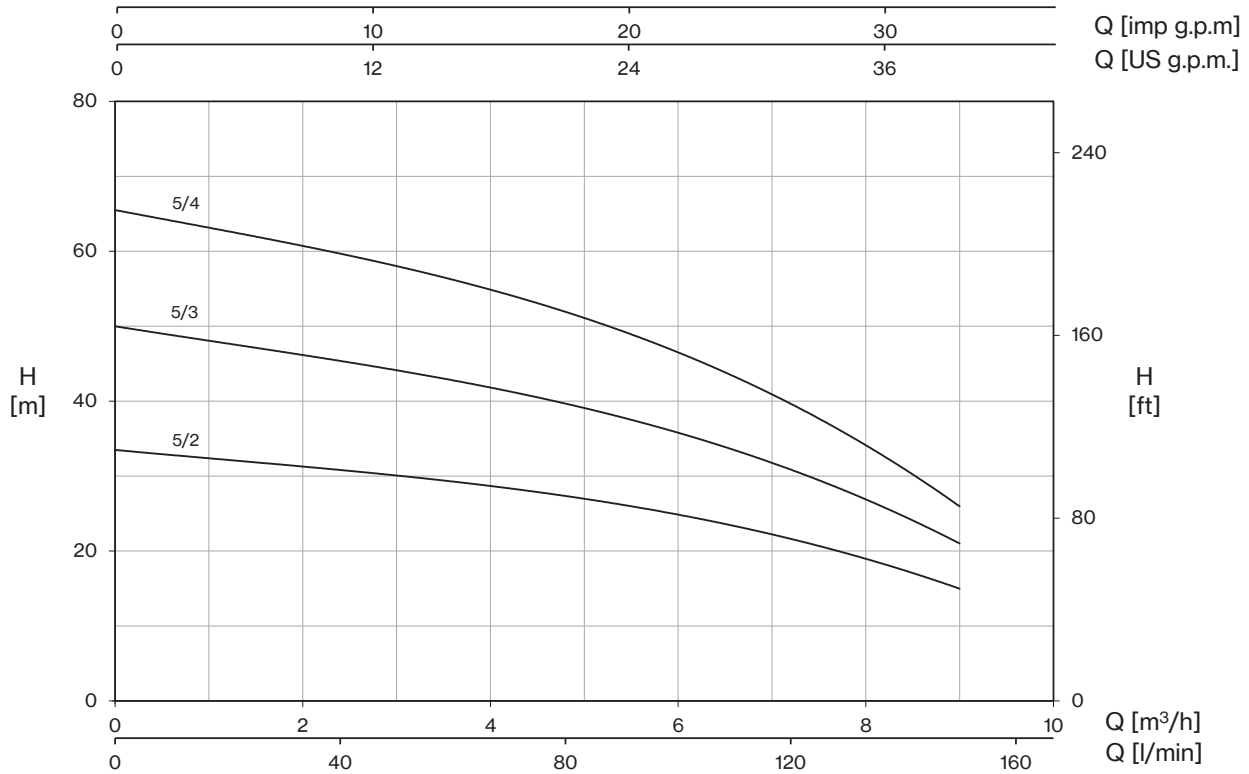

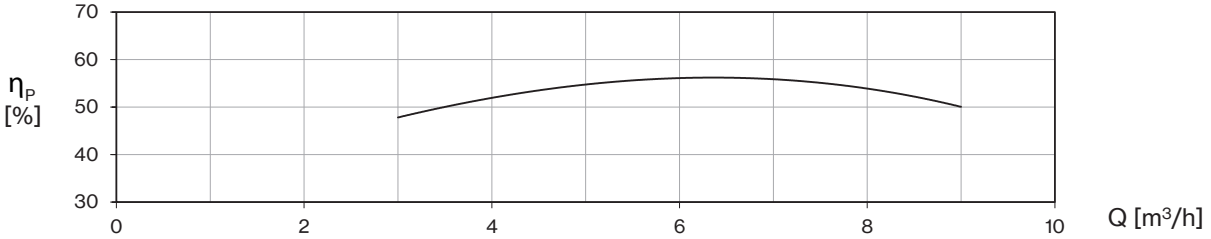

TYPE - 60 Hz		P2		P1	CURRENT			Q (m³/h - l/min)											
1~	3~				1~ 220 V	3~ 220V	3~ 380V	0	2,9	3,6	4,3	5	5,7	6,4	7,1	7,9	8,6	9,3	10
								0	47,6	59,5	71,4	83,3	95,2	107,1	119,0	131,0	142,9	154,8	166,7
		HP	kW	kW	A			H (m)											
5FES 5/2	**-**	1	0,75	1	5	-	-	33,1	29,6	28,6	27,4	26	24,5	22,9	21	18,5	15,7	12,5	9
-	**5FEST 5/2**	1	0,75	1	-	4	2,3	33,6	30,3	29,3	28,1	26,8	25,3	23,8	21,8	19,4	16,6	13,5	9,9
5FES 5/3	**-**	1,2	0,9	1,4	6,4	-	-	49,4	43,8	42,1	40,1	37,9	35,7	33,2	30,1	26,3	22,1	17,2	12
-	**5FEST 5/3**	1,2	0,9	1,4	-	4,7	2,7	49,8	44,4	42,8	40,9	38,8	36,6	34,2	31,2	27,4	23,3	18,4	13,2
5FES 5/4	**-**	1,5	1,1	1,8	8	-	-	65,8	58	56,3	53,6	50,7	47,8	44,5	40,4	35,3	29,8	23,2	16,5
-	**5FEST 5/4**	1,5	1,1	1,8	-	5,5	3,2	65,6	57,8	55,6	52,9	49,9	46,9	43,6	39,4	34,3	28,8	22,2	15,6

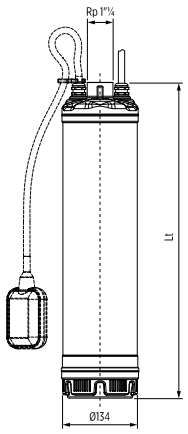

TYPE		DIMENSIONS (mm)						
1~	3~	Lt	DNM	I	L	M	1~	3~
5FES 3/3	**5FEST 3/3**	490	1" ¼ G	720	230	175	13,3	14,2
5FES 3/4	**5FEST 3/4**	520		720	230	175	14,7	14,7
5FES 3/5	**5FEST 3/5**	544		720	230	175	15,4	15,2

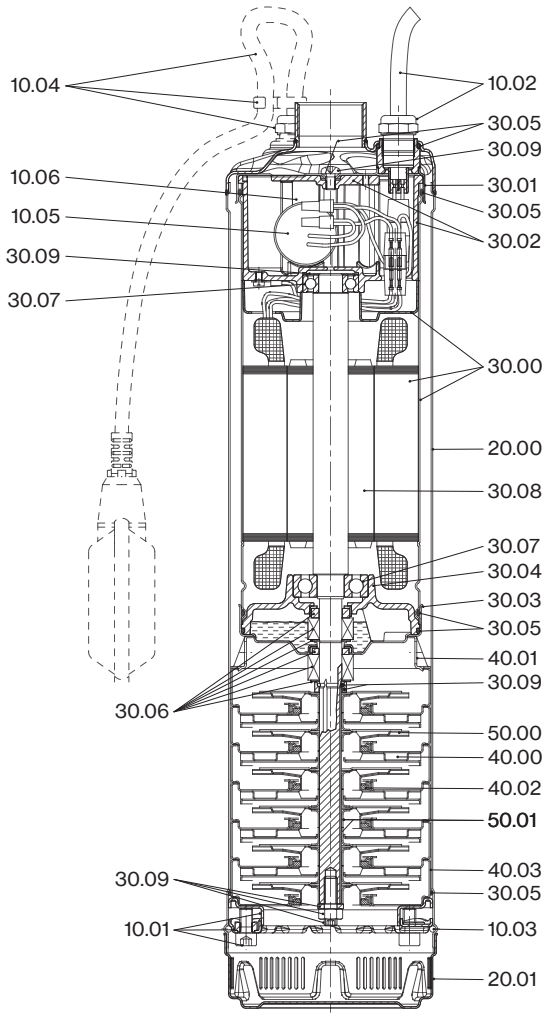

N. CODE	DESCRIPTION	MATERIAL
10.01	**SCREW AND FLANGES FOR PRE-LOADING**	AISI 304
10.02	**CABLE**	H07RN-F
10.02	**CABLE GLAND**	NICKEL PLATED BRASS / NBR
10.03	**SEEGER-RING**	AISI 304
10.04	**CABLE**	H07RN-F
10.04	**FLOAT SWITCH**	PP
10.04	**HOLDING CABLE PLATE**	PA66
10.04	**CABLE GLAND**	NICKEL PLATED BRASS / NBR
10.05	**CAPACITOR WITH CABLES AND CONNECTORS**	-
10.06	**CLAMP FOR CAPACITOR**	-
20.00	**OUTER CASE**	AISI 304
20.01	**SUCTION STRAINER**	AISI 304
30.00	**MOTOR HOUSING AND STATOR**	AISI 304
30.01	**UPPER MOTOR COVER**	AISI 304
30.02	**UPPER BEARING HOUSING WITH COVER**	ALUMINUM
30.03	**LOWER MOTOR COVER**	AISI 304
30.04	**LOWER BEARING COVER**	ALUMINUM
30.05	**O-RING**	NBR
30.06	**MECHANICAL SEALS**	CERAMIC ALUMINA / CARBON GRAPHITE / NBR
30.07	**BALL BEARINGS**	6202 2Z-C3 / 6303 2Z-C3
30.08	**ROTOR AND PUMP SHAFT**	AISI 304
30.09	**SCREWS, NUT AND WASHERS**	AISI 304 / AISI 316
40.00	**STAGE HOUSING AND DIFFUSER**	AISI 304
40.01	**SPACER**	AISI 304
40.02	**FLOATING NECK RING**	PPS
40.03	**INITIAL STAGE HOUSING**	AISI 304
50.00	**IMPELLER**	AISI 304
50.01	**IMPELLER SPACERS**	AISI 304

4E

Submersible Well Pumps

Designed for 4” wells, the 4E series is highly robust, compact, and patented (EP3274587A1). Engineered for easy maintenance, it features AISI 304 stainless steel supports manufactured via precision lost-wax casting, ensuring exceptional strength and reliability.

Technical Highlights: Patented independent floating impellers reduce axial load on the motor. Certified materials for drinking water allow the unit to operate dry without deterioration. Includes an integrated non-return valve.

Operation: Discharge outlets are 1” 1/4 G (radial) or 2” G (semi-axial). Max diameter: 98 mm (including cable guard). Suitable for continuous duty in vertical or horizontal positions. Minimum water level: 1m above suction.

Applications: Deep well extraction (domestic/industrial), lifting systems, surface/sprinkler irrigation, water supply networks, firefighting, and pressure tank supply.

Construction features	
Suction and delivery outlet	stainless steel AISI 304
External jacket	stainless steel AISI 304
Impellers	polyoxymethylene
Diffusers	polyoxymethylene and AISI 304
Support bush with sleeve	polyoxymethylene and ceramic
Shaft	stainless steel AISI 431B
Coupling	stainless steel AISI 316L
Quantity of sand in the water	250 g/m³
Max liquid temperature	45 °C
Non-return valve	up to 4E 200 models

4E 28

60 Hz - 3500 rpm											Q										
TYPE	P2		S.F.	SUITABLE MOTOR						l/min	0	5	10	15	20	25	30	35	40	45	50
				1~ 220V		1~ 110V		3~ 380V	3~ 220V	l/sec	0	0,08	0,17	0,25	0,33	0,42	0,50	0,58	0,67	0,75	0,83
	HP	kW		A	µF	A	µF	A		m³/h	0	0,3	0,6	0,9	1,2	1,5	1,8	2,1	2,4	2,7	3,0
4E 28/09-05	0,5	0,37	1,6	3,4	20	7,4	25	1,6	2,8	H (m)	80	79	77	74	70	64	57	49	39	29	17
4E 28/11-07	0,75	0,55	1,5	4,8	25	9,4	30	1,9	3,5		98	96	94	90	85	78	70	59	48	35	21
4E 28/15-10	1	0,75	1,4	6,4	35	14	40	2,6	4,9		133	131	128	123	116	107	95	81	65	48	29
4E 28/20-15	1,5	1,1	1,3	7,9	40	15,9	60	3,6	6,4		178	175	171	164	155	142	126	108	87	64	39
4E 28/26-20	2	1,5	1,25	10,1	50	-	-	4,5	8,2		231	228	222	214	201	185	164	140	113	83	50
4E 28/35-30	3	2,2	1,15	16,1	60	-	-	6,4	11		311	307	299	288	271	249	221	189	152	112	68
4E 28/46-40	4	3	1,15	-	-	-	-	8,3	14,8		409	403	393	378	356	328	291	248	200	148	89

MEI >= 0,7 (regulation EU N. 547/2012)

Max Eff. % =	49,3
Max kW / St. =	0,067

4E 40

60 Hz - 3500 rpm											Q									
TYPE	P2		S.F.	SUITABLE MOTOR						l/min	0	20	25	30	35	40	45	50	55	60
				1~ 220V		1~ 110V		3~ 380V	3~ 220V	l/sec	0	0,33	0,42	0,50	0,58	0,67	0,75	0,83	0,92	1,00
	HP	kW		A	µF	A	µF	A		m³/h	0	1,2	1,5	1,8	2,1	2,4	2,7	3,0	3,3	3,6
4E 40/08-05	0,5	0,37	1,6	3,4	20	7,4	25	1,6	2,8	H (m)	78	70	67	62	57	50	42	33	23	11
4E 40/11-07	0,75	0,55	1,5	4,8	25	9,4	30	1,9	3,5		108	97	92	85	78	68	57	45	31	16
4E 40/14-10	1	0,75	1,4	6,4	35	14	40	2,6	4,9		137	123	116	109	99	87	73	57	39	20
4E 40/19-15	1,5	1,1	1,3	7,9	40	15,9	60	3,6	6,4		186	167	158	147	134	118	99	77	54	27
4E 40/24-20	2	1,5	1,25	10,1	50	-	-	4,5	8,2		235	211	200	186	170	149	125	98	68	34
4E 40/32-30	3	2,2	1,15	16,1	60	-	-	6,4	11		313	281	266	248	226	199	167	130	90	45
4E 40/42-40	4	3	1,15	-	-	-	-	8,3	14,8		411	369	349	326	297	261	219	171	118	59
4E 40/51-55	5,5	4	1,15	-	-	-	-	9,6	17,1		499	448	424	395	361	317	266	208	144	72
4E 40/54-55	5,5	4	1,15	-	-	-	-	9,6	17,1		529	475	449	419	382	336	282	220	152	76

MEI >= 0,7 (regulation EU N. 547/2012)

Max Eff. % =	56,2
Max kW / St. =	0,076

4E 50

60 Hz - 3500 rpm											Q									
TYPE	P2		S.F.	SUITABLE MOTOR						l/min	0	30	35	40	45	50	55	60	65	70
				1~ 220V		1~ 110V		3~ 380V	3~ 220V	l/sec	0	0,50	0,58	0,67	0,75	0,83	0,92	1,00	1,08	1,17
	HP	kW		A	µF	A	µF	A		m³/h	0	1,8	2,1	2,4	2,7	3,0	3,3	3,6	3,9	4,2
4E 50/07-05	0,5	0,37	1,6	3,4	20	7,4	25	1,6	2,8	H (m)	66	55	52	48	44	39	33	27	20	13
4E 50/09-07	0,75	0,55	1,5	4,8	25	9,4	30	1,9	3,5		85	71	67	62	56	50	43	34	26	16
4E 50/11-10	1	0,75	1,4	6,4	35	14	40	2,6	4,9		103	87	82	76	69	61	52	42	32	20
4E 50/16-15	1,5	1,1	1,3	7,9	40	15,9	60	3,6	6,4		150	126	119	110	100	89	76	61	46	29
4E 50/20-20	2	1,5	1,25	10,1	50	-	-	4,5	8,2		188	158	149	138	125	111	95	77	58	36
4E 50/28-30	3	2,2	1,15	16,1	60	-	-	6,4	11		263	221	208	193	175	155	132	107	81	50
4E 50/36-40	4	3	1,15	-	-	-	-	8,3	14,8		338	284	268	248	225	200	170	138	104	65
4E 50/45-55	5,5	4	1,15	-	-	-	-	9,6	17,1		423	356	335	311	281	250	213	172	130	81
4E 50/48-55	5,5	4	1,15	-	-	-	-	9,6	17,1		451	379	357	331	300	266	227	184	138	86

MEI >= 0,7 (regulation EU N. 547/2012)

Max Eff. % =	52,3
Max kW / St. =	0,096

4E

4E 60

60 Hz - 3500 rpm											Q									
TYPE	P2		S.F.	SUITABLE MOTOR						l/min	0	40	45	50	55	60	65	70	80	90
				1~ 220V		1~ 110V		3~ 380V	3~ 220V	l/sec	0	0,67	0,75	0,83	0,92	1,00	1,08	1,17	1,33	1,50
	HP	kW		A	µF	A	µF	A		m³/h	0	2,4	2,7	3,0	3,3	3,6	3,9	4,2	4,8	5,4
4E 60/06-05	0,5	0,37	1,6	3,4	20	7,4	25	1,6	2,8	H (m)	58	50	48	45	42	38	35	30	21	11
4E 60/08-07	0,75	0,55	1,5	4,8	25	9,4	30	1,9	3,5		77	67	64	60	56	51	46	40	28	14
4E 60/10-10	1	0,75	1,4	6,4	35	14	40	2,6	4,9		97	84	80	76	70	64	58	51	35	18
4E 60/13-15	1,5	1,1	1,3	7,9	40	15,9	60	3,6	6,4		126	109	104	98	91	83	75	66	46	23
4E 60/17-20	2	1,5	1,25	10,1	50	-	-	4,5	8,2		165	142	136	128	119	109	98	86	60	31
4E 60/23-30	3	2,2	1,15	16,1	60	-	-	6,4	11		223	193	184	174	161	147	132	116	81	41
4E 60/30-40	4	3	1,15	-	-	-	-	8,3	14,8		290	251	240	227	210	192	173	152	105	54
4E 60/36-55	5,5	4	1,15	-	-	-	-	9,6	17,1		348	302	288	272	252	230	207	182	126	65
4E 60/40-55	5,5	4	1,15	-	-	-	-	9,6	17,1		387	335	320	302	280	256	230	202	140	72

MEI >= 0,7 (regulation EU N. 547/2012)

Max Eff. % =	63,5
Max kW / St. =	0,110

4E 68

60 Hz - 3500 rpm											Q								
TYPE	P2		S.F.	SUITABLE MOTOR						l/min	0	55	60	65	70	80	90	100	110
				1~ 220V		1~ 110V		3~ 380V	3~ 220V	l/sec	0	0,92	1,00	1,08	1,17	1,33	1,50	1,67	1,83
	HP	kW		A	µF	A	µF	A		m³/h	0	3,3	3,6	3,9	4,2	4,8	5,4	6,0	6,6
4E 68/05-05	0,5	0,37	1,6	3,4	20	7,4	25	1,6	2,8	H (m)	48	39	37	35	32	27	22	16	10
4E 68/06-07	0,75	0,55	1,5	4,8	25	9,4	30	1,9	3,5		58	46	44	41	39	33	26	20	12
4E 68/08-10	1	0,75	1,4	6,4	35	14	40	2,6	4,9		77	62	59	55	52	44	35	26	16
4E 68/11-15	1,5	1,1	1,3	7,9	40	15,9	60	3,6	6,4		106	85	81	76	71	60	48	36	22
4E 68/15-20	2	1,5	1,25	10,1	50	-	-	4,5	8,2		144	116	110	104	97	82	66	49	30
4E 68/19-30	3	2,2	1,15	16,1	60	-	-	6,4	11		182	146	139	131	122	104	84	62	38
4E 68/26-40	4	3	1,15	-	-	-	-	8,3	14,8		250	200	190	179	167	142	114	85	52
4E 68/32-55	5,5	4	1,15	-	-	-	-	9,6	17,1		307	246	234	221	206	175	141	104	64
4E 68/34-55	5,5	4	1,15	-	-	-	-	9,6	17,1		326	262	249	235	219	186	150	111	68

MEI >= 0,7 (regulation EU N. 547/2012)

Max Eff. % =	61,6
Max kW / St. =	0,128

4E 80

60 Hz - 3500 rpm											Q								
TYPE	P2		S.F.	SUITABLE MOTOR						l/min	0	60	65	70	80	90	100	110	125
				1~ 220V		1~ 110V		3~ 380V	3~ 220V	l/sec	0	1,00	1,08	1,17	1,33	1,50	1,67	1,83	2,08
	HP	kW		A	µF	A	µF	A		m³/h	0	3,6	3,9	4,2	4,8	5,4	6,0	6,6	7,5
4E 80/04-05	0,5	0,37	1,6	3,4	20	7,4	25	1,6	2,8	H (m)	40	35	34	33	30	27	23	18	10
4E 80/05-07	0,75	0,55	1,5	4,8	25	9,4	30	1,9	3,5		50	44	43	41	37	33	28	22	13
4E 80/06-10	1	0,75	1,4	6,4	35	14	40	2,6	4,9		60	53	51	49	45	40	34	27	15
4E 80/09-15	1,5	1,1	1,3	7,9	40	15,9	60	3,6	6,4		90	79	77	74	67	60	51	40	23
4E 80/11-20	2	1,5	1,25	10,1	50	-	-	4,5	8,2		110	97	94	90	82	73	62	49	28
4E 80/15-30	3	2,2	1,15	16,1	60	-	-	6,4	11		150	132	128	123	112	100	85	67	38
4E 80/20-40	4	3	1,15	-	-	-	-	8,3	14,8		200	176	170	164	149	133	113	90	50
4E 80/24-55	5,5	4	1,15	-	-	-	-	9,6	17,1		240	211	204	197	179	160	136	108	60
4E 80/26-55	5,5	4	1,15	-	-	-	-	9,6	17,1		260	228	221	214	194	173	147	117	65
4E 80/36-75	7,5	5,5	1,15	-	-	-	-	13,6	25		360	316	306	296	269	239	204	162	90
4E 80/48-100	10	7,5	1,15	-	-	-	-	17,2	34		480	421	408	395	359	319	272	216	120

MEI >= 0,7 (regulation EU N. 547/2012)

Max Eff. % =	60,4
Max kW / St. =	0,174

4E 125

60 Hz - 3500 rpm											Q								
TYPE	P2		S.F.	SUITABLE MOTOR						l/min	0	80	90	100	110	125	150	175	200
				1~ 220V		1~ 110V		3~ 380V	3~ 220V	l/sec	0	1,33	1,50	1,67	1,83	2,08	2,50	2,92	3,33
	HP	kW		A	µF	A	µF	A		m³/h	0	4,8	5,4	6,0	6,6	7,5	9,0	10,5	12,0
4E 125/03-05	0,5	0,37	1,6	3,4	20	7,4	25	1,6	2,8	H (m)	29	23	22	21	20	18	14	10	5
4E 125/04-07	0,75	0,55	1,5	4,8	25	9,4	30	1,9	3,5		38	30	29	28	26	24	19	13	7
4E 125/05-10	1	0,75	1,4	6,4	35	14	40	2,6	4,9		48	38	37	35	33	30	24	17	9
4E 125/07-15	1,5	1,1	1,3	7,9	40	15,9	60	3,6	6,4		67	53	51	49	46	42	33	23	12
4E 125/09-20	2	1,5	1,25	10,1	50	-	-	4,5	8,2		86	68	66	63	60	54	43	30	16

MEI >= 0,4 (regulation EU N. 547/2012)

Max Eff. % =	62,8
Max kW / St. =	0,207

4E 140

60 Hz - 3500 rpm											Q							
TYPE	P2		S.F.	SUITABLE MOTOR						l/min	0	90	100	110	125	150	175	200
				1~ 220V		1~ 110V		3~ 380V	3~ 220V	l/sec	0	1,50	1,67	1,83	2,08	2,50	2,92	3,33
	HP	kW		A	µF	A	µF	A		m³/h	0	5,4	6,0	6,6	7,5	9,0	10,5	12,0
4E 140/04-10	1	0,75	1,4	6,4	35	14	40	2,6	4,9	H (m)	39	32	31	30	28	23	17	10
4E 140/06-15	1,5	1,1	1,3	7,9	40	15,9	60	3,6	6,4		59	48	47	45	42	34	25	15
4E 140/08-20	2	1,5	1,25	10,1	50	-	-	4,5	8,2		78	65	63	60	56	46	34	20
4E 140/11-30	3	2,2	1,15	16,1	60	-	-	6,4	11		108	89	86	83	77	63	47	27
4E 140/14-40	4	3	1,15	-	-	-	-	8,3	14,8		137	113	110	105	97	80	59	35
4E 140/18-55	5,5	4	1,15	-	-	-	-	9,6	17,1		176	145	141	135	125	103	76	45
4E 140/20-55	5,5	4	1,15	-	-	-	-	9,6	17,1		196	162	157	150	139	115	85	50
4E 140/26-75	7,5	5,5	1,15	-	-	-	-	13,6	25		255	210	204	196	181	149	110	65
4E 140/36-100	10	7,5	1,15	-	-	-	-	17,2	34		353	291	282	271	251	206	152	90

MEI >= 0,4 (regulation EU N. 547/2012)

Max Eff. % =	66,7
Max kW / St. =	0,229

4E 175

60 Hz - 3500 rpm											Q								
TYPE	P2		S.F.	SUITABLE MOTOR						l/min	0	100	110	125	150	175	200	225	250
				1~ 220V		1~ 110V		3~ 380V	3~ 220V	l/sec	0	1,67	1,83	2,08	2,50	2,92	3,33	3,75	4,17
	HP	kW		A	µF	A	µF	A		m³/h	0	6,0	6,6	7,5	9,0	10,5	12,0	13,5	15,0
4E 175/02-05	0,5	0,37	1,6	3,4	20	7,4	25	1,6	2,8	H (m)	18	16	15	15	14	12	10	8	6
4E 175/03-07	0,75	0,55	1,5	4,8	25	9,4	30	1,9	3,5		28	24	23	22	21	18	16	12	8
4E 175/04-10	1	0,75	1,4	6,4	35	14	40	2,6	4,9		37	32	31	30	27	25	21	16	11
4E 175/05-15	1,5	1,1	1,3	7,9	40	15,9	60	3,6	6,4		46	39	38	37	34	31	26	20	14
4E 175/06-20	2	1,5	1,25	10,1	50	-	-	4,5	8,2		55	47	46	44	41	37	31	24	17

MEI >= 0,4 (regulation EU N. 547/2012)

Max Eff. % =	64,6
Max kW / St. =	0,284

4E

4E 200

60 Hz - 3500 rpm											Q									
TYPE	P2		S.F.	SUITABLE MOTOR						l/min	0	110	125	150	175	200	225	250	275	300
				1~ 220V		1~ 110V		3~ 380V	3~ 220V	l/sec	0	1,83	2,08	2,50	2,92	3,33	3,75	4,17	4,58	5,00
	HP	kW		A	µF	A	µF	A		m³/h	0	6,6	7,5	9,0	10,5	12,0	13,5	15,0	16,5	18,0
4E 200/04-15	1,5	1,1	1,3	7,9	40	15,9	60	3,6	6,4	H (m)	38	35	34	32	30	26	21	15	9	3
4E 200/05-20	2	1,5	1,25	10,1	50	-	-	4,5	8,2		48	43	42	40	37	32	26	19	12	4
4E 200/07-30	3	2,2	1,15	16,1	60	-	-	6,4	11		67	61	59	56	52	45	36	26	16	6
4E 200/10-40	4	3	1,15	-	-	-	-	8,3	14,8		96	87	85	81	74	64	52	38	23	8
4E 200/12-55	5,5	4	1,15	-	-	-	-	9,6	17,1		115	104	102	97	89	77	62	45	28	10
4E 200/14-55	5,5	4	1,15	-	-	-	-	9,6	17,1		134	121	119	113	104	90	72	53	32	11
4E 200/18-75	7,5	5,5	1,15	-	-	-	-	13,6	25		173	156	152	145	133	116	93	68	41	14
4E 200/24-100	10	7,5	1,15	-	-	-	-	17,2	34		230	208	203	193	178	155	124	90	55	19

MEI >= 0,4 (regulation EU N. 547/2012)

Max Eff. % =	61,8
Max kW / St. =	0,363

4E 400

60 Hz - 3500 rpm											Q								
TYPE	P2		S.F.	SUITABLE MOTOR						l/min	0	200	250	300	350	400	450	500	550
				1~ 220V		1~ 110V		3~ 380V	3~ 220V	l/sec	0	3,33	4,17	5,00	5,83	6,67	7,50	8,33	9,17
	HP	kW		A	µF	A	µF	A		m³/h	0	12,0	15,0	18,0	21,0	24,0	27,0	30,0	33,0
4E 400/01-05	0,5	0,37	1,6	3,4	20	7,4	25	1,6	2,8	H (m)	8	7	6	5	5	4	3	2	1
4E 400/02-10	1	0,75	1,4	6,4	35	14	40	2,6	4,9		17	13	12	11	10	8	7	4	2
4E 400/03-15	1,5	1,1	1,3	7,9	40	15,9	60	3,6	6,4		25	20	18	16	14	13	10	6	3
4E 400/04-20	2	1,5	1,25	10,1	50	-	-	4,5	8,2		34	27	24	22	19	17	13	8	4
4E 400/05-30	3	2,2	1,15	16,1	60	-	-	6,4	11		42	34	30	27	24	21	16	11	5
4E 400/08-40	4	3	1,15	-	-	-	-	8,3	14,8		67	54	48	43	39	34	26	17	8
4E 400/09-55	5,5	4	1,15	-	-	-	-	9,6	17,1		76	60	55	49	43	38	29	19	10
4E 400/10-55	5,5	4	1,15	-	-	-	-	9,6	17,1		84	67	61	54	48	42	33	21	11
4E 400/14-75	7,5	5,5	1,15	-	-	-	-	13,6	25		118	94	85	76	68	59	46	30	15
4E 400/19-100	10	7,5	1,15	-	-	-	-	17,2	34		160	127	115	103	92	80	62	40	20

MEI >= 0,7 (regulation EU N. 547/2012)
Non-return valve: not supplied

Max Eff. % =	70,1
Max kW / St. =	0,440

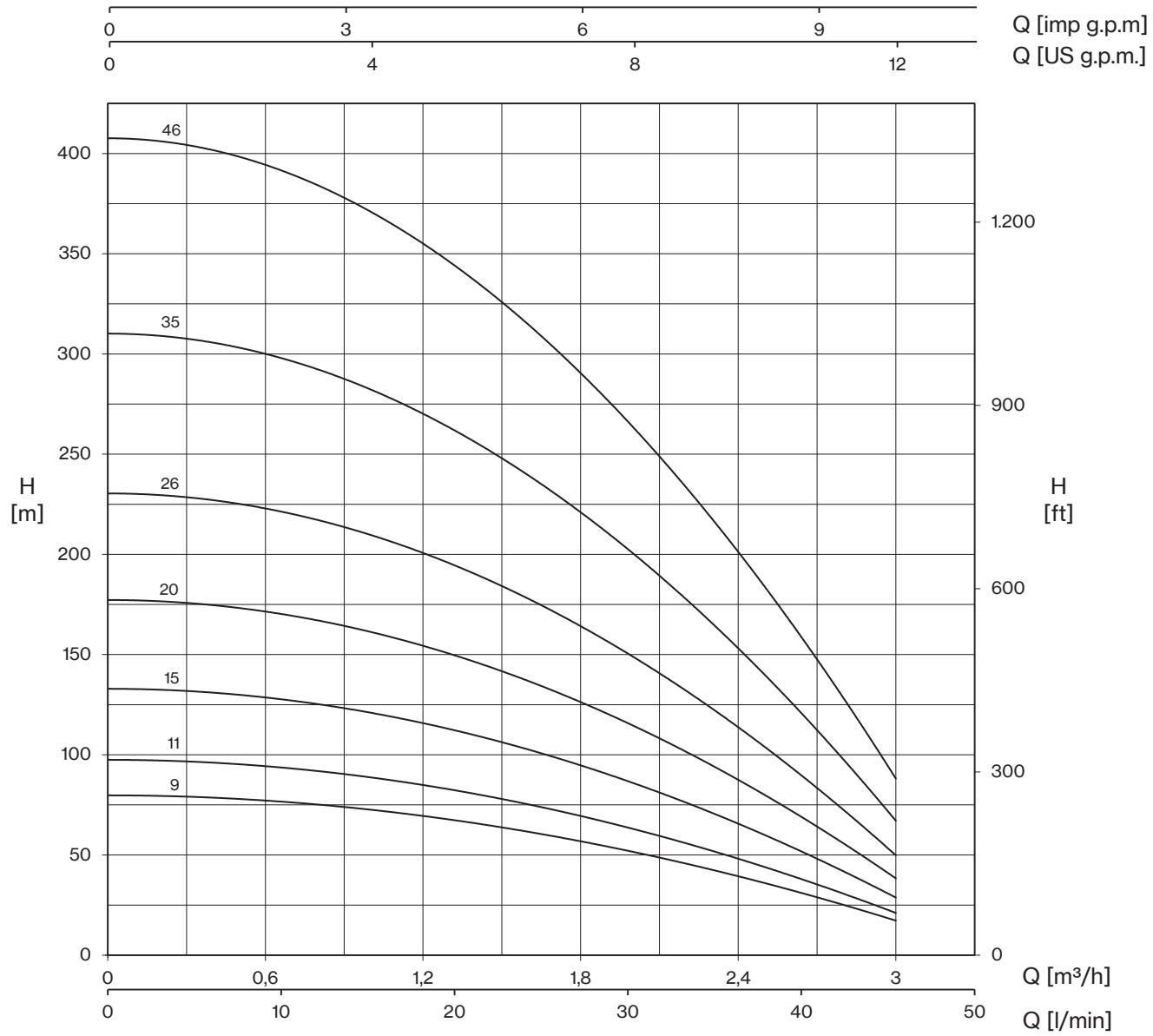
Q [imp g.p.m]
Q [US g.p.m.]
0
3
6
9
0
4
8
12
H
[m]
400
350
300
250
200
150
100
50
0
46
35
26
20
15
11
9
H
[ft]
1.200
900
600
300
0
0
0,6
1,2
1,8
2,4
3
Q [m³/h]
0
10
20
30
40
50
Q [l/min]

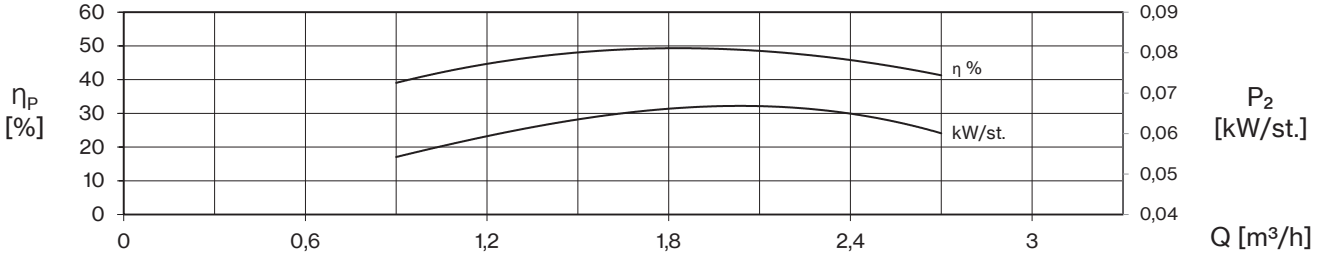
ηP
[%]
60
50
40
30
20
10
0
η %
kW/st.
0,09
0,08
0,07
0,06
0,05
0,04
P2
[kW/st.]
0
0,6
1,2
1,8
2,4
3
Q [m³/h]

4E 40

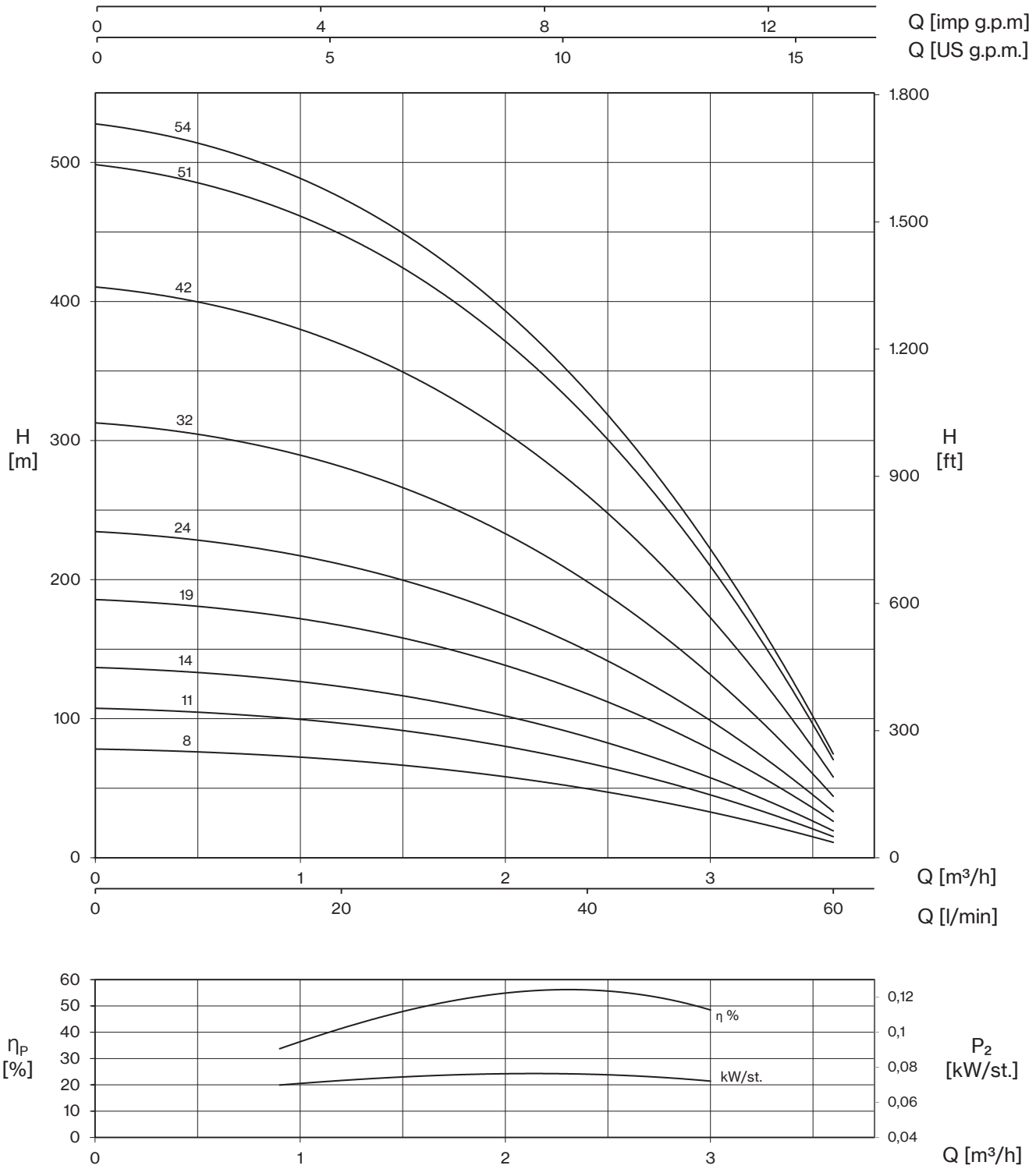
Q [imp g.p.m]
Q [US g.p.m.]
H [m]
H [ft]
54
51
42
32
24
19
14
11
8
Q [m³/h]
Q [l/min]
η %
kW/st.
ηP [%]
P2 [kW/st.]
Q [m³/h]

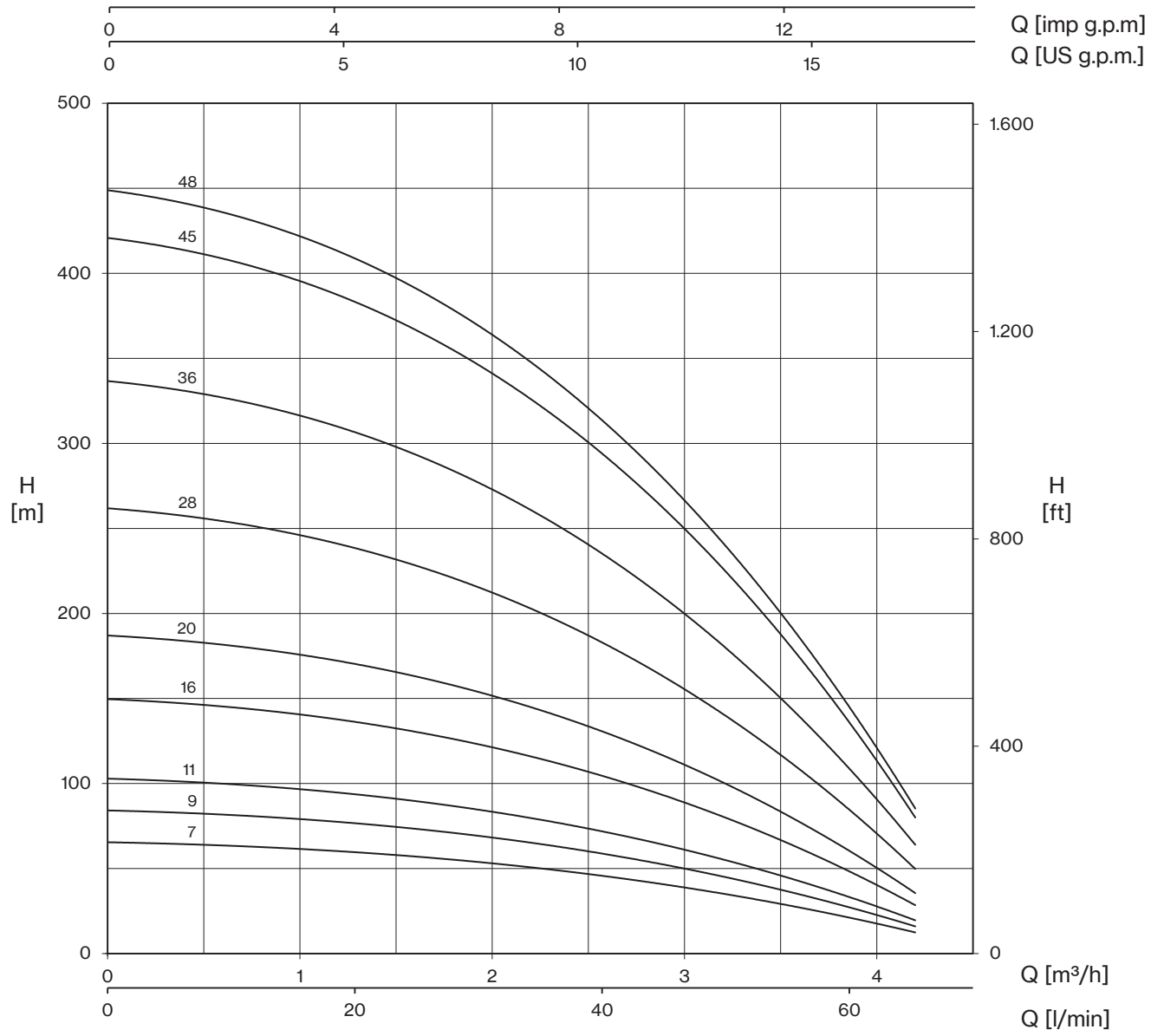
Q [imp g.p.m]
Q [US g.p.m.]
H [m]
H [ft]
48
45
36
28
20
16
11
9
7
Q [m³/h]
Q [l/min]

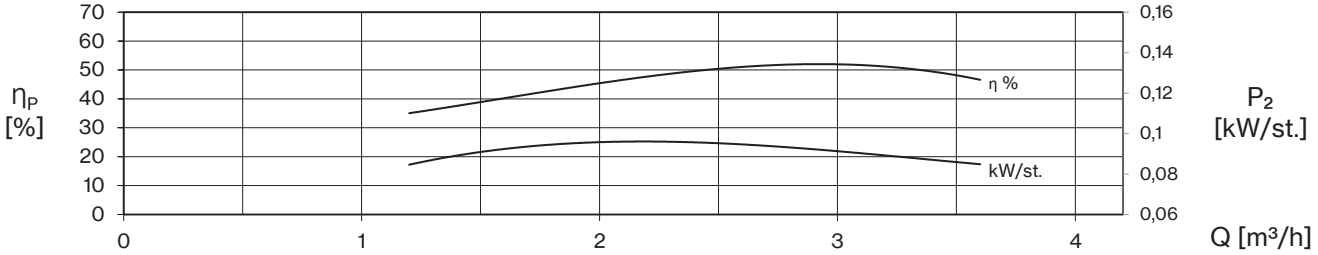
ηP [%]
η %
kW/st.
P2 [kW/st.]
Q [m³/h]

4E 60

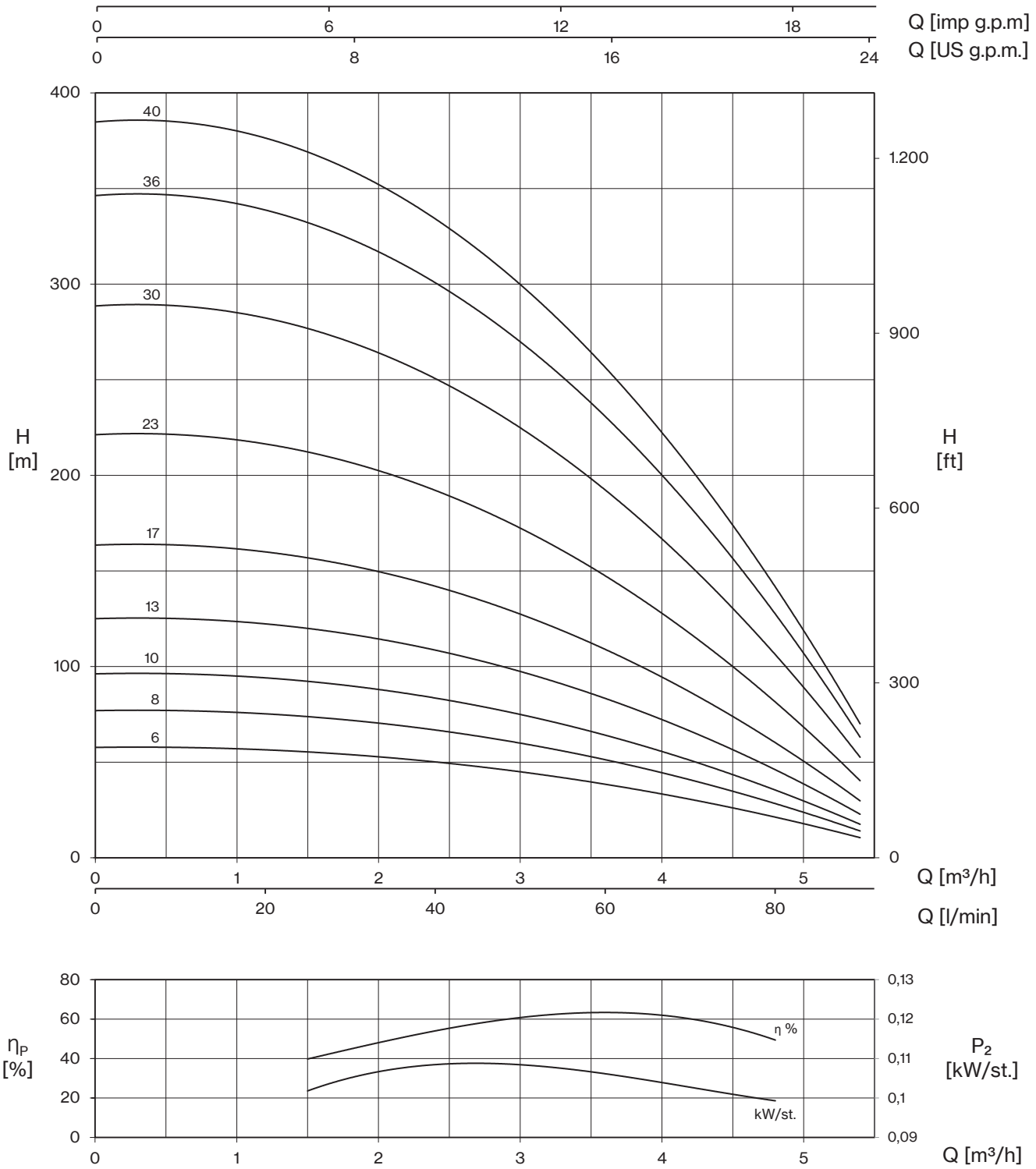
Q [imp g.p.m]
Q [US g.p.m.]
H [m]
H [ft]
40
36
30
23
17
13
10
8
6
Q [m³/h]
Q [l/min]
ηP [%]
η %
kW/st.
P2 [kW/st.]
Q [m³/h]

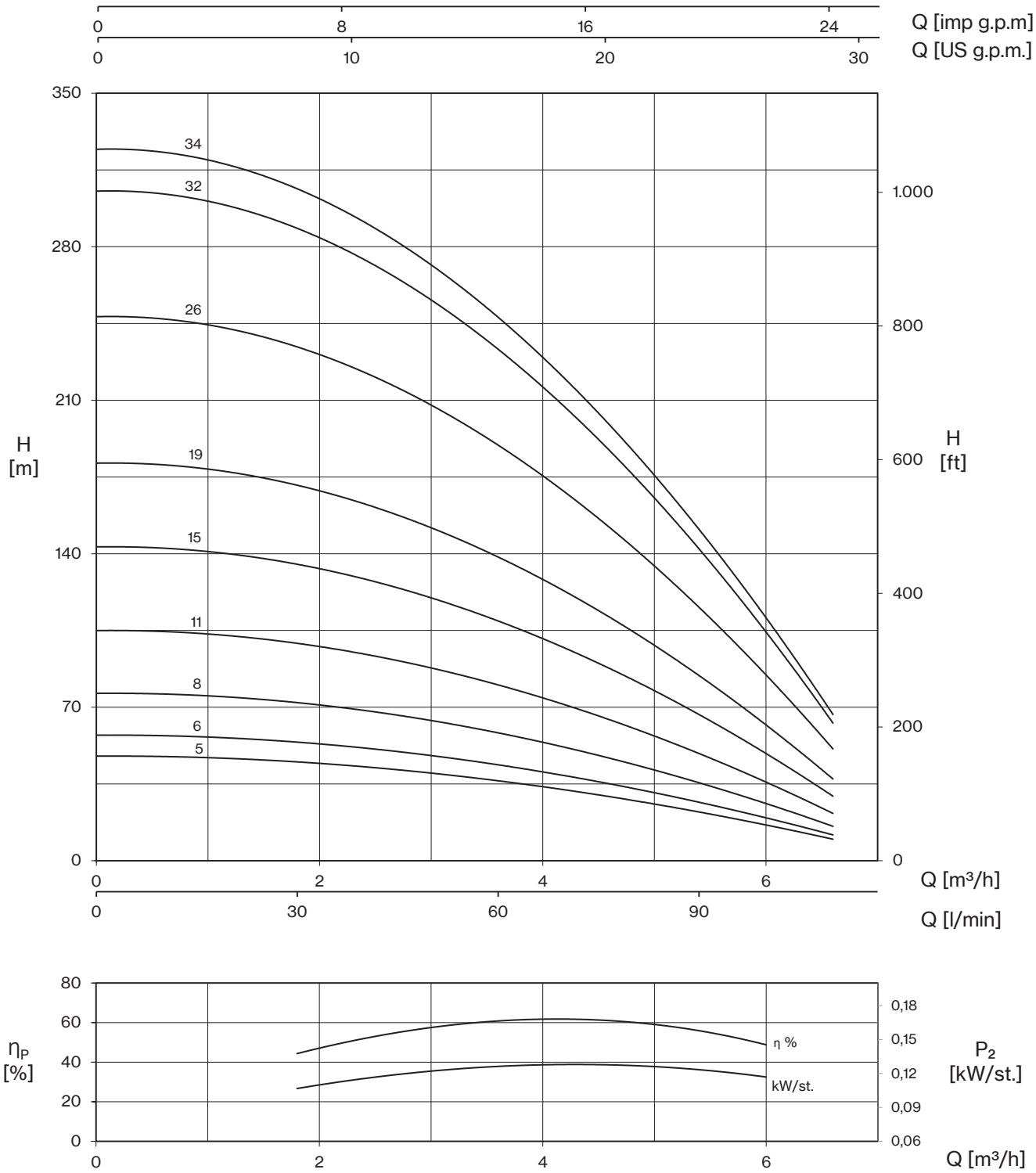
Q [imp g.p.m]
Q [US g.p.m.]
H [m]
H [ft]
Q [m³/h]
Q [l/min]
34
32
26
19
15
11
8
6
5
ηP [%]
η %
kW/st.
P2 [kW/st.]
Q [m³/h]

4E 80

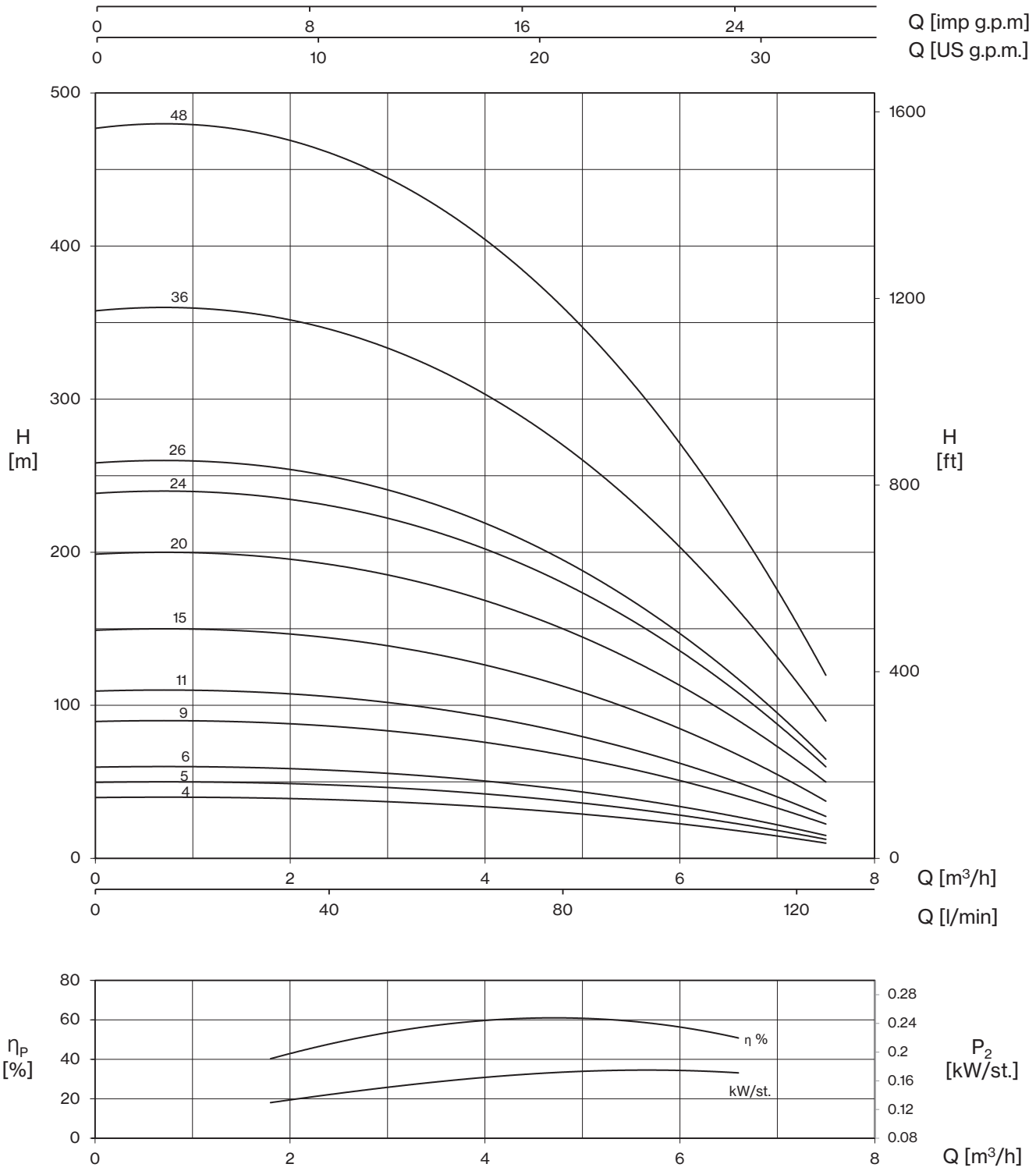
Q [imp g.p.m]
Q [US g.p.m.]
H [m]
H [ft]
48
36
26
24
20
15
11
9
6
5
4
Q [m³/h]
Q [l/min]
η %
kW/st.
ηP [%]
P2 [kW/st.]
Q [m³/h]

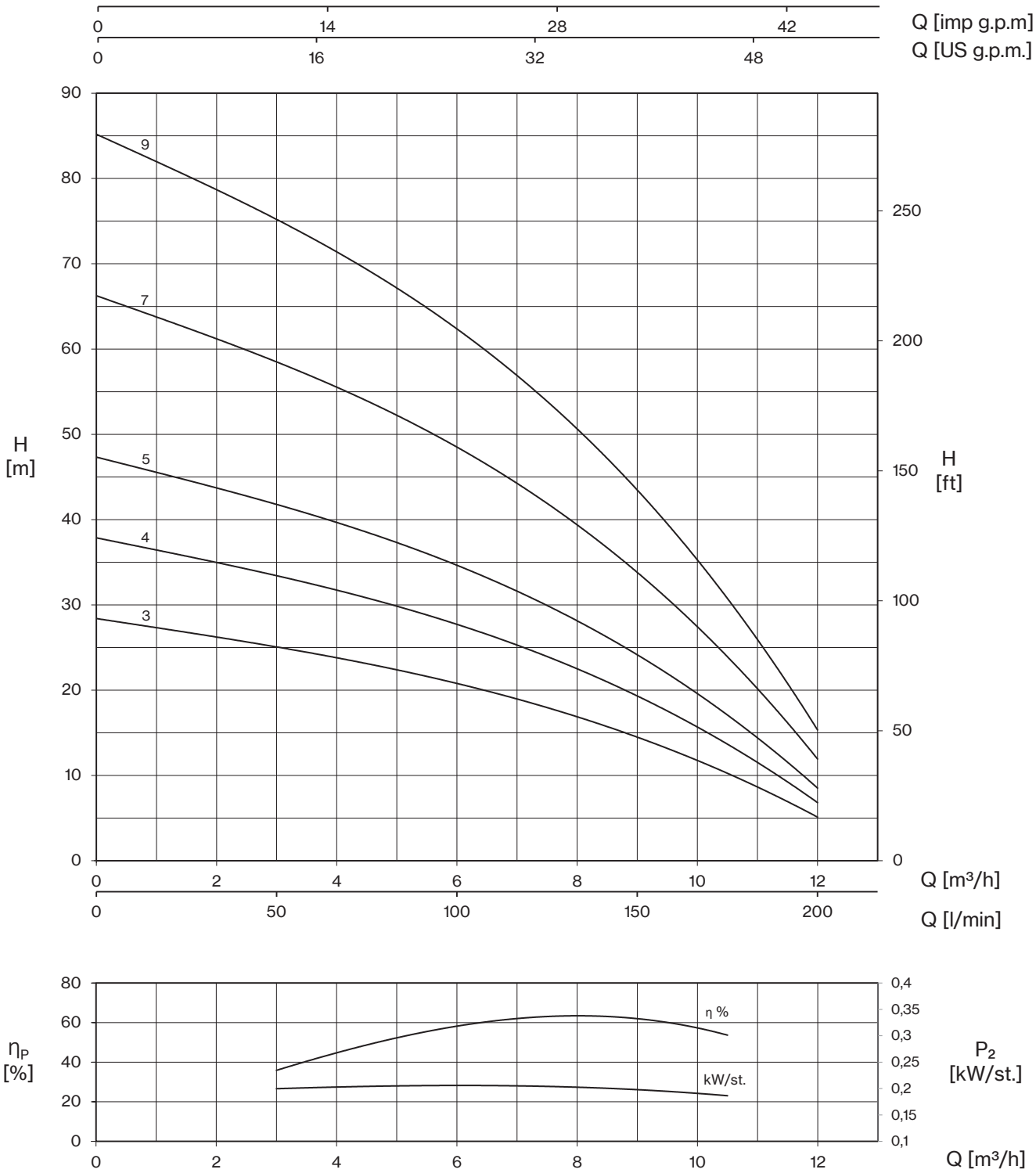
Q [imp g.p.m]
Q [US g.p.m.]
H [m]
H [ft]
Q [m³/h]
Q [l/min]
9
7
5
4
3
ηP [%]
P2 [kW/st.]
η %
kW/st.

4E 140

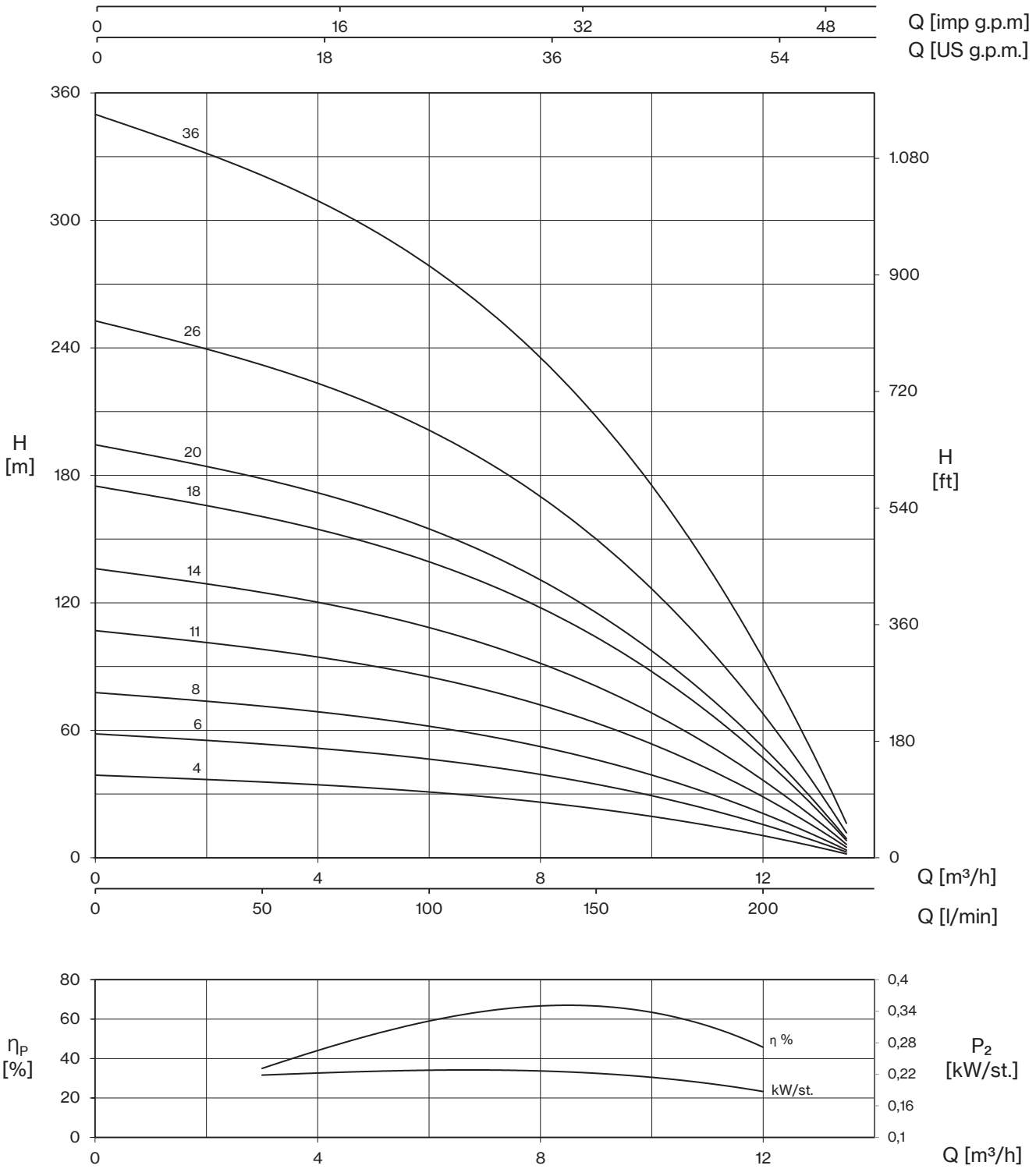
Q [imp g.p.m]
Q [US g.p.m.]
0
16
32
48
0
18
36
54
H
[m]
360
300
240
180
120
60
0
36
26
20
18
14
11
8
6
4
1.080
900
720
540
360
180
0
H
[ft]
0
4
8
12
Q [m³/h]
0
50
100
150
200
Q [l/min]
80
60
40
20
0
ηP
[%]
η %
kW/st.
0,4
0,34
0,28
0,22
0,16
0,1
P2
[kW/st.]
0
4
8
12
Q [m³/h]

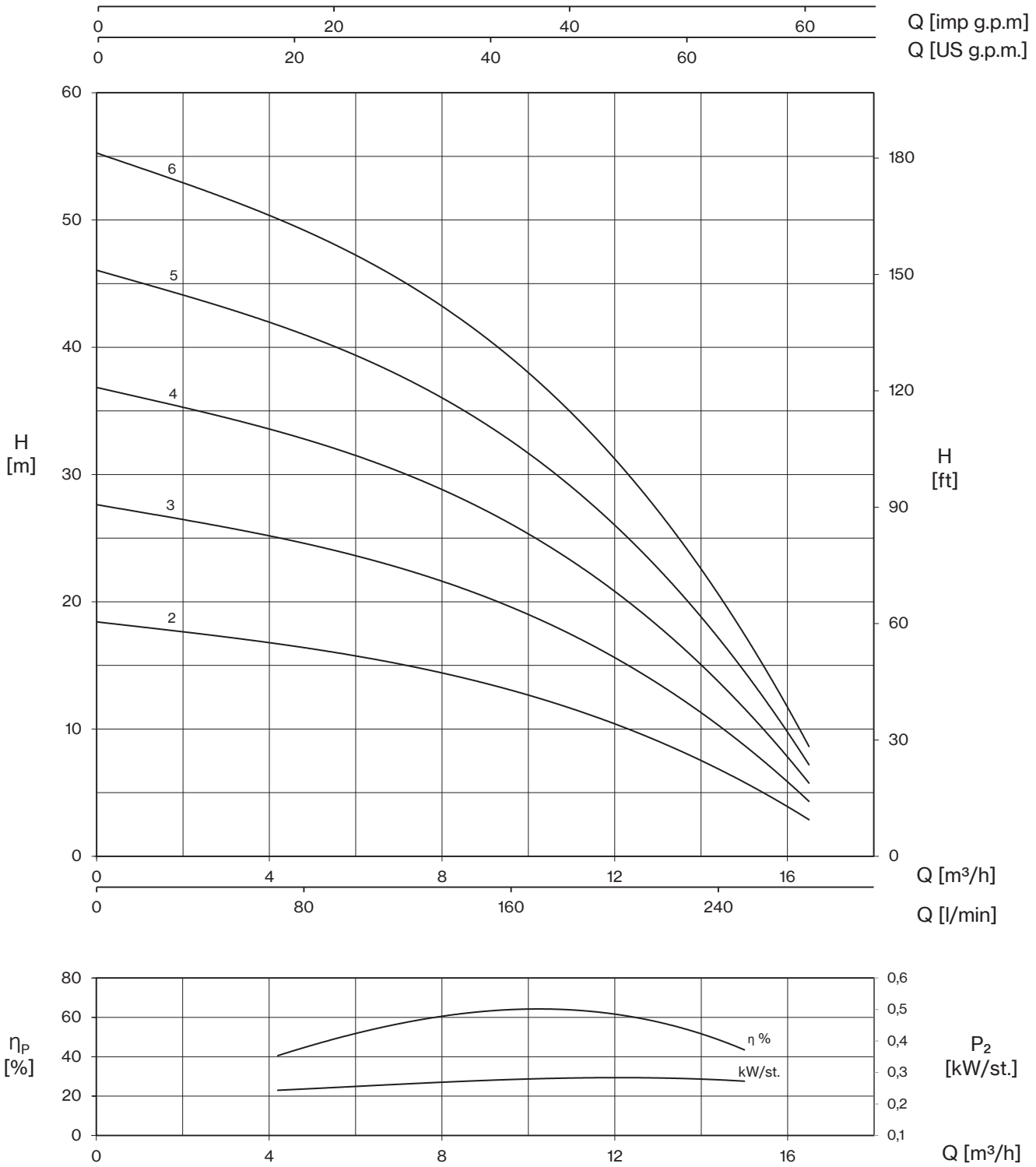
Q [imp g.p.m]
Q [US g.p.m.]
H [m]
H [ft]
Q [m³/h]
Q [l/min]
6
5
4
3
2
ηP [%]
η %
kW/st.
P2 [kW/st.]
Q [m³/h]

4E 200

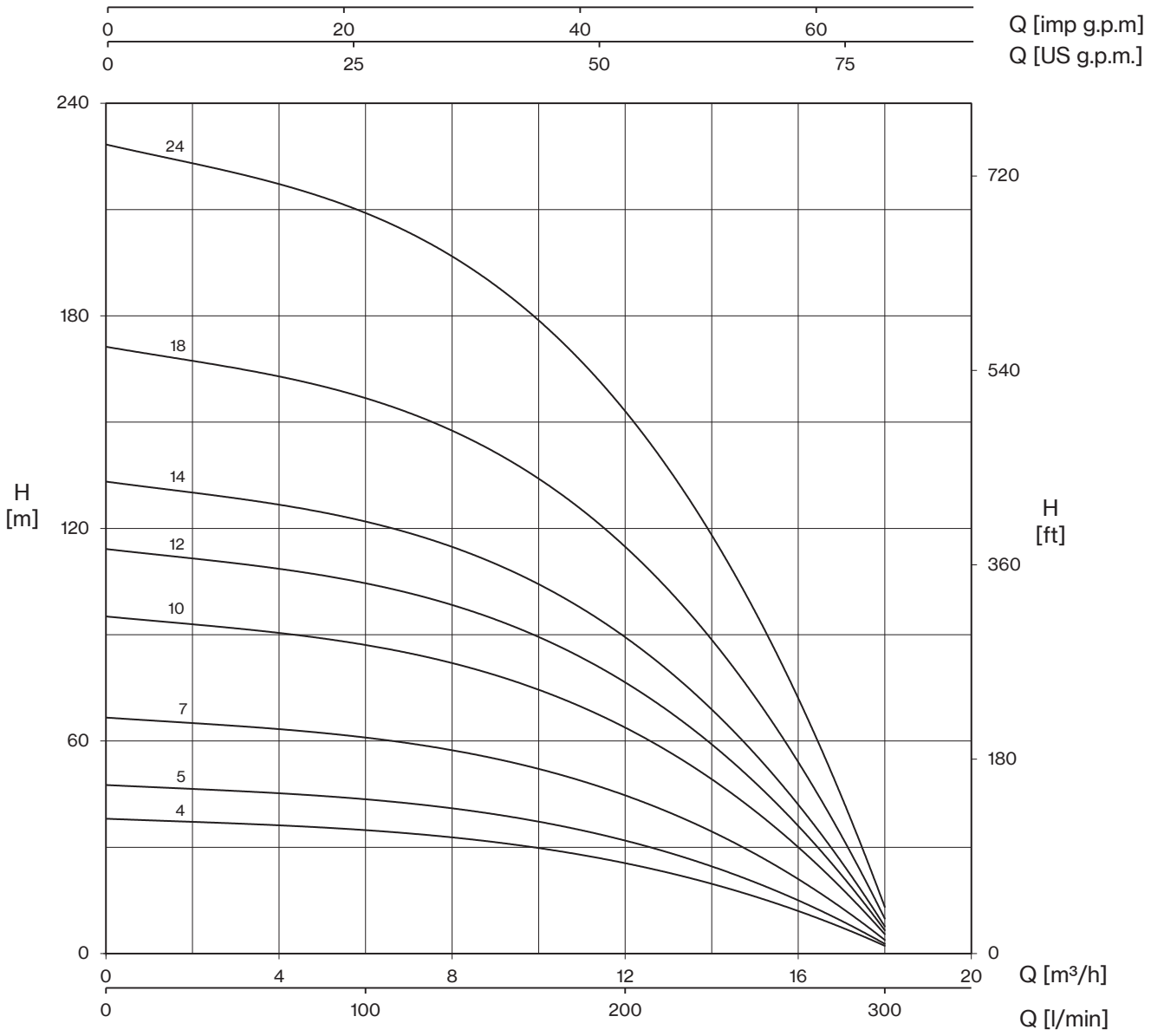
Q [imp g.p.m]
Q [US g.p.m.]
0
20
40
60
0
25
50
75
240
180
120
60
0
H
[m]
720
540
360
180
0
H
[ft]
24
18
14
12
10
7
5
4
0
4
8
12
16
20
Q [m³/h]
0
100
200
300
Q [l/min]

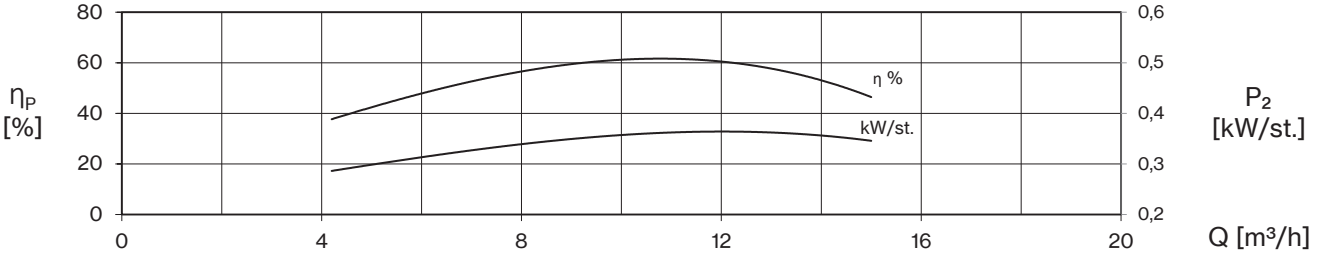
80
60
40
20
0
ηP
[%]
0,6
0,5
0,4
0,3
0,2
P2
[kW/st.]
η %
kW/st.
0
4
8
12
16
20
Q [m³/h]

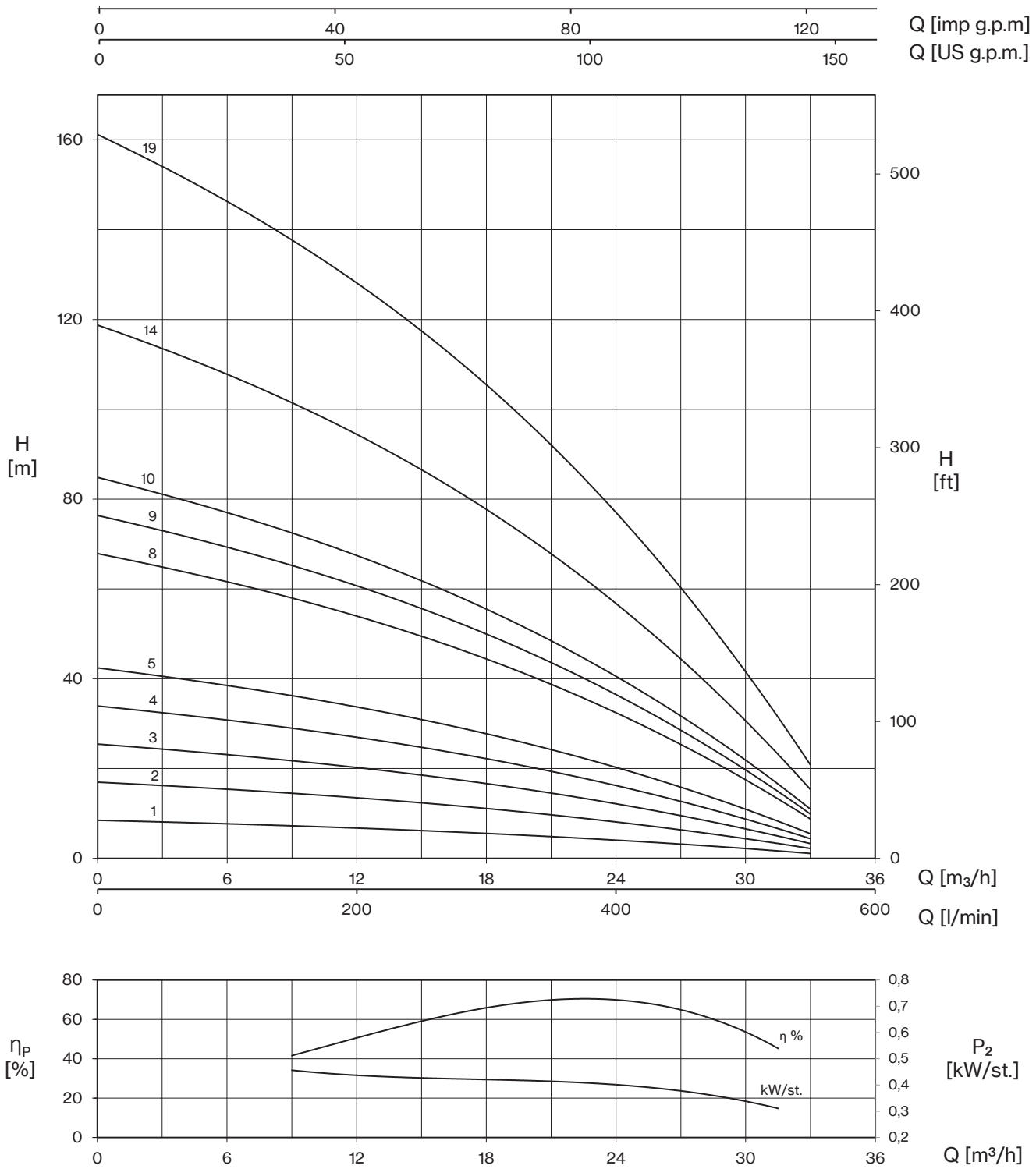
Q [imp g.p.m]
0
40
80
120
Q [US g.p.m.]
0
50
100
150
H
[m]
160
120
80
40
0
19
14
10
9
8
5
4
3
2
1
H
[ft]
500
400
300
200
100
0
0
6
12
18
24
30
36
Q [m3/h]
0
200
400
600
Q [l/min]
ηP
[%]
80
60
40
20
0
η %
kW/st.
P2
[kW/st.]
0,8
0,7
0,6
0,5
0,4
0,3
0,2
Q [m³/h]

4E

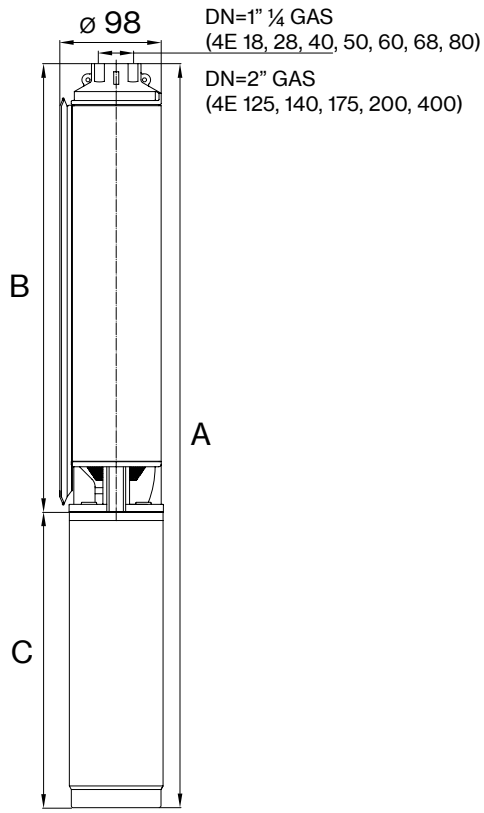

4E 28

TYPE	DIMENSIONS (mm)					WEIGHT (kg)				
	A (1~)	A (3~)	B	C (1~)	C (3~)	A (1~)	A (3~)	B	C (1~)	C (3~)
4E 28/09-05	641	641	316	325	325	10,3	9,8	3,3	7	6,5
4E 28/11-07	681	681	356	325	325	11,3	10,7	3,7	7,6	7
4E 28/15-10	786	761	436	350	325	13,3	12,2	4,6	8,7	7,6
4E 28/20-15	920	885	535	385	350	15,9	14,3	5,6	10,3	8,7
4E 28/26-20	1112	1077	692	420	385	19,3	17,7	7,3	12	10,4
4E 28/35-30	1360	1310	890	470	420	23,4	21,2	9,2	14,2	12
4E 28/46-40	-	1543	1125	-	418	-	26,1	11,9	-	14,2

4E 40

TYPE	DIMENSIONS (mm)					WEIGHT (kg)				
	A (1~)	A (3~)	B	C (1~)	C (3~)	A (1~)	A (3~)	B	C (1~)	C (3~)
4E 40/08-05	598	598	273	325	325	10	9,5	3	7	6,5
4E 40/11-07	648	648	323	325	325	11,2	10,6	3,6	7,6	7
4E 40/14-10	724	699	374	350	325	12,8	11,7	4,1	8,7	7,6
4E 40/19-15	843	808	458	385	350	15,4	13,8	5,1	10,3	8,7
4E 40/24-20	963	928	543	420	385	18,1	16,5	6,1	12	10,4
4E 40/32-30	1184	1134	714	470	420	22,2	20	8	14,2	12
4E 40/42-40	-	1300	882	-	418	-	24,1	9,9	-	14,2
4E 40/51-55	-	1539	1071	-	468	-	27,4	12,1	-	15,3
4E 40/54-55	-	1590	1122	-	468	-	28	12,7	-	15,3

4E 50

TYPE	DIMENSIONS (mm)					WEIGHT (kg)				
	A (1~)	A (3~)	B	C (1~)	C (3~)	A (1~)	A (3~)	B	C (1~)	C (3~)
4E 50/07-05	602	602	277	325	325	9,9	9,4	2,9	7	6,5
4E 50/09-07	642	642	317	325	325	10,9	10,3	3,3	7,6	7
4E 50/11-10	706	681	356	350	325	12,4	11,3	3,7	8,7	7,6
4E 50/16-15	841	806	456	385	350	15	13,4	4,7	10,3	8,7
4E 50/20-20	955	920	535	420	385	17,5	15,9	5,5	12	10,4
4E 50/28-30	1200	1150	730	470	420	21,8	19,6	7,6	14,2	12
4E 50/36-40	-	1308	890	-	418	-	23,4	9,2	-	14,2
4E 50/45-55	-	1569	1101	-	468	-	26,8	11,5	-	15,3
4E 50/48-55	-	1629	1161	-	468	-	27,4	12,1	-	15,3

4E 60

TYPE	DIMENSIONS (mm)					WEIGHT (kg)				
	A (1~)	A (3~)	B	C (1~)	C (3~)	A (1~)	A (3~)	B	C (1~)	C (3~)
4E 60/06-05	582	582	257	325	325	9,7	9,2	2,7	7	6,5
4E 60/08-07	622	622	297	325	325	10,7	10,1	3,1	7,6	7
4E 60/10-10	687	662	337	350	325	12,2	11,1	3,5	8,7	7,6
4E 60/13-15	781	746	396	385	350	14,4	12,8	4,1	10,3	8,7
4E 60/17-20	896	861	476	420	385	16,9	15,3	4,9	12	10,4
4E 60/23-30	1065	1015	595	470	420	20,3	18,1	6,1	14,2	12
4E 60/30-40	-	1188	770	-	418	-	22,2	8	-	14,2
4E 60/36-55	-	1358	890	-	468	-	24,5	9,2	-	15,3
4E 60/40-55	-	1438	970	-	468	-	25,3	10	-	15,3

4E 68

TYPE	DIMENSIONS (mm)					WEIGHT (kg)				
	A (1~)	A (3~)	B	C (1~)	C (3~)	A (1~)	A (3~)	B	C (1~)	C (3~)
4E 68/05-05	562	562	237	325	325	9,5	9	2,5	7	6,5
4E 68/06-07	582	582	257	325	325	10,3	9,7	2,7	7,6	7
4E 68/08-10	647	622	297	350	325	11,8	10,7	3,1	8,7	7,6
4E 68/11-15	741	706	356	385	350	14	12,4	3,7	10,3	8,7
4E 68/15-20	856	821	436	420	385	16,5	14,9	4,5	12	10,4
4E 68/19-30	985	935	515	470	420	19,5	17,3	5,3	14,2	12
4E 68/26-40	-	1108	690	-	418	-	21,3	7,1	-	14,2
4E 68/32-55	-	1278	810	-	468	-	23,7	8,4	-	15,3
4E 68/34-55	-	1318	850	-	468	-	24,1	8,8	-	15,3

4E 80

TYPE	DIMENSIONS (mm)					WEIGHT (kg)				
	A (1~)	A (3~)	B	C (1~)	C (3~)	A (1~)	A (3~)	B	C (1~)	C (3~)
4E 80/04-05	550	550	225	325	325	9,3	8,8	2,3	7	6,5
4E 80/05-07	572	572	247	325	325	10,1	9,5	2,5	7,6	7
4E 80/06-10	619	594	269	350	325	11,5	10,4	2,8	8,7	7,6
4E 80/09-15	720	685	335	385	350	13,7	12,1	3,4	10,3	8,7
4E 80/11-20	798	763	378	420	385	15,8	14,2	3,8	12	10,4
4E 80/15-30	936	886	466	470	420	18,9	16,7	4,7	14,2	12
4E 80/20-40	-	993	575	-	418	-	20	5,8	-	14,2
4E 80/24-55	-	1166	698	-	468	-	22,4	7,1	-	15,3
4E 80/26-55	-	1210	742	-	468	-	22,8	7,5	-	15,3
4E 80/36-75	-	1500	962	-	538	-	28,3	9,7	-	18,6
4E 80/48-100	-	2070	1260	-	810	-	39,7	12,7	-	27

4E 125

TYPE	DIMENSIONS (mm)					WEIGHT (kg)				
	A (1~)	A (3~)	B	C (1~)	C (3~)	A (1~)	A (3~)	B	C (1~)	C (3~)
4E 125/03-05	573	573	248	325	325	9,6	9,1	2,6	7	6,5
4E 125/04-07	609	609	284	325	325	10,5	9,9	2,9	7,6	7
4E 125/05-10	671	646	321	350	325	12	10,9	3,3	8,7	7,6
4E 125/07-15	779	744	394	385	350	14,2	12,6	3,9	10,3	8,7
4E 125/09-20	889	854	469	420	385	16,6	15	4,6	12	10,4

4E

4E 140

TYPE	DIMENSIONS (mm)					WEIGHT (kg)				
	A (1~)	A (3~)	B	C (1~)	C (3~)	A (1~)	A (3~)	B	C (1~)	C (3~)
4E 140/04-10	634	609	284	350	325	11,6	10,5	2,9	8,7	7,6
4E 140/06-15	743	708	358	385	350	13,9	12,3	3,6	10,3	8,7
4E 140/08-20	852	817	432	420	385	16,3	14,7	4,3	12	10,4
4E 140/11-30	1013	963	543	470	420	19,5	17,3	5,3	14,2	12
4E 140/14-40	-	1071	653	-	418	-	20,4	6,2	-	14,2
4E 140/18-55	-	1304	836	-	468	-	23	7,7	-	15,3
4E 140/20-55	-	1377	909	-	468	-	23,7	8,4	-	15,3
4E 140/26-75	-	1668	1130	-	538	-	29,2	10,6	-	18,6
4E 140/36-100	-	2308	1498	-	810	-	40,9	13,9	-	27

4E 175

TYPE	DIMENSIONS (mm)					WEIGHT (kg)				
	A (1~)	A (3~)	B	C (1~)	C (3~)	A (1~)	A (3~)	B	C (1~)	C (3~)
4E 175/02-05	542	542	217	325	325	9,3	8,8	2,3	7	6,5
4E 175/03-07	581	581	256	325	325	10,3	9,7	2,7	7,6	7
4E 175/04-10	646	621	296	350	325	11,7	10,6	3	8,7	7,6
4E 175/05-15	721	686	336	385	350	13,7	12,1	3,4	10,3	8,7
4E 175/06-20	796	761	376	420	385	15,7	14,1	3,7	12	10,4

4E 200

TYPE	DIMENSIONS (mm)					WEIGHT (kg)				
	A (1~)	A (3~)	B	C (1~)	C (3~)	A (1~)	A (3~)	B	C (1~)	C (3~)
4E 200/04-15	681	646	296	385	350	13,3	11,7	3	10,3	8,7
4E 200/05-20	756	721	336	420	385	15,4	13,8	3,4	12	10,4
4E 200/07-30	886	836	416	470	420	18,3	16,1	4,1	14,2	12
4E 200/10-40	-	954	536	-	418	-	19,4	5,2	-	14,2
4E 200/12-55	-	1084	616	-	468	-	21,2	5,9	-	15,3
4E 200/14-55	-	1163	695	-	468	-	21,9	6,6	-	15,3
4E 200/18-75	-	1428	890	-	538	-	26,7	8,1	-	18,6
4E 200/24-100	-	1938	1128	-	810	-	37,5	10,5	-	27

4E 400

TYPE	DIMENSIONS (mm)					WEIGHT (kg)				
	A (1~)	A (3~)	B	C (1~)	C (3~)	A (1~)	A (3~)	B	C (1~)	C (3~)
4E 400/01-05	528	528	203	325	325	8,5	8	1,5	7	6,5
4E 400/02-10	620	595	270	350	325	10,7	9,6	2	8,7	7,6
4E 400/03-15	722	687	337	385	350	12,9	11,3	2,6	10,3	8,7
4E 400/04-20	824	789	404	420	385	15,1	13,5	3,1	12	10,4
4E 400/05-30	941	891	471	470	420	17,8	15,6	3,6	14,2	12
4E 400/08-40	-	1089	671	-	418	-	19,4	5,2	-	14,2
4E 400/09-55	-	1206	738	-	468	-	21	5,7	-	15,3
4E 400/10-55	-	1273	805	-	468	-	21,5	6,2	-	15,3
4E 400/14-75	-	1611	1073	-	538	-	26,9	8,3	-	18,6
4E 400/19-100	-	2217	1407	-	810	-	37,9	10,9	-	27

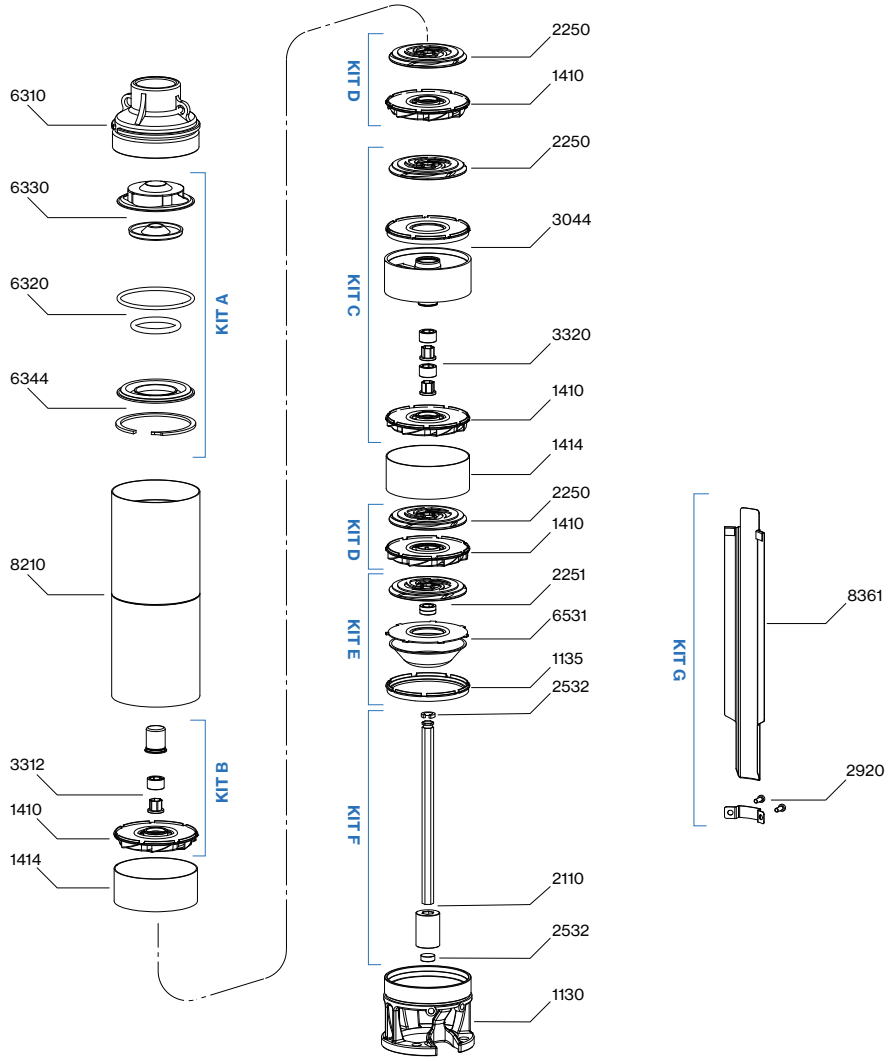

N. CODE	KIT	DESCRIPTION	MATERIAL
6320	**KIT A** *check valve*	**O-RINGS**	NBR
6330		**WING VALVE WITH COVER**	AISI 304
6340		**WING VALVE ALIGNER**	POM-C
6344		**SUPPORT WING VALVE AND SEEGER**	AISI 304
1410	**KIT B** *upper support*	**COMPLETE DIFFUSER WITH DISC**	POM-C + CERAMIC AI203 + AISI 304
3312		**SUPPORT BUSH WITH SLEEVE**	POM-C + CERAMIC AI203
2531		**SEEGER**	POM-C
1410	**KIT C** *intermediate support*	**COMPLETE DIFFUSER WITH DISC**	POM-C + CERAMIC AI203 + AISI 304
2250		**IMPELLER**	POM-C
3320		**SUPPORT BUSH WITH 2X SLEEVE**	POM-C + CERAMIC AI203
3044		**INTERMEDIATE SUPPORT**	AISI 304
1410	**KIT D** *stage*	**COMPLETE DIFFUSER WITH DISC**	POM-C + CERAMIC AI203 + AISI 304
2250		**IMPELLER**	POM-C
1135	**KIT E** *first stage*	**CENTERING RING**	POM-C
6531		**DISC AND GRID**	AISI 304
2251		**FIRST IMPELLER WITH SPACERS**	POM-C
2110	**KIT F** *shaft with coupling*	**SHAFT WITH COUPLING**	AISI 431B
2532		**SEEGER WITH SHOCK SUPPORT**	POM-C
2920	**KIT G** *cable cover*	**SCREWS**	AISI 304
8361		**CABLE COVER**	AISI 304
1130	-	**BOTTOM CASING**	AISI 304
1414		**SPACER PIPE**	AISI 304
6310		**TOP CASING**	AISI 304
8210		**EXTERNAL PIPE**	AISI 304

6E

Submersible Well Pumps

Designed for 6” wells, the 6E series is solid, durable, and engineered for easy maintenance. The discharge head and suction support are manufactured in AISI 304 stainless steel using precision lost-wax casting for maximum structural integrity.

Technical Highlights: Designed for high pressures (up to 40 bar) via series-stage assembly. Includes a 3” threaded discharge outlet with an integrated non-return valve. Standard coupling for 4” (NEMA) motors up to 7.5 HP and 6” motors from 10 HP.

Operation: Max diameter: 140 mm (including cable guard). Rotation is counterclockwise from the discharge side. Suitable for continuous duty in vertical or horizontal positions. Minimum water level: 1m above suction.

Applications: Deep well extraction (domestic/industrial), lifting systems, surface/sprinkler irrigation, water supply networks, firefighting, and pressure tank supply.

Construction features	
Suction and delivery outlet	stainless steel AISI 304
External jacket	stainless steel AISI 304L
Impellers	polyphenylene oxide
Diffusers	polyphenylene oxide and AISI 304
Support bush with sleeves	EPDM + ceramic-coated stainless steel AISI 316L
Shaft	stainless steel AISI 431B
Coupling	stainless steel AISI 316L
Quantity of sand in the water	150 g/m³
Max liquid temperature	35 °C

6E 200

60 Hz - 3500 rpm								Q									
TYPE	P2		AXIAL LOAD	SUITABLE MOTOR			l/min	0	100	125	150	175	200	225	250	275	300
				SIZE	3~ 380V	3~ 220V	l/sec	0	1,67	2,08	2,50	2,92	3,33	3,75	4,17	4,58	5,00
	HP	kW	N		A	A	m³/h	0	6,0	7,5	9,0	10,5	12,0	13,5	15,0	16,5	18,0
6E 200/03-30	3	2,2	550	4" NEMA	6,4	11	H (m)	69	60	57	54	50	46	41	36	29	21
6E 200/04-40	4	3	730		8,3	14,8		91	80	76	72	67	62	55	47	38	28
6E 200/05-55	5,5	3,7	920		9,6	17,1		114	100	95	90	84	77	69	59	48	35
6E 200/06-55	5,5	4	1100		9,6	17,1		137	119	114	108	101	93	83	71	58	42
6E 200/08-75	7,5	5,5	1460		13,6	25		183	159	152	144	135	123	110	95	77	56
6E 200/11-100	10	7,5	2010	6" NEMA	17,4	29		251	219	209	198	185	170	151	130	106	77
6E 200/13-125	12,5	9,2	2370		20,2	35		297	259	247	234	219	200	179	154	125	91
6E 200/16-150	15	11	2920		25,6	39,8		366	318	304	288	269	247	220	189	154	112
6E 200/19-175	17,5	13	3470		27,5	47		434	378	361	343	320	293	261	225	182	133
6E 200/22-200	20	15	4010		34,1	54,5		503	438	418	397	370	339	303	260	211	154
6E 200/27-250	25	18,5	4920		39,8	67,5		617	537	513	487	454	416	372	320	259	189
6E 200/32-300	30	22	5840		47,3	80,2		732	637	608	577	539	493	440	379	307	224
6E 200/37-400	40	30	6750		66,2	115		846	736	703	667	623	571	509	438	355	259

Max Eff. % =	66,6
Max kW / St. =	0,798

Q (flow) =	25%	50%	75%	100%
NPSH (m)	1,0	1,3	2,0	3,3

6E 250

60 Hz - 3500 rpm								Q									
TYPE	P2		AXIAL LOAD	SUITABLE MOTOR			l/min	0	150	175	200	225	250	275	300	350	400
				SIZE	3~ 380V	3~ 220V	l/sec	0	2,50	2,92	3,33	3,75	4,17	4,58	5,00	5,83	6,67
	HP	kW	N		A	A	m³/h	0	9,0	10,5	12,0	13,5	15,0	16,5	18,0	21,0	24,0
6E 250/02-30	3	2,2	370	4" NEMA	6,4	11	H (m)	46	43	41	40	38	36	33	29	21	12
6E 250/03-40	4	3	550		8,3	14,8		69	64	62	60	57	53	49	44	32	17
6E 250/04-55	5,5	4	740		9,6	17,1		92	85	83	80	76	71	66	59	43	23
6E 250/05-75	7,5	5,5	920		13,6	25		115	107	104	100	95	89	82	74	54	29
6E 250/07-100	10	7,5	1290	6" NEMA	17,4	29		161	149	145	139	133	125	115	103	75	40
6E 250/09-125	12,5	9,2	1650		20,2	35		207	192	186	179	171	160	147	132	96	52
6E 250/11-150	15	11	2020		25,6	39,8		253	235	228	219	208	196	180	162	118	63
6E 250/13-175	17,5	13	2390		27,5	47		299	277	269	259	246	231	213	191	139	75
6E 250/15-200	20	15	2750		34,1	54,5		345	320	311	299	284	267	246	221	161	86
6E 250/18-250	25	18,5	3300		39,8	67,5		414	384	373	359	341	320	295	265	193	104
6E 250/22-300	30	22	4040		47,3	80,2		506	469	455	438	417	392	360	324	236	127
6E 250/25-400	40	30	4590		66,2	115		575	533	518	498	474	445	410	368	268	144
6E 250/28-400	40	30	5140		66,2	115		644	597	580	558	531	498	459	412	300	161
6E 250/30-400	40	30	5500		66,2	115		690	640	621	598	569	534	491	442	322	173
6E 250/33-500	50	37	6050		84,5	-		759	704	683	657	625	587	541	486	354	190
6E 250/36-500	50	37	6600		84,5	-		828	768	745	717	682	641	590	530	386	207

Max Eff. % =	65,8
Max kW / St. =	1,190

Q (flow) =	25%	50%	75%	100%
NPSH (m)	1,0	1,3	2,5	6,0

6E

6E 450

60 Hz - 3500 rpm								Q													
TYPE	P2		AXIAL LOAD	SUITABLE MOTOR			l/min	0	200	225	250	275	300	350	400	450	500	550	600	650	700
				SIZE	3~ 380V	3~ 220V	l/sec	0	3,33	3,75	4,17	4,58	5,00	5,83	6,67	7,50	8,33	9,17	10,00	10,83	11,67
	HP	kW	N		A	A	m³/h	0	12,0	13,5	15,0	16,5	18,0	21,0	24,0	27,0	30,0	33,0	36,0	39,0	42,0
6E 450/02-40	4	3	330	4" NEMA	8,3	14,8	H (m)	41	36	35	34	33	32	29	27	24	21	18	14	10	6
6E 450/03-55	5,5	3,7	490		9,6	17,1		61	54	52	51	49	48	44	40	36	32	27	21	16	10
6E 450/04-75	7,5	5,5	660		13,6	25		82	71	70	68	66	64	59	54	48	42	36	28	21	13
6E 450/05-100	10	7,5	980		17,4	29		122	107	104	102	98	95	88	80	72	63	53	43	31	19
6E 450/08-125	12,5	9,2	1310	6" NEMA	20,2	35		163	143	139	135	131	127	118	107	96	84	71	57	42	26
6E 450/09-150	15	11	1470		25,6	39,8		184	161	157	152	148	143	132	121	108	95	80	64	47	29
6E 450/11-175	17,5	13	1790		27,5	47		224	196	191	186	180	175	162	147	132	116	98	78	57	35
6E 450/13-200	20	15	2120		34,1	54,5		265	232	226	220	213	206	191	174	156	137	116	92	68	42
6E 450/16-250	25	18,5	2610		39,8	67,5		326	286	278	271	262	254	235	214	192	168	142	114	83	51
6E 450/19-300	30	22	3090		47,3	80,2		388	339	330	321	312	302	279	255	228	200	169	135	99	61
6E 450/22-400	40	30	3580		66,2	115		449	393	383	372	361	349	324	295	264	231	196	156	114	70
6E 450/26-400	40	30	4230		66,2	115		530	464	452	440	426	413	382	348	312	274	231	185	135	83
6E 450/28-500	50	37	4560		84,5	-		571	500	487	474	459	445	412	375	336	295	249	199	146	90
6E 450/32-500	50	37	5210		84,5	-		653	572	556	541	525	508	471	429	384	337	285	227	166	102

Max Eff. % =	69,7
Max kW / St. =	1,350

Q (flow) =	25%	50%	75%	100%
NPSH (m)	1,3	1,6	2,0	4,0

6E 500

60 Hz - 3500 rpm								Q													
TYPE	P2		AXIAL LOAD	SUITABLE MOTOR			l/min	0	225	250	275	300	350	400	450	500	550	600	650	700	750
				SIZE	3~ 380V	3~ 220V	l/sec	0	3,75	4,17	4,58	5,00	5,83	6,67	7,50	8,33	9,17	10,00	10,83	11,67	12,50
	HP	kW	N		A	A	m³/h	0	13,5	15,0	16,5	18,0	21,0	24,0	27,0	30,0	33,0	36,0	39,0	42,0	45,0
6E 500/02-40	4	3	360	4" NEMA	8,3	14,8		45	39	38	37	36	34	32	29	26	23	19	15	11	6
6E 500/03-75	7,5	5,5	540		13,6	25		67	58	57	56	55	52	48	44	39	34	29	23	16	9
6E 500/05-100	10	7,5	890	6" NEMA	17,4	29		112	97	95	93	91	86	80	74	66	57	48	38	27	15
6E 500/06-125	12,5	9,2	1070		20,2	35		134	117	114	112	109	103	96	88	79	69	58	45	32	18
6E 500/07-150	15	11	1250		25,6	39,8		156	136	133	130	127	120	112	103	92	80	67	53	38	21
6E 500/09-175	17,5	13	1600		27,5	47		201	175	171	168	164	155	144	132	118	103	86	68	49	27
6E 500/10-200	20	15	1780		34,1	54,5		223	195	191	186	182	172	161	147	132	115	96	76	54	30
6E 500/12-250	25	18,5	2140		39,8	67,5		268	233	229	224	218	206	193	176	158	137	115	91	65	36
6E 500/15-300	30	22	2670		47,3	80,2		335	292	286	279	273	258	241	221	197	172	144	113	81	45
6E 500/18-400	40	30	3200		66,2	115		401	350	343	335	328	310	289	265	237	206	173	136	97	54
6E 500/20-400	40	30	3560		66,2	115		446	389	381	373	364	344	321	294	263	229	192	151	108	60
6E 500/23-500	50	37	4090		84,5	-		513	447	438	428	419	396	369	338	302	263	221	174	124	69
6E 500/25-500	50	37	4450		84,5	-		558	486	476	466	455	430	401	368	329	286	240	189	135	75

Max Eff. % =	68,8
Max kW / St. =	1,660

Q (flow) =	25%	50%	75%	100%
NPSH (m)	1,3	1,5	1,9	4,0

Tolerances according to UNI ISO 9906 grade 3B

6E 650

60 Hz - 3500 rpm								Q													
TYPE	P2		AXIAL LOAD	SUITABLE MOTOR			l/min	0	300	400	450	500	550	600	650	700	750	800	850	900	1000
				SIZE	3~ 380V	3~ 220V	l/sec	0	5,00	6,67	7,50	8,33	9,17	10,00	10,83	11,67	12,50	13,33	14,17	15,00	16,67
	HP	kW	N		A	A	m³/h	0	18,0	24,0	27,0	30,0	33,0	36,0	39,0	42,0	45,0	48,0	51,0	54,0	60,0
6E 650/01-30	3	2,2	180	4" NEMA	6,4	11	H (m)	22	21	20	19	18	18	17	15	14	13	11	9	7	3
6E 650/02-75	7,5	5,5	360		13,6	25		45	41	39	38	37	35	33	31	28	25	22	18	14	5
6E 650/03-100	10	7,5	540	6" NEMA	17,4	29		67	62	59	57	55	53	50	46	42	38	32	27	21	8
6E 650/04-125	12,5	9,2	720		20,2	35		89	82	78	76	73	70	66	61	56	50	43	36	28	10
6E 650/05-150	15	11	890		25,6	39,8		112	103	98	95	92	88	83	77	70	63	54	45	35	13
6E 650/06-175	17,5	13	1070		27,5	47		134	123	118	114	110	105	99	92	84	75	65	53	42	15
6E 650/07-200	20	15	1250		34,1	54,5		156	144	137	133	128	123	116	107	98	88	76	62	49	18
6E 650/08-250	25	18,5	1430		39,8	67,5		178	164	157	152	146	140	132	123	112	100	86	71	56	20
6E 650/10-300	30	22	1780		47,3	80,2		223	205	196	190	183	175	165	154	140	125	108	89	70	25
6E 650/13-400	40	30	2320		66,2	115		290	267	255	247	238	228	215	200	182	163	140	116	91	33
6E 650/15-500	50	37	2670		84,5	-		335	308	294	285	275	263	248	230	210	188	162	134	105	38
6E 650/17-500	50	37	3030		84,5	-		379	349	333	323	311	298	281	261	238	213	184	151	119	43

Max Eff. % =	67,1
Max kW / St. =	2,55

Q (flow) =	25%	50%	75%	100%
NPSH (m)	2,0	2,4	2,9	6,8

6E 800

60 Hz - 3500 rpm								Q													
TYPE	P2		AXIAL LOAD	SUITABLE MOTOR			l/min	0	500	600	650	700	750	800	850	900	950	1000	1050	1100	1200
				SIZE	3~ 380V	3~ 220V	l/sec	0	8,33	10,00	10,83	11,67	12,50	13,33	14,17	15,00	15,83	16,67	17,50	18,33	20,00
	HP	kW	N		A	A	m³/h	0	30,0	36,0	39,0	42,0	45,0	48,0	51,0	54,0	57,0	60,0	63,0	66,0	72,0
6E 800/01-40	4	3	150	4" NEMA	8,3	14,8		19	17	15	14	13	12	12	11	10	10	9	8	7	5
6E 800/02-75	7,5	5,5	300		13,6	25		37	33	30	28	26	25	23	22	20	19	18	16	15	10
6E 800/03-100	10	7,5	450	6" NEMA	17,4	29		56	50	45	42	39	37	35	33	31	29	27	25	22	14
6E 800/04-150	15	11	600		25,6	39,8		75	66	60	57	53	49	46	43	41	38	36	33	29	19
6E 800/05-175	17,5	13	750		27,5	47		94	83	76	71	66	61	58	54	51	48	45	41	37	24
6E 800/06-200	20	15	900		34,1	54,5		112	99	91	85	79	74	69	65	61	57	53	49	44	29
6E 800/07-250	25	18,5	1050		39,8	67,5		131	116	106	99	92	86	81	76	71	67	62	57	51	33
6E 800/09-300	30	22	1350		47,3	80,2		168	149	136	127	118	110	104	98	92	86	80	74	66	43
6E 800/12-400	40	30	1790		66,2	115		224	198	181	170	158	147	138	130	122	115	107	98	88	57
6E 800/15-500	50	37	2240		84,5	-		281	248	227	212	197	184	173	163	153	143	134	123	110	72

Max Eff. % =	56,7
Max kW / St. =	2,900

Q (flow) =	25%	50%	75%	100%
NPSH (m)	1,2	1,5	2,1	5,0

6E 200

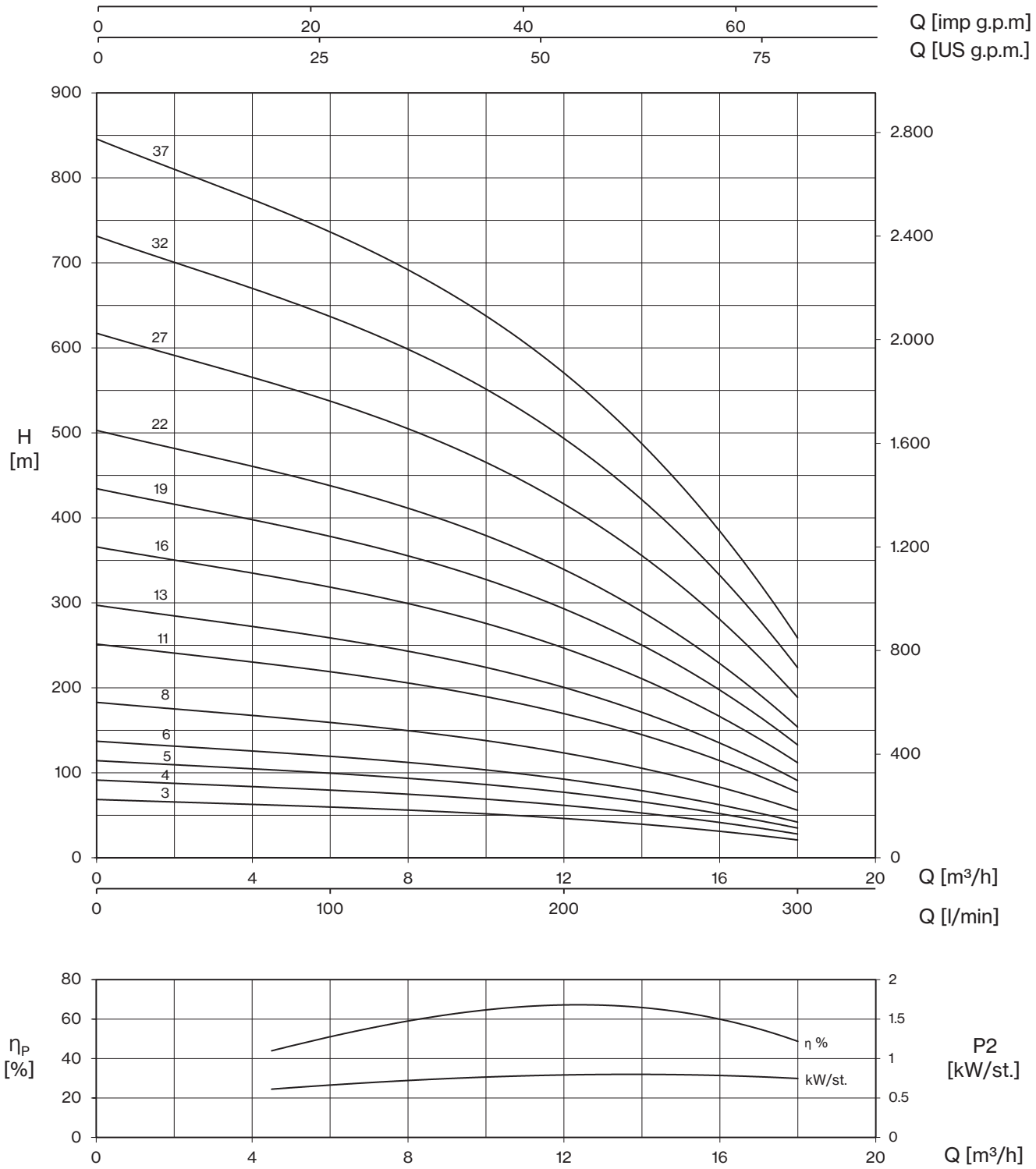
Q [imp g.p.m]
Q [US g.p.m.]
H [m]
37
32
27
22
19
16
13
11
8
6
5
4
3
Q [m³/h]
Q [l/min]
ηP [%]
η %
kW/st.
P2 [kW/st.]
Q [m³/h]

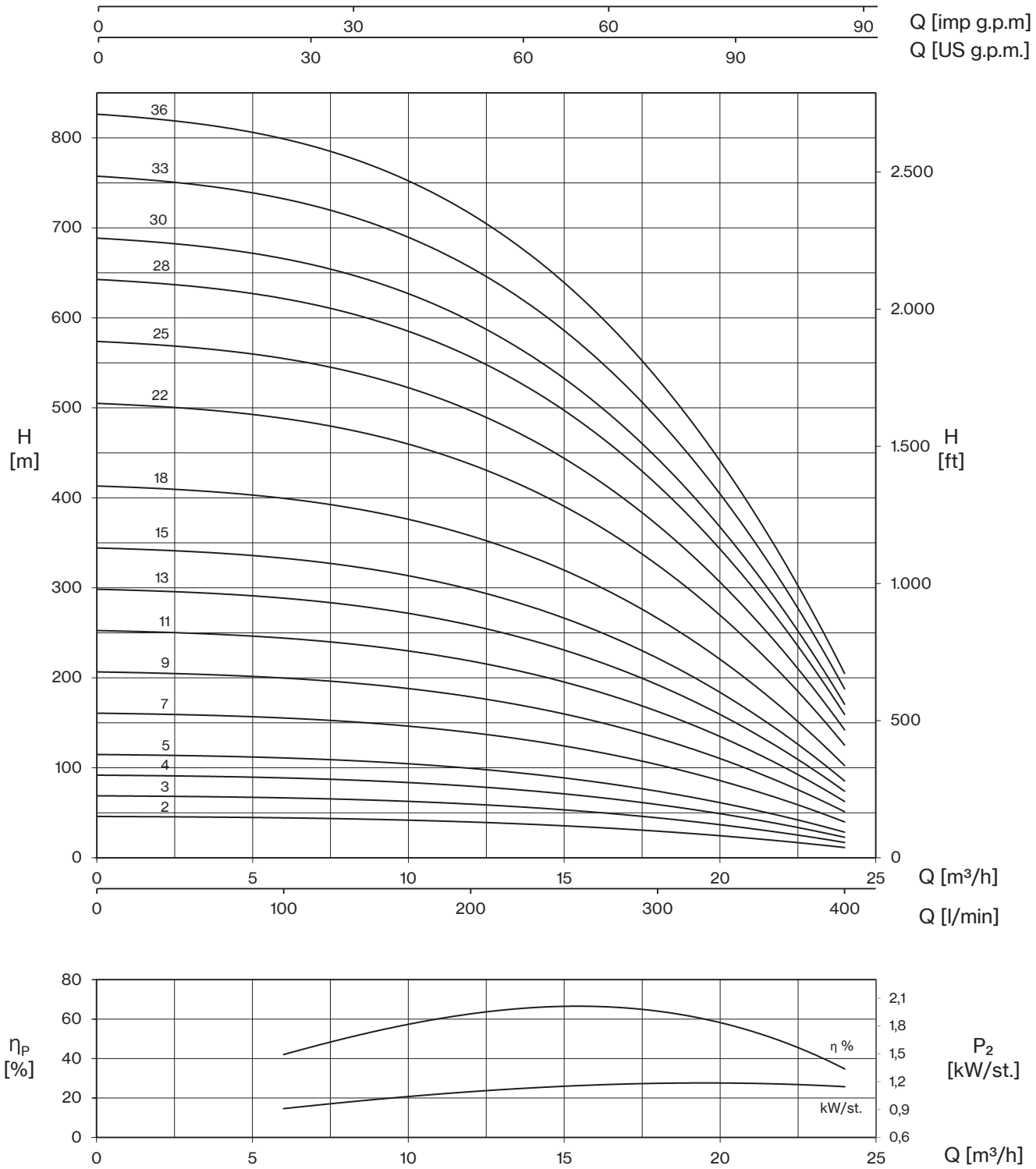
Q [imp g.p.m]
Q [US g.p.m.]
H [m]
H [ft]
Q [m³/h]
Q [l/min]
36
33
30
28
25
22
18
15
13
11
9
7
5
4
3
2
η %
kW/st.
ηP [%]
P2 [kW/st.]
Q [m³/h]

6E 450

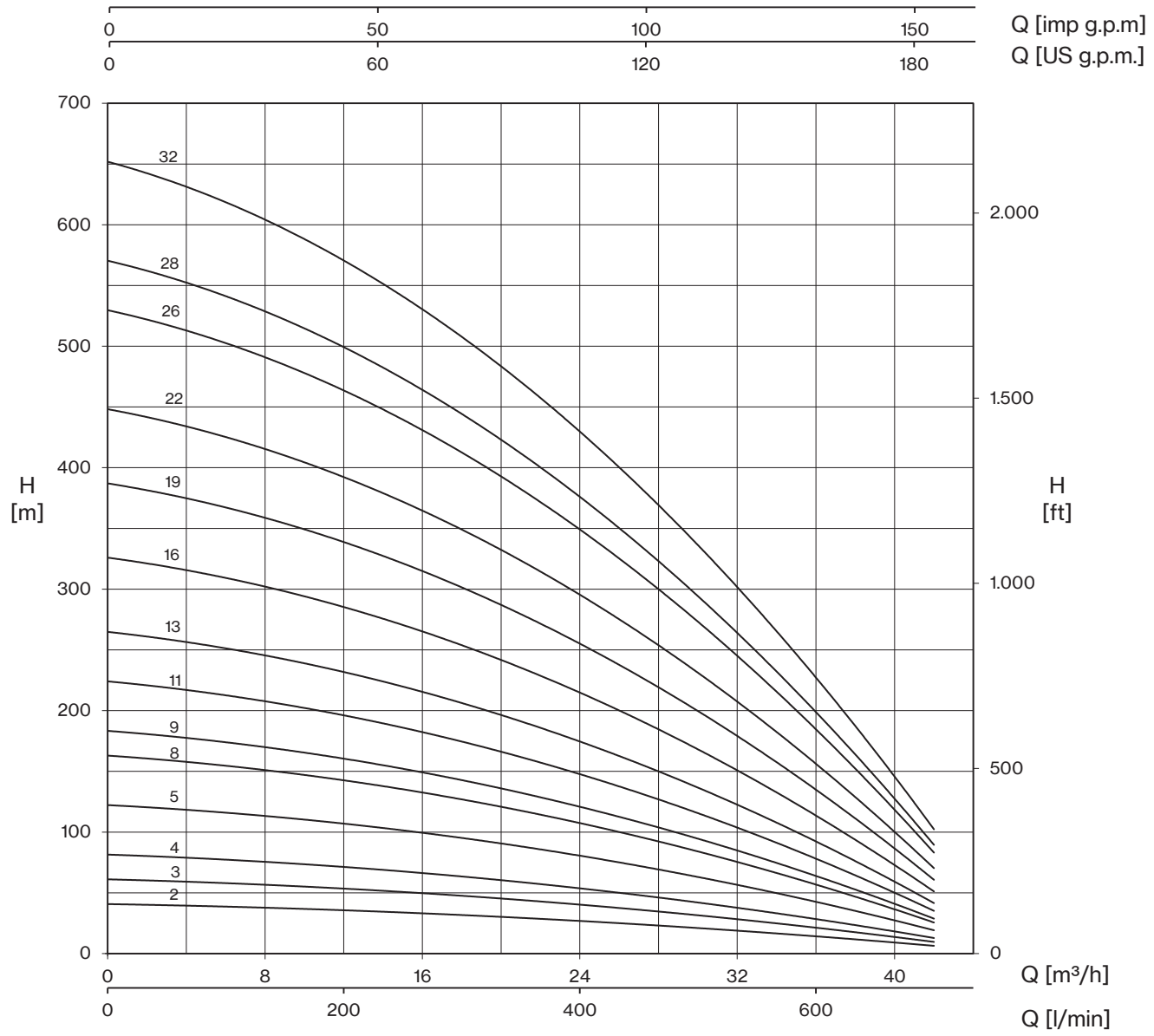
Q [imp g.p.m]
0
50
100
150
Q [US g.p.m.]
0
60
120
180
H
[m]
700
600
500
400
300
200
100
0
32
28
26
22
19
16
13
11
9
8
5
4
3
2
H
[ft]
2.000
1.500
1.000
500
0
0
8
16
24
32
40
Q [m³/h]
0
200
400
600
Q [l/min]

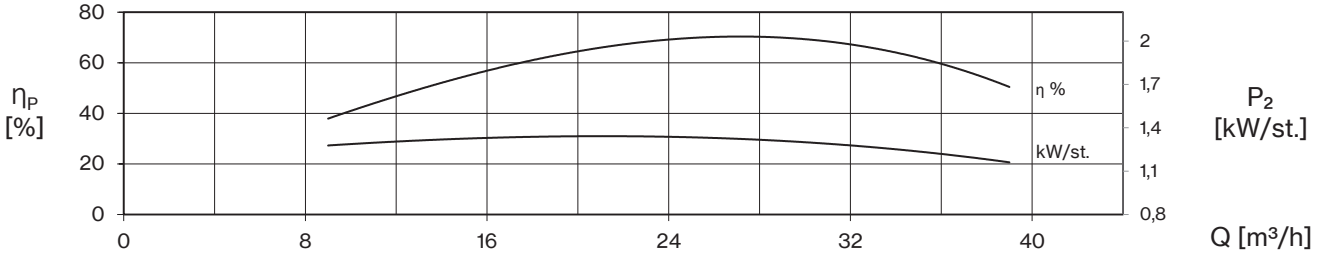
ηP
[%]
80
60
40
20
0
η %
kW/st.
P2
[kW/st.]
2
1,7
1,4
1,1
0,8
0
8
16
24
32
40
Q [m³/h]

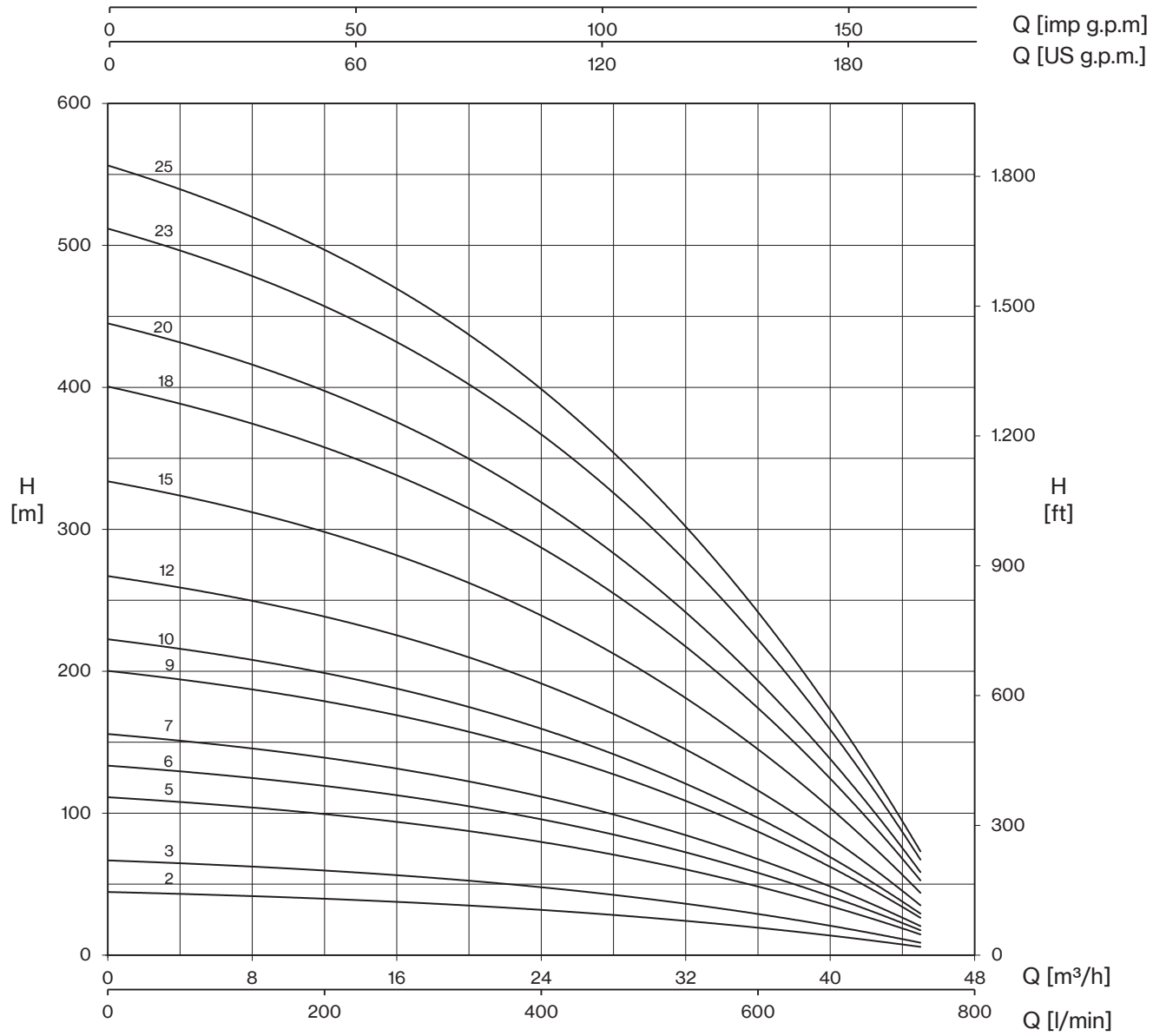
Q [imp g.p.m]
0
50
100
150
Q [US g.p.m.]
0
60
120
180
H
[m]
600
500
400
300
200
100
0
H
[ft]
1.800
1.500
1.200
900
600
300
0
25
23
20
18
15
12
10
9
7
6
5
3
2
0
8
16
24
32
40
48
Q [m³/h]
0
200
400
600
800
Q [l/min]

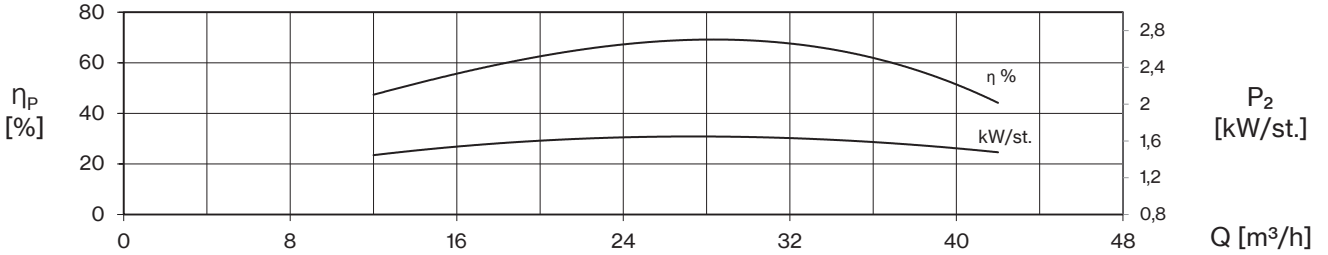
ηP
[%]
80
60
40
20
0
η %
kW/st.
P2
[kW/st.]
2,8
2,4
2
1,6
1,2
0,8
0
8
16
24
32
40
48
Q [m³/h]

6E 650

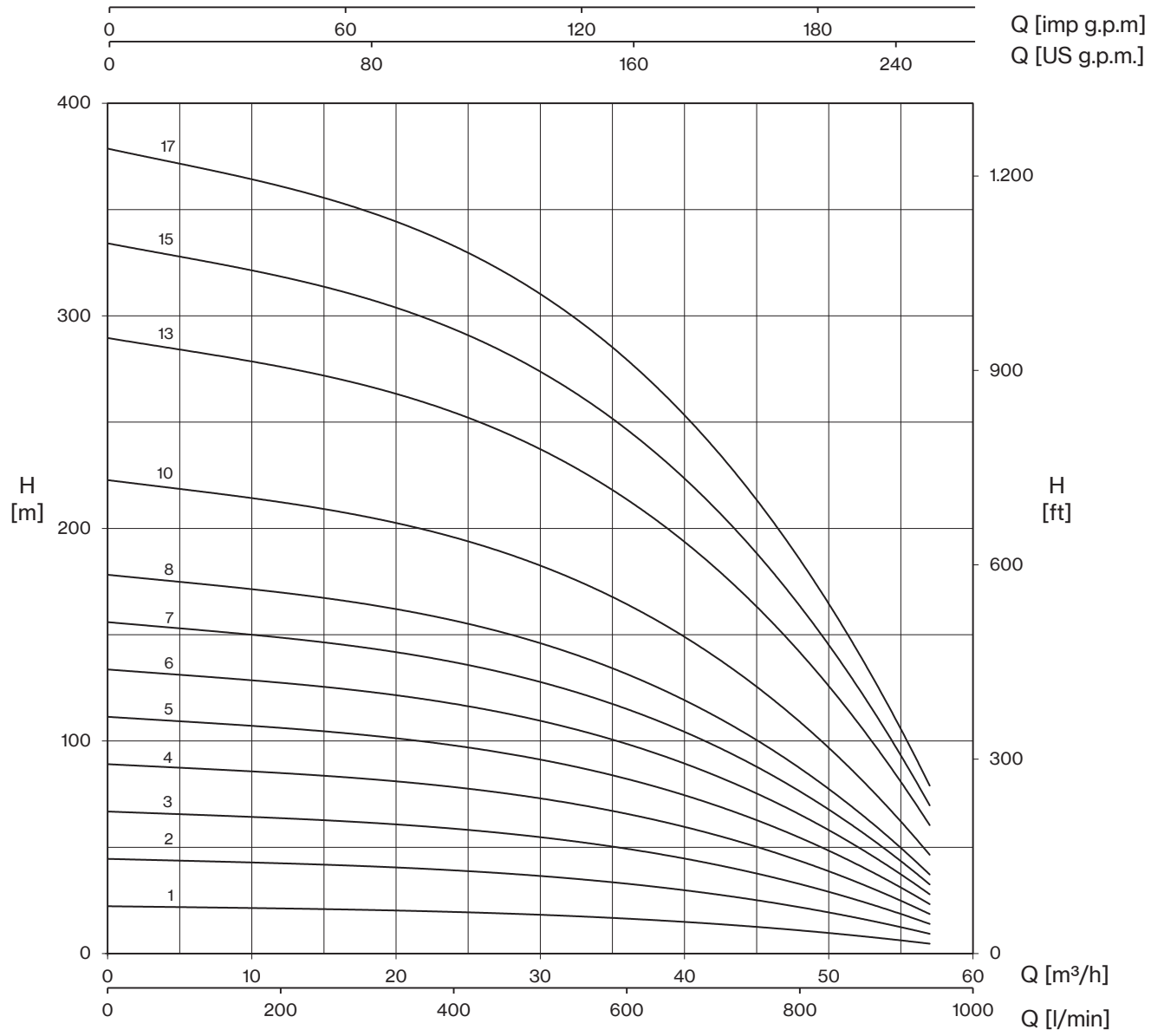
Q [imp g.p.m]
Q [US g.p.m.]
H [m]
H [ft]
Q [m³/h]
Q [l/min]
17
15
13
10
8
7
6
5
4
3
2
1

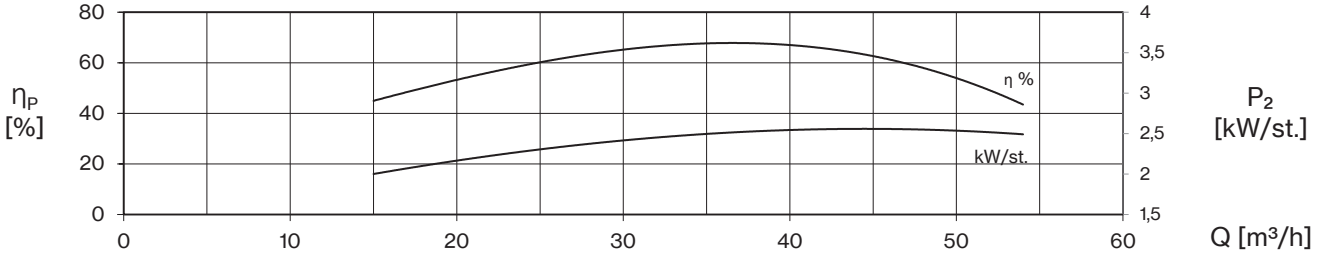
ηP [%]
P2 [kW/st.]
Q [m³/h]
η %
kW/st.

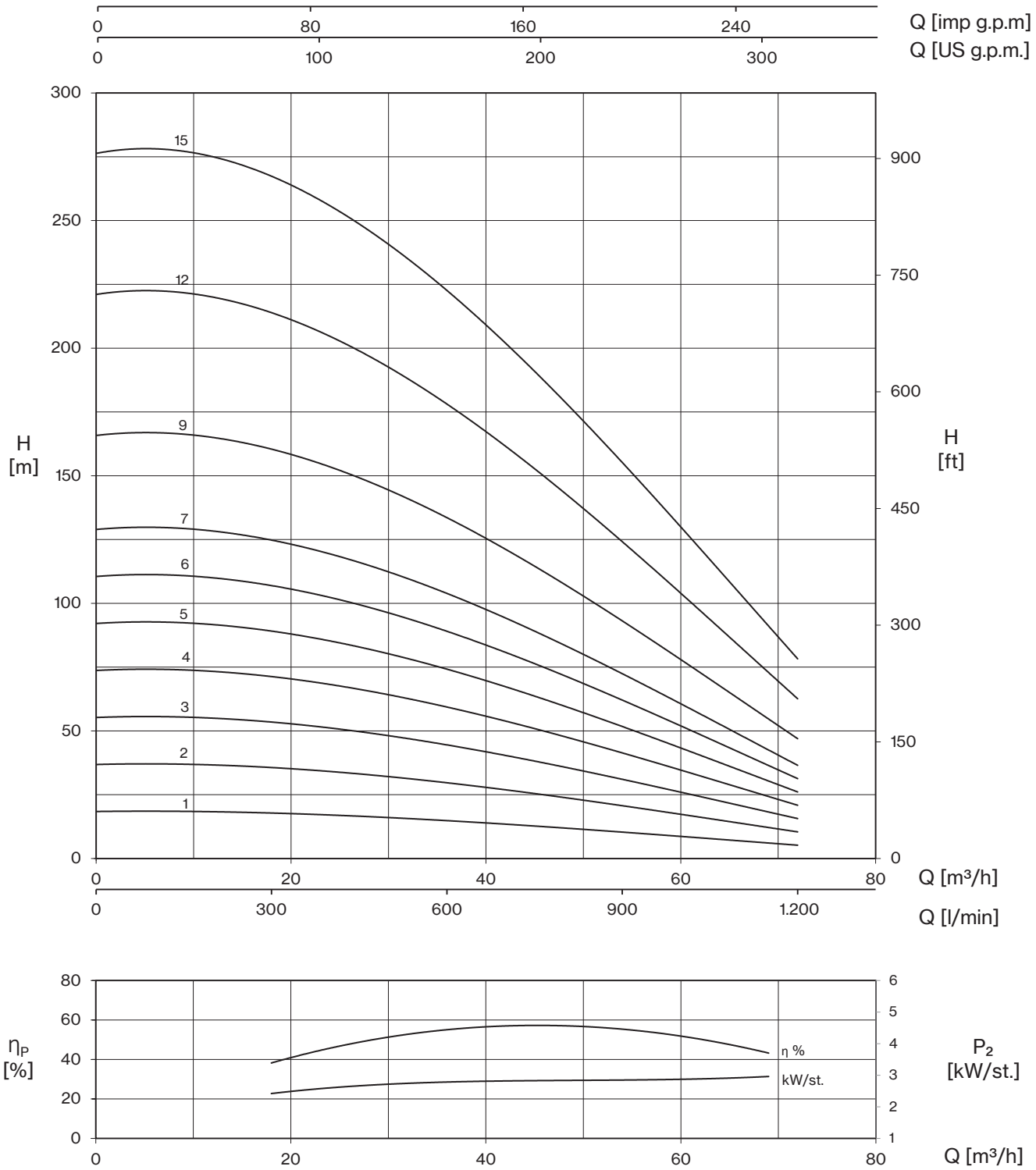
Q [imp g.p.m]
Q [US g.p.m.]
H [m]
H [ft]
Q [m³/h]
Q [l/min]
15
12
9
7
6
5
4
3
2
1
ηP [%]
P2 [kW/st.]
η %
kW/st.
Q [m³/h]

6E

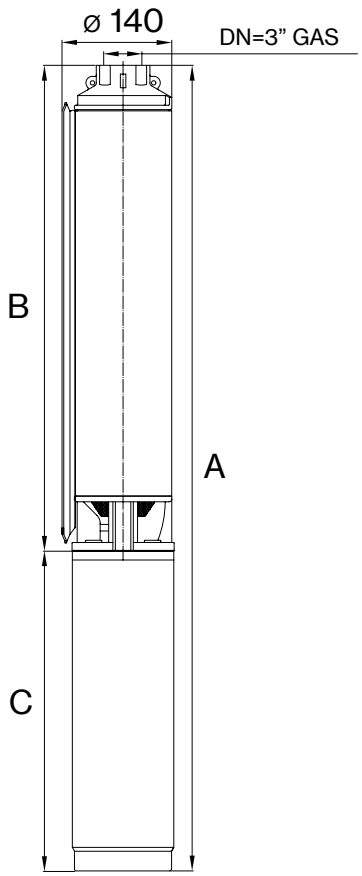

6E 200

TYPE 3~	SUITABLE MOTOR	DIMENSIONS (mm)			WEIGHT (kg)		
		A	B	C	A	B	C
6E 200/03-30-4	4" NEMA	821	401	420	19,6	7,6	12
6E 200/04-40-4		857	439	418	21,1	8,3	12,8
6E 200/05-55-4		946	478	468	24,2	8,9	15,3
6E 200/06-55-4		984	516	468	24,8	9,5	15,3
6E 200/08-75-4		1130	592	538	29,4	10,8	18,6
6E 200/11-100	6" NEMA	1306	706	600	54,7	12,7	42
6E 200/13-125		1398	798	600	58,9	13,9	45
6E 200/16-150		1612	912	700	65,6	17,6	48
6E 200/19-175		1726	1026	700	69,6	19,6	50
6E 200/22-200*		2099	1339	760	82,6	28,6	54
6E 200/27-250*		2359	1529	830	97,3	32,3	65
6E 200/32-300*		2610	1720	890	105,9	35,9	70
6E 200/37-400*		2940	1910	1030	129,5	39,5	90

** High pressure pump supplied in blocks*

6E 250

TYPE 3~	SUITABLE MOTOR	DIMENSIONS (mm)			WEIGHT (kg)		
		A	B	C	A	B	C
6E 250/02-30-4	4" NEMA	783	363	420	19	7	12
6E 250/03-40-4		819	401	418	20,4	7,6	12,8
6E 250/04-55-4		907	439	468	23,6	8,3	15,3
6E 250/05-75-4		1016	478	538	27,4	8,8	18,6
6E 250/07-100	6" NEMA	1154	554	600	52,1	10,1	42
6E 250/09-125		1230	630	600	56,4	11,4	45
6E 250/11-150		1406	706	700	60,6	12,6	48
6E 250/13-175		1498	798	700	63,9	13,9	50
6E 250/15-200		1634	874	760	70,9	16,9	54
6E 250/18-250		1818	988	830	83,9	18,9	65
6E 250/22-300*		2229	1339	890	98,5	28,5	70
6E 250/25-400*		2483	1453	1030	120,7	30,7	90
6E 250/28-400*		2597	1567	1030	122,8	32,8	90
6E 250/30-400*		2673	1643	1030	124,3	34,3	90
6E 250/33-500*		2928	1758	1170	137,4	36,4	101
6E 250/36-500*		3042	1872	1170	139,6	38,6	101

** High pressure pump supplied in blocks*

6E 450

TYPE 3~	SUITABLE MOTOR	DIMENSIONS (mm)			WEIGHT (kg)		
		A	B	C	A	B	C
6E 450/02-40-4	4" NEMA	819	401	418	20,2	7,4	12,8
6E 450/03-55-4		928	460	468	23,6	8,3	15,3
6E 450/04-75-4		1054	516	538	27,8	9,2	18,6
6E 450/05-100		1230	630	600	52,9	10,9	42
6E 450/08-125	6" NEMA	1344	744	600	57,6	12,6	45
6E 450/09-150		1500	800	700	61,5	13,5	48
6E 450/11-175		1614	914	700	65,2	15,2	50
6E 450/13-200		1789	1029	760	71	17	54
6E 450/16-250		2044	1214	830	86,5	21,5	65
6E 450/19-300		2328	1438	890	95	25	70
6E 450/22-400*		2788	1758	1030	124,6	34,6	90
6E 450/26-400*		3016	1986	1030	128,7	38,7	90
6E 450/28-500*		3271	2101	1170	141,7	40,7	101
6E 450/32-500*		3497	2327	1170	145,7	44,7	101

** High pressure pump supplied in blocks*

6E 500

TYPE 3~	SUITABLE MOTOR	DIMENSIONS (mm)			WEIGHT (kg)		
		A	B	C	A	B	C
6E 500/02-40-4	4" NEMA	819	401	418	20,2	7,4	12,8
6E 500/03-75-4		998	460	538	26,9	8,3	18,6
6E 500/05-100	6" NEMA	1174	574	600	52,1	10,1	42
6E 500/06-125		1230	630	600	55,9	10,9	45
6E 500/07-150		1388	688	700	59,7	11,7	48
6E 500/09-175		1500	800	700	63,5	13,5	50
6E 500/10-200		1619	859	760	68,4	14,4	54
6E 500/12-250		1803	973	830	81,1	16,1	65
6E 500/15-300		2048	1158	890	90,6	20,6	70
6E 500/18-400*		2559	1529	1030	120,7	30,7	90
6E 500/20-400*		2673	1643	1030	122,7	32,7	90
6E 500/23-500*		2984	1814	1170	136,7	35,7	101
6E 500/25-500*		3098	1928	1170	138,7	37,7	101

** High pressure pump supplied in blocks*

6E 650

TYPE 3~	SUITABLE MOTOR	DIMENSIONS (mm)			WEIGHT (kg)		
		A	B	C	A	B	C
6E 650/01-30-4	4" NEMA	768	348	420	18,6	6,6	12
6E 650/02-75-4		947	409	538	26,1	7,5	18,6
6E 650/03-100	6" NEMA	1067	467	600	50,4	8,4	42
6E 650/04-125		1128	528	600	54,3	9,3	45
6E 650/05-150		1289	589	700	58,3	10,3	48
6E 650/06-175		1348	648	700	61,2	11,2	50
6E 650/07-200		1469	709	760	66,1	12,1	54
6E 650/08-250		1597	767	830	77,9	12,9	65
6E 650/10-300		1779	889	890	84,7	14,7	70
6E 650/13-400		2112	1082	1030	109,4	19,4	90
6E 650/15-500		2359	1189	1170	124,1	23,1	101
6E 650/17-500		2531	1361	1170	127,1	26,1	101

6E 800

TYPE 3~	SUITABLE MOTOR	DIMENSIONS (mm)			WEIGHT (kg)		
		A	B	C	A	B	C
6E 800/01-40-4	4" NEMA	766	348	418	19,4	6,6	12,8
6E 800/02-75-4		947	409	538	26,1	7,5	18,6
6E 800/03-100	6" NEMA	1067	467	600	50,4	8,4	42
6E 800/04-150		1228	528	700	57,3	9,3	48
6E 800/05-175		1289	589	700	60,2	10,2	50
6E 800/06-200		1408	648	760	65,1	11,1	54
6E 800/07-250		1539	709	830	77	12	65
6E 800/09-300		1718	828	890	83,7	13,7	70
6E 800/12-400		2038	1008	1030	106,4	16,4	90
6E 800/15-500		2374	1204	1170	124	23	101

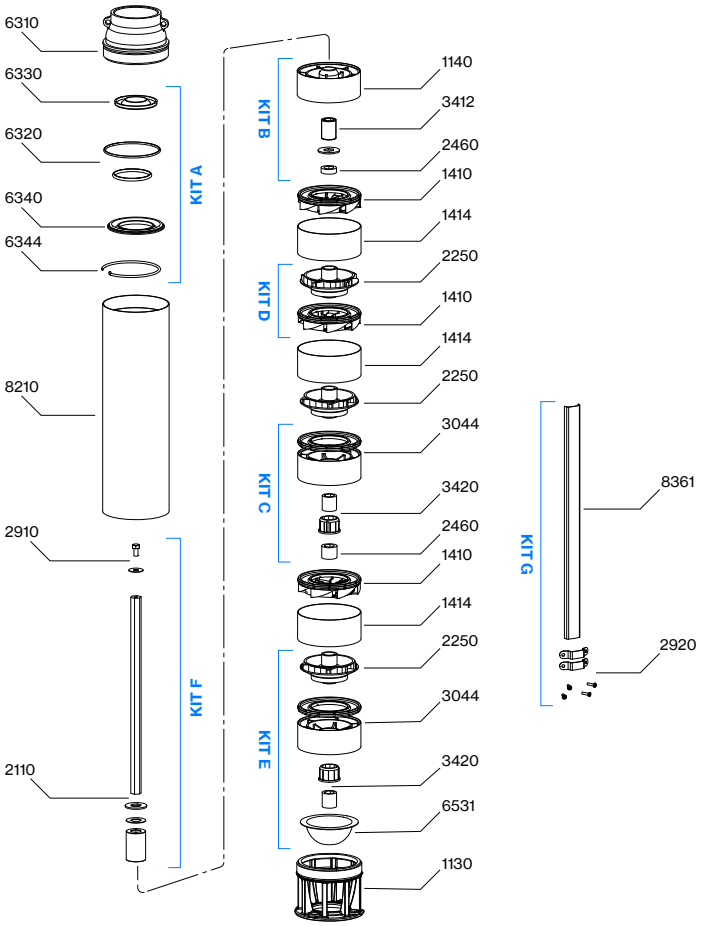

N. CODE	KIT	DESCRIPTION	MATERIAL
6320	**KIT A** *check valve*	**O-RINGS**	NBR
6330		**WING VALVE**	AISI 304
6340		**WING VALVE SUPPORT**	AISI 304
6344		**SEEGER**	AISI 304
1140	**KIT B** *upper support*	**UPPER SUPPORT**	PPO + PA
2460		**SPACER SLEEVE**	PPO
3412		**SUPPORT SLEEVE**	AISI 316L + CERAMIC
2460	**KIT C** *intermediate support*	**WASHER AND SPACERS**	PPO
3044		**SUPPORT WITH BUSH AND DISC**	PPO + PA
3420		**SUPPORT SLEEVE WITH SPACERS**	AISI 316L
1410	**KIT D** *stage*	**COMPLETE DIFFUSER**	PPO + AISI 304
2250		**IMPELLER**	PPO
2250	**KIT E** *first stage*	**FIRST IMPELLER**	PPO
3044		**SUPPORT WITH BUSH AND DISC**	PPO + PA
3420		**SUPPORT SLEEVE WITH SPACERS**	AISI 316L
6531		**GRID**	AISI 304
2110	**KIT F** *shaft with coupling*	**SHAFT WITH COUPLING**	AISI 431B + AISI 316
2910		**SCREW WITH WASHER**	AISI 304
2920	**KIT G** *cover cable*	**2× SCREW AND CLIP**	AISI 304
8361		**CABLE COVER**	AISI 304
1130	-	**BOTTOM CASING**	AISI 304
1414		**SPACER PIPE**	AISI 304
6310		**TOP CASING**	AISI 304
8210		**EXTERNAL PIPE**	AISI 304

6ES

Submersible Well Pumps

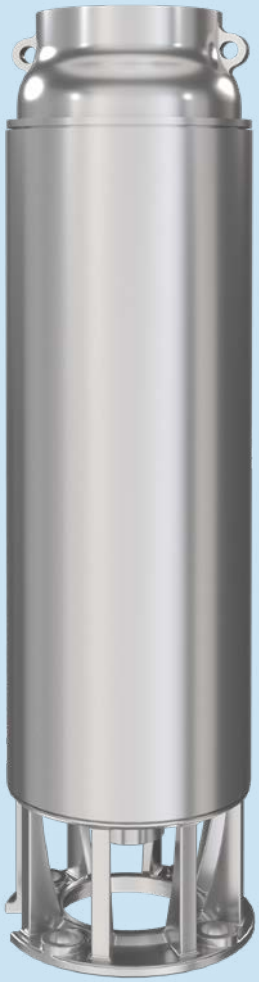

Designed for 6” wells, the 6ES series is entirely constructed from stainless steel. Featuring suction and discharge ports in AISI 304 microfusion and impellers/diffusers in stamped 304L, these units offer superior corrosion resistance and durability.

Technical Highlights: Designed for high pressures (up to 40 bar) via series-connected pump groups. Includes a 3” threaded discharge port with an integrated non-return valve. Standard coupling for 4” (NEMA) motors up to 7.5 HP and 6” motors from 10 HP.

Operation: Max diameter: 140 mm (including cable guard). Rotation is counterclockwise from the discharge side. Suitable for continuous duty in vertical or horizontal positions. Minimum water level: 1m above suction.

Applications: Deep well extraction (domestic/industrial), lifting systems, surface/sprinkler irrigation, water supply networks, firefighting, and pressure tank supply.

Construction features	
Suction and delivery outlet	stainless steel AISI 304
External jacket	stainless steel AISI 304
Impellers	stainless steel AISI 304
Diffusers	stainless steel AISI 304
Support bush with sleeves	EPDM + ceramic-coated stainless steel AISI 316L
Shaft	stainless steel AISI 431B
Coupling	stainless steel AISI 316L
Quantity of sand in the water	250 g/m³
Max liquid temperature	max 60 °C
Non-return valve	standard on all models

6ES 225

60 Hz - 2850 rpm								Q										
TYPE	SUITABLE MOTOR					AXIAL LOAD	l/min	0	100	125	150	175	200	225	250	275	300	350
	P2		S.F.	3~ 380V	3~ 220V		l/sec	0	1,67	2,08	2,50	2,92	3,33	3,75	4,17	4,58	5,00	5,83
	HP	kW		A		N	m³/h	0	6,0	7,5	9,0	10,5	12,0	13,5	15,0	16,5	18,0	21,0
6ES 225/02-20	2	1,5	1,25	4,5	8,2	566	H (m)	35	32	31	30	29	28	26	24	22	19	13
6ES 225/03-30	3	2,2	1,15	6,4	11	849		53	48	46	45	43	41	39	37	33	29	19
6ES 225/04-40	4	3		8,3	14,8	1131		71	63	62	60	58	55	52	49	44	39	26
6ES 225/05-50	5,5	4		9,6	17,1	1414		88	79	77	75	72	69	65	61	55	49	32
6ES 225/06-55	5,5	4		9,6	17,1	1697		106	95	92	90	87	83	79	73	66	58	39
6ES 225/08-75	7,5	5,5		13,6	25	2263		141	127	123	120	116	111	105	97	89	78	52
6ES 225/11-100	10	7,5		17,4	29	3112		194	174	169	165	159	152	144	134	122	107	71
6ES 225/14-125	12,5	9,3		20,2	35	3960		248	222	215	210	203	193	183	171	155	136	90
6ES 225/17-150	15	11		25,6	39,8	4809		301	269	262	255	246	235	223	207	188	165	110
6ES 225/20-175	17,5	13		27,5	47	5657		354	317	308	300	290	276	262	244	221	195	129
6ES 225/23-200	20	15		34,1	54,5	6506		407	365	354	345	333	318	301	280	255	224	149
6ES 225/26-250	25	18,5		39,8	67,5	7355		460	412	400	390	377	359	340	317	288	253	168
6ES 225/28-250	25	18,5		39,8	67,5	7920		495	444	431	420	406	387	367	341	310	273	181
6ES 225/30-300	30	22		47,3	80,2	8486		530	476	462	450	435	415	393	365	332	292	194
6ES 225/32-300	30	22		47,3	80,2	9052		566	507	493	480	463	442	419	390	354	311	207
6ES 225/34-350	40	30		66,2	115	9618		601	539	523	510	492	470	445	414	376	331	220
6ES 225/36-350	40	30		66,2	115	10183		636	571	554	540	521	498	471	439	398	350	233
6ES 225/38-350	40	30		66,2	115	10749		672	602	585	570	550	525	498	463	420	370	246
6ES 225/40-400	40	30		66,2	115	11315		707	634	616	600	579	553	524	487	443	389	259
6ES 225/42-400	40	30		66,2	115	11880		743	666	646	630	608	580	550	512	465	409	271

Eff. max %	66,14
Max kW / St.	0,79

NPSH (m)	Q=25%	Q=50%	Q=75%	Q=100%
	3,3	3,8	5	6,5

6ES 300

60 Hz - 2850 rpm								Q												
TYPE	SUITABLE MOTOR					AXIAL LOAD	l/min	0	150	175	200	225	250	275	300	350	400	450	500	550
	P2		S.F.	3~ 380V	3~ 220V		l/sec	0	2,50	2,92	3,33	3,75	4,17	4,58	5,00	5,83	6,67	7,50	8,33	9,17
	HP	kW		A		N	m³/h	0	9,0	10,5	12,0	13,5	15,0	16,5	18,0	21,0	24,0	27,0	30,0	33,0
6ES 300/02-30	3	2,2	1,15	6,4	11	639	H (m)	35	33	32	32	31	30	30	29	27	23	19	15	11
6ES 300/03-40	4	3		8,3	14,8	958		53	49	48	47	47	46	45	43	40	35	29	23	16
6ES 300/04-55	5,5	4		9,6	17,1	1278		71	65	64	63	62	61	59	58	53	47	38	30	21
6ES 300/05-75	7,5	5,5		13,6	25	1597		89	82	80	79	78	76	74	72	67	58	48	38	27
6ES 300/07-10	10	7,5		17,4	29	2236		124	114	112	111	109	107	104	101	93	82	67	53	37
6ES 300/09-125	12,5	9,3		20,2	35	2875		160	147	144	142	140	137	134	130	120	105	86	68	48
6ES 300/11-150	15	11		25,6	39,8	3513		195	179	177	174	171	168	164	159	147	128	106	83	58
6ES 300/13-175	17,5	13		27,5	47	4152		231	212	209	205	202	198	193	188	173	151	125	98	69
6ES 300/15-200	20	15		34,1	54,5	4791		266	245	241	237	233	229	223	217	200	175	144	113	80
6ES 300/18-250	25	18,5		39,8	67,5	5749		319	293	289	284	280	274	268	260	240	210	173	135	95
6ES 300/20-300	30	22		47,3	80,2	6388		355	326	321	316	311	305	297	289	266	233	192	150	106
6ES 300/22-300	30	22		47,3	80,2	7027		390	359	353	348	342	335	327	318	293	256	211	165	117
6ES 400/24-350	40	30		66,2	115	7665		426	391	385	379	373	366	357	347	320	279	230	180	127
6ES 400/26-350	40	30		66,2	115	8304		461	424	417	411	404	396	387	376	346	303	250	195	138
6ES 300/28-400	40	30		66,2	115	8943		497	456	449	442	435	427	416	405	373	326	269	210	148
6ES 300/30-400	40	30		66,2	115	9582		532	489	482	474	467	457	446	433	400	349	288	225	159
6ES 300/32-500	50	37		84,5	-	10220		568	522	514	506	498	488	476	462	426	373	307	240	170
6ES 300/34-500	50	37		84,5	-	10859		603	554	546	537	529	518	506	491	453	396	326	255	180
6ES 300/36-500	50	37		84,5	-	11498		639	587	578	569	560	549	535	520	480	419	346	270	191
6ES 300/38-600*	60	45		-	-	12137		674	619	610	600	591	579	565	549	506	443	365	285	201
6ES 300/40-600*	60	45		-	-	12776		710	652	642	632	622	610	595	578	533	466	384	300	212
6ES 300/42-600*	60	45		-	-	13414		745	685	674	664	653	640	625	607	560	489	403	315	223

**motor available on request*

Eff. max %	72,74
Max kW / St.	1,10

NPSH (m)	Q=25%	Q=50%	Q=75%	Q=100%
	2,15	2,7	3,2	8,0

Tolerances according to UNI ISO 9906 grade 3B

6ES 400

60 Hz - 2850 rpm								Q														
TYPE	SUITABLE MOTOR					AXIAL LOAD	l/min	0	200	250	300	350	400	450	500	550	600	650	700	750	800	850
	P2		S.F.	3~ 380V	3~ 220V		l/sec	0	3,33	4,17	5,00	5,83	6,67	7,50	8,33	9,17	10,0	10,8	11,7	12,5	13,3	14,2
	HP	kW		A		N	m³/h	0	12,0	15,0	18,0	21,0	24,0	27,0	30,0	33,0	36,0	39,0	42,0	45,0	48,0	51,0
6ES 400/02-55	5,5	4		9,6	17,1	1029		37	34	33	33	32	31	30	29	27	25	23	20	17	14	10
6ES 400/03-75	7,5	5,5		13,6	25	1543		55	51	50	49	48	47	46	44	41	38	34	30	26	21	15
6ES 400/04-100	10	7,5		17,4	29	2058		73	68	67	65	64	63	61	58	55	50	46	41	35	28	20
6ES 400/05-125	12,5	9,3		20,2	35	2572		92	85	83	82	80	78	76	73	68	63	57	51	43	36	25
6ES 400/06-125	12,5	9,3		20,2	35	3087		110	102	100	98	96	94	91	87	82	75	68	61	52	43	30
6ES 400/07-150	15	11		25,6	39,8	3601		129	119	117	114	112	110	106	102	96	88	80	71	61	50	35
6ES 400/08-175	17,5	13		27,5	47	4116		147	136	133	131	128	125	122	116	109	101	91	81	70	57	40
6ES 400/09-200	20	15		34,1	54,5	4630		165	153	150	147	144	141	137	131	123	113	103	91	78	64	45
6ES 400/10-250	25	18,5		39,8	67,5	5144		184	170	167	164	160	157	152	145	137	126	114	102	87	71	50
6ES 400/11-250	25	18,5		39,8	67,5	5659		202	187	183	180	176	172	167	160	150	138	125	112	96	78	55
6ES 400/12-250	25	18,5		39,8	67,5	6173		220	204	200	196	192	188	182	174	164	151	137	122	104	85	60
6ES 400/13-300	30	22	1,15	47,3	80,2	6688	H (m)	239	221	217	213	208	204	198	189	177	163	148	132	113	92	65
6ES 400/14-300	30	22		47,3	80,2	7202		257	238	233	229	224	219	213	203	191	176	160	142	122	99	70
6ES 600/15-350	40	26		66,2	115	7717		276	255	250	245	240	235	228	218	205	189	171	152	130	107	75
6ES 600/16-350	40	26		66,2	115	8231		294	272	267	262	256	251	243	232	218	201	182	162	139	114	80
6ES 400/17-400	40	30		66,2	115	8745		312	289	283	278	272	266	258	247	232	214	194	173	148	121	85
6ES 400/18-400	40	30		66,2	115	9260		331	306	300	294	288	282	274	262	246	226	205	183	157	128	90
6ES 400/19-400	40	30		66,2	115	9774		349	323	317	311	304	298	289	276	259	239	217	193	165	135	95
6ES 400/20-500	50	37		84,5	-	10289		367	340	334	327	320	313	304	291	273	251	228	203	174	142	100
6ES 400/21-500	50	37		84,5	-	10803		386	357	350	343	336	329	319	305	287	264	239	213	183	149	105
6ES 400/22-500	50	37		84,5	-	11318		404	374	367	360	352	345	334	320	300	277	251	223	191	156	110
6ES 400/24-600*	60	45		-	-	12347		441	408	400	392	384	376	365	349	328	302	274	244	209	170	120
6ES 400/26-600*	60	45		-	-	13375		478	442	434	425	416	407	395	378	355	327	296	264	226	185	130
6ES 400/28-600*	60	45		-	-	14404		514	476	467	458	448	439	426	407	382	352	319	284	243	199	140

**motor available on request*

Eff. max %	74,35
Max kW / St.	1,71

NPSH (m)	Q=25%	Q=50%	Q=75%	Q=100%
	2,3	2,6	3,0	8,0

Tolerances according to UNI ISO 9906 grade 3B

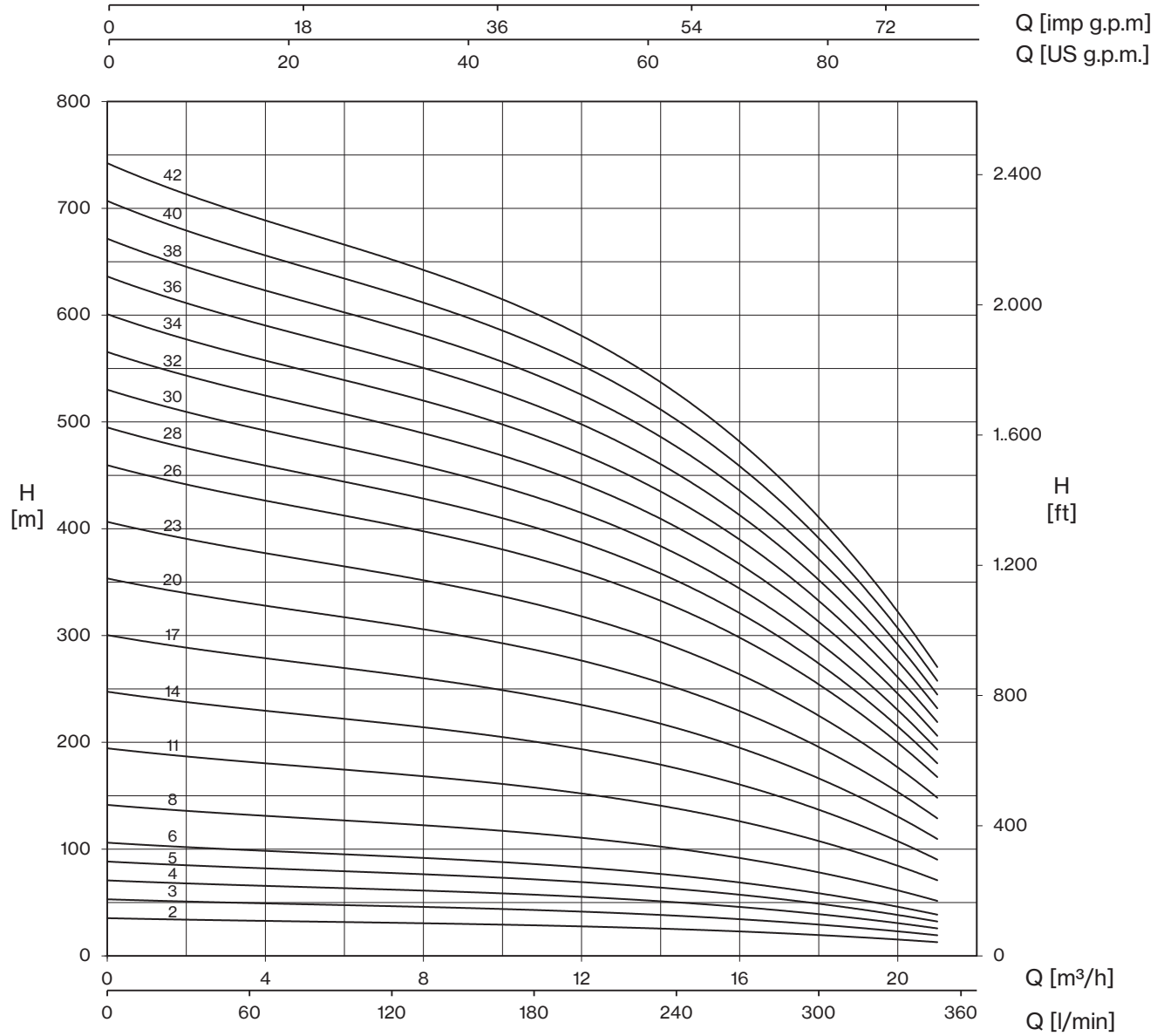
Q [imp g.p.m]
Q [US g.p.m.]
H [m]
H [ft]
Q [m³/h]
Q [l/min]
42
40
38
36
34
32
30
28
26
23
20
17
14
11
8
6
5
4
3
2

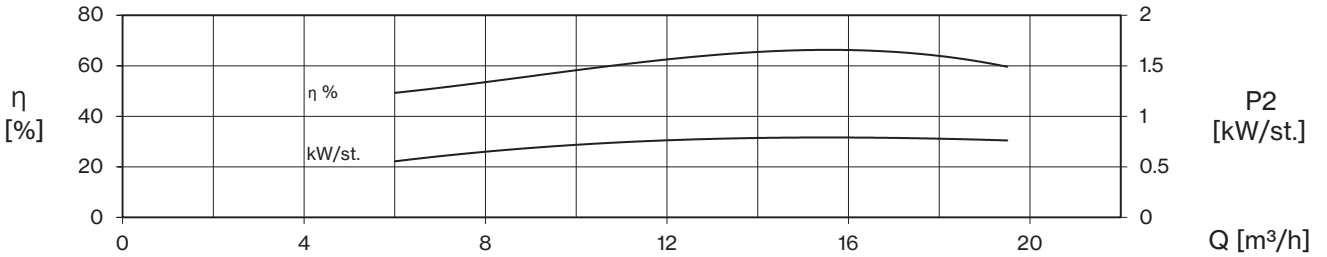
η [%]
P2 [kW/st.]
η %
kW/st.
Q [m³/h]

6ES 300

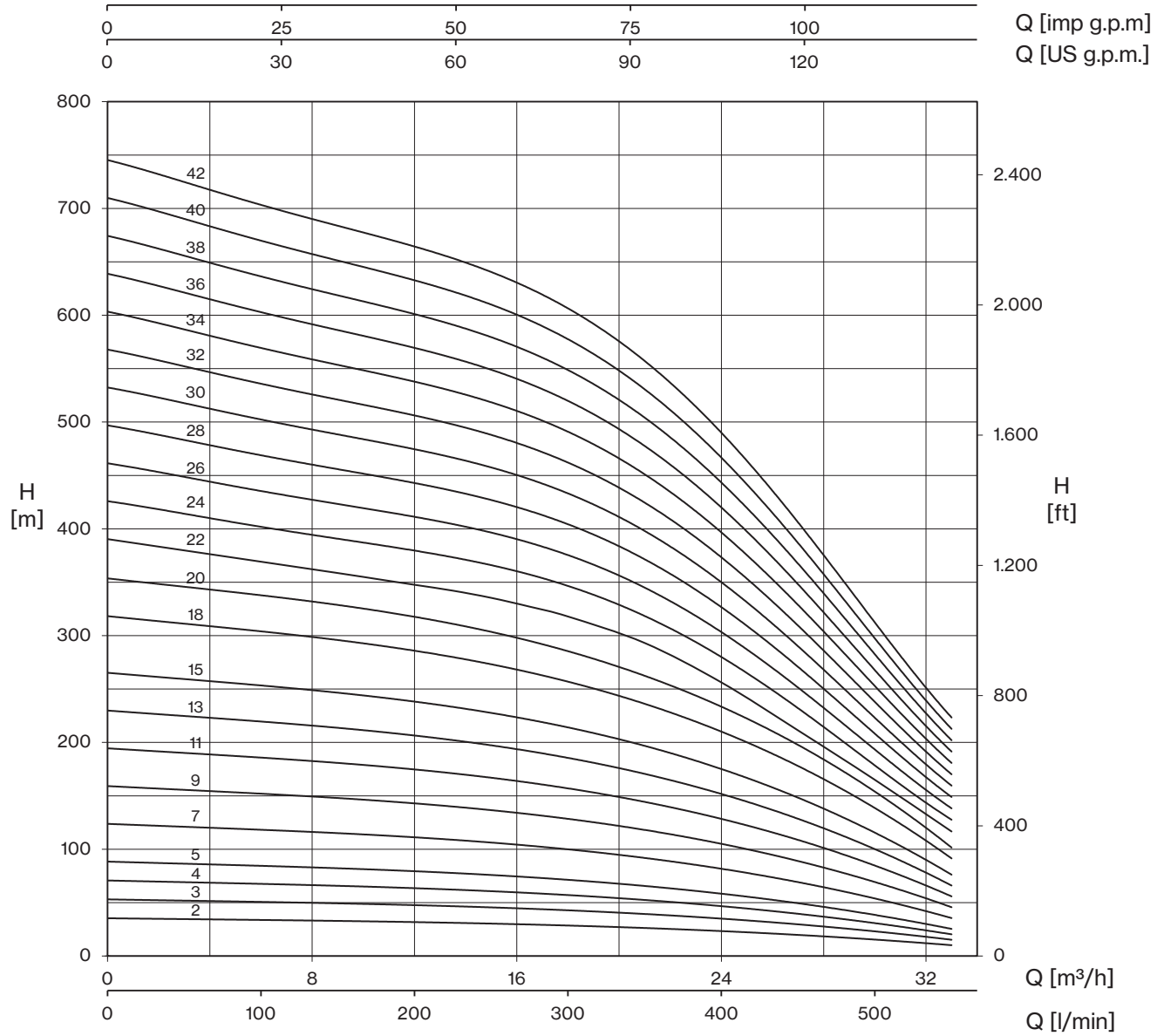
Q [imp g.p.m]
0 25 50 75 100
Q [US g.p.m.]
0 30 60 90 120
H [m]
800 700 600 500 400 300 200 100 0
H [ft]
2.400 2.000 1.600 1.200 800 400 0
42 40 38 36 34 32 30 28 26 24 22 20 18 15 13 11 9 7 5 4 3 2
0 8 16 24 32
Q [m³/h]
0 100 200 300 400 500
Q [l/min]

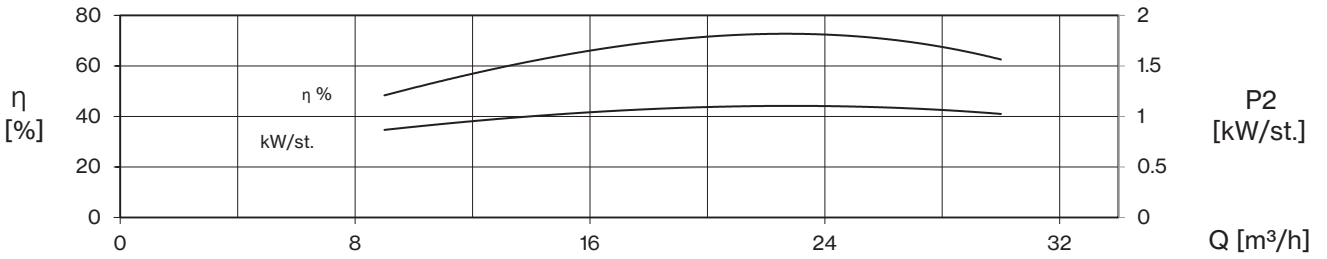
η [%]
80 60 40 20 0
η %
kW/st.
P2 [kW/st.]
2 1.5 1 0.5 0
0 8 16 24 32
Q [m³/h]

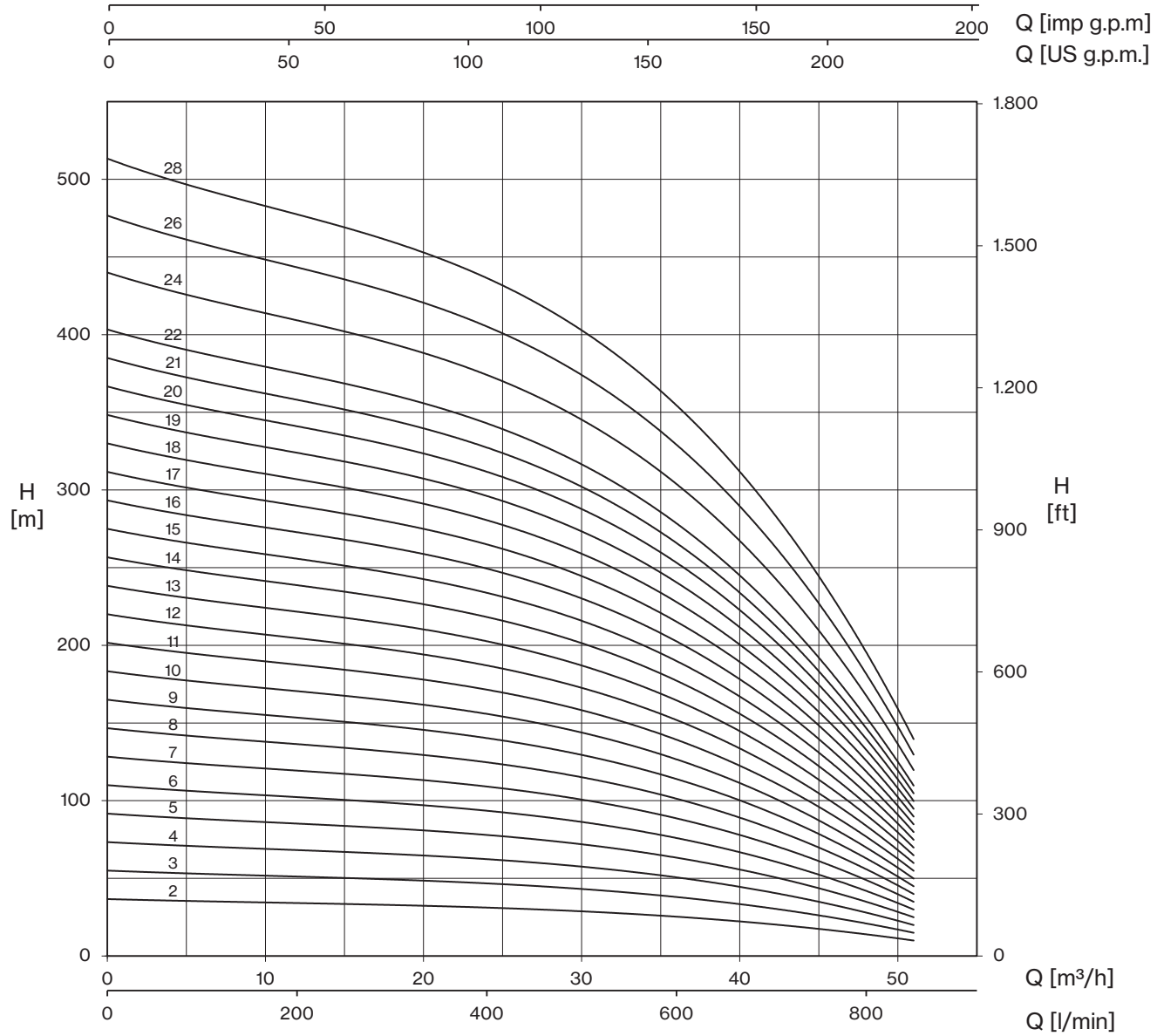
Q [imp g.p.m]
Q [US g.p.m.]
H [m]
H [ft]
Q [m³/h]
Q [l/min]
28
26
24
22
21
20
19
18
17
16
15
14
13
12
11
10
9
8
7
6
5
4
3
2

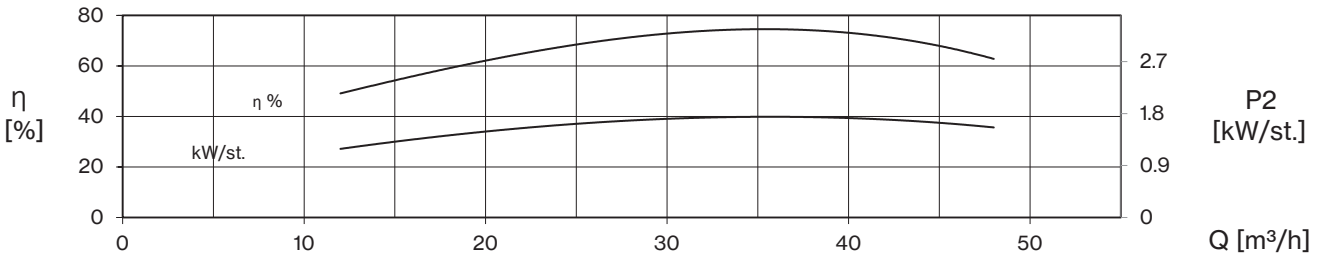
η [%]
η %
kW/st.
P2 [kW/st.]
Q [m³/h]

6ES

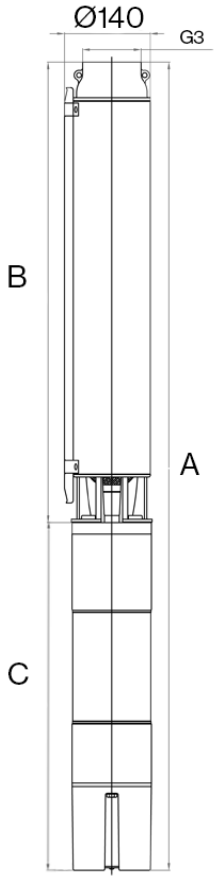

6ES 225

TYPE	MOTOR BRACKET	DIMENSIONS (mm)			WEIGHT (kg)		
		A (3~ 380V)	B	C (3~ 380V)	A (3~ 380V)	B	C (3~ 380V)
6ES 225/02-20-4	4" NEMA	699	314	385	18,9	8,5	10,4
6ES 225/03-30-4		764	344	420	21,5	9,5	12
6ES 225/04-40-4		792	374	418	23,3	10,5	12,8
6ES 225/05-50-4		872	404	468	26,8	11,5	15,3
6ES 225/06-55-4		935	467	468	28,5	13,2	15,3
6ES 225/08-75-4		1065	527	538	33,8	15,2	18,6
6ES 225/11-100	6" NEMA	1217	617	600	60,2	18,2	42
6ES 225/14-125		1307	707	600	66,3	21,3	45
6ES 225/17-150		1512	812	700	73,7	25,7	48
6ES 225/20-175		1602	902	700	78,8	28,8	50
6ES 225/23-200		1698	938	760	85,8	31,8	54
6ES 225/26-250		1858	1028	830	99,9	34,9	65
6ES 225/28-250		1918	1088	830	101,9	36,9	65
6ES 225/30-300*		2238	1348	890	115,7	45,7	70
6ES 225/32-300*		2298	1408	890	117,9	47,9	70
6ES 225/34-350*		2498	1468	1030	140	50,0	90
6ES 225/36-350*		2558	1528	1030	142,2	52,2	90
6ES 225/38-350*		2618	1588	1030	144,3	54,3	90
6ES 225/40-400*		2678	1648	1030	146,4	56,4	90
6ES 225/42-400*		2738	1708	1030	148,6	58,6	90

** High pressure pump supplied in blocks*

6ES 300

TYPE	MOTOR BRACKET	DIMENSIONS (mm)			WEIGHT (kg)		
		A (3~ 380V)	B	C (3~ 380V)	A (3~ 380V)	B	C (3~ 380V)
6ES 300/02-30-4	4" NEMA	695	275	420	20,7	8,7	12
6ES 300/03-40-4		731	313	418	22,6	9,8	12,8
6ES 300/04-55-4		851	383	468	30,6	15,3	15,3
6ES 300/05-75-4		959	421	538	31,3	12,7	18,6
6ES 300/07-10	6" NEMA	1096	496	600	56,9	14,9	42
6ES 300/09-125		1171	571	600	62,2	17,2	45
6ES 300/11-150		1346	646	700	67,4	19,4	48
6ES 300/13-175		1421	721	700	71,6	21,6	50
6ES 300/15-200		1556	796	760	77,9	23,9	54
6ES 300/18-250		1753	923	830	93,6	28,6	65
6ES 300/20-300		1888	998	890	100,9	30,9	70
6ES 300/22-300		1963	1073	890	103,1	33,1	70
6ES 400/24-350		2178	1148	1030	125,4	35,4	90
6ES 400/26-350		2253	1223	1030	127,6	37,6	90
6ES 300/28-400*		2528	1498	1030	136,9	46,9	90
6ES 300/30-400*		2603	1573	1030	139,3	49,3	90
6ES 300/32-500*		2818	1648	1170	152,7	51,7	101
6ES 300/34-500*		2893	1723	1170	155,1	54,1	101
6ES 300/36-500*		2968	1798	1170	157,4	56,4	101
6ES 300/38-600*		-	1873	-	-	58,8	-
6ES 300/40-600*		-	1948	-	-	61,2	-
6ES 300/42-600*		-	2023	-	-	63,6	-

** High pressure pump supplied in blocks*

6ES 400

TYPE	MOTOR BRACKET	DIMENSIONS (mm)			WEIGHT (kg)		
		A (3~ 380V)	B	C (3~ 380V)	A (3~ 380V)	B	C (3~ 380V)
6ES 400/02-55-4	4" NEMA	761	293	468	24,5	9,2	15,3
6ES 400/03-75-4		911	373	538	29,8	11,2	18,6
6ES 400/04-100	6" NEMA	1019	419	600	54,5	12,5	42
6ES 400/05-125		1066	466	600	58,9	13,9	45
6ES 400/06-125		1112	512	600	60,3	15,3	45
6ES 400/07-150		1259	559	700	64,6	16,6	48
6ES 400/08-175		1305	605	700	68	18	50
6ES 400/09-200		1412	652	760	73,4	19,4	54
6ES 400/10-250		1528	698	830	85,7	20,7	65
6ES 400/11-250		1575	745	830	87,1	22,1	65
6ES 400/12-250		1621	791	830	88,5	23,5	65
6ES 400/13-300		1728	838	890	94,8	24,8	70
6ES 400/14-300		1774	884	890	96,2	26,2	70
6ES 600/15-350		1961	931	1030	117,6	27,6	90
6ES 600/16-350		2022	992	1030	120,3	30,3	90
6ES 400/17-400		2069	1039	1030	121,7	31,7	90
6ES 400/18-400		2115	1085	1030	123,1	33,1	90
6ES 400/19-400		2162	1132	1030	124,4	34,4	90
6ES 400/20-500		2348	1178	1170	136,8	35,8	101
6ES 400/21-500		2395	1225	1170	138,2	37,2	101
6ES 400/22-500		2441	1271	1170	139,5	38,5	101
6ES 400/24-600*		-	1564	-	-	48,4	-
6ES 400/26-600*		-	1657	-	-	51,3	-
6ES 400/28-600*		-	1750	-	-	54,2	-

** High pressure pump supplied in blocks*

6ES

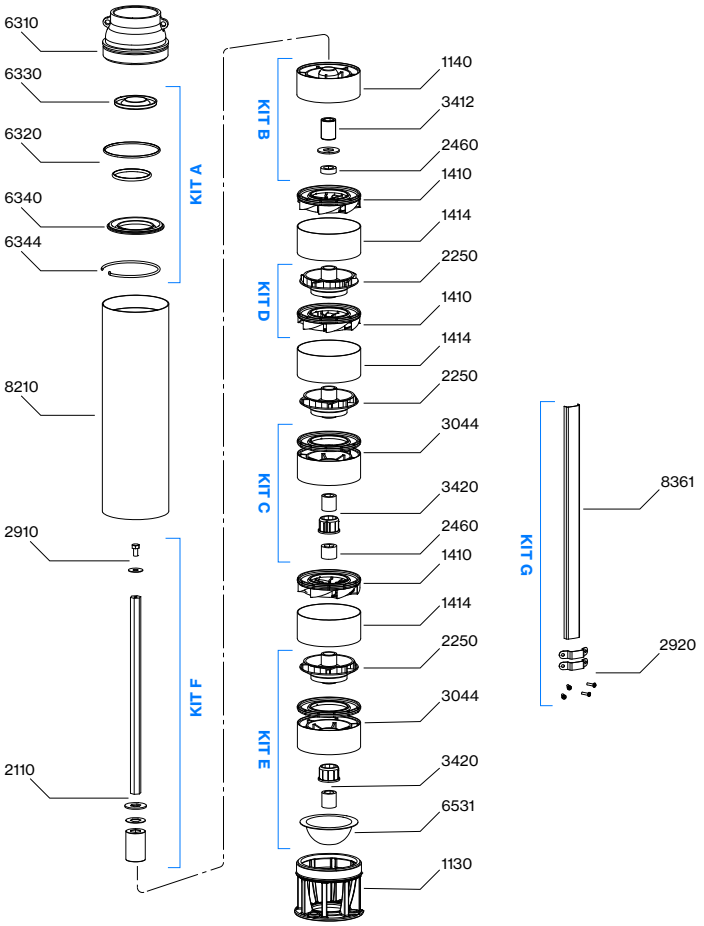

N. CODE	KIT	DESCRIPTION	MATERIAL
6320	**KIT A** *check valve*	**O-RINGS**	STAINLESS STEEL AISI 304
6330		**PLUG/STOPPER**	STAINLESS STEEL AISI 304
6340		**PLUG SUPPORT**	STAINLESS STEEL AISI 304
6344		**SEEGER RING (CIRCLIP)**	STAINLESS STEEL AISI 304
1140	**KIT B** *upper support*	**UPPER SUPPORT**	STAINLESS STEEL AISI 304
2460		**SHIM/THICKNESS**	STAINLESS STEEL AISI 316L + CERAMIC
3412		**BEARING BUSHING**	STAINLESS STEEL AISI 304
2460	**KIT C** *intermediate support*	**SHIMS/SPACERS**	STAINLESS STEEL AISI 304
3044		**SUPPORT WITH BUSHING AND DISC**	STAINLESS STEEL AISI 316L
3420		**BEARING BUSHING**	STAINLESS STEEL AISI 304
1410	**KIT D** *stage*	**COMPLETE DIFFUSER**	STAINLESS STEEL AISI 304
2250		**IMPELLER**	STAINLESS STEEL AISI 304
2250	**KIT E** *first stage*	**FIRST IMPELLER**	STAINLESS STEEL AISI 304
3044		**SUPPORT WITH BUSHING AND DISC**	STAINLESS STEEL AISI 316L
3420		**BEARING BUSHING**	STAINLESS STEEL AISI 304
6531		**STRAINER/GRID**	STAINLESS STEEL AISI 431B + STAINLESS STEEL AISI 316
2110	**KIT F** *shaft with coupling*	**SHAFT WITH COUPLING**	STAINLESS STEEL AISI 304
2910		**SCREW WITH WASHER**	STAINLESS STEEL AISI 304
2920	**KIT G** *cover cable*	**SCREWS AND CLIPS**	STAINLESS STEEL AISI 304
8361		**CABLE COVER**	STAINLESS STEEL AISI 304
1130	-	**SUCTION BODY**	STAINLESS STEEL AISI 304
1414		**SPACER PIPE**	STAINLESS STEEL AISI 304
6310		**VALVE BODY**	STAINLESS STEEL AISI 304
8210		**EXTERNAL PIPE**	STAINLESS STEEL AISI 304

6-8-10LMG line

Submersible Well Pumps

Submersible multistage centrifugal pumps for 6”, 8”, 10” wells. Check valve built into the delivery outlet. The motor bracket and coupling are made according to NEMA standards. Most common applications are civil and agricultural.

Construction features	
Suction and delivery outlet	cast iron GG25
Valve	stainless steel AISI 304
Impellers and diffusers	cast iron GG25; AISI 304 impeller on request
Upper bushings	NBR rubber
Shaft pump side	stainless steel AISI 304
Quantity of sand in the water	max 50 g/m³

Motor	
Asynchronous 2 pole	rewindable water cooled
Insulation class	Y (max 30 °C) - PPC winding type F (max 50 °C) - PE2+PA or LPE winding type
Protection degree	IP68
Liquid temperature	max 30 °C (max 50 °C on request)
Depth of immersion	max 350 m

6LMG 38

60 Hz - 3500 rpm				Q						
TYPE	P2		l/min	0	360	480	600	720	840	960
			l/sec	0	6	8	10	12	14	16
	HP	kW	m³/h	0	21,6	28,8	36	43,2	50,4	57,6
6LMG 38/01	3	2,2	H (m)	21	17	16	14	13	11	7
6LMG 38/02	7,5	5,5		41	35	32	29	26	21	14
6LMG 38/03	10	7,5		62	52	48	43	39	32	22
6LMG 38/04	12,5	9,2		82	69	63	58	53	43	29
6LMG 38/05	15	11		103	86	79	72	66	53	36
6LMG 38/06	17,5	13		123	104	95	86	79	64	43
6LMG 38/07	20	15		144	121	111	101	92	75	50
6LMG 38/08	25	18,5		165	138	127	115	105	86	58
6LMG 38/09	30	22		185	156	143	130	118	96	65
6LMG 38/10	30	22		206	173	158	144	132	107	72
6LMG 38/11	35	26		226	190	174	158	145	118	79
6LMG 38/12	35	26		247	207	190	173	158	128	86
6LMG 38/13	40	30		267	225	206	187	171	139	94
6LMG 38/14	40	30		288	242	222	202	184	150	101
6LMG 38/15	50	37		309	259	238	216	197	160	108
6LMG 38/16	50	37		329	276	253	230	211	171	115
6LMG 38/17	50	37		350	294	269	245	224	182	122

Max Eff. % =	74
Max kW / St. =	2,11

NPSH (m)	Q=25%	Q=50%	Q=75%	Q=100%
	3,4	3,4	3,8	8

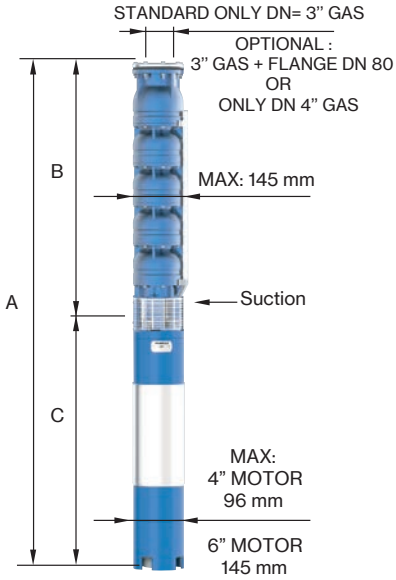

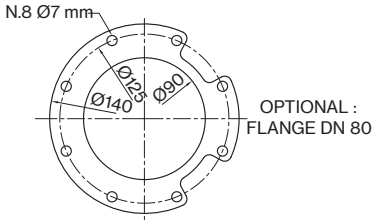

FOR COMMERCIAL TUBE
EXTERNAL DIAMETER: 88,9 mm

TYPE	MOTOR BRACKET	DIMENSIONS (mm)			WEIGHT (kg)	
		A	B	C	MOTOR	PUMP
6LMG 38/01-4	4" NEMA	846	394	452	15	11
6LMG 38/02-4		1193	495	698	27	15
6LMG 38/03	6" NEMA	1297	596	701	55	19
6LMG 38/04		1448	697	751	60	23
6LMG 38/05		1609	798	811	65	28
6LMG 38/06		1740	899	841	70	32
6LMG 38/07		1931	1000	931	75	36
6LMG 38/08		2092	1101	991	83	40
6LMG 38/09		2273	1202	1071	92	44
6LMG 38/10		2374	1303	1071	92	48
6LMG 38/11		2585	1404	1181	100	52
6LMG 38/12		2686	1505	1181	100	56
6LMG 38/13		2857	1606	1251	108	60
6LMG 38/14		2958	1707	1251	108	64
6LMG 38/15		3149	1808	1341	118	69
6LMG 38/16		3250	1909	1341	118	73
6LMG 38/17		3351	2010	1341	118	77

Sand tolerance 50 g/m³
MEI ≥ 0,4 (regulation EU N. 547/2012)
Tolerances according to UNI ISO 9906 grade 3B

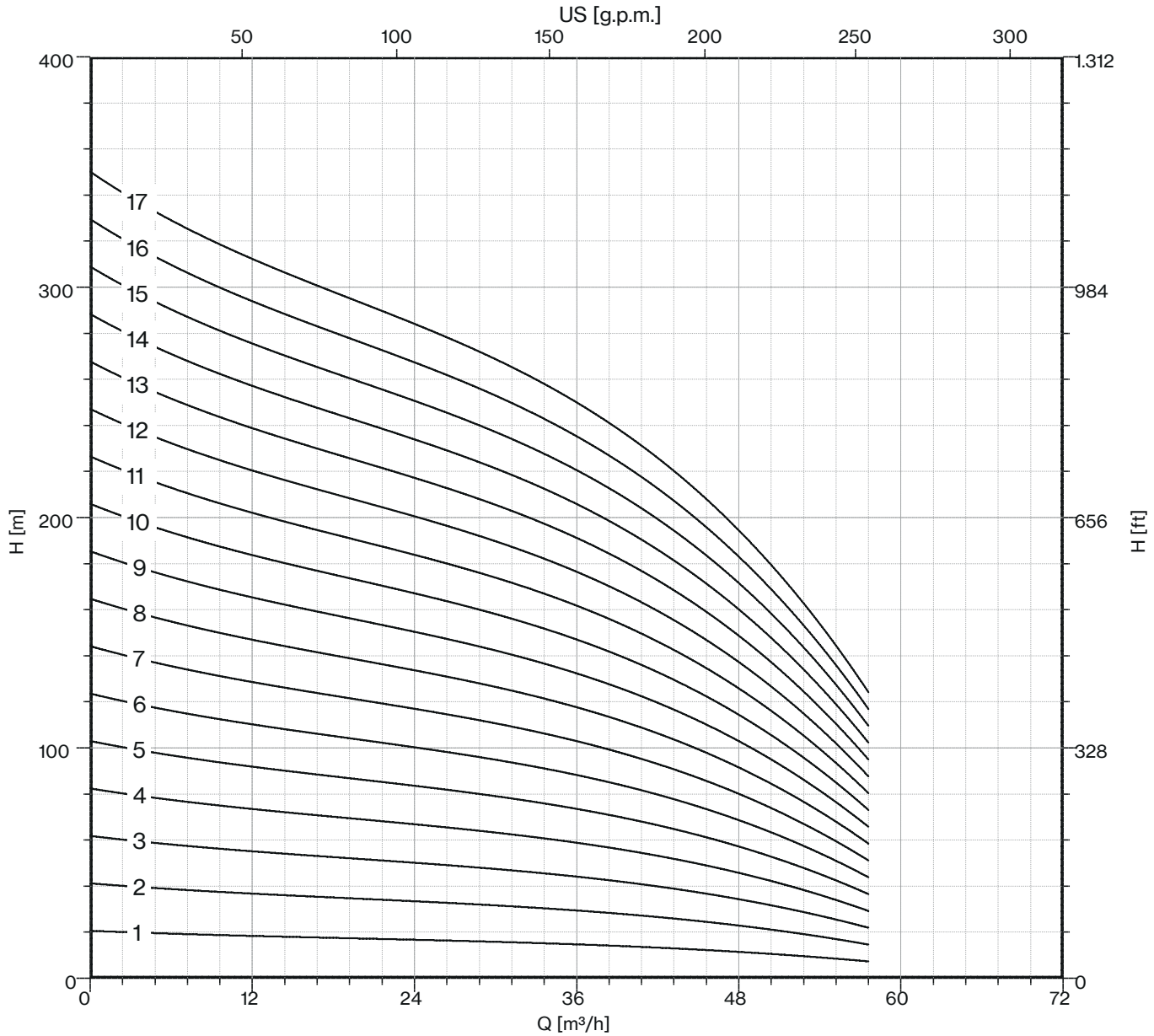

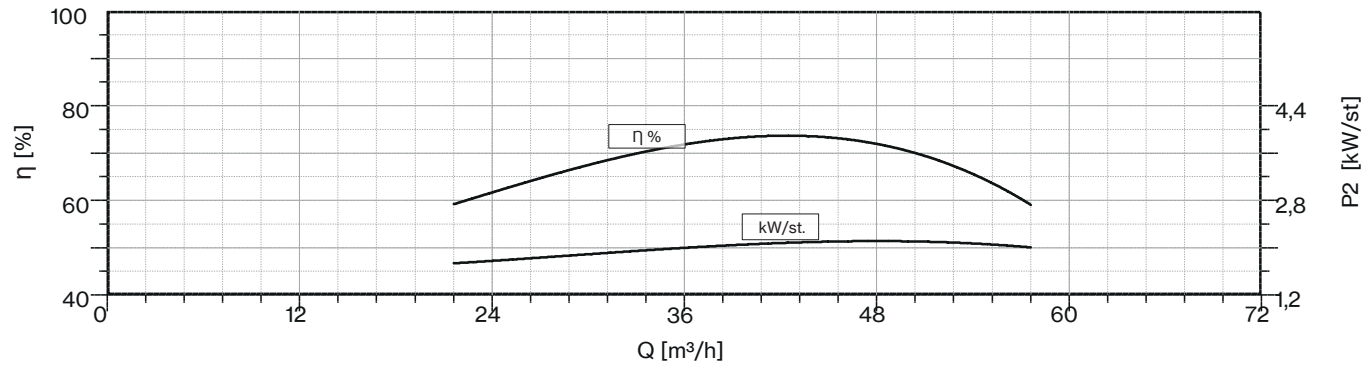

Sand tolerance 50 g/m³
MEI ≥ 0,4 (regulation EU N. 547/2012)
Tolerances according to UNI ISO 9906 grade 3B

6LMG 48

60 Hz - 3500 rpm				Q							
TYPE	P2		l/min	0	480	600	720	840	960	1080	1200
			l/sec	0	8	10	12	14	16	18	20
	HP	kW	m³/h	0	28,8	36	43,2	50,4	57,6	64,8	72
6LMG 48/01	3	2,2	H (m)	19	15	15	14	12	10	8	5
6LMG 48/02	7,5	5,5		38	31	29	27	24	21	16	10
6LMG 48/03	10	7,5		58	46	44	41	37	31	24	14
6LMG 48/04	12,5	9,2		77	61	59	55	49	41	32	19
6LMG 48/05	17,5	13		96	77	73	68	61	52	40	24
6LMG 48/06	20	15		115	92	88	82	73	62	48	29
6LMG 48/07	25	18,5		134	108	102	96	86	72	55	34
6LMG 48/08	25	18,5		154	123	117	109	98	83	63	38
6LMG 48/09	30	22		173	138	132	123	110	93	71	43
6LMG 48/10	35	26		192	154	146	137	122	103	79	48
6LMG 48/11	35	26		211	169	161	150	135	114	87	53
6LMG 48/12	40	30		230	184	176	164	147	124	95	58
6LMG 48/13	40	30		250	200	190	178	159	134	103	62
6LMG 48/14	50	37		269	215	205	192	171	144	111	67
6LMG 48/15	50	37		288	230	220	205	184	155	119	72
6LMG 48/16	50	37		307	246	234	219	196	165	127	77

Max Eff. % =	74
Max kW / St. =	2,28

NPSH (m)	Q=25%	Q=50%	Q=75%	Q=100%
	3,45	3,5	3,8	5

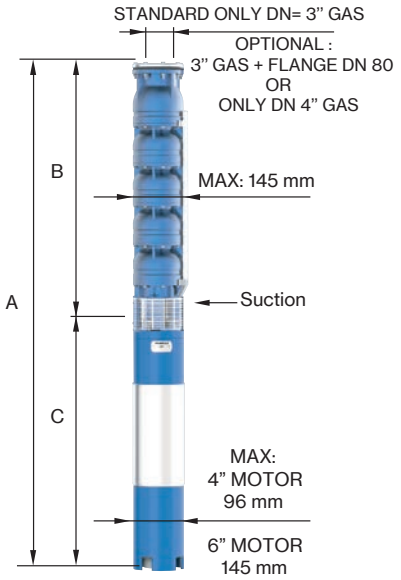

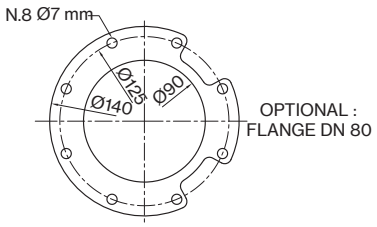

FOR COMMERCIAL TUBE
EXTERNAL DIAMETER: 88,9 mm

TYPE	MOTOR BRACKET	DIMENSIONS (mm)			WEIGHT (kg)	
		A	B	C	MOTOR	PUMP
6LMG 48/01-4	4" NEMA	846	394	452	15	11
6LMG 48/02-4		1193	495	698	27	15
6LMG 48/03	6" NEMA	1297	596	701	55	19
6LMG 48/04		1448	697	751	60	23
6LMG 48/05		1639	798	841	70	28
6LMG 48/06		1830	899	931	75	32
6LMG 48/07		1991	1000	991	83	36
6LMG 48/08		2092	1101	991	83	40
6LMG 48/09		2273	1202	1071	92	44
6LMG 48/10		2484	1303	1181	100	48
6LMG 48/11		2585	1404	1181	100	52
6LMG 48/12		2756	1505	1251	108	56
6LMG 48/13		2857	1606	1251	108	60
6LMG 48/14		3048	1707	1341	118	64
6LMG 48/15		3149	1808	1341	118	69
6LMG 48/16		3250	1909	1341	118	73

Sand tolerance 50 g/m³
MEI ≥ 0,4 (regulation EU N. 547/2012)
Tolerances according to UNI ISO 9906 grade 3B

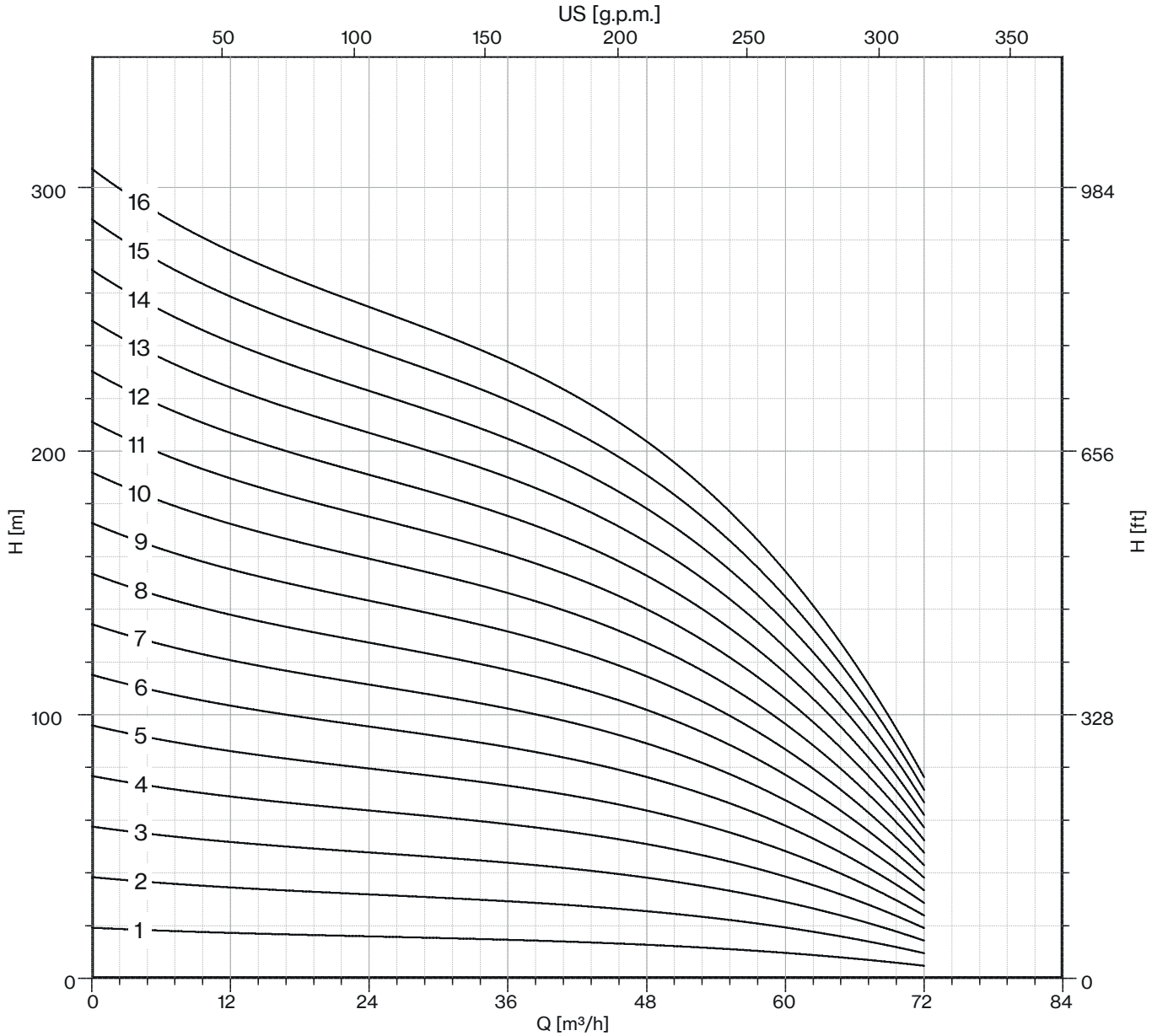

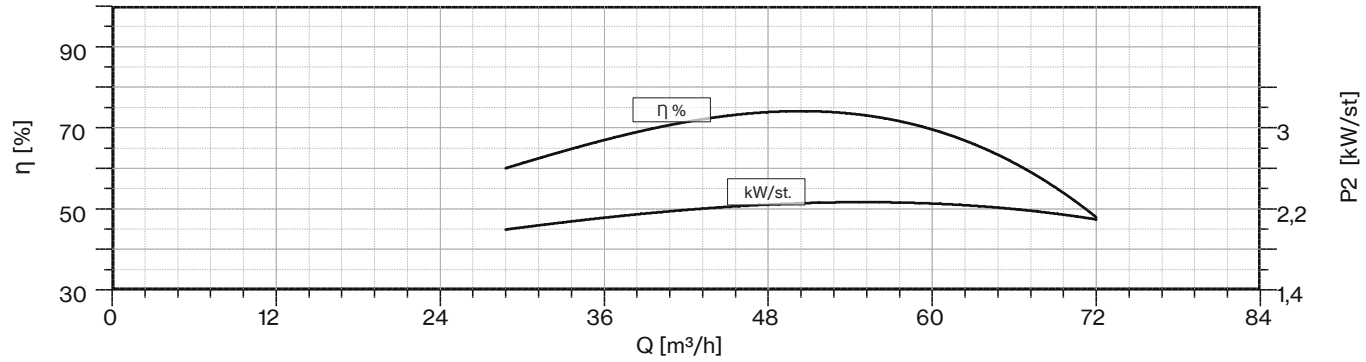

Sand tolerance 50 g/m³
MEI ≥ 0,4 (regulation EU N. 547/2012)
Tolerances according to UNI ISO 9906 grade 3B

6LMG 60

60 Hz - 3500 rpm				Q					
TYPE	P2		l/min	0	600	720	960	1200	1440
			l/sec	0	10	12	16	20	24
	HP	kW	m³/h	0	36	43,2	57,6	72	86,4
6LMG 60/01	4	3	H (m)	19	14,4	13,5	11	8	4
6LMG 60/02	7,5	5,5		37	29	27	23	17	7
6LMG 60/03	10	7,5		56	43	41	34	25	11
6LMG 60/04	15	11		75	58	54	46	34	15
6LMG 60/05	17,5	13		94	72	68	57	42	19
6LMG 60/06	20	15		112	86	81	69	51	22
6LMG 60/07	25	18,5		131	101	95	80	59	26
6LMG 60/08	30	22		150	115	108	92	68	30
6LMG 60/09	35	26		168	130	122	103	76	34
6LMG 60/10	35	26		187	144	135	114	85	37
6LMG 60/11	40	30		206	158	149	126	93	41
6LMG 60/12	40	30		225	173	162	137	102	45
6LMG 60/13	50	37		243	187	176	149	110	49
6LMG 60/14	50	37		262	202	190	160	119	52
6LMG 60/15	50	37		281	216	203	172	127	56

Max Eff. % =	73,6
Max kW / St. =	2,49

NPSH (m)	Q=25%	Q=50%	Q=75%	Q=100%
	3,8	3,8	5,1	7,1

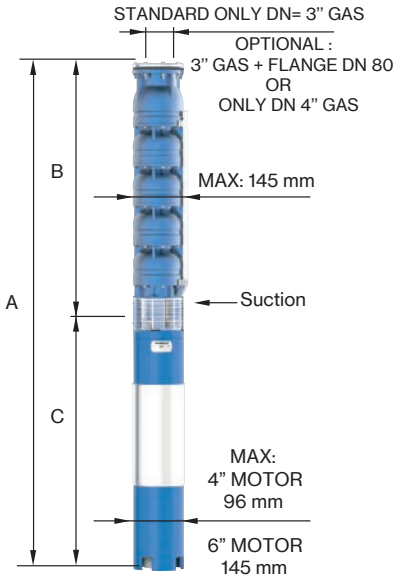

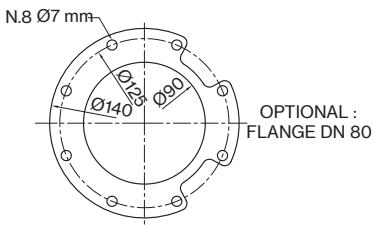

FOR COMMERCIAL TUBE
EXTERNAL DIAMETER: 88,9 mm

TYPE	MOTOR BRACKET	DIMENSIONS (mm)			WEIGHT (kg)	
		A	B	C	MOTOR	PUMP
6LMG 60/01-4	4" NEMA	957	400	557	19	12
6LMG 60/02-4		1205	507	698	27	16
6LMG 60/03	6" NEMA	1315	614	701	55	21
6LMG 60/04		1532	721	811	65	25
6LMG 60/05		1669	828	841	70	30
6LMG 60/06		1866	935	931	75	34
6LMG 60/07		2033	1042	991	83	39
6LMG 60/08		2220	1149	1071	92	43
6LMG 60/09		2437	1256	1181	100	48
6LMG 60/10		2544	1363	1181	100	52
6LMG 60/11		2721	1470	1251	108	57
6LMG 60/12		2828	1577	1251	108	61
6LMG 60/13		3025	1684	1341	118	66
6LMG 60/14		3132	1791	1341	118	70
6LMG 60/15		3239	1898	1341	118	75

Sand tolerance 50 g/m³
MEI ≥ 0,4 (regulation EU N. 547/2012)
Tolerances according to UNI ISO 9906 grade 3B

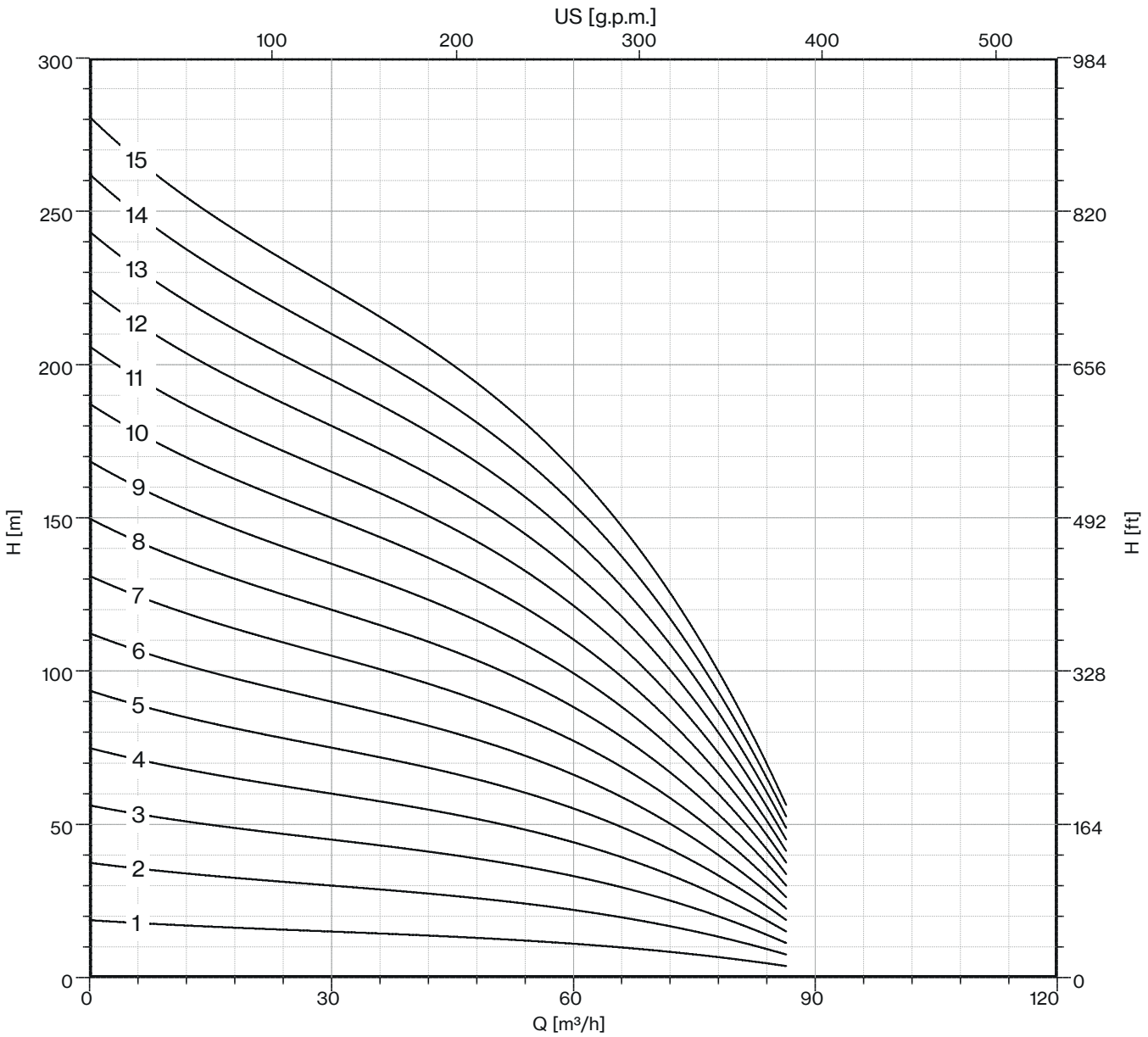
US [g.p.m.]
100
200
300
400
500
H [m]
300
250
200
150
100
50
0
H [ft]
984
820
656
492
328
164
0
15
14
13
12
11
10
9
8
7
6
5
4
3
2
1
0
30
60
90
120
Q [m³/h]

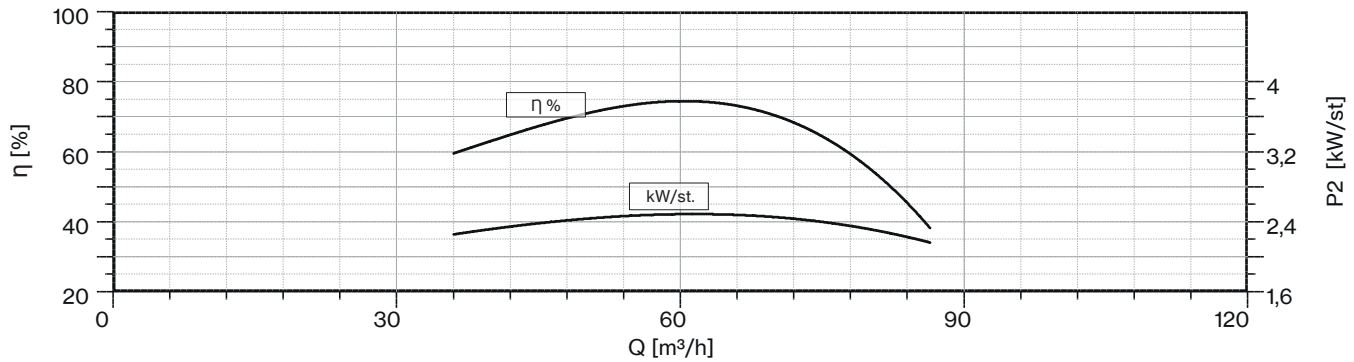
η [%]
100
80
60
40
20
P2 [kW/st]
4
3,2
2,4
1,6
η %
kW/st.
0
30
60
90
120
Q [m³/h]

6LMG 70

60 Hz - 3500 rpm				Q					
TYPE	P2		l/min	0	720	960	1200	1440	1680
			l/sec	0	12	16	20	24	28
	HP	kW	m³/h	0	43,2	57,6	72	86,4	100,8
6LMG 70/01	4	3	H (m)	19	14	13	11	8	3
6LMG 70/02	10	7,5		37	28	25	22	16	6
6LMG 70/03	12,5	9,2		56	42	38	34	25	9
6LMG 70/04	17,5	13		75	56	51	45	33	12
6LMG 70/05	20	15		94	71	63	56	41	14
6LMG 70/06	25	18,5		112	85	76	67	49	17
6LMG 70/07	30	22		131	99	89	79	57	20
6LMG 70/08	35	26		150	113	101	90	66	23
6LMG 70/09	40	30		168	127	114	101	74	26
6LMG 70/10	40	30		187	141	127	112	82	29
6LMG 70/11	50	37		206	155	139	124	90	32
6LMG 70/12	50	37		225	169	152	135	98	35

Max Eff. % =	74
Max kW / St. =	3

NPSH (m)	Q=25%	Q=50%	Q=75%	Q=100%
	3,8	3,8	5,1	7,1

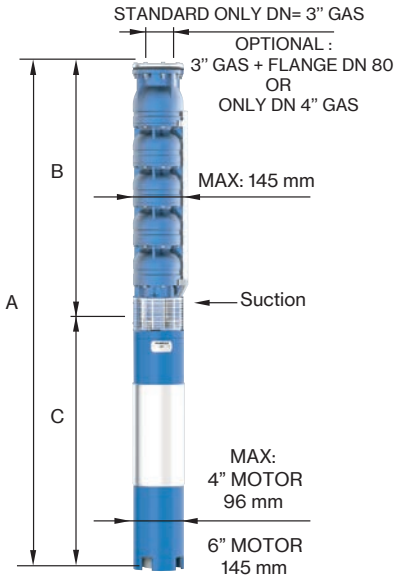

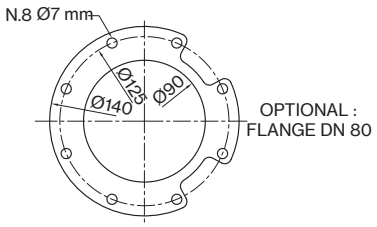

FOR COMMERCIAL TUBE
EXTERNAL DIAMETER: 88,9 mm

TYPE	MOTOR BRACKET	DIMENSIONS (mm)			WEIGHT (kg)	
		A	B	C	MOTOR	PUMP
6LMG 70/01-4	4" NEMA	957	400	557	19	12
6LMG 70/02	6" NEMA	1208	507	701	55	16
6LMG 70/03		1365	614	751	60	21
6LMG 70/04		1562	721	841	70	25
6LMG 70/05		1759	828	931	75	30
6LMG 70/06		1926	935	991	83	34
6LMG 70/07		2113	1042	1071	92	39
6LMG 70/08		2330	1149	1181	100	43
6LMG 70/09		2507	1256	1251	108	48
6LMG 70/10		2614	1363	1251	108	52
6LMG 70/11		2811	1470	1341	118	57
6LMG 70/12		2918	1577	1341	118	61

Sand tolerance 50 g/m³
MEI ≥ 0,4 (regulation EU N. 547/2012)
Tolerances according to UNI ISO 9906 grade 3B

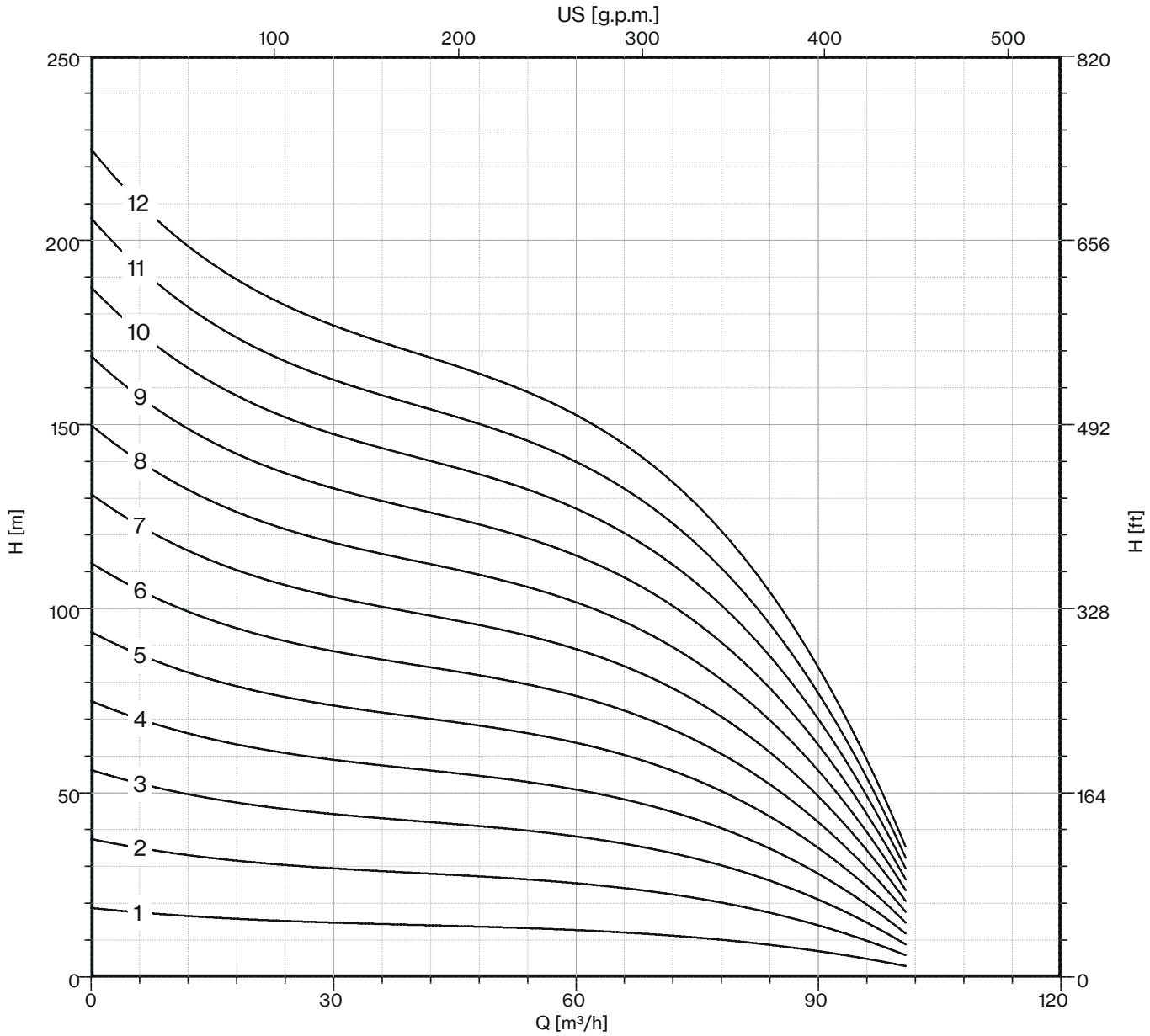

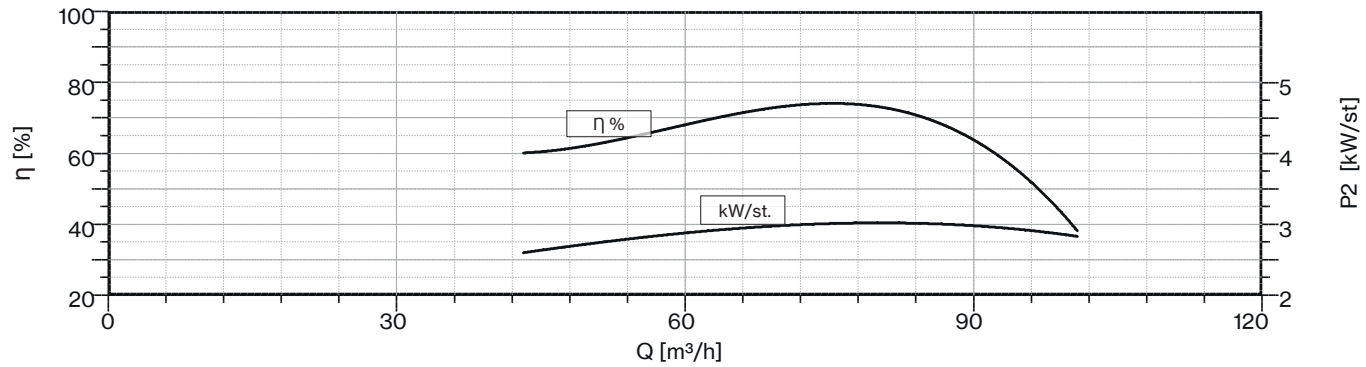

Sand tolerance 50 g/m³
MEI ≥ 0,4 (regulation EU N. 547/2012)
Tolerances according to UNI ISO 9906 grade 3B

8LMG 80

60 Hz - 3500 rpm				Q						
TYPE	P2		l/min	0	720	960	1200	1440	1680	1920
			l/sec	0	12	16	20	24	28	32
	HP	kW	m³/h	0	43,2	57,6	72	86,4	100,8	115,2
8LMG 80/01	12,5	9,2	H (m)	38	32	30	28	25	21	16
8LMG 80/02	25	18,5		76	64	60	56	50	42	32
8LMG 80/03	35	26		113	96	91	84	76	64	49
8LMG 80/04	50	37		151	128	121	112	101	85	65
8LMG 80/05	60	44		189	160	151	140	126	106	81
8LMG 80/06	75	55		227	192	181	167	151	127	97
8LMG 80/07	90	66		265	224	212	195	176	149	113
8LMG 80/08	100	75		302	256	242	223	202	170	130
8LMG 80/09	125	92		340	288	272	251	227	191	146
8LMG 80/10	125	92		378	320	302	279	252	212	162
8LMG 80/11	150	110		416	352	333	307	277	234	178
8LMG 80/12	150	110		454	384	363	335	302	255	194

Max Eff. % =	70
Max kW / St. =	8,82

NPSH (m)	Q=25%	Q=50%	Q=75%	Q=100%
	3	3	3,5	4,5

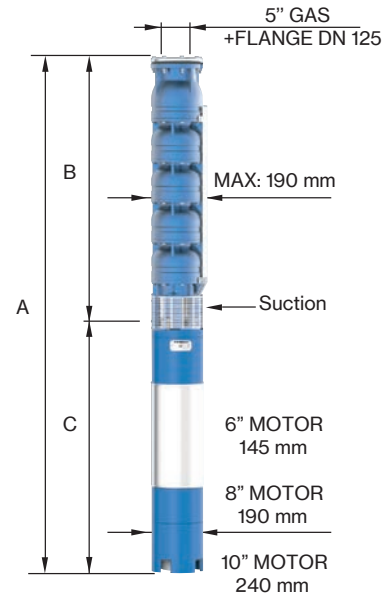

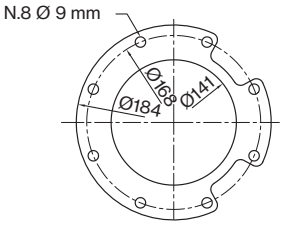

FOR COMMERCIAL TUBE
EXTERNAL DIAMETER: 139,7 mm

TYPE	MOTOR BRACKET	DIMENSIONS (mm)			WEIGHT (kg)	
		A	B	C	MOTOR	PUMP
8LMG 80/01-6	6" NEMA	1278	527	751	60	23
8LMG 80/02-6		1643	652	991	83	31
8LMG 80/03-6		1958	777	1181	100	39
8LMG 80/04-6		2243	902	1341	118	48
8LMG 80/05	8" NEMA	2150	1027	1123	178	56
8LMG 80/06		2385	1152	1233	200	64
8LMG 80/07		2580	1277	1303	214	73
8LMG 80/08		2785	1402	1383	230	81
8LMG 80/09		3110	1527	1583	270	89
8LMG 80/10		3235	1652	1583	270	98
8LMG 80/11		3510	1777	1733	300	106
8LMG 80/12		3635	1902	1733	300	114

Sand tolerance 50 g/m³
Tolerances according to UNI ISO 9906 grade 3B

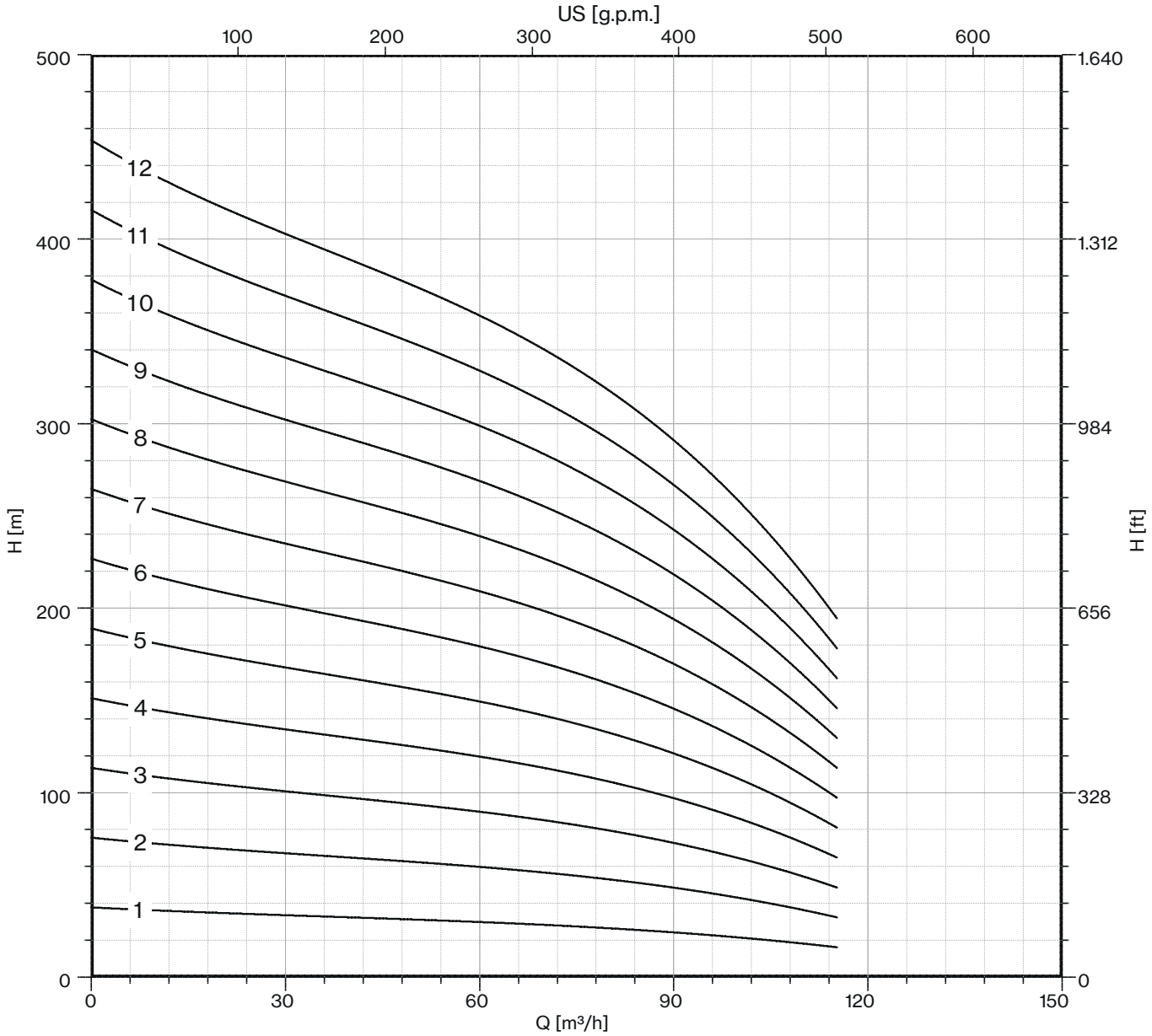
US [g.p.m.]
100
200
300
400
500
600
H [m]
500
400
300
200
100
0
H [ft]
1.640
1.312
984
656
328
0
12
11
10
9
8
7
6
5
4
3
2
1
0
30
60
90
120
150
Q [m³/h]

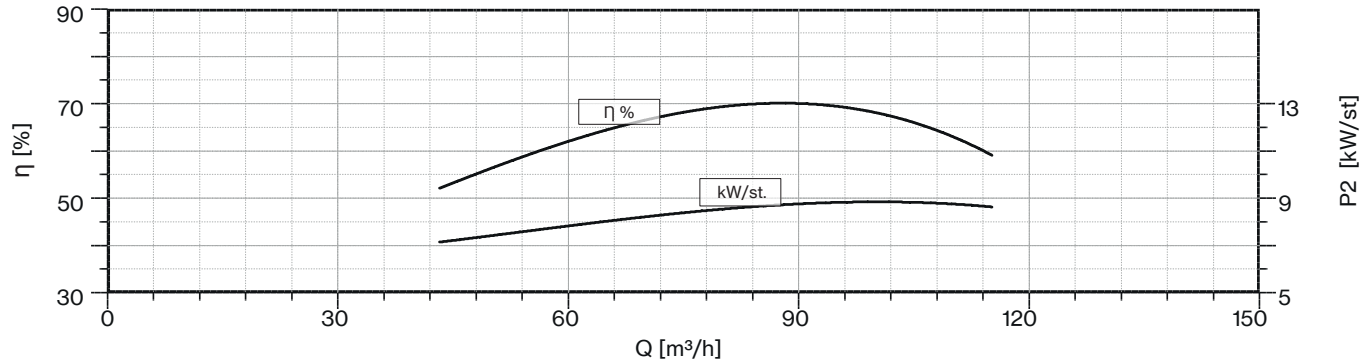
η [%]
90
70
50
30
P2 [kW/st]
13
9
5
η %
kW/st.
0
30
60
90
120
150
Q [m³/h]

8LMG 92

60 Hz - 3500 rpm				Q							
TYPE	P2		l/min	0	960	1200	1440	1680	1920	2160	2400
			l/sec	0	16	20	24	28	32	36	40
	HP	kW	m³/h	0	57,6	72	86,4	100,8	115,2	129,6	144
8LMG 92/01	15	11	H (m)	38	32	30	28	25	22	18	14
8LMG 92/02	30	22		76	64	60	56	50	44	36	28
8LMG 92/03	40	30		113	96	90	84	76	66	54	42
8LMG 92/04	60	45		151	127	120	112	101	88	72	56
8LMG 92/05	75	55		189	159	150	140	126	110	90	70
8LMG 92/06	90	66		227	191	180	168	151	132	108	84
8LMG 92/07	100	75		265	223	210	197	176	154	126	98
8LMG 92/08	125	92		302	255	240	225	202	176	144	112
8LMG 92/09	125	92		340	287	271	253	227	198	162	126
8LMG 92/10	150	110		378	319	301	281	252	220	180	140
8LMG 92/11	150	110		416	350	331	309	277	242	198	154

Max Eff. % =	70
Max kW / St. =	10,2

NPSH (m)	Q=25%	Q=50%	Q=75%	Q=100%
	3	4	5	8

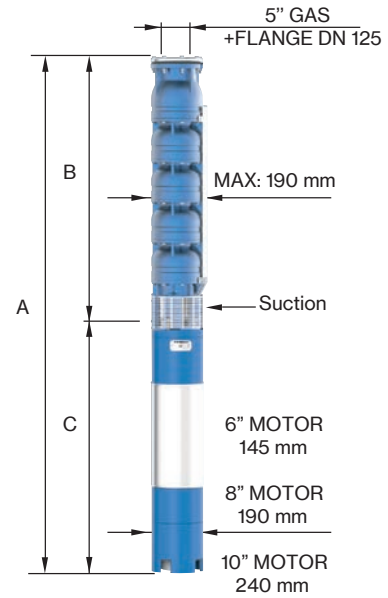

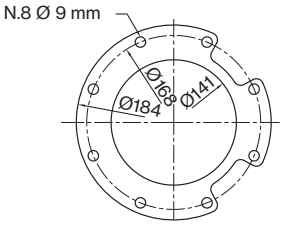

FOR COMMERCIAL TUBE
EXTERNAL DIAMETER: 139,7 mm

TYPE	MOTOR BRACKET	DIMENSIONS (mm)			WEIGHT (kg)	
		A	B	C	MOTOR	PUMP
8LMG 92/01-6	6" NEMA	1338	527	811	65	23
8LMG 92/02-6		1723	652	1071	92	31
8LMG 92/03-6		2028	777	1251	108	39
8LMG 92/04	8" NEMA	2025	902	1123	178	48
8LMG 92/05		2260	1027	1233	200	56
8LMG 92/06		2455	1152	1303	214	64
8LMG 92/07		2660	1277	1383	230	73
8LMG 92/08		2985	1402	1583	270	81
8LMG 92/09		3110	1527	1583	270	89
8LMG 92/10		3385	1652	1733	300	98
8LMG 92/11		3510	1777	1733	300	106

Sand tolerance 50 g/m³
Tolerances according to UNI ISO 9906 grade 3B

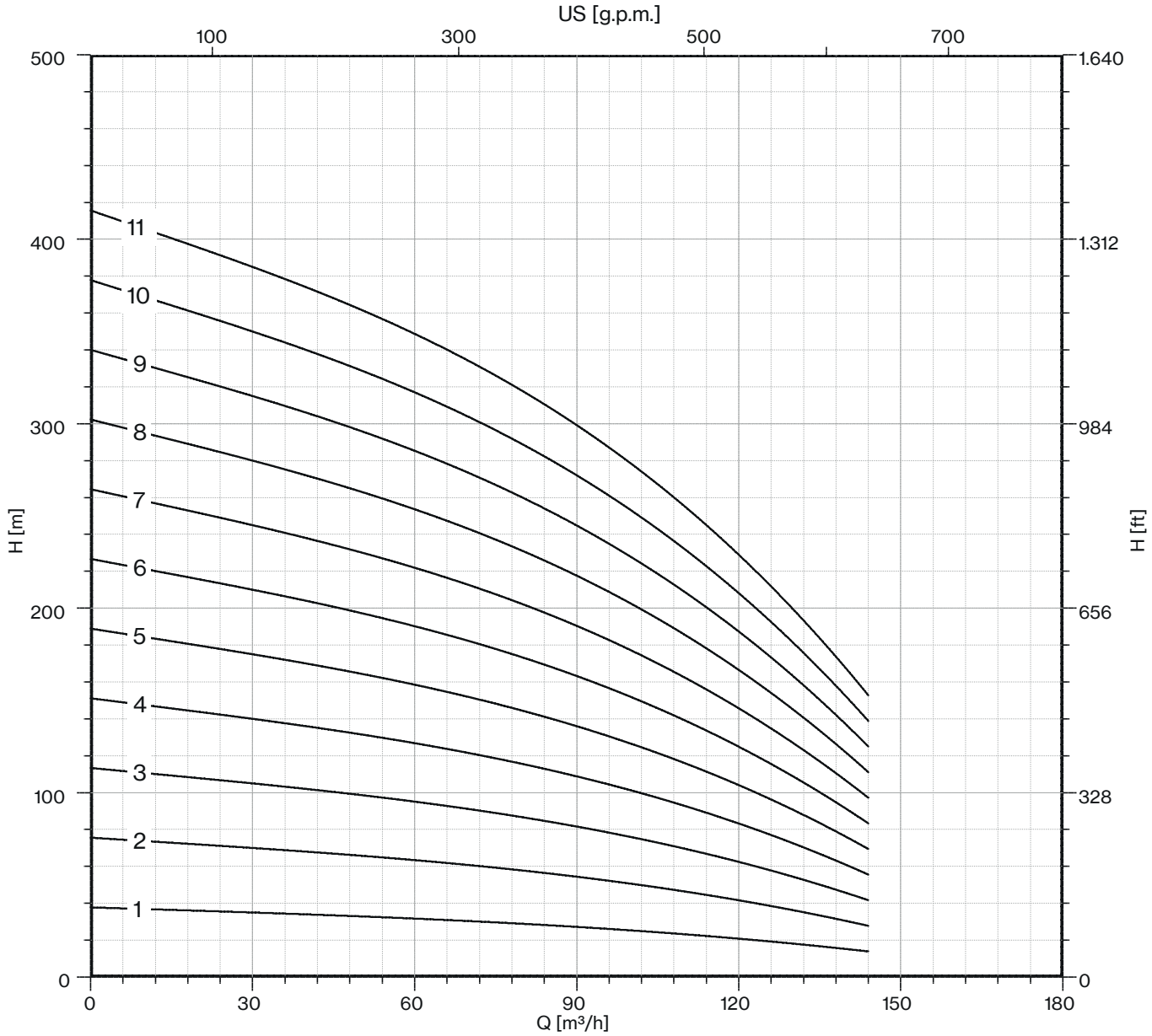
US [g.p.m.]
100
300
500
700
500
400
300
200
100
0
H [m]
1.640
1.312
984
656
328
0
H [ft]
11
10
9
8
7
6
5
4
3
2
1
0
30
60
90
120
150
180
Q [m³/h]

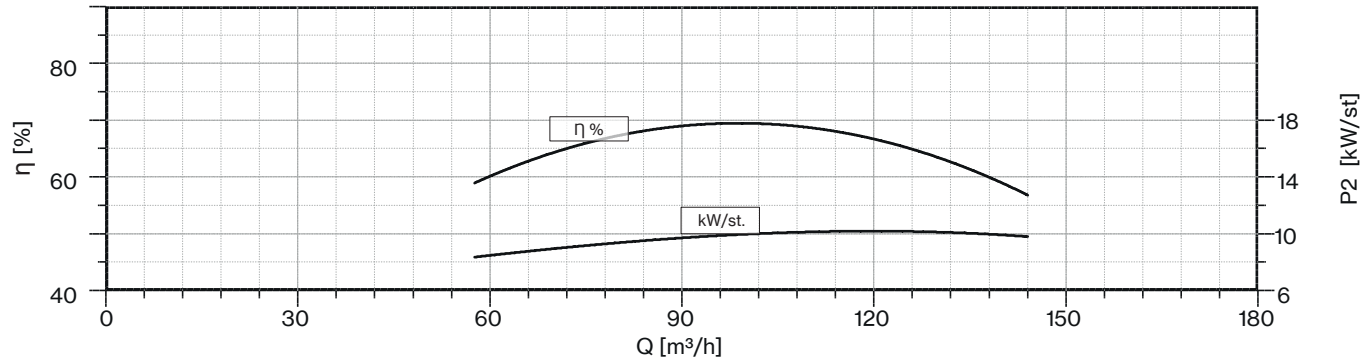
80
60
40
η [%]
η %
kW/st.
18
14
10
6
P2 [kW/st]
0
30
60
90
120
150
180
Q [m³/h]

8LMG 110

60 Hz - 3500 rpm				Q								
TYPE	P2		l/min	0	1200	1440	1680	1920	2160	2400	2640	2880
			l/sec	0	20	24	28	32	36	40	44	48
	HP	kW	m³/h	0	72	86,4	100,8	115,2	129,6	144	158,4	172,8
8LMG 110/01	17,5	13	H (m)	38	31	30	29	27	26	23	20	16
8LMG 110/02	35	26		76	63	60	58	55	51	46	40	32
8LMG 110/03	50	37		114	94	91	86	82	77	70	60	48
8LMG 110/04	75	55		151	126	121	115	109	102	93	80	64
8LMG 110/05	90	66		189	157	151	144	137	128	116	100	80
8LMG 110/06	100	75		227	189	181	173	164	153	139	120	96
8LMG 110/07	125	92		265	220	212	202	192	179	163	140	112
8LMG 110/08	150	110		303	252	242	230	219	204	186	160	128
8LMG 110/09	150	110		341	283	272	259	246	230	209	180	144

Max Eff. % =	74
Max kW / St. =	12,6

NPSH (m)	Q=25%	Q=50%	Q=75%	Q=100%
	2,5	3,5	4,5	8

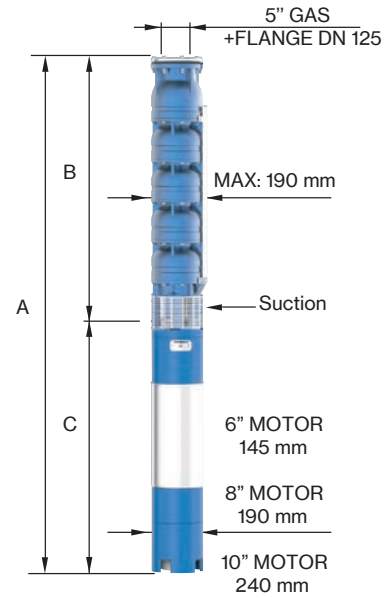

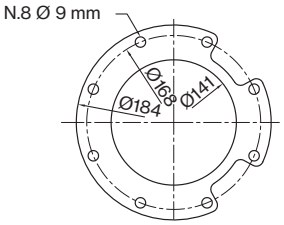

FOR COMMERCIAL TUBE
EXTERNAL DIAMETER: 139,7 mm

TYPE	MOTOR BRACKET	DIMENSIONS (mm)			WEIGHT (kg)	
		A	B	C	MOTOR	PUMP
8LMG 110/01-6	6" NEMA	1368	527	841	70	23
8LMG 110/02-6		1833	652	1181	100	32
8LMG 110/03-6		2118	777	1341	118	40
8LMG 110/04	8" NEMA	2135	902	1233	200	49
8LMG 110/05		2330	1027	1303	214	58
8LMG 110/06		2535	1152	1383	230	66
8LMG 110/07		2860	1277	1583	270	75
8LMG 110/08		3135	1402	1733	300	83
8LMG 110/09		3260	1527	1733	300	92

Sand tolerance 50 g/m³
Tolerances according to UNI ISO 9906 grade 3B

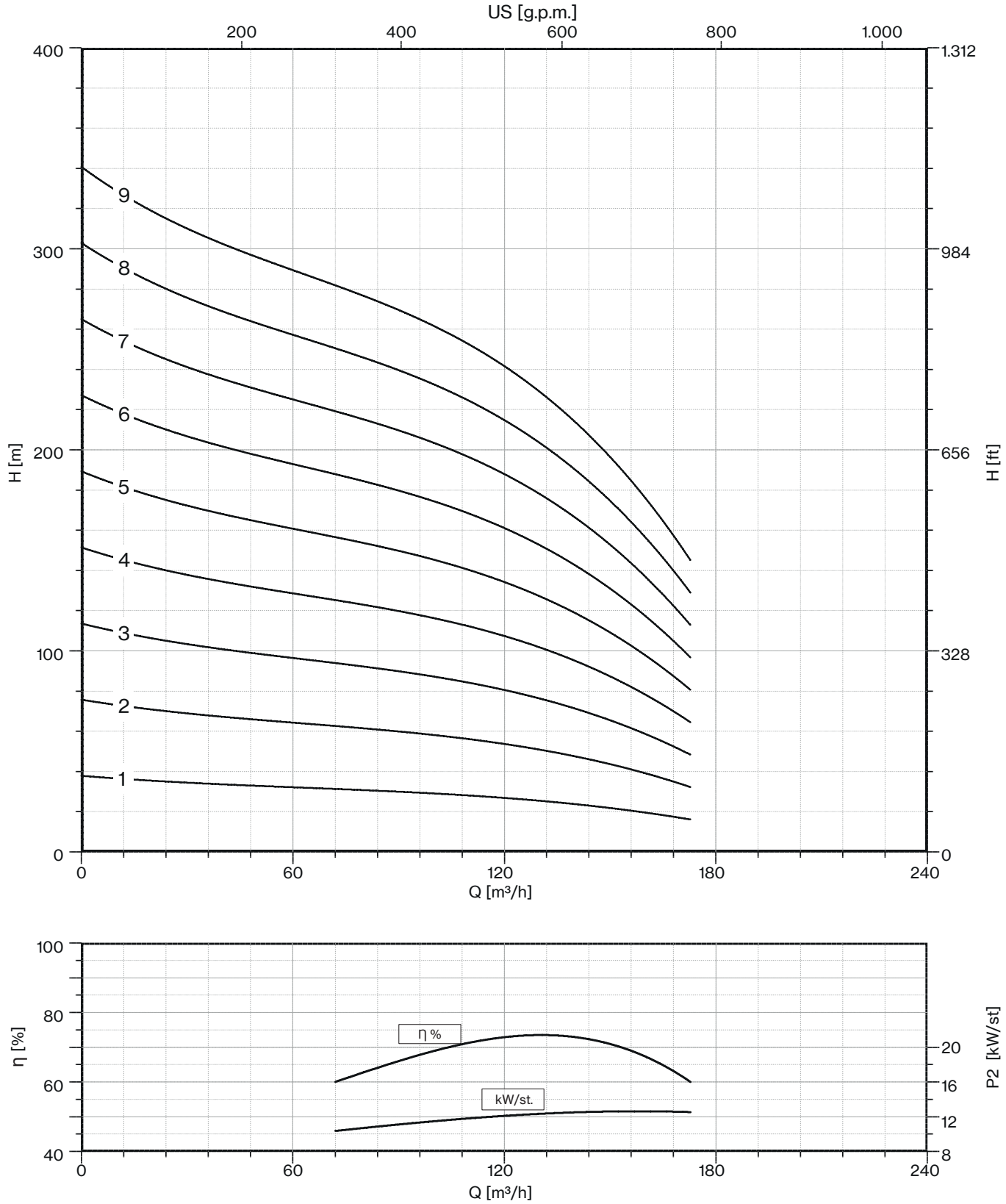
US [g.p.m.]
200
400
600
800
1.000
400
300
200
100
0
H [m]
1.312
984
656
328
0
H [ft]
9
8
7
6
5
4
3
2
1
0
60
120
180
240
Q [m³/h]
100
80
60
40
η [%]
η %
kW/st.
20
16
12
8
P2 [kW/st]
0
60
120
180
240
Q [m³/h]

8LMG 130

60 Hz - 3500 rpm				Q									
TYPE	P2		l/min	0	1440	1680	1920	2160	2400	2640	2880	3120	3360
			l/sec	0	24	28	32	36	40	44	48	52	56
	HP	kW	m³/h	0	86,4	100,8	115,2	129,6	144	158,4	172,8	187,2	201,6
8LMG 130/01	17,5	13	H (m)	38	30	29	28	26	24	22	19	15	11
8LMG 130/02	35	26		76	61	58	55	52	49	44	39	31	22
8LMG 130/03	60	45		114	91	88	83	78	73	67	58	46	33
8LMG 130/04	75	55		152	122	117	110	105	97	89	77	62	44
8LMG 130/05	90	66		190	152	146	138	131	121	111	97	77	55
8LMG 130/06	125	92		228	183	175	165	157	146	133	116	93	65
8LMG 130/07	125	92		266	213	204	193	183	170	156	135	108	76
8LMG 130/08	150	110		304	244	234	221	209	194	178	155	123	87

Max Eff. % =	75
Max kW / St. =	13,3

NPSH (m)	Q=25%	Q=50%	Q=75%	Q=100%
	2,5	3	5	9

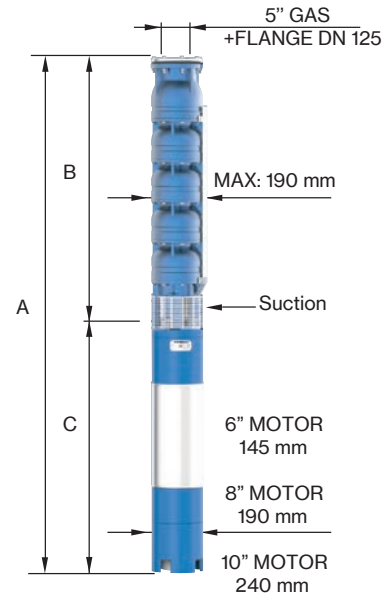

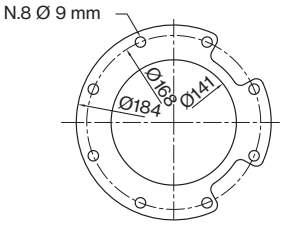

FOR COMMERCIAL TUBE
EXTERNAL DIAMETER: 139,7 mm

TYPE	MOTOR BRACKET	DIMENSIONS (mm)			WEIGHT (kg)	
		A	B	C	MOTOR	PUMP
8LMG 130/01-6	6" NEMA	1368	527	841	70	23
8LMG 130/02-6		1833	652	1181	100	32
8LMG 130/03	8" NEMA	1900	777	1123	178	41
8LMG 130/04		2135	902	1233	200	49
8LMG 130/05		2330	1027	1303	214	58
8LMG 130/06		2735	1152	1583	270	67
8LMG 130/07		2860	1277	1583	270	75
8LMG 130/08		3135	1402	1733	300	84

Sand tolerance 50 g/m³
Tolerances according to UNI ISO 9906 grade 3B

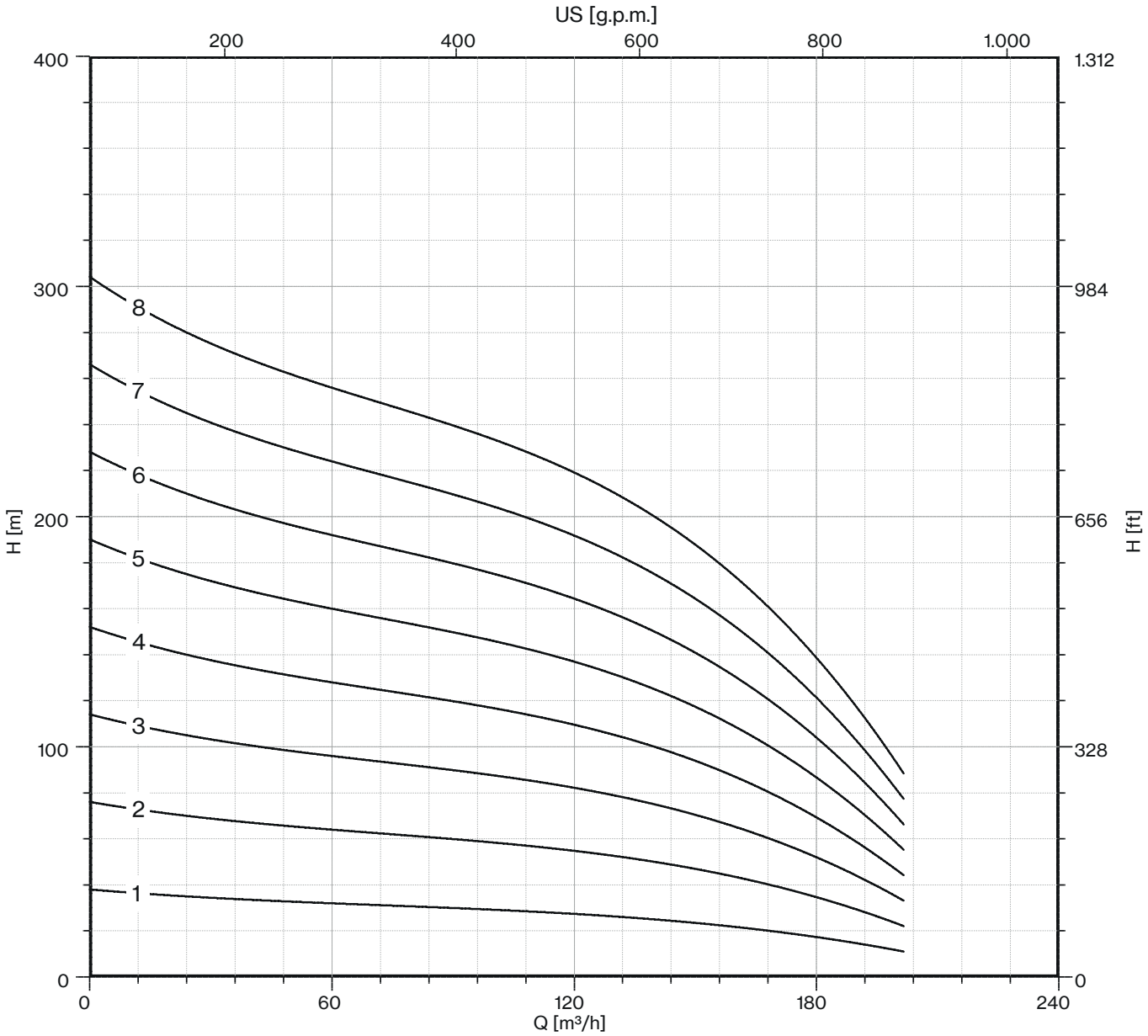
US [g.p.m.]
200
400
600
800
1.000
400
300
200
100
0
1.312
984
656
328
0
H [m]
H [ft]
8
7
6
5
4
3
2
1
0
60
120
180
240
Q [m³/h]

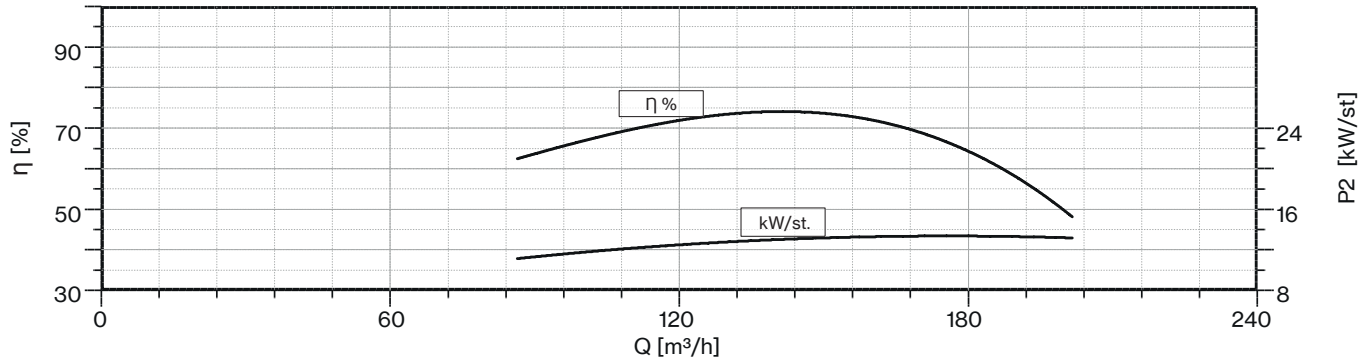
90
70
50
30
η [%]
η %
kW/st.
24
16
8
P2 [kW/st]
0
60
120
180
240
Q [m³/h]

8LMG 160

60 Hz - 3500 rpm				Q									
TYPE	P2		l/min	0	1920	2160	2400	2640	2880	3120	3360	3600	3840
			l/sec	0	32	36	40	44	48	52	56	60	64
	HP	kW	m³/h	0	115,2	129,6	144	158,4	172,8	187,2	201,6	216	230,4
8LMG 160/01	20	15	H (m)	35	27	26	25	24	23	21	19	17	14
8LMG 160/02	40	30		70	55	52	50	47	45	43	39	35	29
8LMG 160/03	60	45		105	82	78	75	71	68	64	58	52	43
8LMG 160/04	90	66		140	109	104	100	95	91	86	77	69	58
8LMG 160/05	100	75		175	137	130	124	118	113	107	97	86	72
8LMG 160/06	125	92		210	164	156	149	142	136	128	116	104	86
8LMG 160/07	150	110		245	192	181	174	166	158	150	135	121	101

Max Eff. % =	74
Max kW / St. =	14,9

NPSH (m)	Q=25%	Q=50%	Q=75%	Q=100%
	4	4,5	7	13

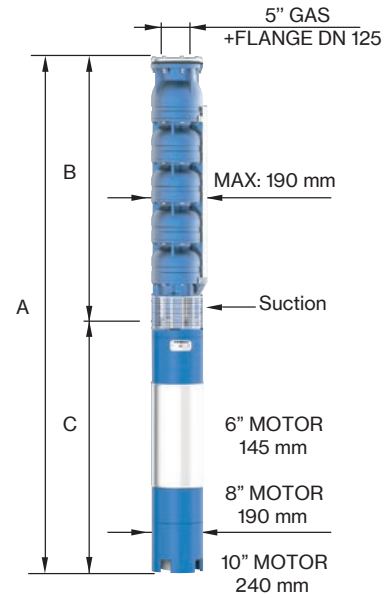

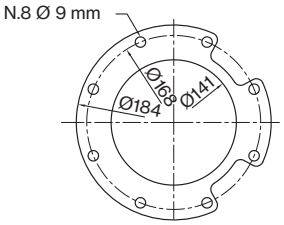

FOR COMMERCIAL TUBE
EXTERNAL DIAMETER: 139,7 mm

TYPE	MOTOR BRACKET	DIMENSIONS (mm)			WEIGHT (kg)	
		A	B	C	MOTOR	PUMP
8LMG 160/01-6	6" NEMA	1483	552	931	75	24
8LMG 160/02-6		1953	702	1251	108	33
8LMG 160/03	8" NEMA	1975	852	1123	178	42
8LMG 160/04		2305	1002	1303	214	51
8LMG 160/05		2535	1152	1383	230	60
8LMG 160/06		2885	1302	1583	270	69
8LMG 160/07		3185	1452	1733	300	78

Sand tolerance 50 g/m³
Tolerances according to UNI ISO 9906 grade 3B

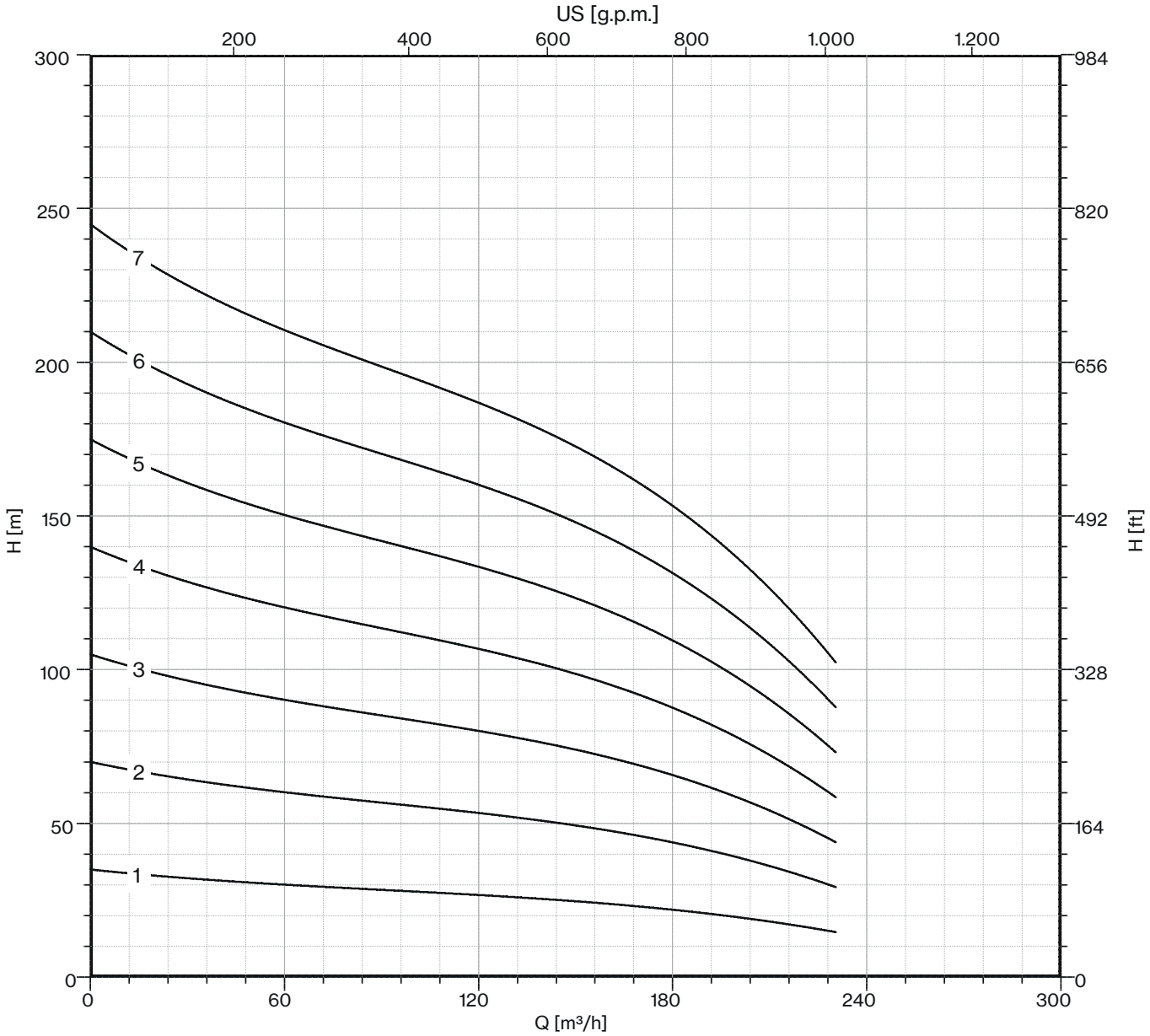
US [g.p.m.]
200
400
600
800
1.000
1.200
H [m]
300
250
200
150
100
50
0
H [ft]
984
820
656
492
328
164
0
7
6
5
4
3
2
1
0
60
120
180
240
300
Q [m³/h]

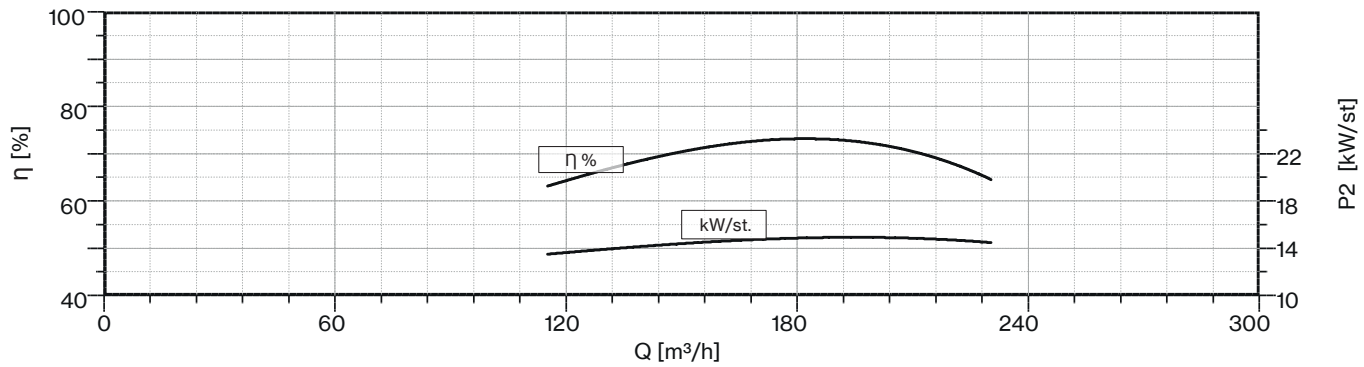
η [%]
100
80
60
40
P2 [kW/st]
22
18
14
10
η %
kW/st.
0
60
120
180
240
300
Q [m³/h]

10LMG 190

60 Hz - 3500 rpm				Q						
TYPE	P2		l/min	0	2160	2460	3120	3600	4080	4560
			l/sec	0	36	44	52	60	68	76
	HP	kW	m³/h	0	129,6	158,4	187,2	216	244,8	273,5
10LMG 190/01DR20	40	30		47	42	40	36	34	29	23
10LMG 190/01DR10	40	30		53	48	45	41	39	32	26
10LMG 190/01	50	37		60	53	50	46	43	36	29
10LMG 190/02DR20	75	55		93	84	79	73	69	57	46
10LMG 190/02DR10	90	66		105	95	90	82	77	65	51
10LMG 190/02	90	66		120	107	101	92	86	72	58
10LMG 190/03DR20	125	92		140	126	119	109	103	86	68
10LMG 190/03DR10	125	92		158	143	135	124	116	97	77
10LMG 190/03	150	110	H	180	160	151	138	130	108	86
10LMG 190/04DR20	150	110	(m)	187	168	159	145	137	114	91
10LMG 190/04DR10	175	130		211	190	180	165	154	129	103
10LMG 190/04	200	150		240	213	202	184	173	144	115
10LMG 190/05DR20	200	150		233	210	199	181	171	143	114
10LMG 190/05DR10	225	165		264	238	225	206	193	161	128
10LMG 190/05	225	165		300	266	252	230	216	180	144
10LMG 190/06DR20	225	165		280	252	238	218	206	171	137
10LMG 190/06DR10	250	185		316	285	270	247	232	194	154
10LMG 190/06	300	220		359	320	302	276	259	216	173

Max Eff. % DR20 =	74
Max Eff. % DR10 =	75
Max Eff. % =	75,5
Max kW / St. DR20 =	27,2
Max kW / St. DR10 =	30,3
Max kW / St. =	33.6

NPSH (m)	Q=25%	Q=50%	Q=75%	Q=100%
	3,6	5,3	8,1	14

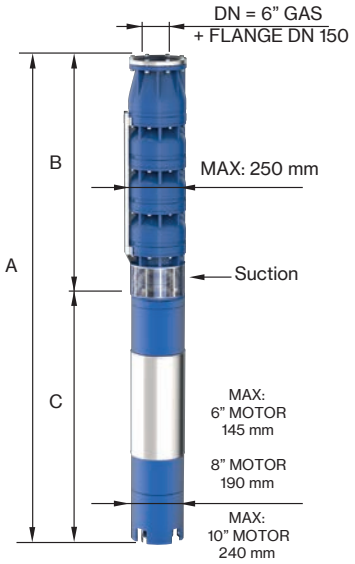

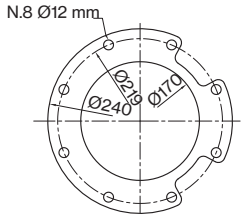

FOR COMMERCIAL TUBE
EXTERNAL DIAMETER: 168,3 mm

TYPE	MOTOR BRACKET	DIMENSIONS (mm)			WEIGHT (kg)	
		A	B	C	MOTOR	PUMP
10LMG 190/01DR20-6		1618	625	993	150	50
10LMG 190/01DR10-6	6" NEMA	1618	625	993	150	50
10LMG 190/01-6		1668	625	1043	160	50
10LMG 190/02DR20-8		2038	805	1233	200	68
10LMG 190/02DR10-8		2108	805	1303	214	68
10LMG 190/02-8		2108	805	1303	214	68
10LMG 190/03DR20-8	8" NEMA	2568	985	1583	270	87
10LMG 190/03DR10-8		2568	985	1583	270	87
10LMG 190/03-8		2718	985	1733	300	87
10LMG 190/04DR20-8		2898	1165	1733	300	105
10LMG 190/04DR10		2799	1165	1634	385	105
10LMG 190/04		2899	1165	1734	415	105
10LMG 190/05DR20		3079	1345	1734	415	124
10LMG 190/05DR10	10"	3199	1345	1854	444	124
10LMG 190/05		3199	1345	1854	444	124
10LMG 190/06DR20		3379	1525	1854	444	142
10LMG 190/06DR10		3509	1525	1984	480	142
10LMG 190/06-12	12"	3635	1525	2110	700	142

"DR" : reduced-diameter impellers

Sand tolerance 50 g/m³
Tolerances according to UNI ISO 9906 grade 3B

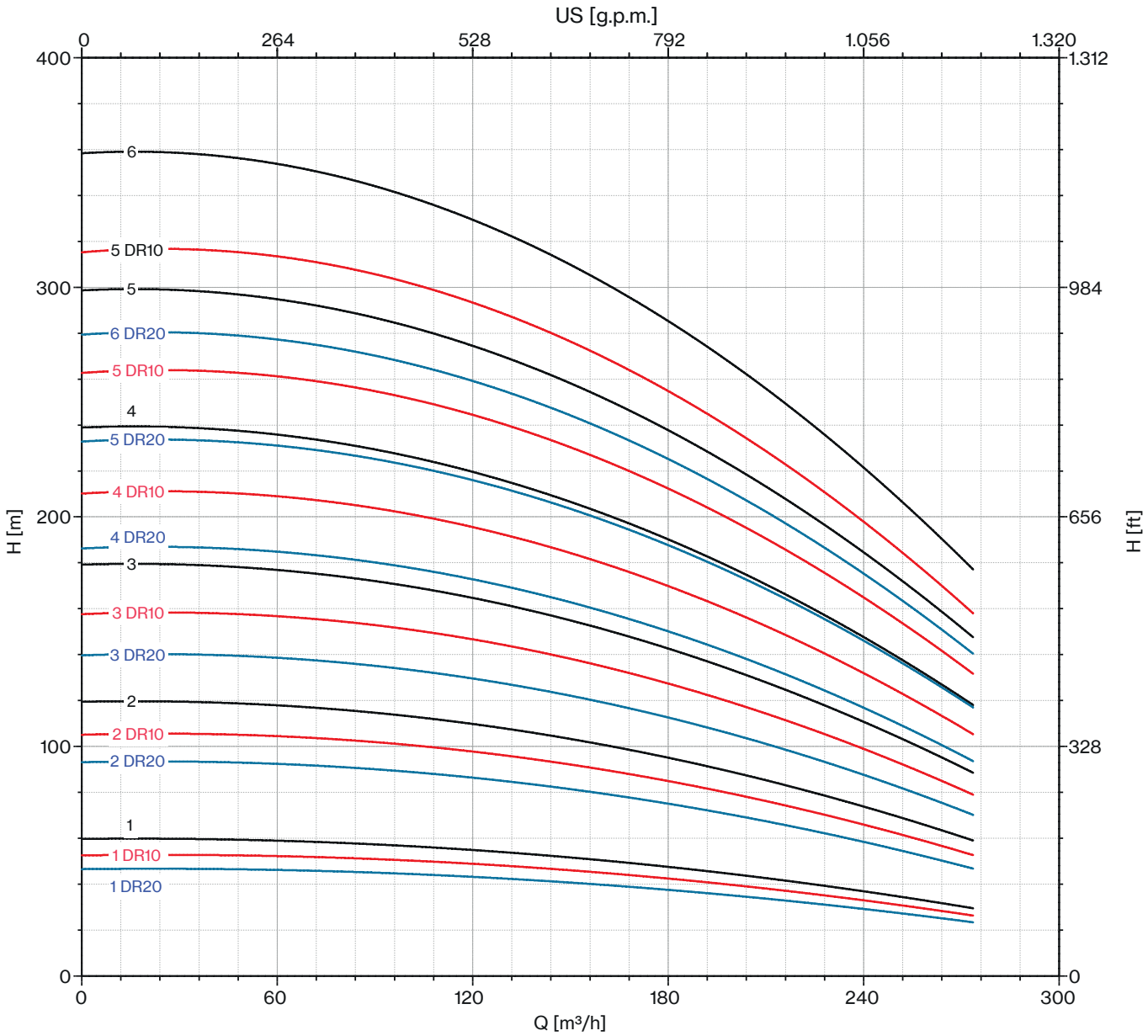
US [g.p.m.]
0
264
528
792
1.056
1.320
1.312
984
656
328
0
400
300
200
100
0
H [m]
H [ft]
6
5 DR10
5
6 DR20
5 DR10
4
5 DR20
4 DR10
4 DR20
3
3 DR10
3 DR20
2
2 DR10
2 DR20
1
1 DR10
1 DR20
0
60
120
180
240
300
Q [m³/h]

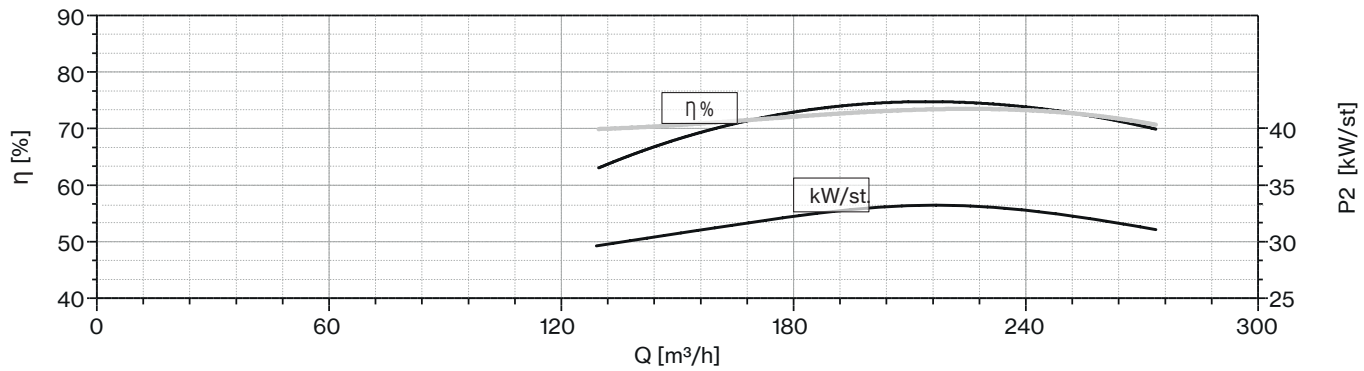
90
80
70
60
50
40
η [%]
η %
kW/st.
40
35
30
25
P2 [kW/st]
0
60
120
180
240
300
Q [m³/h]

10LMG 230

60 Hz - 3500 rpm				Q							
TYPE	P2		l/min	0	2640	3120	3600	4080	4560	5040	5280
	HP	kW	l/sec	0	44	52	60	68	76	84	88
10LMG 230/01DR20	50	37		49	42	40	37	34	32	27	24
10LMG 230/01DR10	50	37		55	48	45	42	39	36	31	25
10LMG 230/01	60	45		62	53	50	48	43	40	35	32
10LMG 230/02DR20	90	66		98	84	79	75	69	64	55	47
10LMG 230/02DR10	100	75		111	95	90	85	77	72	62	50
10LMG 230/02	125	92		124	107	101	95	86	81	69	63
10LMG 230/03DR20	125	92		147	126	119	112	103	96	82	71
10LMG 230/03DR10	150	110		166	143	135	127	116	108	92	75
10LMG 230/03	175	130	H	186	160	151	143	130	121	104	95
10LMG 230/04DR20	175	130	(m)	196	168	159	150	137	128	109	94
10LMG 230/04DR10	200	150		221	190	180	169	154	144	123	100
10LMG 230/04	225	165		248	213	202	190	173	161	138	127
10LMG 230/05DR20	225	165		245	210	199	187	171	160	137	118
10LMG 230/05DR10	250	185		276	238	225	212	193	180	154	125
10LMG 230/05	300	220		310	266	252	238	216	202	173	158
10LMG 230/06DR20	300	220		294	252	238	225	206	192	164	142
10LMG 230/06DR10	300	220		332	285	270	254	232	216	185	150
10LMG 230/06	340	250		372	320	302	285	259	242	207	190

Max Eff. % DR20 =	75,5
Max Eff. % DR10 =	76
Max Eff. % =	76,5
Max kW / St. DR20 =	35,5
Max kW / St. DR10 =	31,7
Max kW / St. =	39,8

NPSH (m)	Q=25%	Q=50%	Q=75%	Q=100%
	3,7	5,4	8,3	14,2

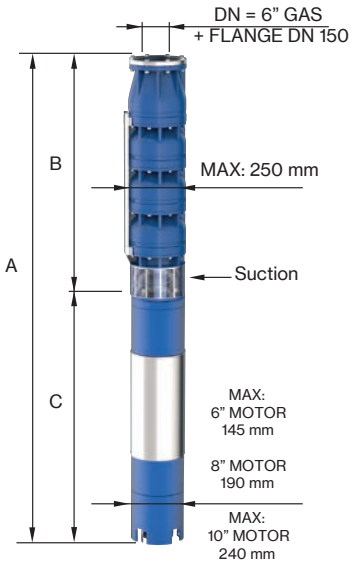

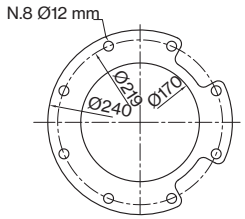

FOR COMMERCIAL TUBE
EXTERNAL DIAMETER: 168,3 mm

TYPE	MOTOR BRACKET	DIMENSIONS (mm)			WEIGHT (kg)	
		A	B	C	MOTOR	PUMP
10LMG 230/01DR20-6	6" NEMA	1668	625	1043	160	50
10LMG 230/01DR10-6		1668	625	1043	160	50
10LMG 230/01-8	8" NEMA	1748	625	1123	178	50
10LMG 230/02DR20-8		2108	805	1303	214	68
10LMG 230/02DR10-8		2188	805	1383	230	68
10LMG 230/02-8		2388	805	1583	270	68
10LMG 230/03DR20-8		2568	985	1583	270	87
10LMG 230/03DR10-8		2718	985	1733	300	87
10LMG 230/03	10"	2619	985	1634	385	87
10LMG 230/04DR20		2799	1165	1634	385	105
10LMG 230/04DR10		2899	1165	1734	415	105
10LMG 230/04		3019	1165	1854	444	105
10LMG 230/05DR20		3199	1345	1854	444	124
10LMG 230/05DR10		3329	1345	1984	480	124
10LMG 230/05-12	12"	3455	1345	2110	700	124
10LMG 230/06DR20-12		3635	1525	2110	700	142
10LMG 230/06DR10-12		3635	1525	2110	700	142
10LMG 230/06-12		3805	1525	2280	775	142

"DR" : reduced-diameter impellers

Sand tolerance 50 g/m³
Tolerances according to UNI ISO 9906 grade 3B

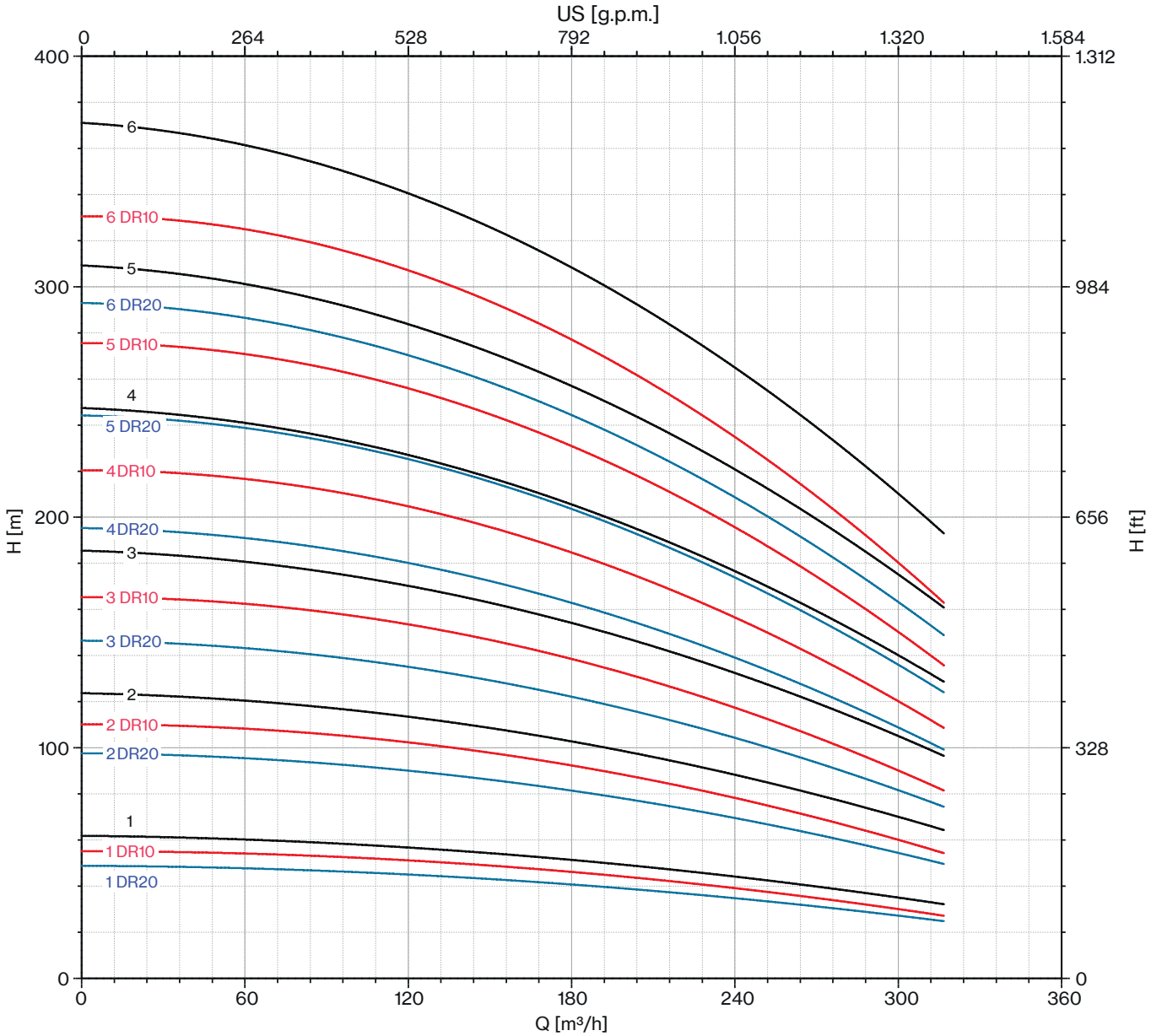
US [g.p.m.]
0
264
528
792
1.056
1.320
1.584
400
300
200
100
0
1.312
984
656
328
0
H [m]
H [ft]
6
6 DR10
5
6 DR20
5 DR10
4
5 DR20
4 DR10
4 DR20
3
3 DR10
3 DR20
2
2 DR10
2 DR20
1
1 DR10
1 DR20
0
60
120
180
240
300
360
Q [m³/h]

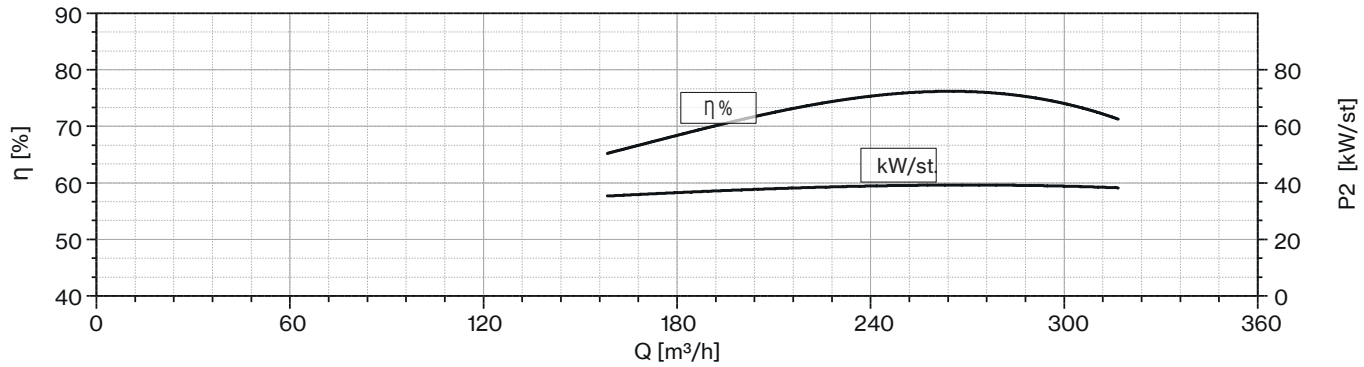
90
80
70
60
50
40
η [%]
η %
kW/st
80
60
40
20
0
P2 [kW/st]
0
60
120
180
240
300
360
Q [m³/h]

10LMG 250

60 Hz - 3500 rpm				Q								
TYPE	P2		l/min	0	2880	3360	3840	4320	4800	5280	5760	6000
			l/sec	0	48	56	64	72	80	88	96	100
	HP	kW	m³/h	0	172,8	201,6	230,4	259,1	287,9	316,8	345,5	359,9
10LMG 250/01DR20	50	37		49	41	39	38	35	32	30	26	25
10LMG 250/01DR10	60	45		55	46	44	42	40	36	33	29	28
10LMG 250/01	60	45		62	52	49	48	45	40	37	33	32
10LMG 250/02DR20	100	75		98	82	78	75	71	64	59	52	50
10LMG 250/02DR10	125	92		111	92	88	85	79	72	67	59	56
10LMG 250/02	125	92		124	104	98	95	89	81	75	66	63
10LMG 250/03DR20	150	110		147	123	117	113	106	96	89	79	75
10LMG 250/03DR10	175	130		166	138	131	127	119	108	100	88	85
10LMG 250/03	200	150	H (m)	186	156	147	143	134	121	112	99	95
10LMG 250/04DR20	225	165		196	164	156	151	142	128	119	105	100
10LMG 250/04DR10	225	165		221	184	175	169	159	144	134	118	113
10LMG 250/04	250	185		248	207	196	190	179	161	150	132	127
10LMG 250/05DR20	300	220		245	204	194	189	177	160	148	131	125
10LMG 250/05DR10	300	220		276	230	219	212	199	180	167	147	141
10LMG 250/05	340	250		310	259	245	238	223	202	187	166	158
10LMG 250/06DR20	340	250		294	245	233	226	213	192	178	157	150
10LMG 250/06DR10	340	250		332	276	263	254	238	216	200	176	169
10LMG 250/06	400	300		372	311	294	285	268	242	225	199	190

Max Eff. % DR20 =	75,5
Max Eff. % DR10 =	76
Max Eff. % =	76,5
Max kW / St. DR20 =	37,9
Max kW / St. DR10 =	40,7
Max kW / St. =	45,5

NPSH (m)	Q=25%	Q=50%	Q=75%	Q=100%
	3,9	5,5	8,5	14,4

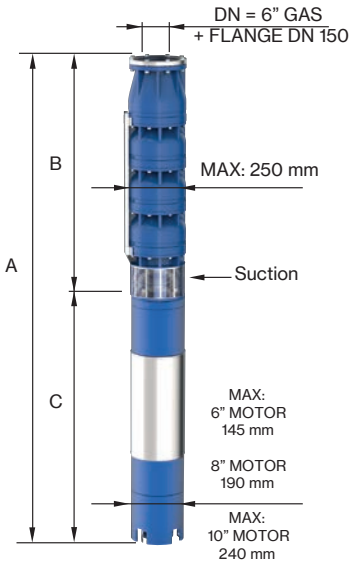

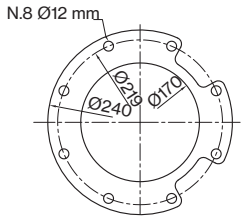

FOR COMMERCIAL TUBE
EXTERNAL DIAMETER: 168,3 mm

TYPE	MOTOR BRACKET	DIMENSIONS (mm)			WEIGHT (kg)	
		A	B	C	MOTOR	PUMP
10LMG 250/01DR20-6	6" NEMA	1668	625	1043	160	50
10LMG 250/01DR10-8	8" NEMA	1748	625	1123	178	50
10LMG 250/01-8		1748	625	1123	178	50
10LMG 250/02DR20-8		2188	805	1383	230	68
10LMG 250/02DR10-8		2388	805	1583	270	68
10LMG 250/02-8		2388	805	1583	270	68
10LMG 250/03DR20-8		2718	985	1733	300	87
10LMG 250/03DR10	10"	2619	985	1634	385	87
10LMG 250/03		2719	985	1734	415	87
10LMG 250/04DR20		3019	1165	1854	444	105
10LMG 250/04DR10		3019	1165	1854	444	105
10LMG 250/04		3149	1165	1984	480	105
10LMG 250/05DR20-12	12"	3455	1345	2110	700	124
10LMG 250/05DR10-12		3455	1345	2110	700	124
10LMG 250/05-12		3625	1345	2280	775	124
10LMG 250/06DR20-12		3805	1525	2280	775	142
10LMG 250/06DR10-12		3805	1525	2280	775	142
10LMG 250/06-14	14"	3805	1525	2280	775	142

"DR" : reduced-diameter impellers

Sand tolerance 50 g/m³
Tolerances according to UNI ISO 9906 grade 3B

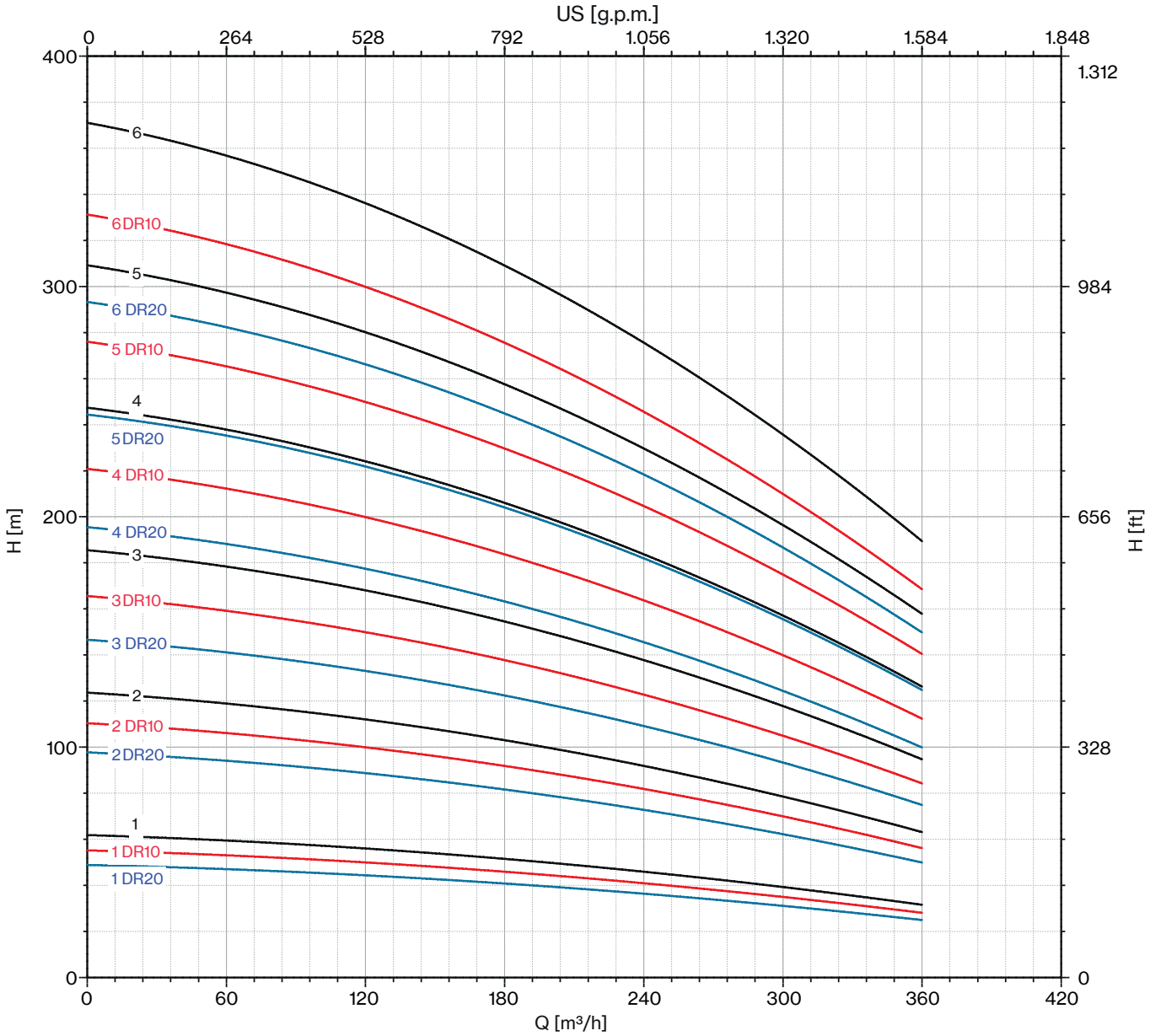
US [g.p.m.]
0
264
528
792
1.056
1.320
1.584
1.848
1.312
984
656
328
0
400
300
200
100
0
H [m]
H [ft]
6
6 DR10
5
6 DR20
5 DR10
4
5 DR20
4 DR10
4 DR20
3
3 DR10
3 DR20
2
2 DR10
2 DR20
1
1 DR10
1 DR20
0
60
120
180
240
300
360
420
Q [m³/h]

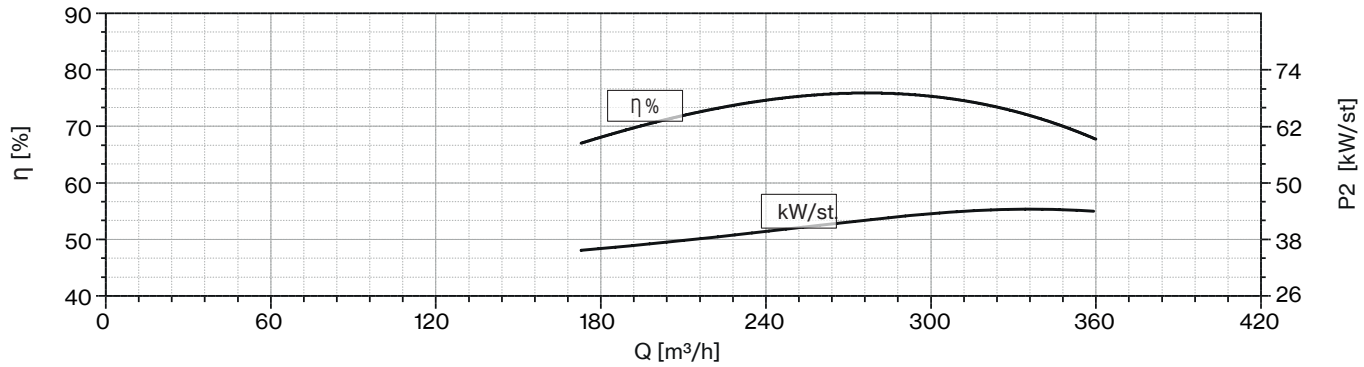
90
80
70
60
50
40
η [%]
74
62
50
38
26
P2 [kW/st]
η %
kW/st
0
60
120
180
240
300
360
420
Q [m³/h]

6-8-10 LMG

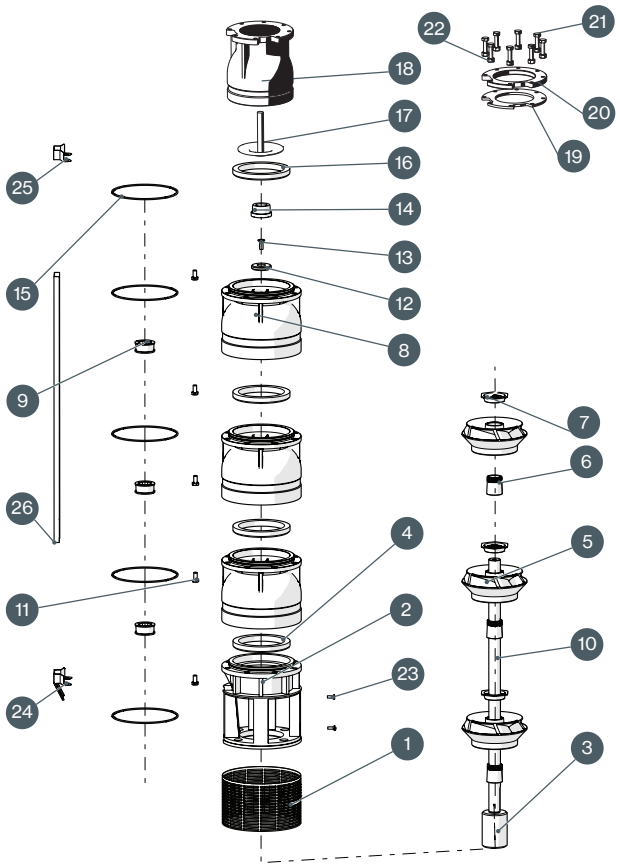

N. CODE	DESCRIPTION	MATERIAL
1	**SUCTION STRAINER**	AISI 304
2	**SUCTION CAGE**	CAST IRON
3	**JOINT**	AISI 304
4	**USURY RING**	NBR
5	**IMPELLER**	CAST IRON
6	**CONE**	AISI 304
7	**HEXAGONAL RING**	AISI 304
8	**DIFFUSEUR**	AISI 304
9	**BEARING BUSH**	NBR
10	**PUMP SHAFT**	AISI 304
11	**N.8 SCREW FOR DIFFUSEUR**	AISI 304
12	**RING**	AISI 304
13	**SCREW FOR DISK**	AISI 304
14	**COUNTERTHRUST**	PTFE + 25% CARBON
15	**O-RING**	NBR
16	**GASKET VALVE**	NBR
17	**CAP VALVE**	AISI 304
18	**BODY VALVE**	CAST IRON
19	**SEAL COUNTERFLANGE**	NBR
20	**COUNTERFLANGE**	IRON
21	**N.8 SCREW FOR COUNTERFLANGE**	AISI 304
22	**N.8 NUT FOR COUNTERFLANGE**	AISI 304
23	**N.2 SCREW FOR SUCTION STRAINER**	AISI 304
24	**LOWER FLANGE**	AISI 304
25	**UPPER FLANGE**	AISI 304
26	**COVER CABLE**	AISI 304

6LRH & 6LM line

Submersible Well Pumps

Submersible Multistage Centrifugal Pumps for 6” Wells.
The 6LRH line is a radial type execution, while the 6LM one is a semi-axial type. These pumps feature a check valve integrated into the delivery outlet. The pump motor bracket is designed in compliance with NEMA standards. All components are constructed from stainless steel using lost wax microfusion technology.
The standard material is AISI 304 stainless steel. Alternatively, the following materials are available upon request: AISI 316 stainless steel and Duplex steel (EN 1.4462). The bushing bearings and wear rings are made from sand abrasion-resistant rubber, while the reverse-thrust ring is crafted from PTFE/Graphite.
These pumps are ideal for a variety of applications, including civil and agricultural use.

General operating data:

- Capacity up to 108 m³/h
- Pressure up to 631 m
- Hydraulic efficiency 6”, up to 78,5%
- Powers up to 44 kW
- Rotation speed 3.600 rpm
- Maximum depth: 350 m
- Maximum quantity of sand: 100 gr/m³
- Drinking water compatibility according to DM174 MEI >= 0,4 (EU directive No.547/2012)
- Performance tolerance: ISO9906-3B

Construction features	
Suction and delivery outlet	stainless steel AISI 304 (LRHS-LMS) stainless steel AISI 316 (LRHX-LMX) Duplex EN 1.4462 (LRHD-LMD)
Valve	stainless steel AISI 304 (LRHS-LMS) stainless steel AISI 316 (LRHX-LMX) Duplex EN 1.4462 (LRHD-LMD)
Impellers and diffusers	stainless steel AISI 304 (LRHS-LMS) stainless steel AISI 316 (LRHX-LMX) Duplex EN 1.4462 (LRHD-LMD)
Upper bushings	NBR rubber
Shaft pump side	stainless steel AISI 304 (LRHS-LMS) stainless steel AISI 316 (LRHX-LMX) Duplex EN 1.4462 (LRHD-LMD)
Quantity of sand in the water	max 100 g/m³

Motor	
Asynchronous 2 pole	rewindable water cooled
Insulation class	Y (max 30 °C) - PPC winding type F (max 50 °C) - PE2+PA or LPE winding type
Protection degree	IP68
Liquid temperature	max 30 °C (max 50 °C on request)
Depth of immersion	max 350 m

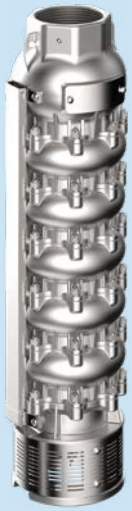

6LRH line

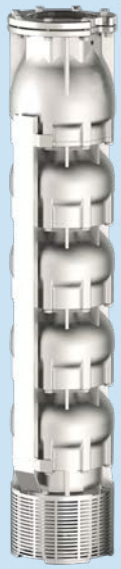

6LM line

6LRH 14

60 Hz - 3500 rpm				Q							
TYPE	P2		l/min	0	120	180	240	300	360	420	480
			l/sec	0,0	2,0	3,0	4,0	5,0	6,0	7,0	8,0
	HP	kW	m³/h	0	7	11	14	18	22	25	29
6LRH 14/01	2	1,5	H (m)	21	20	19	18	17	15	13	10
6LRH 14/02	4	3		42	40	38	36	33	30	25	20
6LRH 14/03	5,5	4		63	60	57	54	50	45	38	29
6LRH 14/04	7,5	5,5		84	79	76	72	67	60	51	39
6LRH 14/05	10	7,5		105	99	95	90	84	76	63	49
6LRH 14/06	10	7,5		126	119	114	108	100	91	76	59
6LRH 14/07	12,5	9,2		147	139	133	126	117	106	89	69
6LRH 14/08	15	11		168	159	152	144	134	121	101	78
6LRH 14/09	15	11		189	179	171	162	150	136	114	88
6LRH 14/10	17,5	13		210	199	190	180	167	151	127	98
6LRH 14/11	17,5	13		161	152	145	138	128	116	97	75
6LRH 14/12	20	15		252	238	228	216	200	181	152	118
6LRH 14/13	25	18,5		273	258	247	234	217	197	165	127
6LRH 14/14	25	18,5		294	278	266	252	234	212	177	137
6LRH 14/15	25	18,5		315	298	285	270	251	227	190	147

Max Eff. % =	74
Max kW / St. =	1,23

NPSH (m)	Q=25%	Q=50%	Q=75%	Q=100%
	3	3	4	6

TYPE	MOTOR BRACKET	DIMENSIONS (mm)			WEIGHT (kg)	
		A	B	C	MOTOR	PUMP
6LRH 14/01-4	4" NEMA	687	302	385	10,4	11
6LRH 14/02-4		787	369	418	12,8	15
6LRH 14/03-4		904	436	468	15,3	20
6LRH 14/04-4		1041	503	538	18,6	24
6LRH 14/05	6" NEMA	1271	570	701	55	28
6LRH 14/06		1338	637	701	55	32
6LRH 14/07		1455	704	751	60	36
6LRH 14/08		1582	771	811	65	40
6LRH 14/09		1649	838	811	65	44
6LRH 14/10		1746	905	841	70	49
6LRH 14/11		1813	972	841	70	53
6LRH 14/12		1970	1039	931	75	57
6LRH 14/13		2097	1106	991	83	61
6LRH 14/14		2164	1173	991	83	65
6LRH 14/15		2231	1240	991	83	69

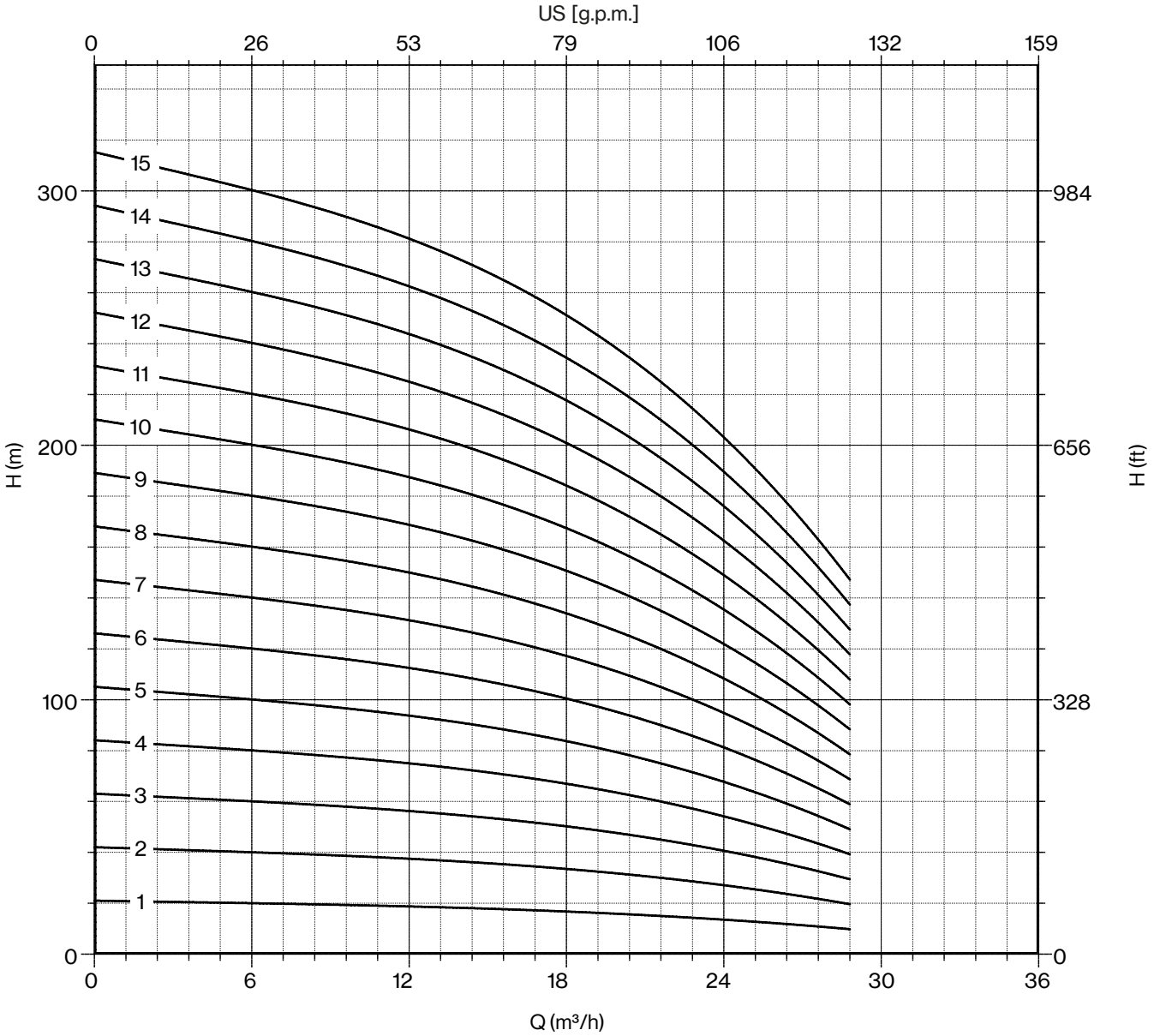
US [g.p.m.]
0
26
53
79
106
132
159
15
14
13
12
11
10
9
8
7
6
5
4
3
2
1
300
200
100
0
984
656
328
0
H (m)
H (ft)
0
6
12
18
24
30
36
Q (m³/h)

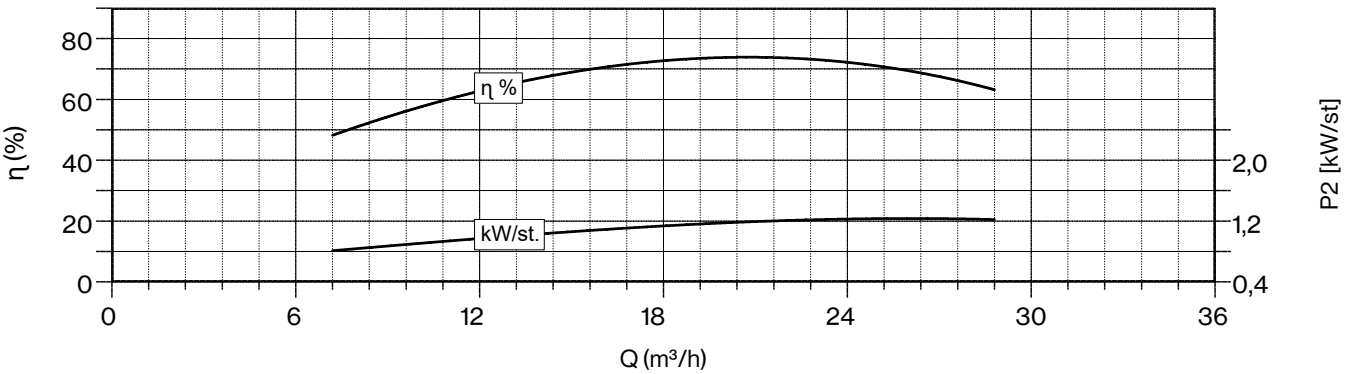
80
60
40
20
0
η (%)
η %
kW/st.
2,0
1,2
0,4
P2 [kW/st]
0
6
12
18
24
30
36
Q (m³/h)

6LRH 14

60 Hz - 3500 rpm				Q							
TYPE	P2		l/min	0	120	180	240	300	360	420	480
			l/sec	0,0	2,0	3,0	4,0	5,0	6,0	7,0	8,0
	HP	kW	m³/h	0	7	11	14	18	22	25	29
6LRH 14/16	30	22	H (m)	336	318	304	288	267	242	203	157
6LRH 14/17	30	22		357	338	323	306	284	257	215	166
6LRH 14/18	30	22		378	358	342	324	301	272	228	176
6LRH 14/19	35	26		399	378	361	342	317	287	241	186
6LRH 14/20	35	26		420	397	380	360	334	302	253	196
6LRH 14/21	35	26		442	417	399	378	351	318	266	206
6LRH 14/22	40	30		463	437	418	396	367	333	279	215
6LRH 14/23	40	30		484	457	437	414	384	348	291	225
6LRH 14/24	40	30		505	477	456	432	401	363	304	235
6LRH 14/25	40	30		526	497	475	450	418	378	317	245
6LRH 14/26	50	37		547	517	494	468	434	393	329	255
6LRH 14/27	50	37		568	537	513	486	451	408	342	264
6LRH 14/28	50	37		589	556	532	504	468	423	355	274
6LRH 14/29	50	37		610	576	551	522	484	438	367	284
6LRH 14/30	50	37		631	596	570	540	501	454	380	294

Max Eff. % =	74
Max kW / St. =	1,23

NPSH (m)	Q=25%	Q=50%	Q=75%	Q=100%
	3	3	4	6

TYPE	MOTOR BRACKET	DIMENSIONS (mm)			WEIGHT (kg)	
		A	B	C	MOTOR	PUMP
6LRH 14/16	6" NEMA	2378	1307	1071	92	74
6LRH 14/17		2445	1374	1071	92	78
6LRH 14/18		2512	1441	1071	92	82
6LRH 14/19		2689	1508	1181	100	86
6LRH 14/20		2756	1575	1181	100	90
6LRH 14/21		2823	1642	1181	100	94
6LRH 14/22		2960	1709	1251	108	98
6LRH 14/23		3027	1776	1251	108	103
6LRH 14/24		3094	1843	1251	108	107
6LRH 14/25		3161	1910	1251	108	111
6LRH 14/26		3318	1977	1341	118	115
6LRH 14/27		3385	2044	1341	118	119
6LRH 14/28		3452	2111	1341	118	123
6LRH 14/29		3519	2178	1341	118	127
6LRH 14/30		3586	2245	1341	118	132

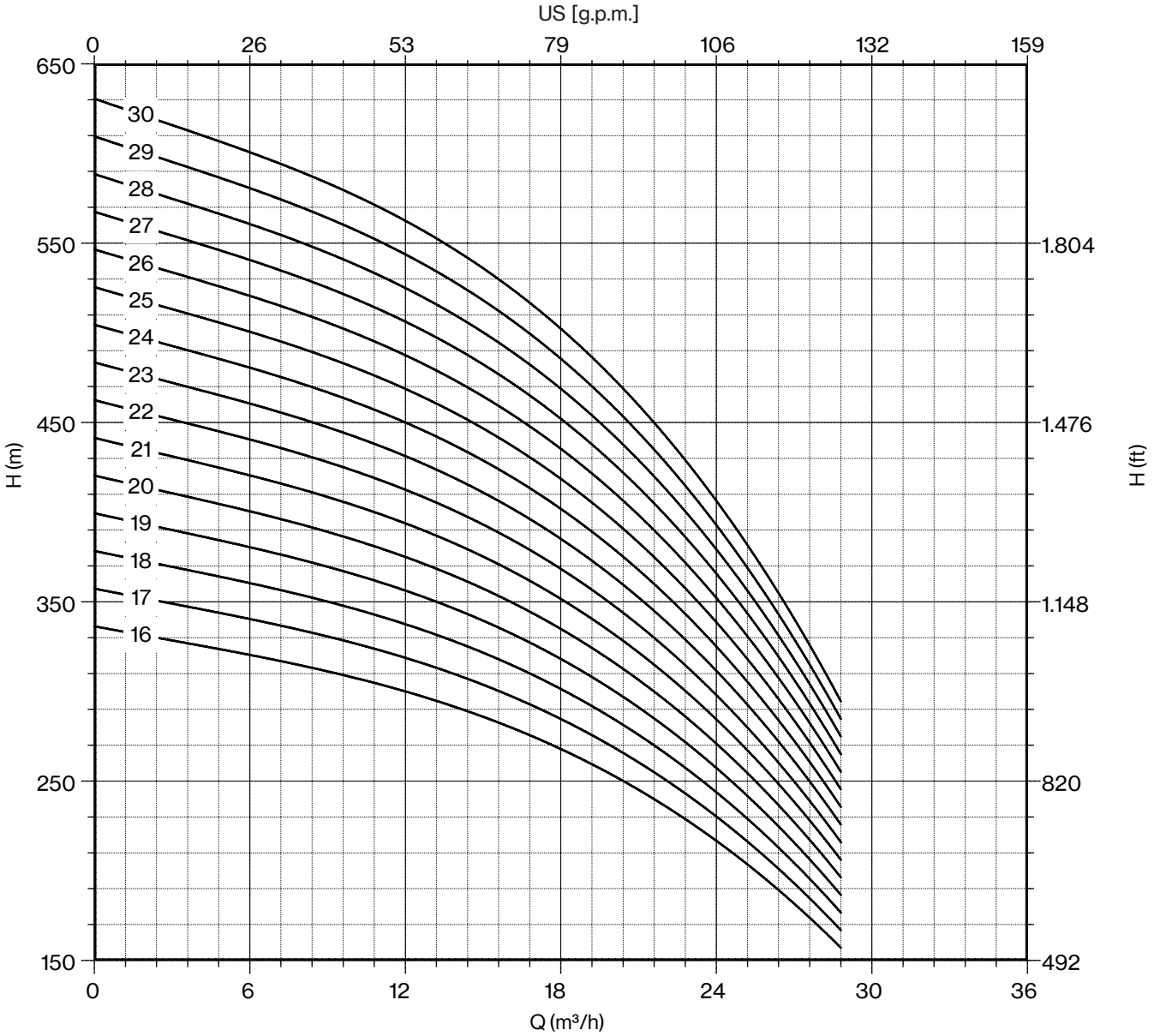
US [g.p.m.]
0
26
53
79
106
132
159
650
550
450
350
250
150
H (m)
1.804
1.476
1.148
820
492
H (ft)
30
29
28
27
26
25
24
23
22
21
20
19
18
17
16
0
6
12
18
24
30
36
Q (m³/h)

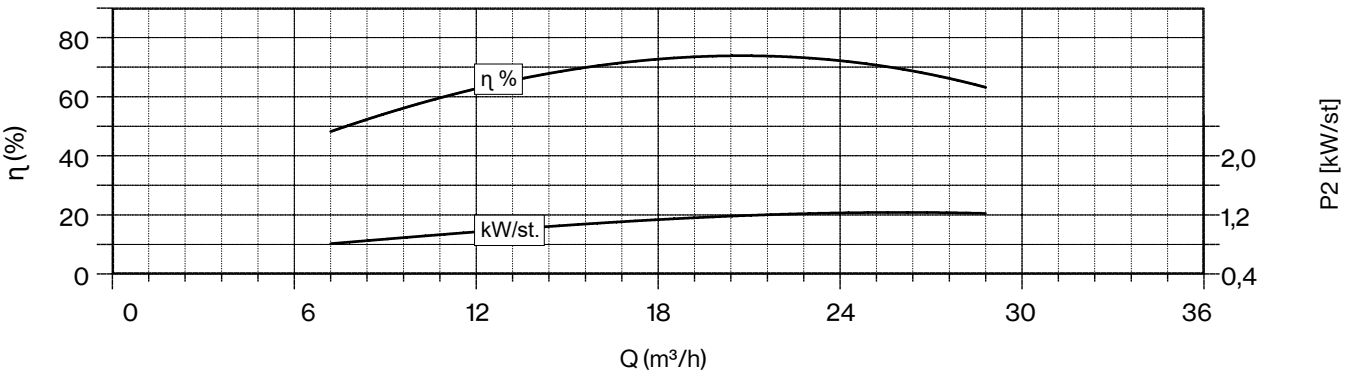
80
60
40
20
0
η (%)
η %
kW/st.
2,0
1,2
0,4
P2 [kW/st]
0
6
12
18
24
30
36
Q (m³/h)

6LRH 20

60 Hz - 3500 rpm				Q								
TYPE	P2		l/min	0	180	240	300	360	420	480	540	600
			l/sec	0,0	3,0	4,0	5,0	6,0	7,0	8,0	9,0	10,0
	HP	kW	m³/h	0	11	14	18	22	25	29	32	36
6LRH 20/01	3	2,2	H (m)	21	20	20	19	18	16	15	13	10
6LRH 20/02	5,5	4		42	41	39	38	36	33	29	25	20
6LRH 20/03	7,5	5,5		63	61	59	57	54	49	44	38	30
6LRH 20/04	10	7,5		84	81	78	76	71	65	58	50	40
6LRH 20/05	12,5	9,2		104	102	98	95	89	81	73	63	50
6LRH 20/06	12,5	9,2		125	122	118	114	107	98	87	75	60
6LRH 20/07	15	11		146	142	137	133	125	114	102	88	71
6LRH 20/08	17,5	13		167	162	157	152	143	130	116	100	81
6LRH 20/09	20	15		188	183	176	171	161	146	131	113	91
6LRH 20/10	25	18,5		209	203	196	190	179	163	145	125	101
6LRH 20/11	25	18,5		230	223	215	209	196	179	160	138	111
6LRH 20/12	30	22		251	244	235	228	214	195	175	150	121
6LRH 20/13	30	22		271	264	255	247	232	212	189	163	131
6LRH 20/14	30	22		292	284	274	266	250	228	204	175	141
6LRH 20/15	35	26		313	305	294	285	268	244	218	188	151
6LRH 20/16	35	26		334	325	313	304	286	260	233	200	161
6LRH 20/17	40	30		355	345	333	323	304	277	247	213	171
6LRH 20/18	40	30		376	365	353	342	321	293	262	226	181
6LRH 20/19	40	30		397	386	372	361	339	309	276	238	192
6LRH 20/20	50	37		418	406	392	380	357	325	291	251	202
6LRH 20/21	50	37		438	426	411	399	375	342	305	263	212
6LRH 20/22	50	37		459	447	431	418	393	358	320	276	222
6LRH 20/23	50	37		480	467	450	437	411	374	335	288	232

Max Eff. % =	76
Max kW / St. =	1,6

NPSH (m)	Q=25%	Q=50%	Q=75%	Q=100%
	3	3	4	6

TYPE	MOTOR BRACKET	DIMENSIONS (mm)			WEIGHT (kg)	
		A	B	C	MOTOR	PUMP
6LRH 20/01-4	4" NEMA	722	302	420	12	11
6LRH 20/02-4		837	369	468	15,3	15
6LRH 20/03-4		974	436	538	18,6	20
6LRH 20/04	6" NEMA	1204	503	701	55	24
6LRH 20/05		1321	570	751	60	28
6LRH 20/06		1388	637	751	60	32
6LRH 20/07		1515	704	811	65	36
6LRH 20/08		1612	771	841	70	40
6LRH 20/09		1769	838	931	75	44
6LRH 20/10		1896	905	991	83	49
6LRH 20/11		1963	972	991	83	53
6LRH 20/12		2110	1039	1071	92	57
6LRH 20/13		2177	1106	1071	92	61
6LRH 20/14		2244	1173	1071	92	65
6LRH 20/15		2421	1240	1181	100	69
6LRH 20/16		2488	1307	1181	100	74
6LRH 20/17		2625	1374	1251	108	78
6LRH 20/18		2692	1441	1251	108	82
6LRH 20/19		2759	1508	1251	108	86
6LRH 20/20		2916	1575	1341	118	90
6LRH 20/21		2983	1642	1341	118	94
6LRH 20/22		3050	1709	1341	118	98
6LRH 20/23		3117	1776	1341	118	103

** Coupled pump shaft*

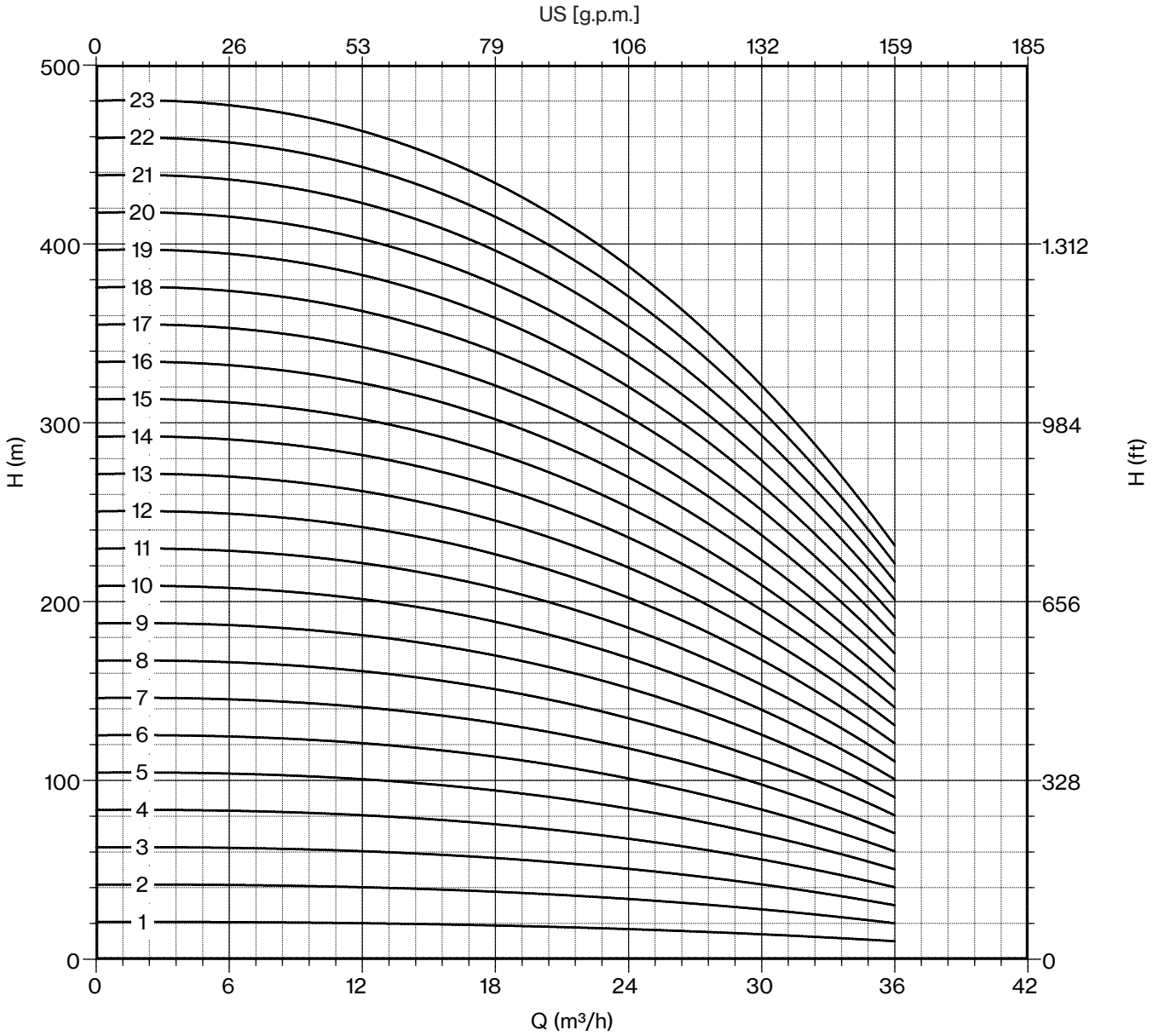
US [g.p.m.]
0
26
53
79
106
132
159
185
500
400
300
200
100
0
H (m)
1.312
984
656
328
0
H (ft)
23
22
21
20
19
18
17
16
15
14
13
12
11
10
9
8
7
6
5
4
3
2
1
0
6
12
18
24
30
36
42
Q (m³/h)

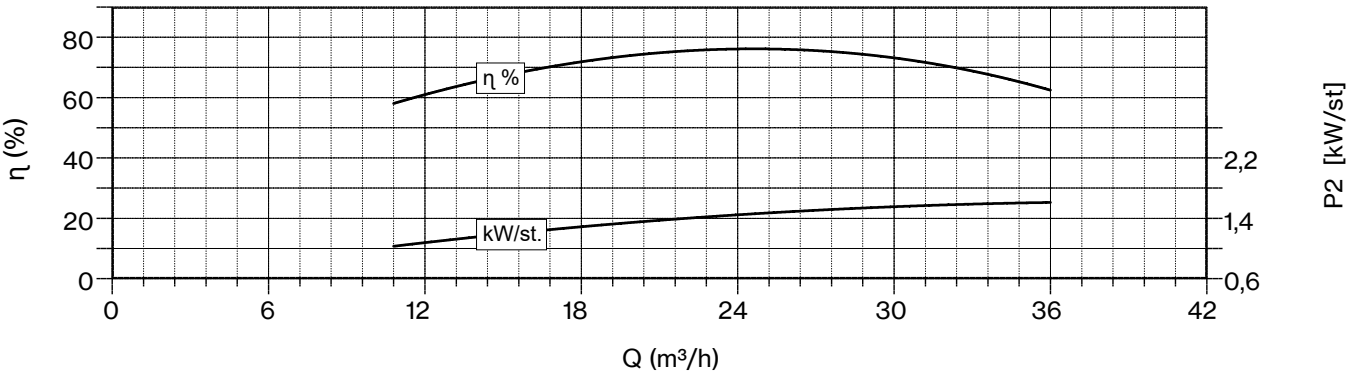
80
60
40
20
0
η (%)
η %
kW/st.
2,2
1,4
0,6
P2 [kW/st]
0
6
12
18
24
30
36
42
Q (m³/h)

6LRH 25

60 Hz - 3500 rpm				Q									
TYPE	P2		l/min	0	240	300	360	420	480	540	600	660	720
			l/sec	0,0	4,0	5,0	6,0	7,0	8,0	9,0	10,0	11,0	12,0
	HP	kW	m³/h	0	14	18	22	25	29	32	36	40	43
6LRH 25/01	3	2,2	H (m)	21	21	20	20	19	18	16	15	13	12
6LRH 25/02	5,5	4		43	42	41	39	37	35	33	30	26	23
6LRH 25/03	10	7,5		64	63	61	59	56	53	49	44	40	35
6LRH 25/04	12,5	9,2		85	84	81	78	75	70	65	59	53	47
6LRH 25/05	15	11		107	104	102	98	94	88	81	74	66	58
6LRH 25/06	17,5	13		128	125	122	118	112	105	98	89	79	70
6LRH 25/07	20	15		149	146	142	137	131	123	114	104	93	82
6LRH 25/08	25	18,5		170	167	162	157	150	141	130	119	106	93
6LRH 25/09	25	18,5		192	188	183	176	168	158	146	133	119	105
6LRH 25/10	30	22		213	209	203	196	187	176	163	148	132	117
6LRH 25/11	30	22		234	230	223	215	206	193	179	163	146	128
6LRH 25/12	35	26		256	251	244	235	225	211	195	178	159	140
6LRH 25/13	35	26		277	271	264	255	243	228	212	193	172	152
6LRH 25/14	40	30		298	292	284	274	262	246	228	208	185	163
6LRH 25/15	40	30		320	313	305	294	281	264	244	222	199	175
6LRH 25/16	50	37		341	334	325	313	300	281	260	237	212	187
6LRH 25/17	50	37		362	355	345	333	318	299	277	252	225	198
6LRH 25/18	50	37		384	376	365	353	337	316	293	267	238	210
6LRH 25/19	50	37		405	397	386	372	356	334	309	282	252	222

Max Eff. % =	78,5
Max kW / St. =	2

NPSH (m)	Q=25%	Q=50%	Q=75%	Q=100%
	3	3	4,5	6,6

TYPE	MOTOR BRACKET	DIMENSIONS (mm)			WEIGHT (kg)	
		A	B	C	MOTOR	PUMP
6LRH 25/01-4	4" NEMA	722	302	420	12	11
6LRH 25/02-4		837	369	468	15,3	15
6LRH 25/03	6" NEMA	1137	436	701	55	20
6LRH 25/04		1254	503	751	60	24
6LRH 25/05		1381	570	811	65	28
6LRH 25/06		1478	637	841	70	32
6LRH 25/07		1635	704	931	75	36
6LRH 25/08		1762	771	991	83	40
6LRH 25/09		1829	838	991	83	44
6LRH 25/10		1976	905	1071	92	49
6LRH 25/11		2043	972	1071	92	53
6LRH 25/12		2220	1039	1181	100	57
6LRH 25/13		2287	1106	1181	100	61
6LRH 25/14		2424	1173	1251	108	65
6LRH 25/15		2491	1240	1251	108	69
6LRH 25/16		2648	1307	1341	118	74
6LRH 25/17		2715	1374	1341	118	78
6LRH 25/18		2782	1441	1341	118	82
6LRH 25/19		2849	1508	1341	118	86

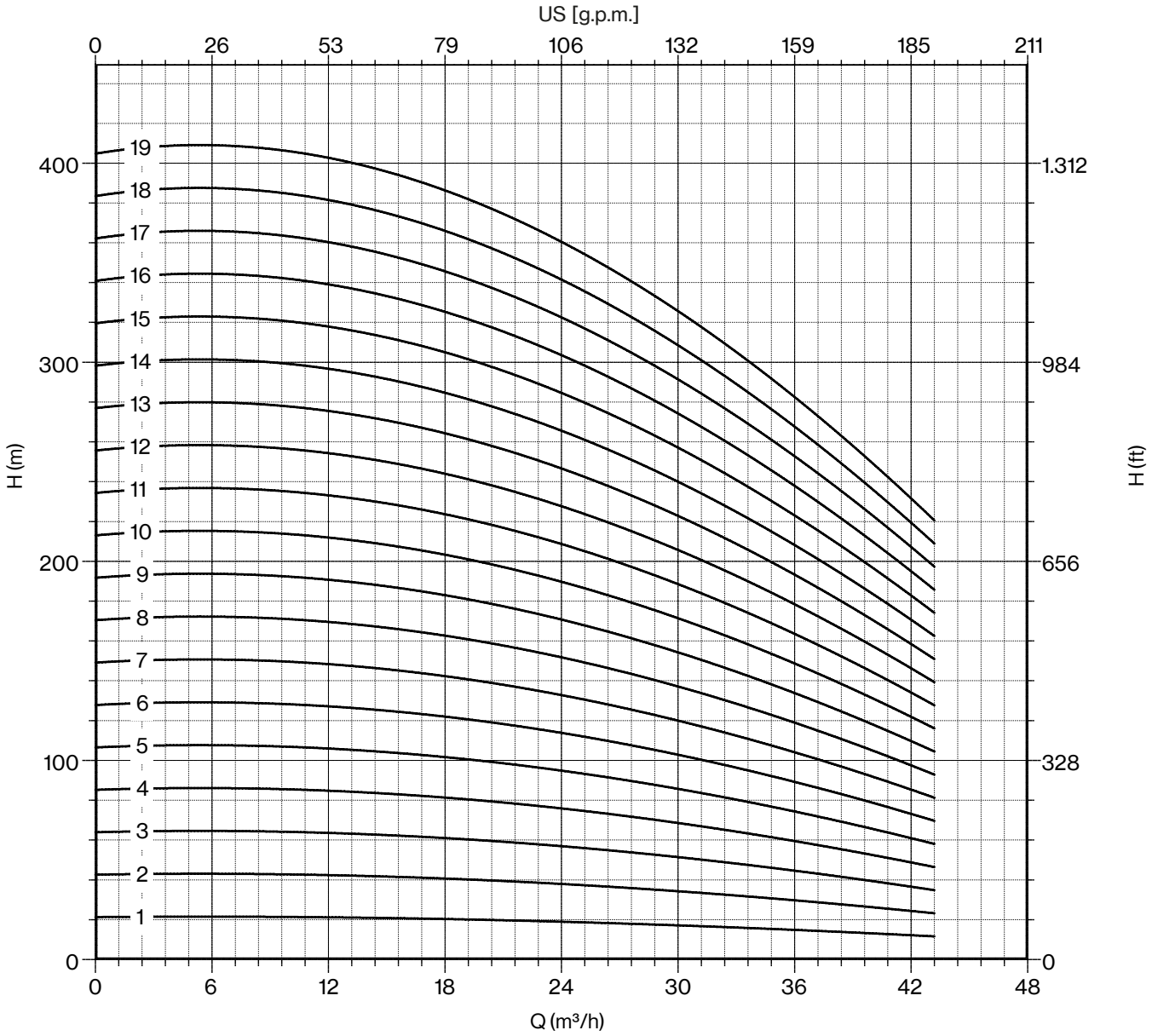
US [g.p.m.]
0
26
53
79
106
132
159
185
211
H (m)
400
300
200
100
0
H (ft)
1.312
984
656
328
0
19
18
17
16
15
14
13
12
11
10
9
8
7
6
5
4
3
2
1
0
6
12
18
24
30
36
42
48
Q (m³/h)

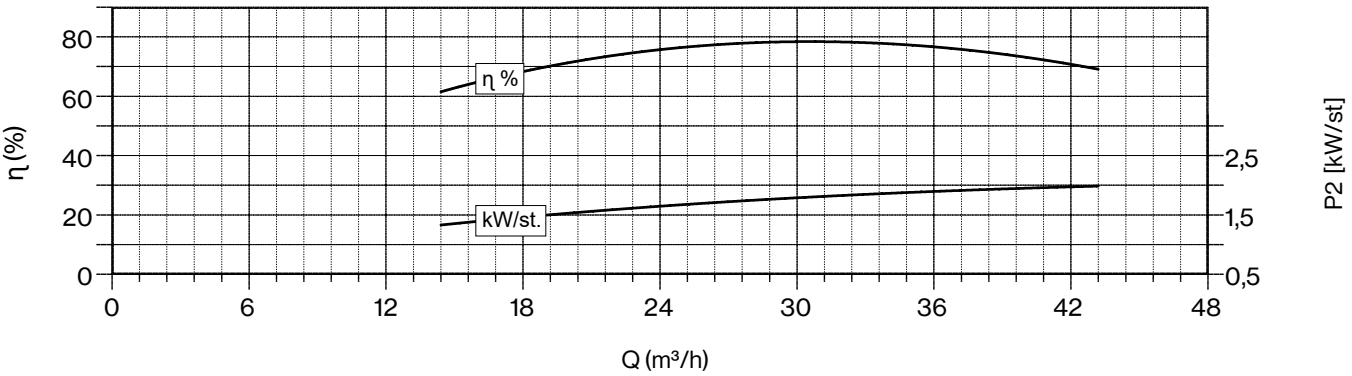
η (%)
80
60
40
20
0
η %
kW/st.
P2 [kW/st]
2,5
1,5
0,5
0
6
12
18
24
30
36
42
48
Q (m³/h)

6LRH 32

60 Hz - 3500 rpm				Q										
TYPE	P2		l/min	0	300	360	420	480	540	600	660	720	780	840
			l/sec	0,0	5,0	6,0	7,0	8,0	9,0	10,0	11,0	12,0	13,0	14,0
	HP	kW	m³/h	0	18	22	25	29	32	36	40	43	47	50
6LRH 32/01	4	3		22	22	21	20	19	18	17	16	14	13	11
6LRH 32/02	7,5	5,5		44	43	42	41	39	37	35	32	29	25	22
6LRH 32/03	10	7,5		66	65	64	61	58	55	52	48	43	38	32
6LRH 32/04	12,5	9,2		88	87	85	81	78	74	69	64	58	51	43
6LRH 32/05	17,5	13		110	109	106	102	97	92	86	80	72	63	54
6LRH 32/06	20	15		132	130	127	122	117	111	104	96	86	76	65
6LRH 32/07	25	18,5		154	152	148	142	136	129	121	112	101	89	76
6LRH 32/08	25	18,5	H (m)	176	174	169	162	156	147	138	128	115	101	86
6LRH 32/09	30	22		198	196	191	183	175	166	156	144	130	114	97
6LRH 32/10	35	26		220	217	212	203	194	184	173	160	144	127	108
6LRH 32/11	35	26		242	239	233	223	214	203	190	176	158	139	119
6LRH 32/12	40	30		264	261	254	244	233	221	207	192	173	152	130
6LRH 32/13	40	30		286	283	275	264	253	240	225	208	187	165	140
6LRH 32/14	50	37		308	304	296	284	272	258	242	224	202	177	151
6LRH 32/15	50	37		330	326	318	305	292	276	259	240	216	190	162
6LRH 32/16	50	37		353	348	339	325	311	295	276	256	230	203	173

Max Eff. % =	77,5
Max kW / St. =	2,35

NPSH (m)	Q=25%	Q=50%	Q=75%	Q=100%
	3,4	3,4	3,9	7,5

TYPE	MOTOR BRACKET	DIMENSIONS (mm)			WEIGHT (kg)	
		A	B	C	MOTOR	PUMP
6LRH 32/01-4	4" NEMA	720	302	418	12,8	11
6LRH 32/02-4		907	369	538	18,6	15
6LRH 32/03	6" NEMA	1137	436	701	55	20
6LRH 32/04		1254	503	751	60	24
6LRH 32/05		1411	570	841	70	28
6LRH 32/06		1568	637	931	75	32
6LRH 32/07		1695	704	991	83	36
6LRH 32/08		1762	771	991	83	40
6LRH 32/09		1909	838	1071	92	44
6LRH 32/10		2086	905	1181	100	49
6LRH 32/11		2153	972	1181	100	53
6LRH 32/12		2290	1039	1251	108	57
6LRH 32/13		2357	1106	1251	108	61
6LRH 32/14		2514	1173	1341	118	65
6LRH 32/15		2581	1240	1341	118	69
6LRH 32/16		2648	1307	1341	118	74

** Coupled pump shaft*

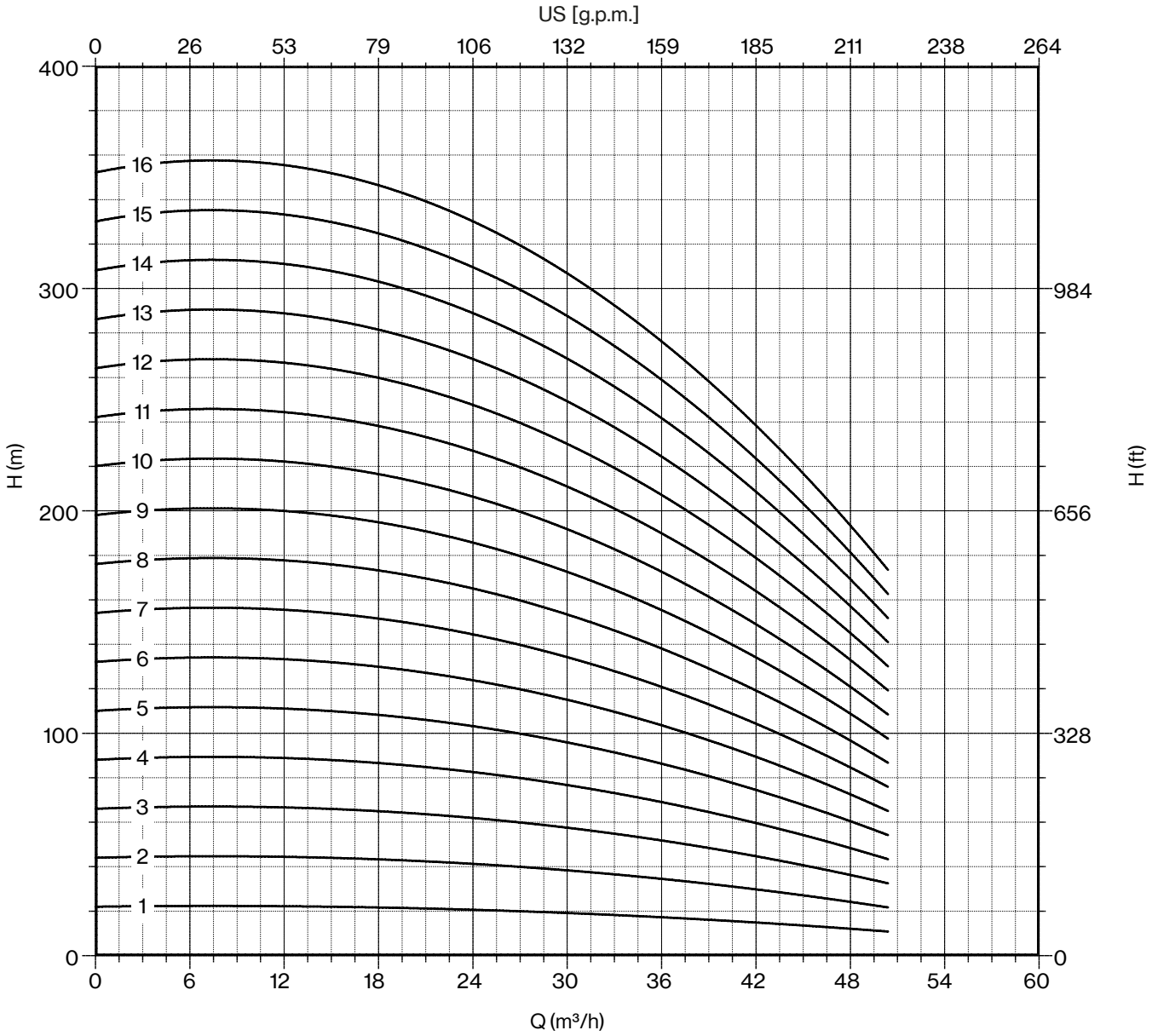
US [g.p.m.]
0
26
53
79
106
132
159
185
211
238
264
400
300
200
100
0
H (m)
984
656
328
0
H (ft)
16
15
14
13
12
11
10
9
8
7
6
5
4
3
2
1
0
6
12
18
24
30
36
42
48
54
60
Q (m³/h)

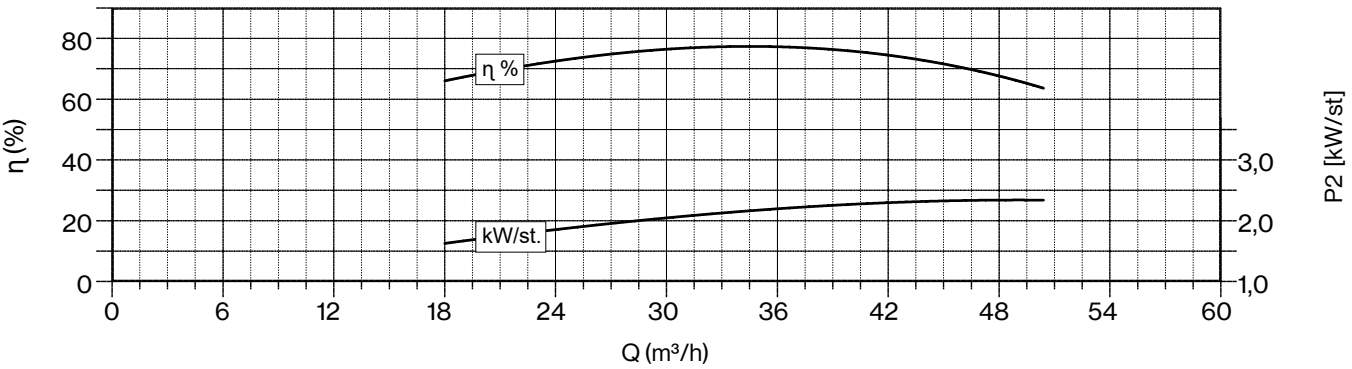
80
60
40
20
0
η (%)
η %
kW/st.
3,0
2,0
1,0
P2 [kW/st]
0
6
12
18
24
30
36
42
48
54
60
Q (m³/h)

6LM 38

60 Hz - 3500 rpm				Q						
TYPE	P2		l/min	0	360	480	600	720	840	960
			l/sec	0	6	8	10	12	14	16
	HP	kW	m³/h	0	21,6	28,8	36	43,2	50,4	57,6
6LM 38/01	4	3		21	18	17	16	15	13	10
6LM 38/02	7,5	5,5		41	37	35	33	29	25	20
6LM 38/03	10	7,5		62	55	52	49	44	38	29
6LM 38/04	12,5	9,2		82	73	69	65	59	50	39
6LM 38/05	17,5	13		103	91	86	81	73	63	49
6LM 38/06	20	15		124	110	104	98	88	75	59
6LM 38/07	25	18,5		144	128	121	114	103	88	69
6LM 38/08	25	18,5	H	165	146	138	130	118	100	78
6LM 38/09	30	22	(m)	185	165	156	146	132	113	88
6LM 38/10	35	26		206	183	173	163	147	125	98
6LM 38/11	35	26		227	201	190	179	162	138	108
6LM 38/12	40	30		247	219	207	195	176	150	118
6LM 38/13	40	30		268	238	225	212	191	163	127
6LM 38/14	50	37		288	256	242	228	206	175	137
6LM 38/15	50	37		309	274	259	244	220	188	147
6LM 38/16	50	37		329	293	276	260	235	200	157

Max Eff. % =	76
Max kW / St. =	2,3

NPSH (m)	Q=25%	Q=50%	Q=75%	Q=100%
	3,4	3,4	3,8	8

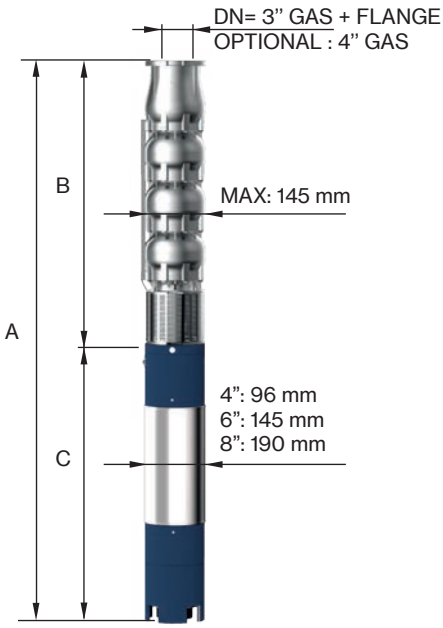

TYPE	MOTOR BRACKET	DIMENSIONS (mm)			WEIGHT (kg)	
		A	B	C	MOTOR	PUMP
6LM 38/01-4	4" NEMA	951	394	557	19	8
6LM 38/02-4		1193	495	698	27	12
6LM 38/03	6" NEMA	1297	596	701	55	15
6LM 38/04		1448	697	751	60	19
6LM 38/05		1639	798	841	70	22
6LM 38/06		1830	899	931	75	26
6LM 38/07		1991	1000	991	83	29
6LM 38/08		2092	1101	991	83	33
6LM 38/09		2273	1202	1071	92	37
6LM 38/10		2484	1303	1181	100	40
6LM 38/11		2585	1404	1181	100	44
6LM 38/12		2756	1505	1251	108	47
6LM 38/13		2857	1606	1251	108	51
6LM 38/14		3048	1707	1341	118	54
6LM 38/15		3149	1808	1341	118	58
6LM 38/16		3250	1909	1341	118	61

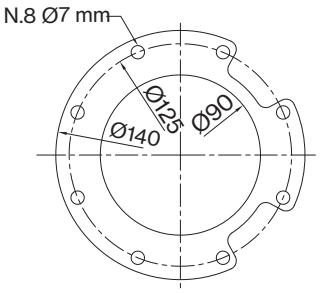

FOR COMMERCIAL TUBE
EXTERNAL DIAMETER: 88,9 mm

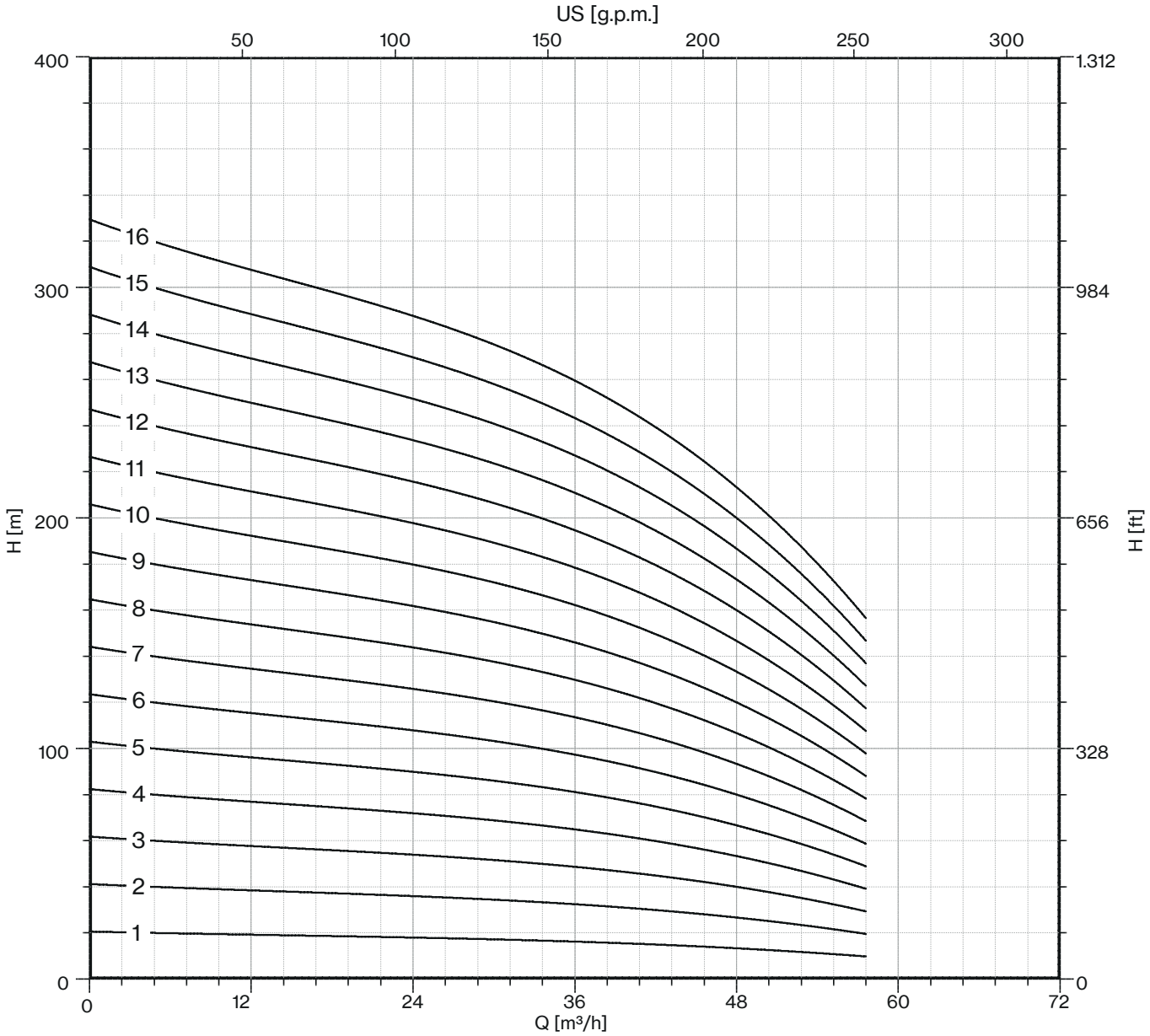
US [g.p.m.]
50
100
150
200
250
300
400
300
200
100
0
H [m]
1.312
984
656
328
0
H [ft]
16
15
14
13
12
11
10
9
8
7
6
5
4
3
2
1
0
12
24
36
48
60
72
Q [m³/h]

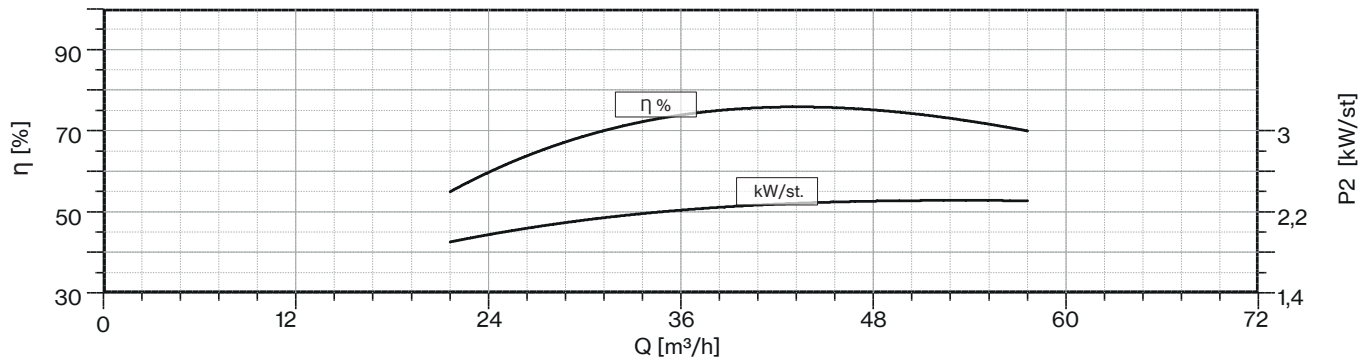
90
70
50
30
η [%]
η %
kW/st.
3
2,2
1,4
P2 [kW/st]
0
12
24
36
48
60
72
Q [m³/h]

6LM 48

60 Hz - 3500 rpm				Q							
TYPE	P2		l/min	0	480	600	720	840	960	1080	1200
			l/sec	0	8	10	12	14	16	18	20
	HP	kW	m³/h	0	28,8	36	43,2	50,4	57,6	64,8	72
6LM 48/01	4	3	H (m)	20	16	16	15	14	13	11	9
6LM 48/02	7,5	5,5		40	33	32	31	28	25	21	18
6LM 48/03	10	7,5		60	49	48	46	42	38	32	28
6LM 48/04	15	11		81	66	64	61	56	51	43	37
6LM 48/05	17,5	13		101	82	80	76	71	63	53	46
6LM 48/06	20	15		121	98	96	92	85	76	64	55
6LM 48/07	25	18,5		141	115	112	107	99	89	75	65
6LM 48/08	30	22		161	131	128	122	113	101	85	74
6LM 48/09	35	26		181	148	144	137	127	114	96	83
6LM 48/10	35	26		202	164	160	153	141	127	107	92
6LM 48/11	40	30		222	181	176	168	155	139	117	101
6LM 48/12	40	30		242	197	192	183	169	152	128	111
6LM 48/13	50	37		262	213	208	198	183	165	139	120
6LM 48/14	50	37		282	230	224	214	198	177	149	129
6LM 48/15	50	37		302	246	240	229	212	190	160	138

Max Eff. % =	78,5
Max kW / St. =	2,5

NPSH (m)	Q=25%	Q=50%	Q=75%	Q=100%
	3,45	3,5	3,8	5

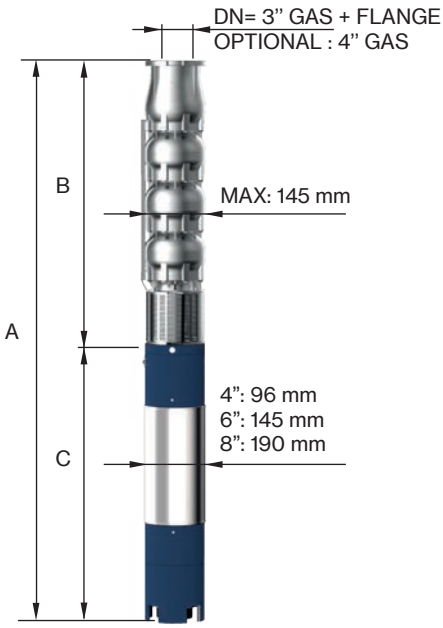

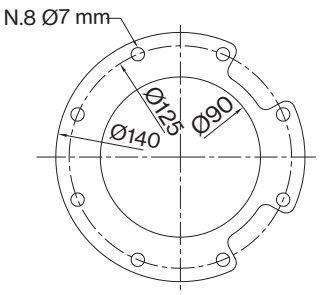

FOR COMMERCIAL TUBE
EXTERNAL DIAMETER: 88,9 mm

TYPE	MOTOR BRACKET	DIMENSIONS (mm)			WEIGHT (kg)	
		A	B	C	MOTOR	PUMP
6LM 48/01-4	4" NEMA	951	394	557	19	8
6LM 48/02-4		1193	495	698	27	12
6LM 48/03	6" NEMA	1297	596	701	55	15
6LM 48/04		1508	697	811	65	19
6LM 48/05		1639	798	841	70	22
6LM 48/06		1830	899	931	75	26
6LM 48/07		1991	1000	991	83	29
6LM 48/08		2172	1101	1071	92	33
6LM 48/09		2383	1202	1181	100	37
6LM 48/10		2484	1303	1181	100	40
6LM 48/11		2655	1404	1251	108	44
6LM 48/12		2756	1505	1251	108	47
6LM 48/13		2947	1606	1341	118	51
6LM 48/14		3048	1707	1341	118	54
6LM 48/15		3149	1808	1341	118	58

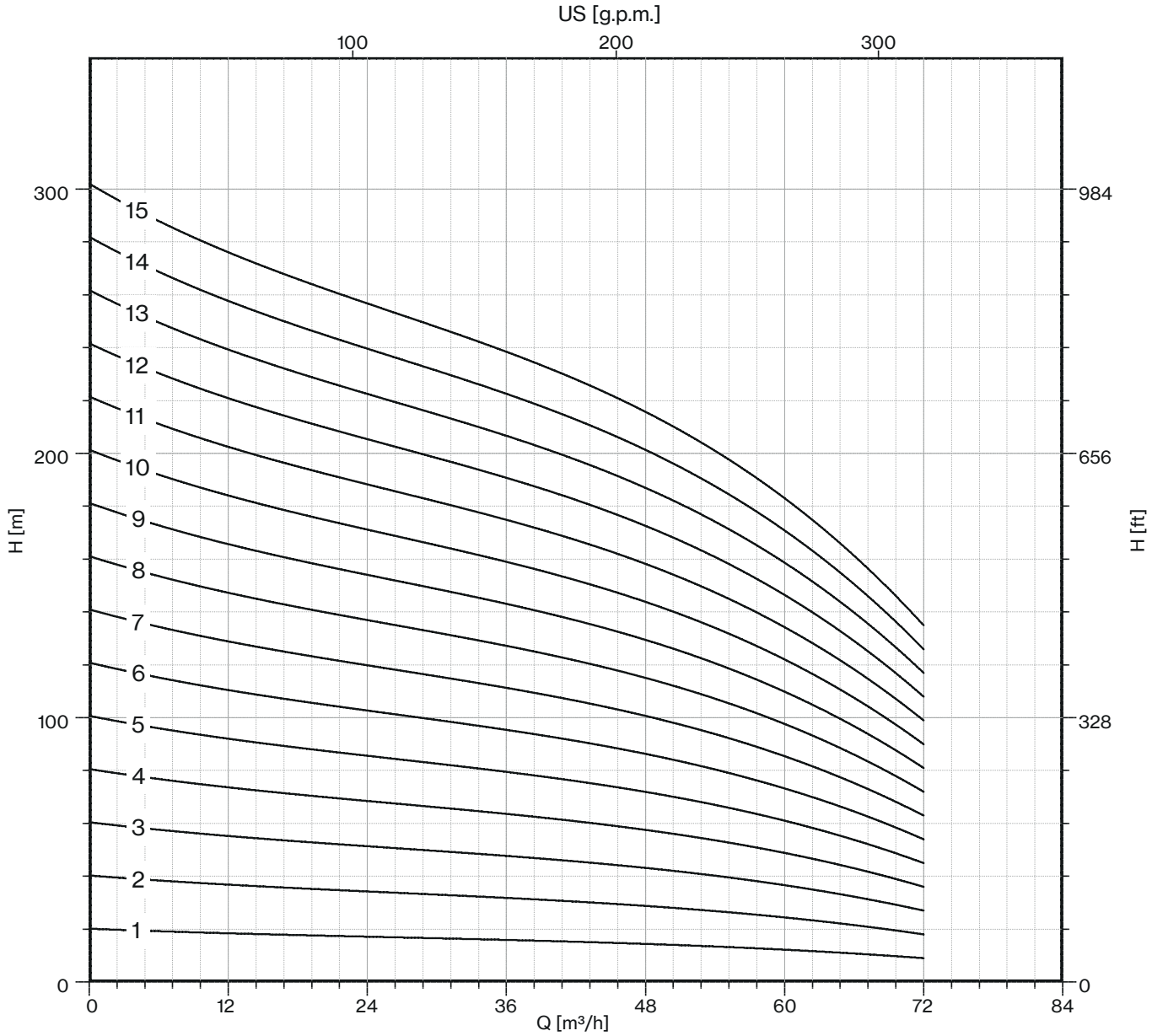
US [g.p.m.]
100
200
300
H [m]
300
200
100
0
H [ft]
984
656
328
0
15
14
13
12
11
10
9
8
7
6
5
4
3
2
1
0
12
24
36
48
60
72
84
Q [m³/h]

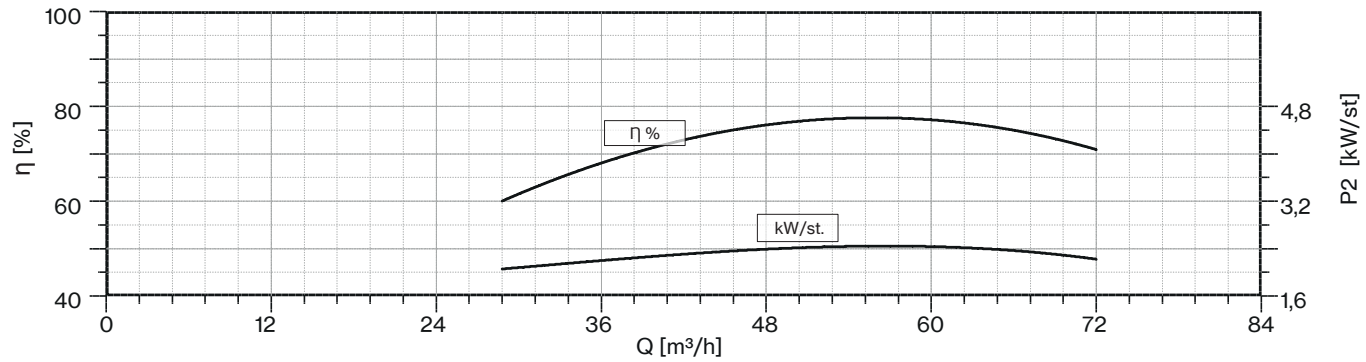
η [%]
100
80
60
40
P2 [kW/st]
4,8
3,2
1,6
η %
kW/st.
0
12
24
36
48
60
72
84
Q [m³/h]

6LM 60

60 Hz - 3500 rpm				Q							
TYPE	P2		l/min	0	720	840	960	1080	1200	1320	1440
			l/sec	0	12	14	16	18	20	22	24
	HP	kW	m³/h	0	43,2	50,4	57,6	64,8	72	79,2	86,4
6LM 60/01	4	3	H (m)	20	15	14	13	12	11	10	9
6LM 60/02	7,5	5,5		39	30	28	26	24	22	20	17
6LM 60/03	12,5	9,2		59	44	41	39	37	34	30	26
6LM 60/04	17,5	13		79	59	55	52	49	45	40	35
6LM 60/05	20	15		99	74	69	66	61	56	50	43
6LM 60/06	25	18,5		118	89	83	79	73	67	60	52
6LM 60/07	30	22		138	104	97	92	86	79	70	60
6LM 60/08	35	26		158	119	111	105	98	90	79	69
6LM 60/09	35	26		178	133	124	118	110	101	89	78
6LM 60/10	40	30		197	148	138	131	122	112	99	86
6LM 60/11	50	37		217	163	152	144	135	124	109	95
6LM 60/12	50	37		237	178	166	157	147	135	119	104
6LM 60/13	50	37		256	193	180	170	159	146	129	112
6LM 60/15	60	44		295	223	208	196	183	168	149	129

Max Eff. % =	77
Max kW / St. =	2,85

NPSH (m)	Q=25%	Q=50%	Q=75%	Q=100%
	3,8	3,8	5,1	7,1

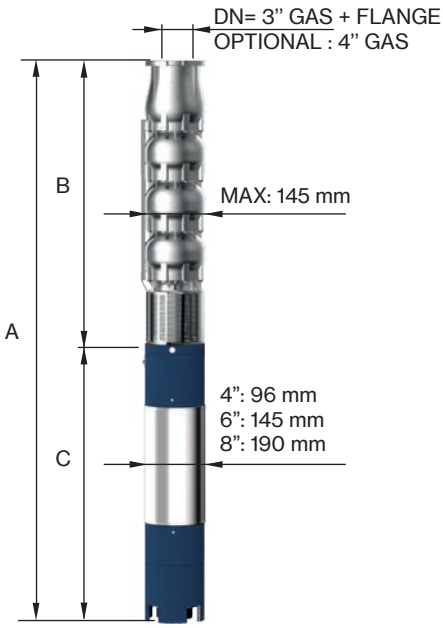

TYPE	MOTOR BRACKET	DIMENSIONS (mm)			WEIGHT (kg)	
		A	B	C	MOTOR	PUMP
6LM 60/01-4	4" NEMA	957	400	557	19	8
6LM 60/02-4		1205	507	698	27	12
6LM 60/03	6" NEMA	1365	614	751	60	16
6LM 60/04		1562	721	841	70	20
6LM 60/05		1759	828	931	75	24
6LM 60/06		1926	935	991	83	27
6LM 60/07		2113	1042	1071	92	31
6LM 60/08		2330	1149	1181	100	35
6LM 60/09		2437	1256	1181	100	39
6LM 60/10		2614	1363	1251	108	43
6LM 60/11		2811	1470	1341	118	46
6LM 60/12		2918	1577	1341	118	50
6LM 60/13		3025	1684	1341	118	54
6LM 60/15-8	8" NEMA	3021	1898	1123	178	62

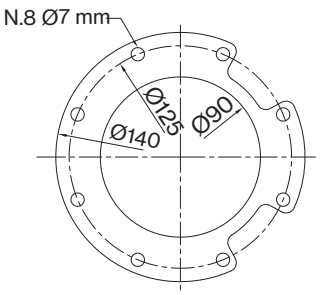

FOR COMMERCIAL TUBE
EXTERNAL DIAMETER: 88,9 mm

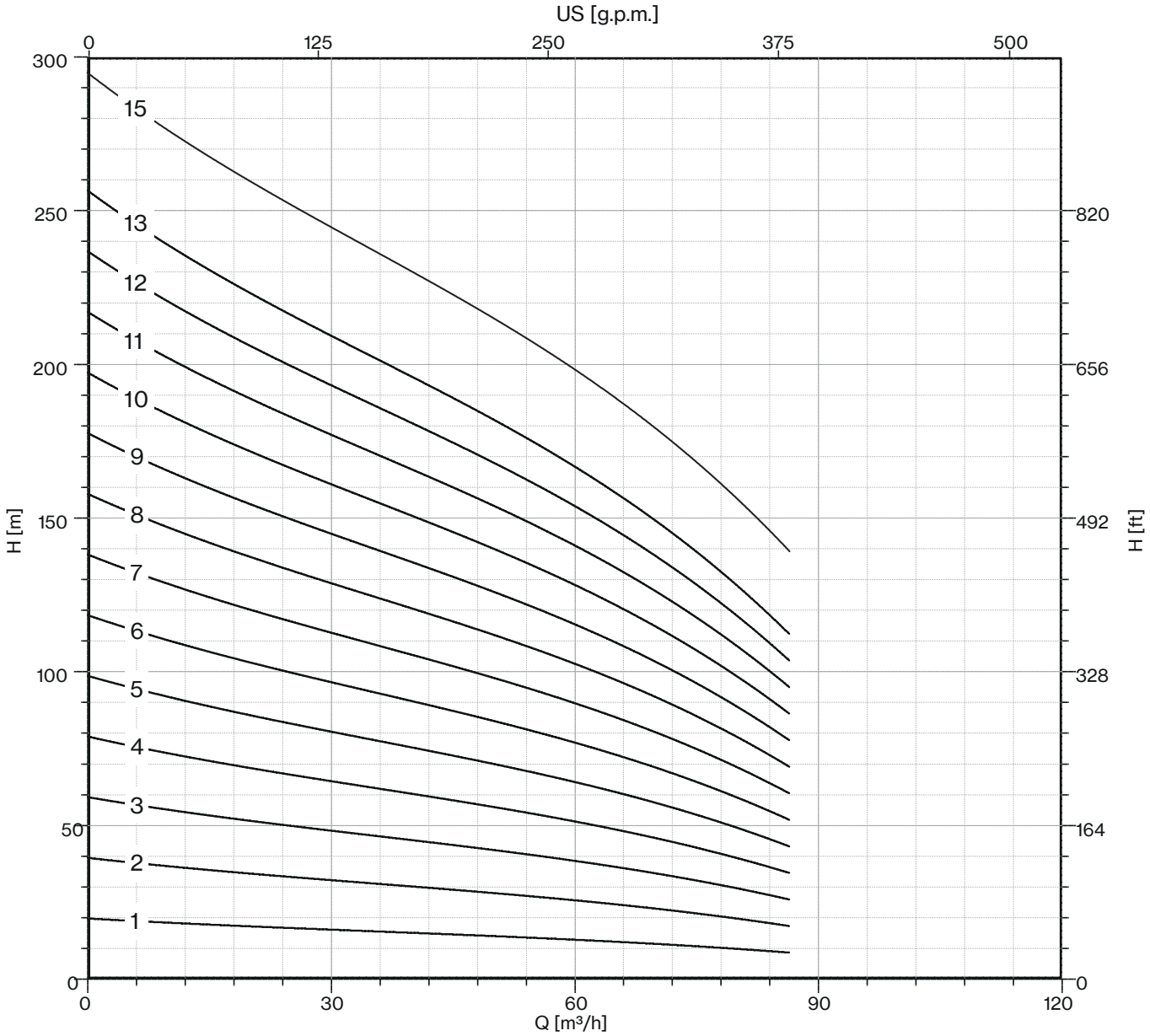
US [g.p.m.]
0
125
250
375
500
300
250
200
150
100
50
0
H [m]
820
656
492
328
164
0
H [ft]
15
13
12
11
10
9
8
7
6
5
4
3
2
1
0
30
60
90
120
Q [m³/h]

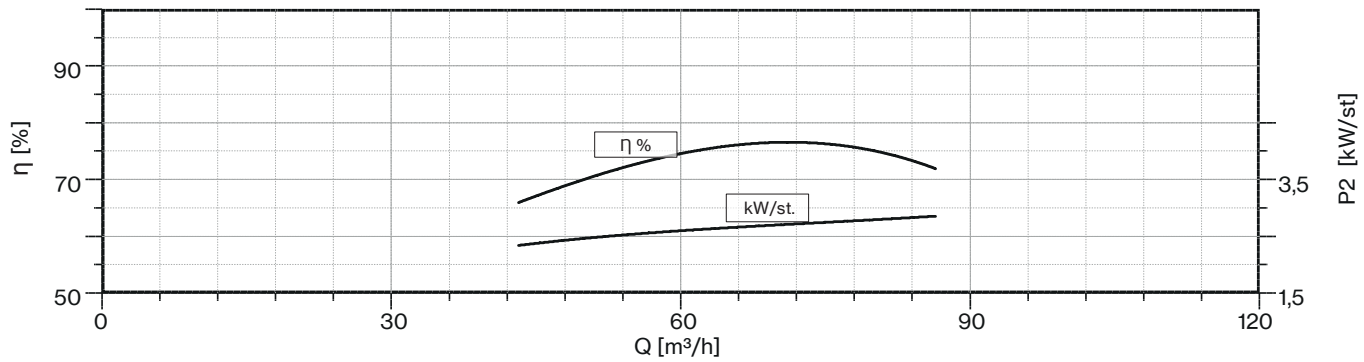
90
70
50
η [%]
3,5
1,5
P2 [kW/st]
η %
kW/st.
0
30
60
90
120
Q [m³/h]

6LM 70

60 Hz - 3500 rpm				Q									
TYPE	P2		l/min	0	840	960	1080	1200	1320	1440	1560	1680	1800
			l/sec	0	14	16	18	20	22	24	26	28	30
	HP	kW	m³/h	0	50,4	57,6	64,8	72	79,2	86,4	93,6	100,8	108
6LM 70/01	5,5	4	H (m)	18,9	15	14,3	13,7	13,5	13,1	12,2	10,9	9,5	8,1
6LM 70/02	10	7,5		37,7	30	28,5	27,4	27,1	26,2	24,5	21,9	19,0	16,1
6LM 70/03	15	11		56,6	44,9	42,8	41,0	40,6	39,3	36,7	32,8	28,5	24,2
6LM 70/04	20	15		75	60	57	55	54	52	49	44	38	32
6LM 70/05	25	18,5		94	75	71	68	68	66	61	55	48	40
6LM 70/06	30	22		113	90	86	82	81	79	73	66	57	48
6LM 70/07	35	26		132	105	100	96	95	92	86	77	67	56
6LM 70/08	40	30		151	120	114	109	108	105	98	88	76	65
6LM 70/09	50	37		170	135	128	123	122	118	110	98	86	73
6LM 70/10	50	37		189	150	143	137	135	131	122	109	95	81

Max Eff. % =	76
Max kW / St. =	3,8

NPSH (m)	Q=25%	Q=50%	Q=75%	Q=100%
	3,8	3,8	5,1	7,1

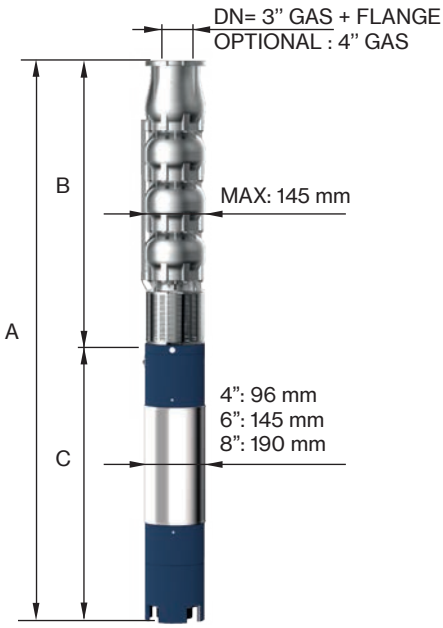

TYPE	MOTOR BRACKET	DIMENSIONS (mm)			WEIGHT (kg)	
		A	B	C	MOTOR	PUMP
6LM 70/01-4	4" NEMA	997	400	597	22	9
6LM 70/02	6" NEMA	1208	507	701	55	14
6LM 70/03		1425	614	811	65	18
6LM 70/04		1652	721	931	75	23
6LM 70/05		1819	828	991	83	27
6LM 70/06		2006	935	1071	92	32
6LM 70/07		2223	1042	1181	100	36
6LM 70/08		2400	1149	1251	108	41
6LM 70/09		2597	1256	1341	118	45
6LM 70/10		2704	1363	1341	118	50

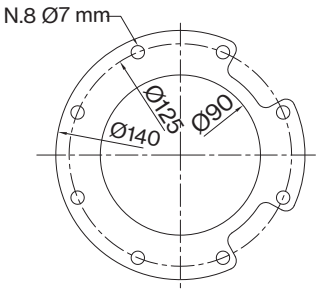

FOR COMMERCIAL TUBE
EXTERNAL DIAMETER: 88,9 mm

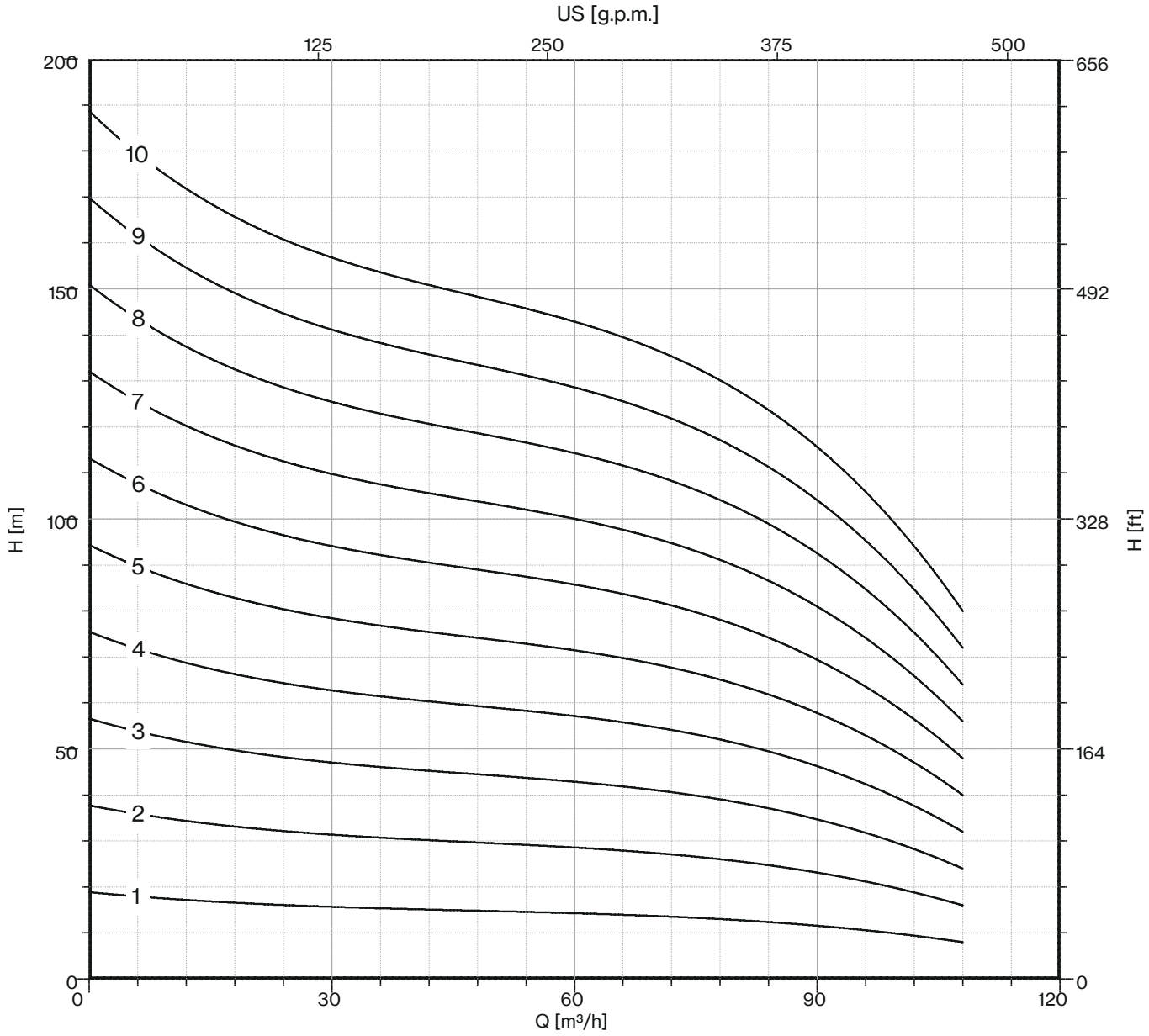
US [g.p.m.]
125
250
375
500
200
150
100
50
0
656
492
328
164
0
H [m]
H [ft]
10
9
8
7
6
5
4
3
2
1
0
30
60
90
120
Q [m³/h]

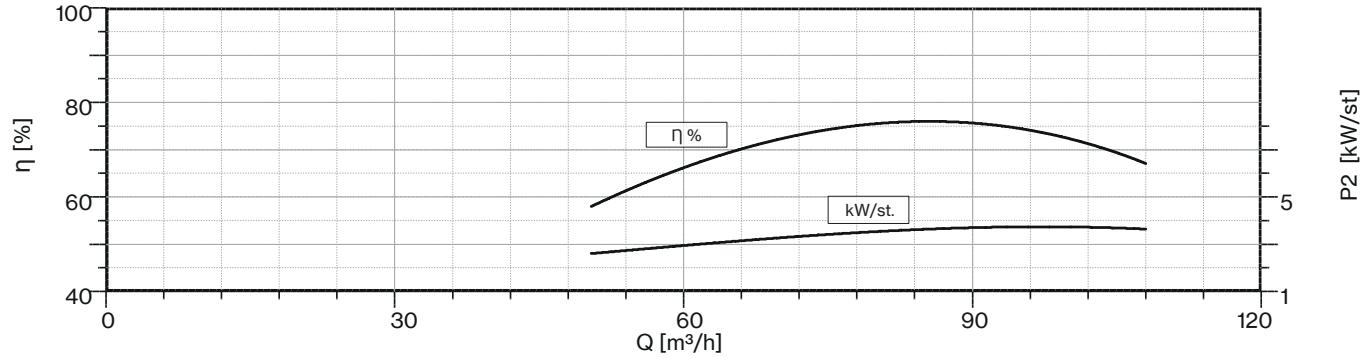
100
80
60
40
η [%]
η %
kW/st.
5
1
P2 [kW/st]
0
30
60
90
120
Q [m³/h]

8LRH & 8LM line

Submersible Well Pumps

8LRH line

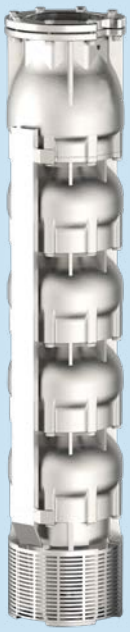

8LM line

Submersible Multistage Centrifugal Pumps for 8” Wells.
The 8LRH line is a radial type execution, while the 8LM one is a semi-axial type. These pumps feature a check valve integrated into the delivery outlet. The pump motor bracket and coupling are manufactured in compliance with NEMA standards. All components are constructed from stainless steel using lost wax microfusion technology. The standard material is AISI 304 stainless steel. Alternatively, the following materials are available upon request: AISI 316 stainless steel and Duplex steel (EN 1.4462).
The bushing bearings and wear rings are made from sand abrasion-resistant rubber, while the reverse-thrust ring is made of PTFE/Graphite.
These pumps are suitable for a wide range of applications, including civil and agricultural uses.

General operating data:

- Capacity up to 230 m³/h
- Pressure up to 735 m
- Hydraulic efficiency 8”, up to 78,5%
- Powers up to 150 kW
- Rotation speed 3.600 rpm
- Maximum depth: 350 m
- Maximum quantity of sand: 100 gr/m³
- Drinking water compatibility according to DM174 MEI >= 0,4 (EU directive No.547/2012)
- Performance tolerance: ISO9906-3B

Construction features	
Suction and delivery outlet	stainless steel AISI 304 (LRHS-LMS) stainless steel AISI 316 (LRHX-LMX) Duplex EN 1.4462 (LRHD-LMD)
Valve	stainless steel AISI 304 (LRHS-LMS) stainless steel AISI 316 (LRHX-LMX) Duplex EN 1.4462 (LRHD-LMD)
Impellers and diffusers	stainless steel AISI 304 (LRHS-LMS) stainless steel AISI 316 (LRHX-LMX) Duplex EN 1.4462 (LRHD-LMD)
Upper bushings	NBR rubber
Shaft pump side	stainless steel AISI 304 (LRHS-LMS) stainless steel AISI 316 (LRHX-LMX) Duplex EN 1.4462 (LRHD-LMD)
Quantity of sand in the water	max 100 gr/m³

Motor	
Asynchronous 2 pole	rewindable water cooled
Insulation class	Y (max 30 °C) - PPC winding type F (max 50 °C) - PE2+PA or LPE winding type
Protection degree	IP68
Liquid temperature	max 30 °C (max 50 °C on request)
Depth of immersion	max 350 m

60 Hz - 3500 rpm				Q						
TYPE	P2		l/min	0	240	360	480	600	720	840
			l/sec	0,0	4,0	6,0	8,0	10,0	12,0	14,0
	HP	kW	m³/h	0,0	14,4	21,6	28,8	36,0	43,2	50,4
8LRH 34/01	5,5	4		33	32	30	29	27	24	20
8LRH 34/02	12,5	9,2		66	63	60	57	53	48	39
8LRH 34/03	17,5	13		99	95	91	86	80	72	59
8LRH 34/04	25	18,5		132	127	121	114	107	96	78
8LRH 34/05	30	22		166	158	151	143	133	120	98
8LRH 34/06	35	26		199	190	181	171	160	143	118
8LRH 34/07	40	30		232	222	212	200	186	167	137
8LRH 34/08	50	37		265	253	242	228	213	191	157
8LRH 34/09	50	37		298	285	272	257	240	215	176
8LRH 34/10	60	44		331	317	302	285	266	239	196
8LRH 34/11	60	44	H	364	348	333	314	293	263	215
8LRH 34/12	75	55	(m)	397	380	363	342	320	287	235
8LRH 34/13	75	55		431	412	393	371	346	311	255
8LRH 34/14	90	66		464	444	423	399	373	335	274
8LRH 34/15	100	75		497	475	454	428	400	359	294
8LRH 34/16	100	75		530	507	484	456	426	382	313
8LRH 34/17	100	75		563	539	514	485	453	406	333
8LRH 34/18	100	75		596	570	544	513	480	430	353
8LRH 34/19	125	92		629	602	575	542	506	454	372
8LRH 34/20	125	92		662	634	605	570	533	478	392
8LRH 34/21	125	92		696	665	635	599	559	502	411
8LRH 34/22	125	92		729	697	665	627	586	526	431

Max Eff. % =	71
Max kW / St. =	4,14

NPSH (m)	Q=25%	Q=50%	Q=75%	Q=100%
	3,2	3,3	4,5	6,7

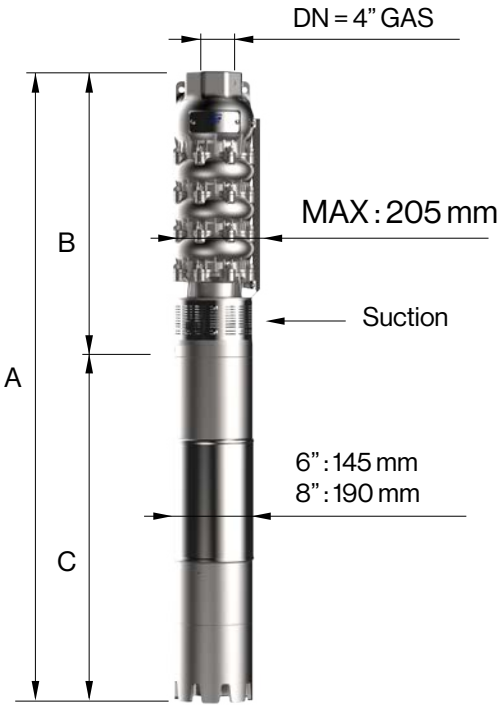

TYPE	MOTOR BRACKET	DIMENSIONS (mm)			WEIGHT (kg)	
		A	B	C	MOTOR	PUMP
8LRH 34/01-6		1106	460	646	40	21
8LRH 34/02-6		1291	540	751	60	27
8LRH 34/03-6		1461	620	841	70	33
8LRH 34/04-6		1691	700	991	83	40
8LRH 34/05-6	6" NEMA	1851	780	1071	92	46
8LRH 34/06-6		2041	860	1181	100	52
8LRH 34/07-6		2191	940	1251	108	58
8LRH 34/08-6		2361	1020	1341	118	64
8LRH 34/09-6		2441	1100	1341	118	70
8LRH 34/10		2303	1180	1123	178	77
8LRH 34/11		2383	1260	1123	178	83
8LRH 34/12		2573	1340	1233	200	89
8LRH 34/13		2653	1420	1233	200	95
8LRH 34/14		2803	1500	1303	214	101
8LRH 34/15		2963	1580	1383	230	107
8LRH 34/16	8" NEMA	3043	1660	1383	230	113
8LRH 34/17		3123	1740	1383	230	120
8LRH 34/18		3203	1820	1383	230	126
8LRH 34/19		3483	1900	1583	270	132
8LRH 34/20		3563	1980	1583	270	138
8LRH 34/21		3643	2060	1583	270	144
8LRH 34/22		3723	2140	1583	270	150

8LRH 34

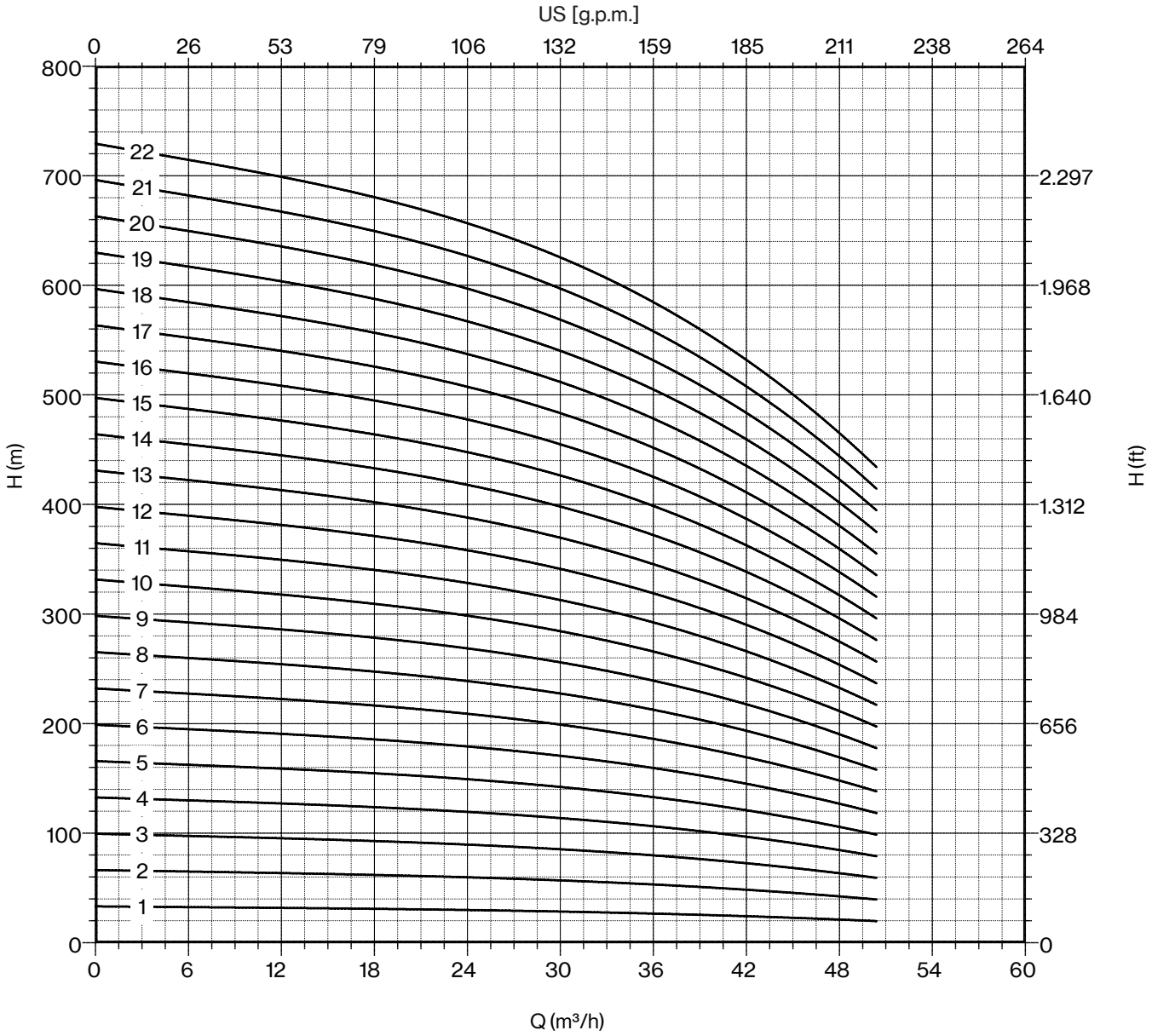

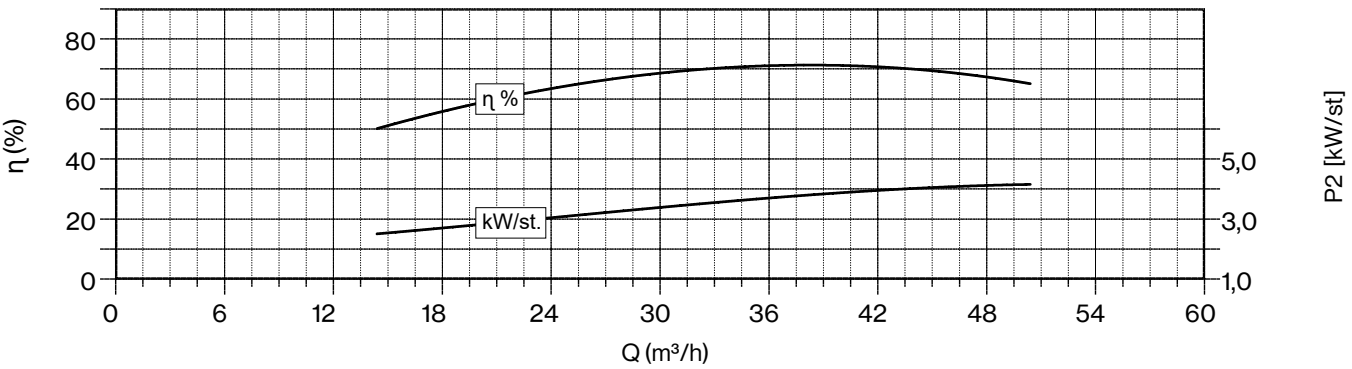

Drinking water compatibility according DM 174
MEI ≥ 0,4 (regulation EU N. 547/2012)
Models with less than 3 stages reduce the % eff. of 5%
Hydraulic performance according to ISO 9906 grade 3B

60 Hz - 3500 rpm				Q							
TYPE	P2		l/min	0	360	480	600	720	840	960	1080
			l/sec	0,0	6,0	8,0	10,0	12,0	14,0	16,0	18,0
	HP	kW	m³/h	0,0	21,6	28,8	36,0	43,2	50,4	57,6	64,8
8LRH 42/01	7,5	5,5		33	32	31	29	26	24	20	17
8LRH 42/02	15	11		67	63	62	58	53	47	40	33
8LRH 42/03	20	15		100	95	92	86	79	71	60	50
8LRH 42/04	30	22		134	127	123	115	106	94	81	67
8LRH 42/05	35	26		167	158	154	144	132	118	101	84
8LRH 42/06	40	30		200	190	185	173	159	142	121	100
8LRH 42/07	50	37		234	222	216	202	185	165	141	117
8LRH 42/08	60	44		267	253	247	230	212	189	161	134
8LRH 42/09	60	44		301	285	277	259	238	213	181	150
8LRH 42/10	75	55		334	317	308	288	265	236	202	167
8LRH 42/11	75	55	H	255	242	235	220	202	180	154	128
8LRH 42/12	90	66	(m)	401	380	370	346	318	283	242	200
8LRH 42/13	90	66		434	412	401	374	344	307	262	217
8LRH 42/14	100	75		468	444	431	403	371	331	282	234
8LRH 42/15	100	75		501	475	462	432	397	354	302	251
8LRH 42/16	125	92		535	507	493	461	424	378	323	267
8LRH 42/17	125	92		568	539	524	490	450	401	343	284
8LRH 42/18	125	92		601	570	555	518	477	425	363	301
8LRH 42/19	125	92		635	602	586	547	503	449	383	317
8LRH 42/20	150	110		668	634	616	576	530	472	403	334
8LRH 42/21	150	110		702	665	647	605	556	496	423	351
8LRH 42/22	150	110		735	697	678	634	583	520	444	367

Max Eff. % =	74
Max kW / St. =	4,9

NPSH (m)	Q=25%	Q=50%	Q=75%	Q=100%
	3,2	3,3	4,5	6,7

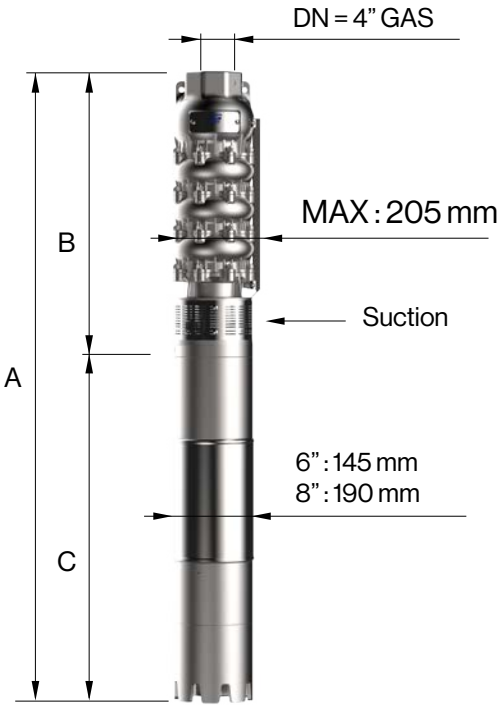

TYPE	MOTOR BRACKET	DIMENSIONS (mm)			WEIGHT (kg)	
		A	B	C	MOTOR	PUMP
8LRH 42/01-6		1131	460	671	45	21
8LRH 42/02-6		1351	540	811	65	27
8LRH 42/03-6		1551	620	931	75	33
8LRH 42/04-6	6" NEMA	1771	700	1071	92	40
8LRH 42/05-6		1961	780	1181	100	46
8LRH 42/06-6		2111	860	1251	108	52
8LRH 42/07-6		2281	940	1341	118	58
8LRH 42/08		2143	1020	1123	178	64
8LRH 42/09		2223	1100	1123	178	70
8LRH 42/10		2413	1180	1233	200	77
8LRH 42/11		2493	1260	1233	200	83
8LRH 42/12		2643	1340	1303	214	89
8LRH 42/13		2723	1420	1303	214	95
8LRH 42/14		2883	1500	1383	230	101
8LRH 42/15	8" NEMA	2963	1580	1383	230	107
8LRH 42/16		3243	1660	1583	270	113
8LRH 42/17		3323	1740	1583	270	120
8LRH 42/18		3403	1820	1583	270	126
8LRH 42/19		3483	1900	1583	270	132
8LRH 42/20		3713	1980	1733	300	138
8LRH 42/21		3793	2060	1733	300	144
8LRH 42/22		3873	2140	1733	300	150

8LRH 42

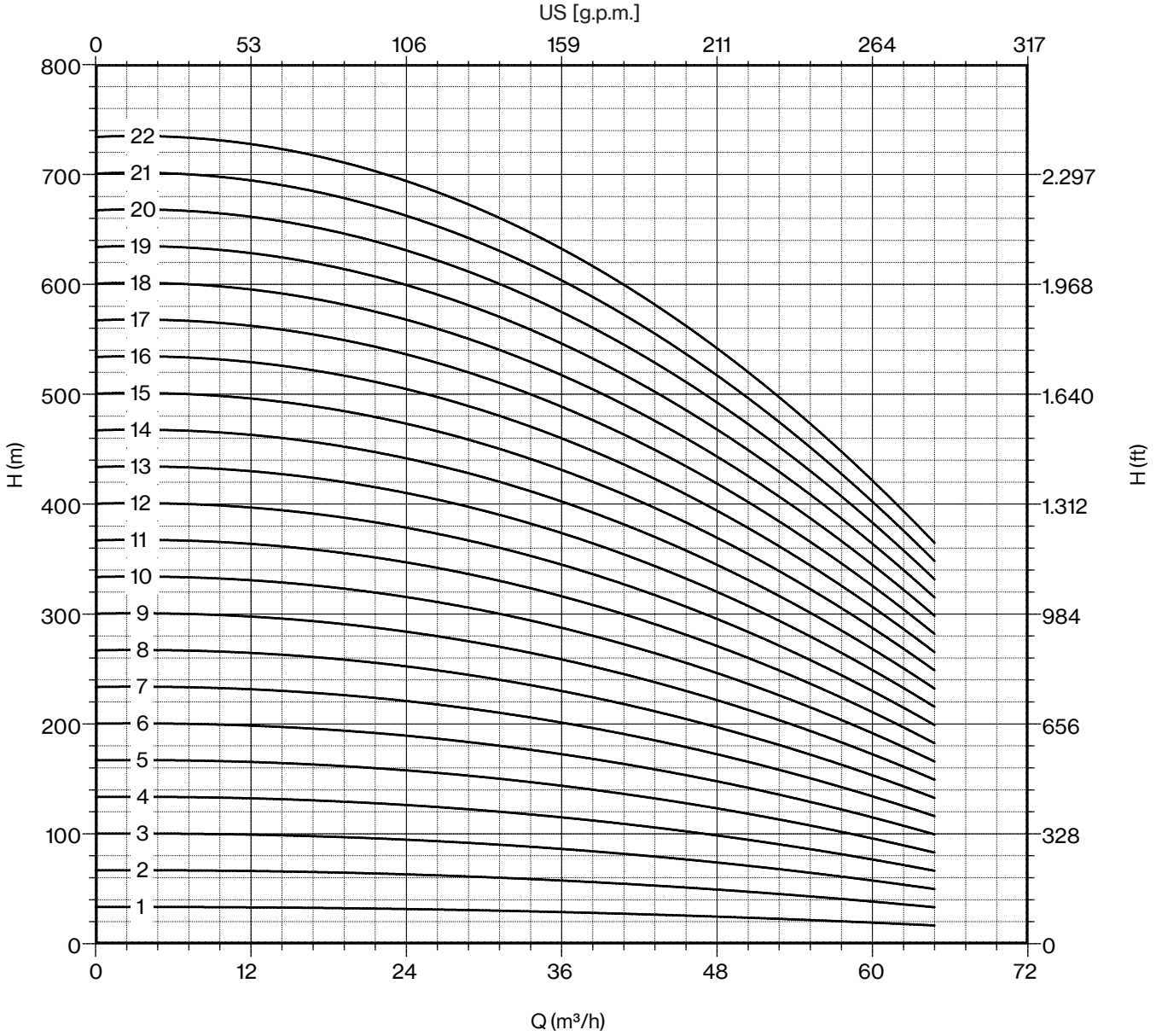

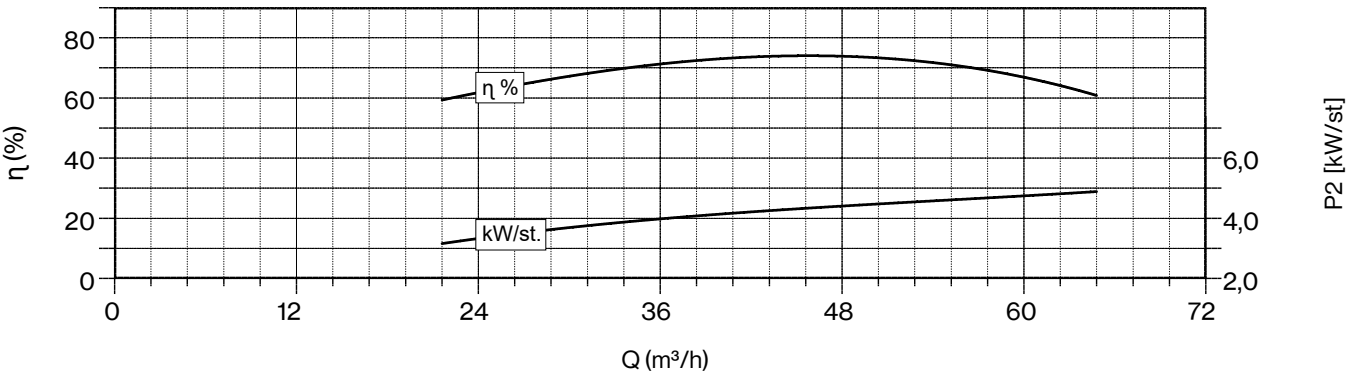

Drinking water compatibility according DM 174
MEI ≥ 0,4 (regulation EU N. 547/2012)
Models with less than 3 stages reduce the % eff. of 5%
Hydraulic performance according to ISO 9906 grade 3B

60 Hz - 3500 rpm				Q							
TYPE	P2		l/min	0	600	720	840	960	1080	1200	1320
			l/sec	0,0	10,0	12,0	14,0	16,0	18,0	20,0	22,0
	HP	kW	m³/h	0,0	36,0	43,2	50,4	57,6	64,8	72,0	79,2
8LRH 52/01	10	7,5	H (m)	35	31	30	28	26	24	21	18
8LRH 52/02	17,5	13		69	62	59	56	52	48	43	36
8LRH 52/03	25	18,5		104	92	89	84	79	72	64	54
8LRH 52/04	35	26		138	123	119	112	105	96	85	73
8LRH 52/05	40	30		173	154	148	140	131	120	107	91
8LRH 52/06	50	37		207	185	178	168	157	143	128	109
8LRH 52/07	60	44		242	216	208	196	183	167	149	127
8LRH 52/08	75	55		276	247	237	223	210	191	170	145
8LRH 52/09	75	55		311	277	267	251	236	215	192	163
8LRH 52/10	90	66		346	308	297	279	262	239	213	181
8LRH 52/11	90	66		380	339	326	307	288	263	234	200
8LRH 52/12	100	75		415	370	356	335	314	287	256	218
8LRH 52/13	125	92		449	401	386	363	341	311	277	236
8LRH 52/14	125	92		484	431	415	391	367	335	298	254
8LRH 52/15	125	92		518	462	445	419	393	359	320	272
8LRH 52/16	150	110		553	493	475	447	419	382	341	290
8LRH 52/17	150	110		588	524	504	475	446	406	362	308
8LRH 52/18	150	110		622	555	534	503	472	430	384	327

Max Eff. % =	73
Max kW / St. =	6

NPSH (m)	Q=25%	Q=50%	Q=75%	Q=100%
	3,5	3,5	6	8

TYPE	MOTOR BRACKET	DIMENSIONS (mm)			WEIGHT (kg)	
		A	B	C	MOTOR	PUMP
8LRH 52/01-6	6" NEMA	1169	468	701	55	22
8LRH 52/02-6		1397	556	841	70	29
8LRH 52/03-6		1635	644	991	83	36
8LRH 52/04-6		1913	732	1181	100	44
8LRH 52/05-6		2071	820	1251	108	51
8LRH 52/06-6		2249	908	1341	118	58
8LRH 52/07	8" NEMA	2119	996	1123	178	65
8LRH 52/08		2317	1084	1233	200	72
8LRH 52/09		2405	1172	1233	200	79
8LRH 52/10		2563	1260	1303	214	87
8LRH 52/11		2651	1348	1303	214	94
8LRH 52/12		2819	1436	1383	230	101
8LRH 52/13		3107	1524	1583	270	108
8LRH 52/14		3195	1612	1583	270	115
8LRH 52/15		3283	1700	1583	270	122
8LRH 52/16		3521	1788	1733	300	129
8LRH 52/17		3609	1876	1733	300	137
8LRH 52/18		3697	1964	1733	300	144

** Coupled pump shaft*

8LRH 52

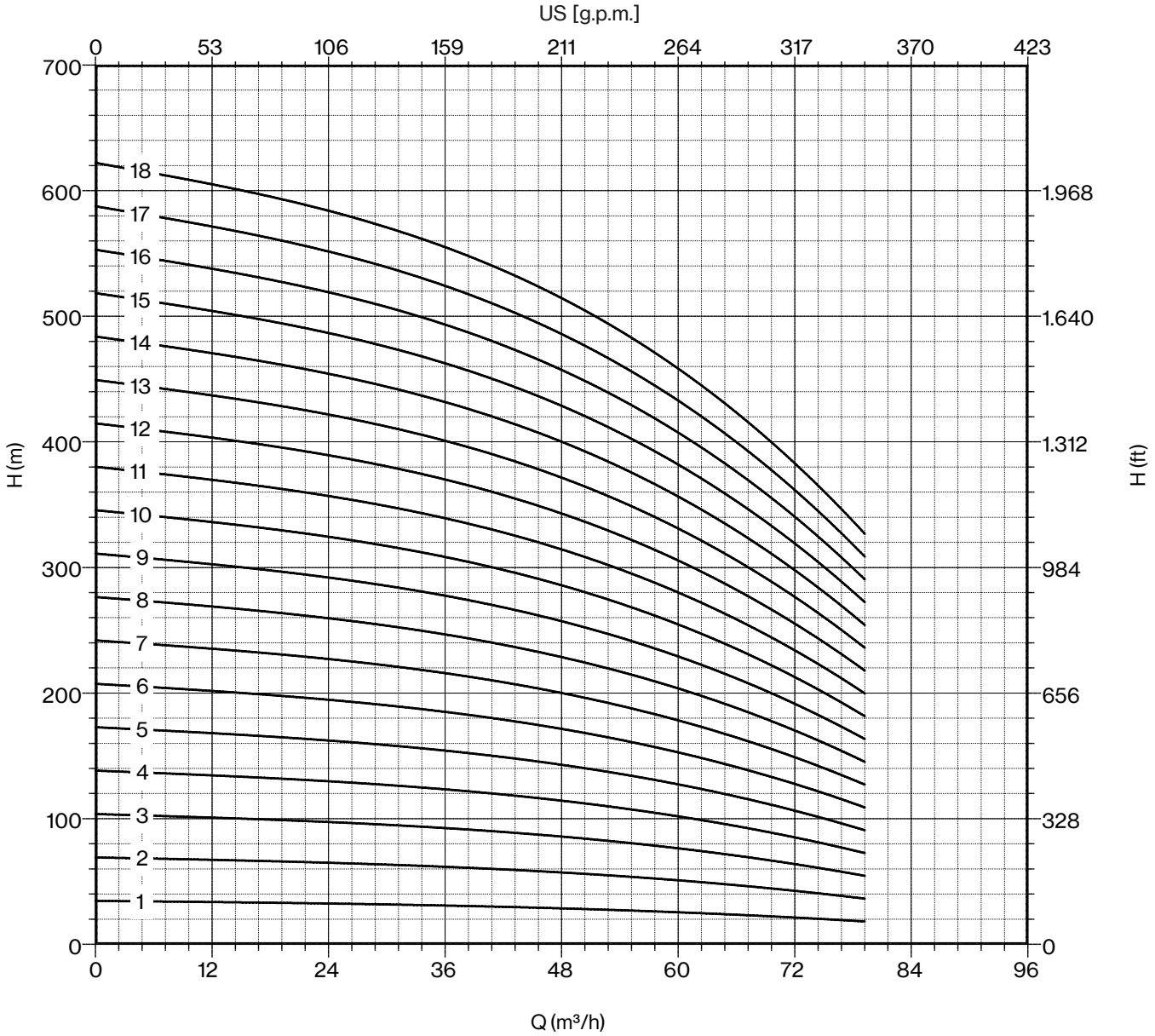

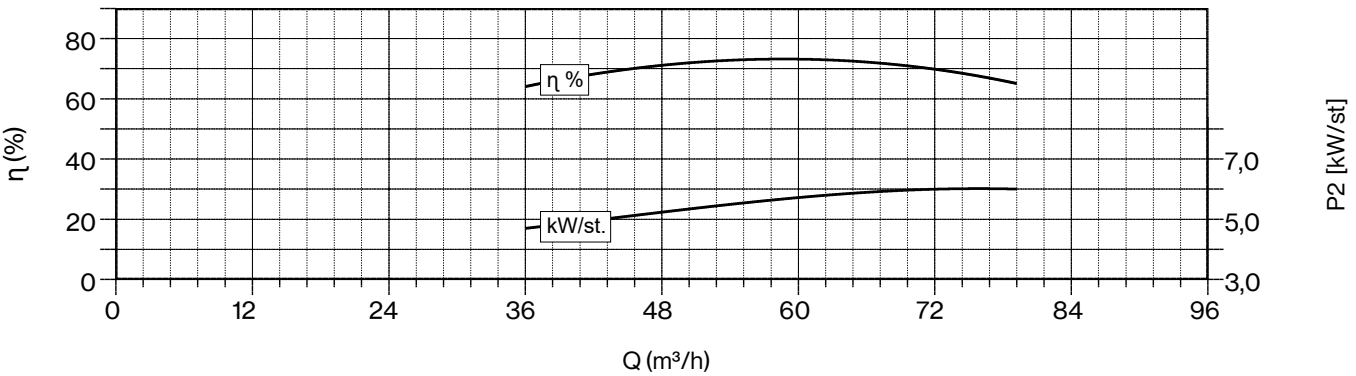

Drinking water compatibility according DM 174
MEI ≥ 0,4 (regulation EU N. 547/2012)
Models with less than 3 stages reduce the % eff. of 5%
Hydraulic performance according to ISO 9906 grade 3B

60 Hz - 3500 rpm				Q							
TYPE	P2		l/min	0	720	960	1080	1200	1320	1440	1560
			l/sec	0,0	12,0	16,0	18,0	20,0	22,0	24,0	26,0
	HP	kW	m³/h	0	43	58	65	72	79	86	94
8LRH 62/01	10	7,5	H (m)	33	30	27	26	24	22	20	17
8LRH 62/02	17,5	13		65	60	55	52	48	44	39	33
8LRH 62/03	30	22		98	91	82	78	73	66	59	50
8LRH 62/04	35	26		130	121	109	104	97	88	78	67
8LRH 62/05	50	37		163	151	137	130	121	109	98	84
8LRH 62/06	60	44		195	181	164	156	145	131	118	100
8LRH 62/07	60	44		228	212	192	181	169	153	137	117
8LRH 62/08	75	55		260	242	219	207	194	175	157	134
8LRH 62/09	90	66		293	272	246	233	218	197	176	150
8LRH 62/10	90	66		325	302	274	259	242	219	196	167
8LRH 62/11	100	75		358	333	301	285	266	241	215	184
8LRH 62/12	125	92		391	363	328	311	290	263	235	200
8LRH 62/13	125	92		423	393	356	337	314	285	255	217
8LRH 62/14	125	92		456	423	383	363	339	306	274	234
8LRH 62/15	150	110		488	454	410	389	363	328	294	251
8LRH 62/16	150	110		521	484	438	415	387	350	313	267
8LRH 62/17	150	110		553	514	465	441	411	372	333	284

Max Eff. % =	75
Max kW / St. =	6,5

NPSH (m)	Q=25%	Q=50%	Q=75%	Q=100%
	3,5	3,5	6	8

TYPE	MOTOR BRACKET	DIMENSIONS (mm)			WEIGHT (kg)	
		A	B	C	MOTOR	PUMP
8LRH 62/01-6	6" NEMA	1169	468	701	55	22
8LRH 62/02-6		1397	556	841	70	29
8LRH 62/03-6		1715	644	1071	92	36
8LRH 62/04-6		1913	732	1181	100	44
8LRH 62/05-6		2161	820	1341	118	51
8LRH 62/06	8" NEMA	2031	908	1123	178	58
8LRH 62/07		2119	996	1123	178	65
8LRH 62/08		2317	1084	1233	200	72
8LRH 62/09		2475	1172	1303	214	79
8LRH 62/10		2563	1260	1303	214	87
8LRH 62/11		2731	1348	1383	230	94
8LRH 62/12		3019	1436	1583	270	101
8LRH 62/13		3107	1524	1583	270	108
8LRH 62/14		3195	1612	1583	270	115
8LRH 62/15		3433	1700	1733	300	122
8LRH 62/16		3521	1788	1733	300	129
8LRH 62/17		3609	1876	1733	300	137

8LRH 62

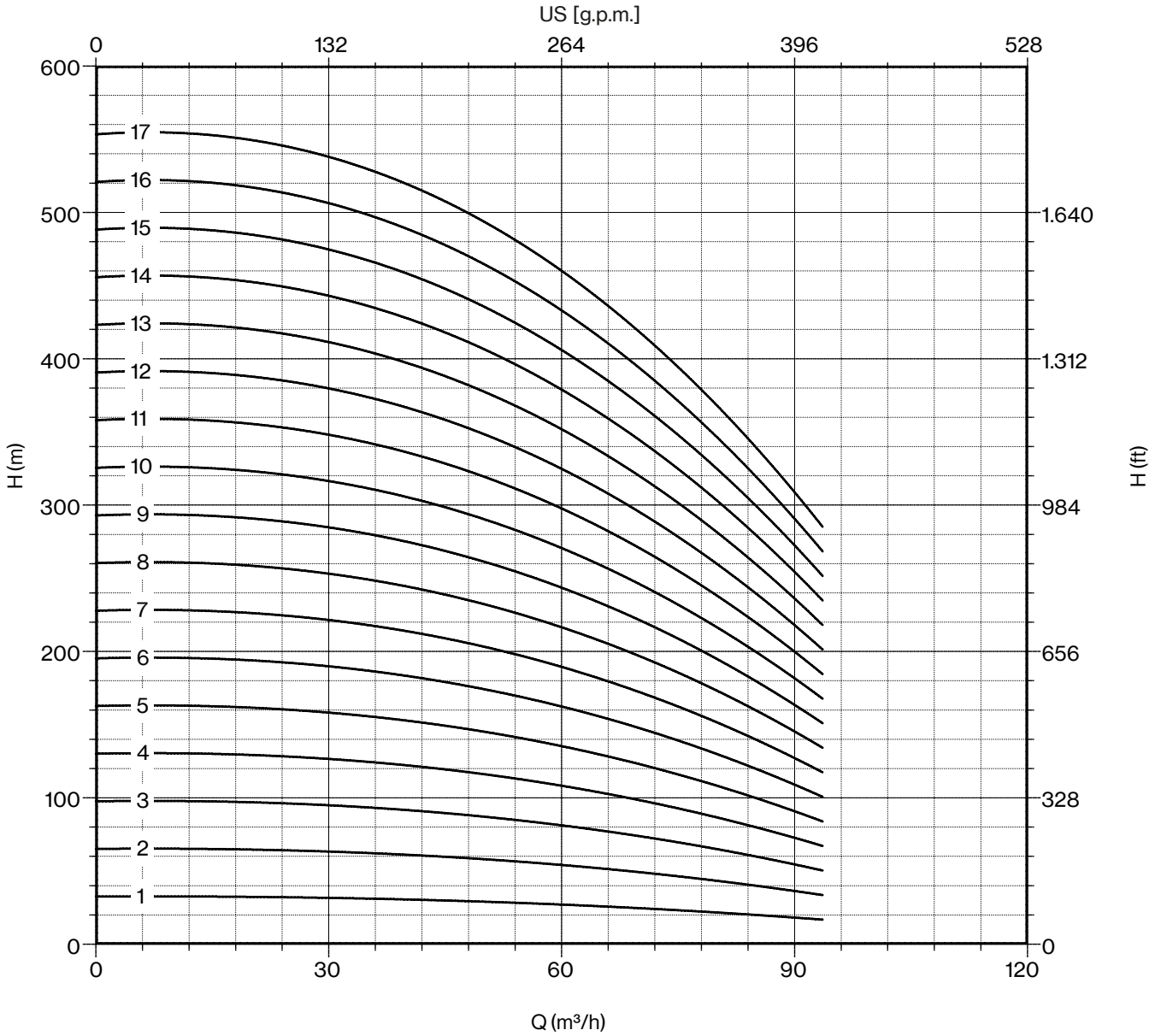

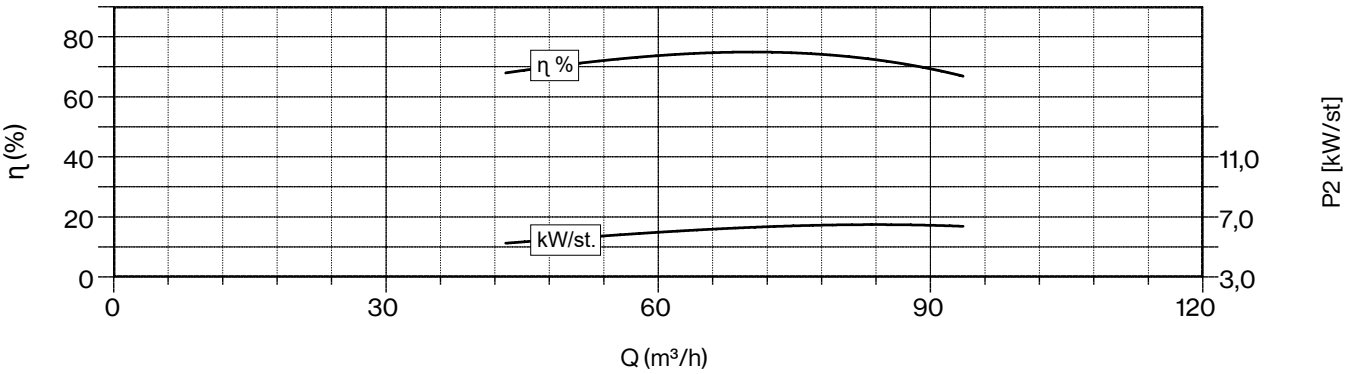

Drinking water compatibility according DM 174
MEI ≥ 0,4 (regulation EU N. 547/2012)
Models with less than 3 stages reduce the % eff. of 5%
Hydraulic performance according to ISO 9906 grade 3B

60 Hz - 3500 rpm				Q						
TYPE	P2		l/min	0	720	960	1200	1440	1680	1920
			l/sec	0	12	16	20	24	28	32
	HP	kW	m³/h	0	43,2	57,6	72	86,4	100,8	115,2
8LM 80/01	15	11	H (m)	39	35	34	31	29	25	21
8LM 80/02	30	22		78	70	67	63	58	50	43
8LM 80/03	40	30		117	105	101	94	86	76	64
8LM 80/04	60	45		156	140	134	126	115	101	85
8LM 80/05	75	55		194	175	168	157	144	126	107
8LM 80/06	90	66		233	210	201	188	173	151	128
8LM 80/07	100	75		272	245	235	220	202	176	149
8LM 80/08	125	92		311	280	268	251	230	202	170
8LM 80/09	125	92		350	315	302	283	259	227	192
8LM 80/10 D	150	110		389	350	336	314	288	252	213
8LM 80/11 D	150	110		428	385	369	345	317	277	234
8LM 80/12 D	175	130		467	420	403	377	346	302	256
8LM 80/13 D	175	130		505	455	436	408	374	328	277

Max Eff. % =	74
Max kW / St. =	9,95

NPSH (m)	Q=25%	Q=50%	Q=75%	Q=100%
	3	3	3,5	4,5

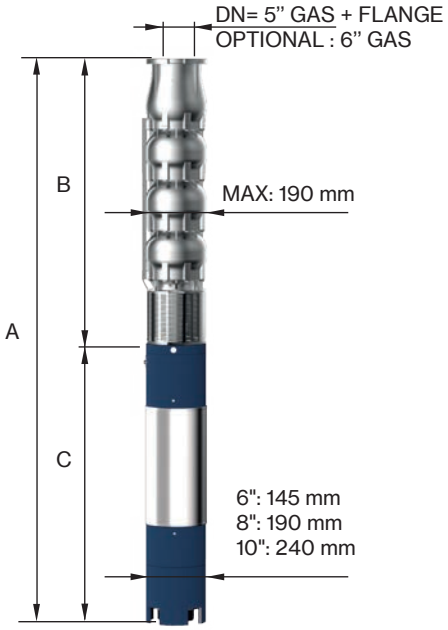

TYPE	MOTOR BRACKET	DIMENSIONS (mm)			WEIGHT (kg)	
		A	B	C	MOTOR	PUMP
8LM 80/01-6	6" NEMA	1336	525	811	65	19
8LM 80/02-6		1721	650	1071	92	26
8LM 80/03-6		2026	775	1251	108	32
8LM 80/04	8" NEMA	2023	900	1123	178	39
8LM 80/05		2258	1025	1233	200	45
8LM 80/06		2453	1150	1303	214	52
8LM 80/07		2658	1275	1383	230	58
8LM 80/08		2983	1400	1583	270	65
8LM 80/09		3108	1525	1583	270	71
8LM 80/10 D		3383	1650	1733	300	78
8LM 80/11 D		3508	1775	1733	300	84
8LM 80/12 D-10	10"	3534	1900	1634	385	91
8LM 80/13 D-10		3659	2025	1634	385	97

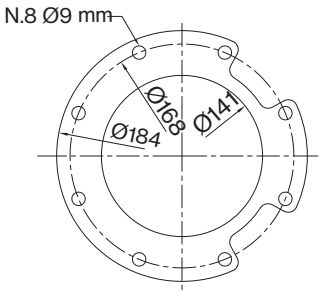

FOR COMMERCIAL TUBE
EXTERNAL DIAMETER: 139,7 mm

8LM 80

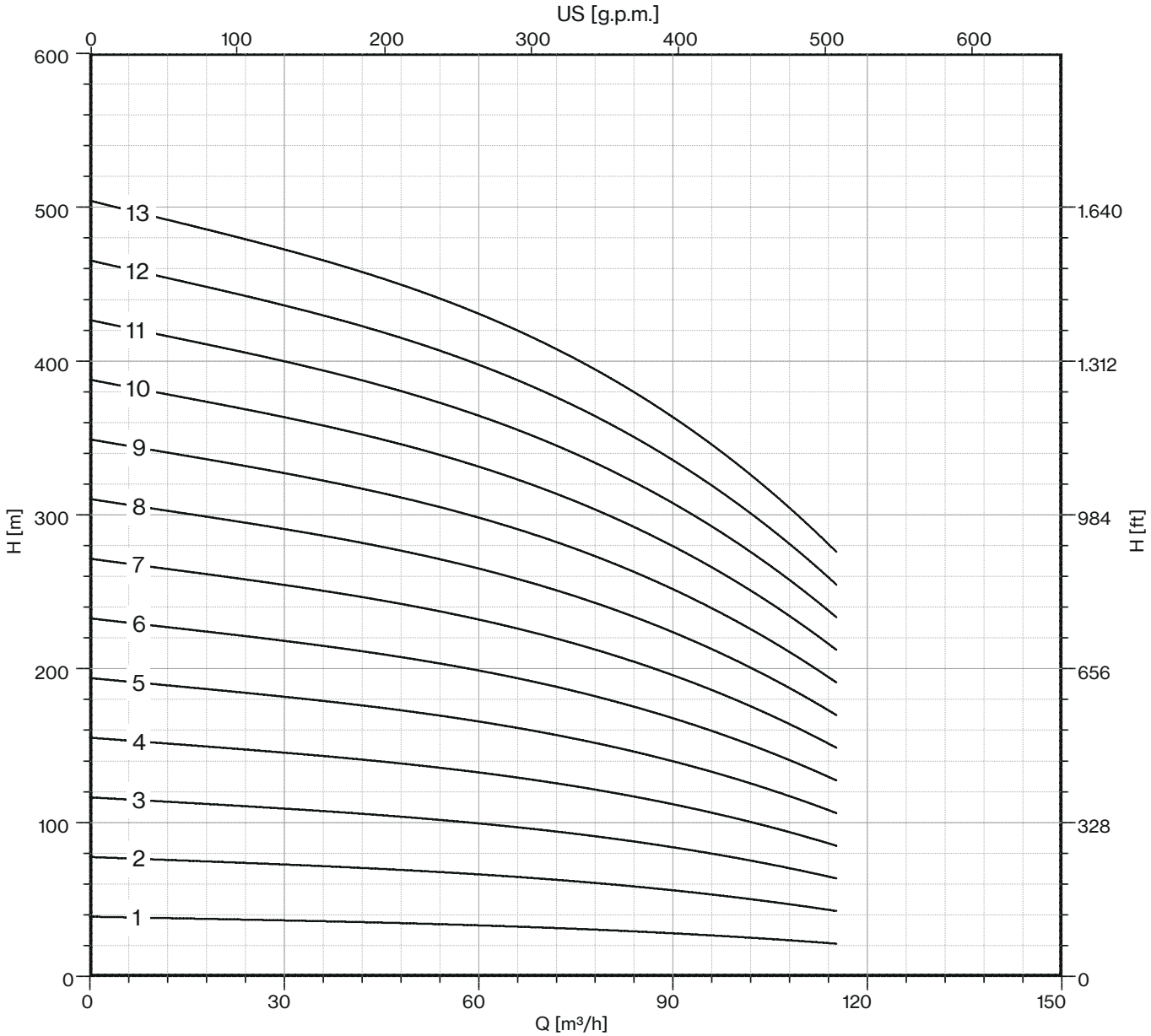

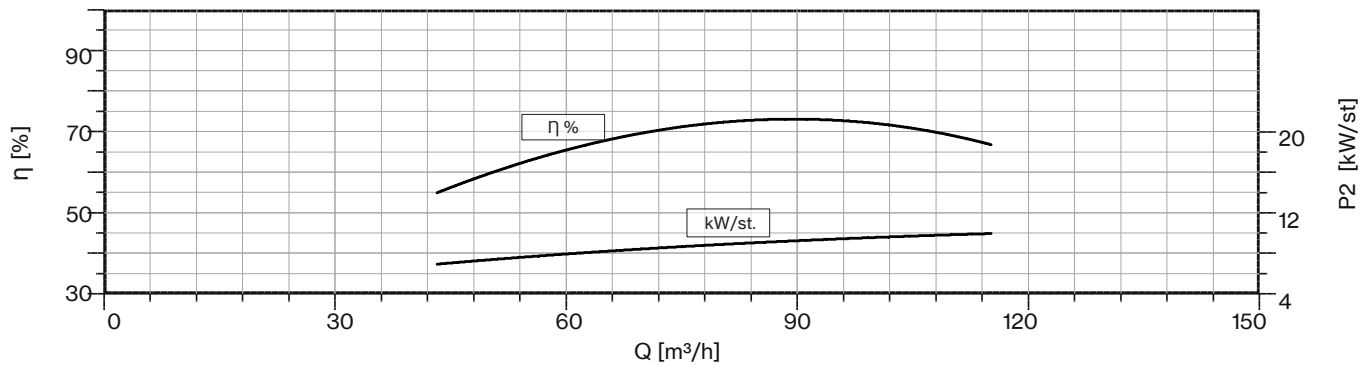

Drinking water compatibility according DM 174
MEI ≥ 0,4 (regulation EU N. 547/2012)
Models with less than 3 stages reduce the % eff. of 5%
Hydraulic performance according to ISO 9906 grade 3B

60 Hz - 3500 rpm				Q							
TYPE	P2		l/min	0	960	1200	1440	1680	1920	2160	2400
			l/sec	0	16	20	24	28	32	36	40
	HP	kW	m³/h	0	57,6	72	86,4	100,8	115,2	129,6	144
8LM 92/01	15	11	H (m)	39	35	34	31	29	26	22	18
8LM 92/02	30	22		78	70	67	63	58	52	45	36
8LM 92/03	50	37		117	105	101	94	87	77	67	54
8LM 92/04	60	45		156	140	134	126	116	103	89	73
8LM 92/05	75	55		194	175	168	157	145	129	112	91
8LM 92/06	90	66		233	210	201	188	174	155	134	109
8LM 92/07	125	92		272	245	235	220	203	180	156	127
8LM 92/08	125	92		311	280	268	251	232	206	179	145
8LM 92/09D	150	110		350	315	302	283	260	232	201	163
8LM 92/10D	150	110		389	350	336	314	289	258	223	181
8LM 92/11D	175	130		428	385	369	345	318	284	246	200
8LM 92/12D	200	150		467	420	403	377	347	309	268	218
8LM 92/13D	200	150		505	455	436	408	376	335	290	236

Max Eff. % =	75
Max kW / St. =	11,2

NPSH (m)	Q=25%	Q=50%	Q=75%	Q=100%
	2,5	2,9	3,9	7,8

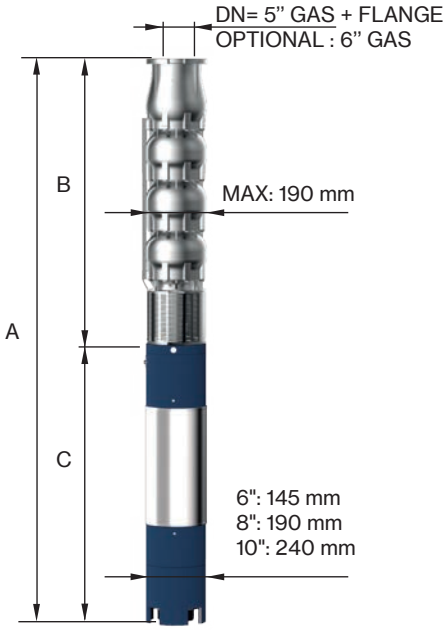

TYPE	MOTOR BRACKET	DIMENSIONS (mm)			WEIGHT (kg)	
		A	B	C	MOTOR	PUMP
8LM 92/01-6	6" NEMA	1336	525	811	65	19
8LM 92/02-6		1721	650	1071	92	26
8LM 92/03-6		2116	775	1341	118	32
8LM 92/04	8" NEMA	2023	900	1123	178	39
8LM 92/05		2258	1025	1233	200	45
8LM 92/06		2453	1150	1303	214	52
8LM 92/07		2858	1275	1583	270	58
8LM 92/08		2983	1400	1583	270	65
8LM 92/09D		3258	1525	1733	300	71
8LM 92/10D		3383	1650	1733	300	78
8LM 92/11D-10	10"	3409	1775	1634	385	84
8LM 92/12D-10		3634	1900	1734	415	91
8LM 92/13D-10		3759	2025	1734	415	97

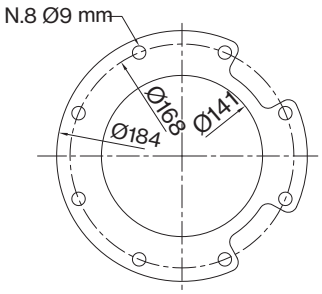

FOR COMMERCIAL TUBE
EXTERNAL DIAMETER: 139,7 mm

8LM 92

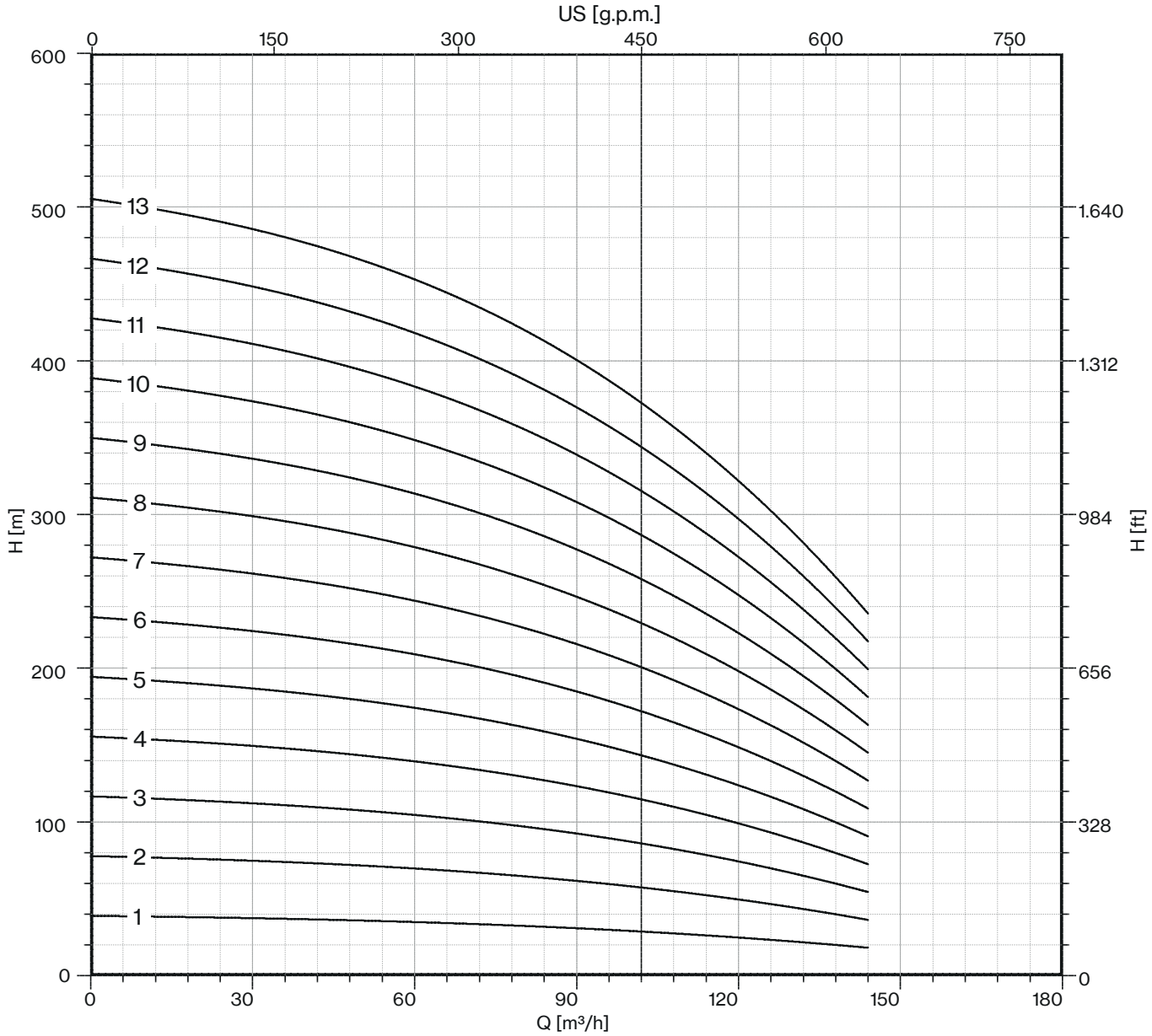

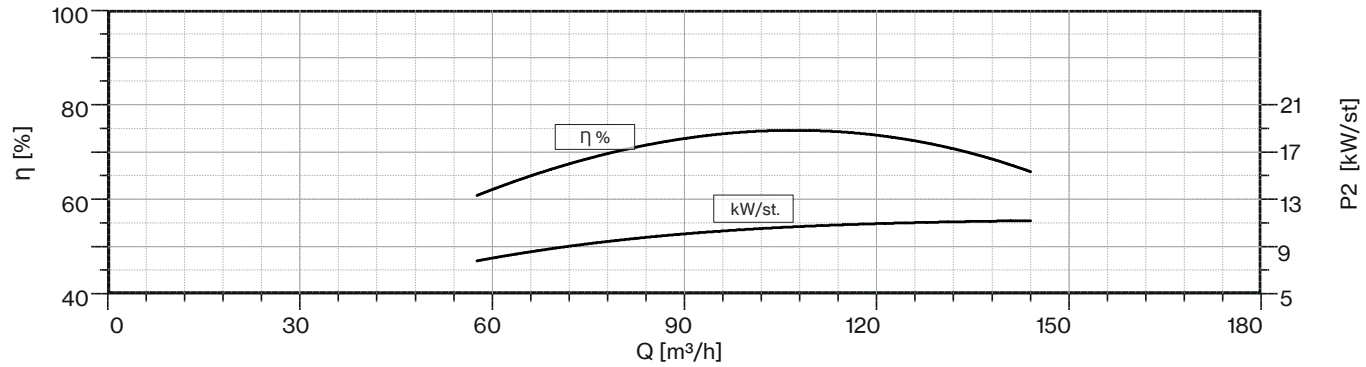

Drinking water compatibility according DM 174
MEI ≥ 0,4 (regulation EU N. 547/2012)
Models with less than 3 stages reduce the % eff. of 5%
Hydraulic performance according to ISO 9906 grade 3B

60 Hz - 3500 rpm				Q								
TYPE	P2		l/min	0	1200	1440	1680	1920	2160	2400	2640	2880
			l/sec	0	20	24	28	32	36	40	44	48
	HP	kW	m³/h	0	72	86,4	100,8	115,2	129,6	144	158,4	172,8
8LM 110/01	17,5	13		40	32	31	30	29	28	25	22	18
8LM 110/02	35	26		79	65	63	61	59	55	50	44	37
8LM 110/03	50	37		119	97	94	91	88	83	75	67	55
8LM 110/04	75	55		158	130	126	122	118	110	100	89	74
8LM 110/05	90	66		198	162	157	152	147	138	125	111	92
8LM 110/06	100	75	H (m)	238	194	188	182	176	165	149	133	111
8LM 110/07	125	92		277	227	220	213	206	193	174	155	129
8LM 110/08D	150	110		317	259	251	243	235	220	199	177	147
8LM 110/09D	150	110		356	292	283	273	264	248	224	200	166
8LM 110/10D	175	130		396	324	314	304	294	275	249	222	184
8LM 110/11D	200	150		436	356	345	334	323	303	274	244	203
8LM 110/12D	200	150		475	389	377	365	353	330	299	266	221

Max Eff. % =	77
Max kW / St. =	12,5

NPSH (m)	Q=25%	Q=50%	Q=75%	Q=100%
	2,5	2,9	3,9	7,8

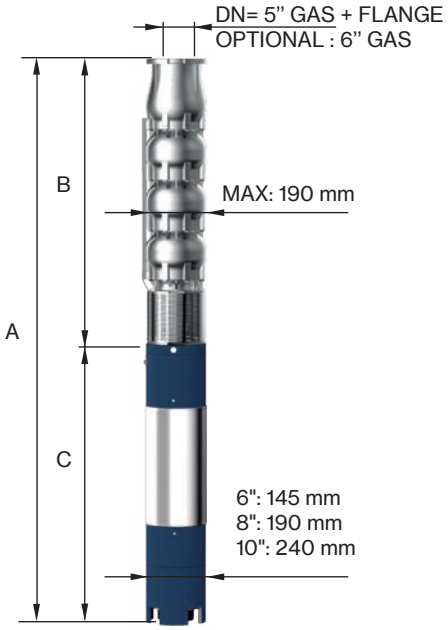

TYPE	MOTOR BRACKET	DIMENSIONS (mm)			WEIGHT (kg)	
		A	B	C	MOTOR	PUMP
8LM 110/01	6" NEMA	1366	525	841	70	19
8LM 110/02		1831	650	1181	100	26
8LM 110/03		2116	775	1341	118	33
8LM 110/04	8" NEMA	2133	900	1233	200	40
8LM 110/05		2328	1025	1303	214	47
8LM 110/06		2533	1150	1383	230	53
8LM 110/07		2858	1275	1583	270	60
8LM 110/08D		3133	1400	1733	300	67
8LM 110/09D		3258	1525	1733	300	74
8LM 110/10D	10"	3284	1650	1634	385	81
8LM 110/11D		3509	1775	1734	415	87
8LM 110/12D		3634	1900	1734	415	94

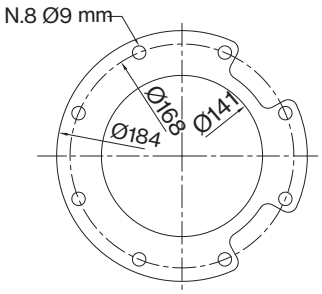

FOR COMMERCIAL TUBE
EXTERNAL DIAMETER: 139,7 mm

8LM 110

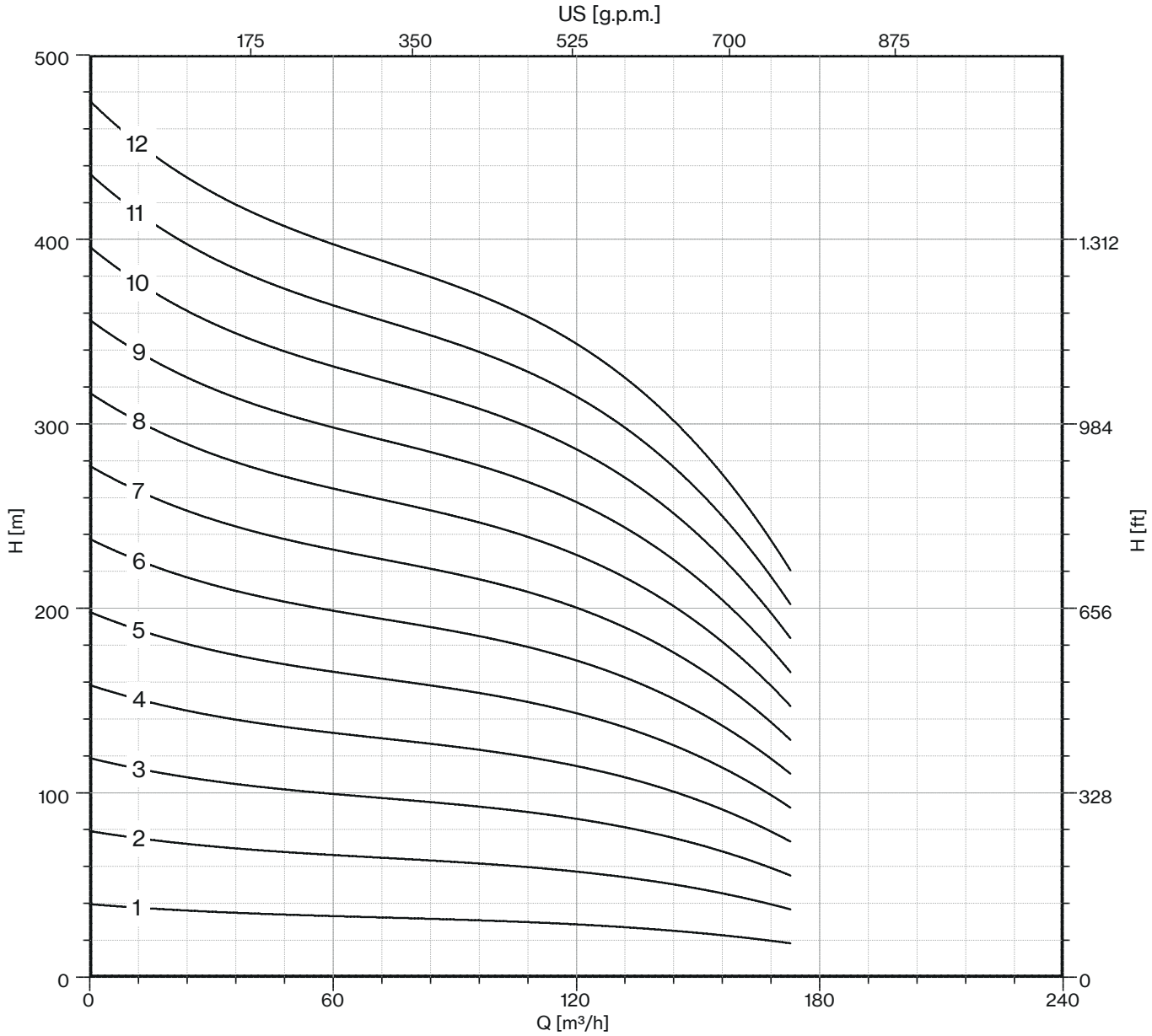

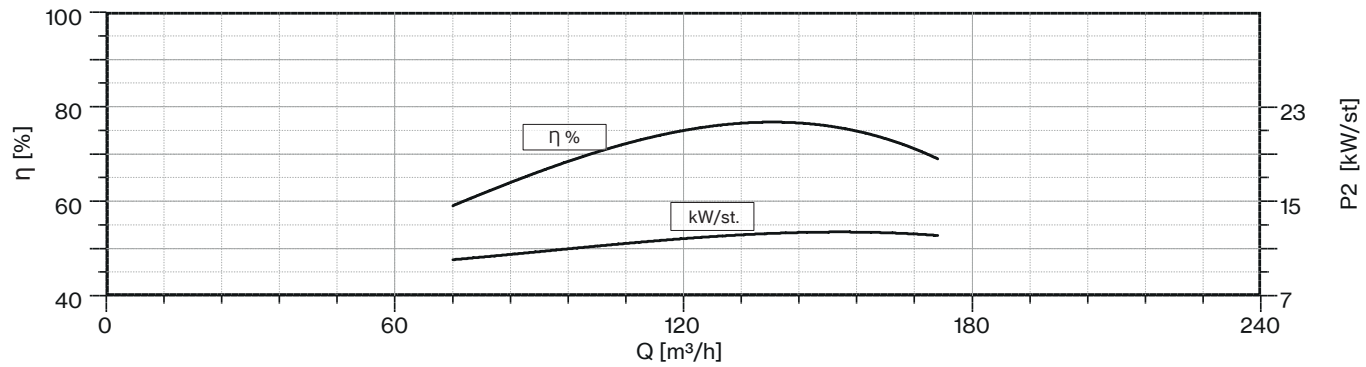

Drinking water compatibility according DM 174
MEI ≥ 0,4 (regulation EU N. 547/2012)
Models with less than 3 stages reduce the % eff. of 5%
Hydraulic performance according to ISO 9906 grade 3B

60 Hz - 3500 rpm				Q									
TYPE	P2		l/min	0	1433	1683	1917	2167	2400	2633	2883	3117	3367
			l/sec	0	23,9	28,1	31,9	36,1	40,0	43,9	48,1	51,9	56,1
	HP	kW	m³/h	0	86	101	115	130	144	158	173	187	202
8LM 130/01	20	15	H (m)	39	32	31	30	29	27	26	24	21	17
8LM 130/02	40	30		78	65	62	60	57	55	52	47	42	35
8LM 130/03	60	45		117	97	93	89	86	82	78	71	63	52
8LM 130/04	90	66		156	130	124	119	114	109	104	94	84	69
8LM 130/05	100	75		194	162	155	149	143	137	130	118	104	86
8LM 130/06	125	92		233	194	186	179	171	164	156	142	125	104
8LM 130/07D	150	110		272	227	217	209	200	192	181	165	146	121
8LM 130/08D	175	130		311	259	248	238	228	219	207	189	167	138
8LM 130/09D	175	130		350	292	279	268	257	246	233	213	188	156
8LM 130/10D	200	150		389	324	310	298	285	274	259	236	209	173

Max Eff. % =	78
Max kW / St. =	14,5

NPSH (m)	Q=25%	Q=50%	Q=75%	Q=100%
	2,5	3	3,5	8,7

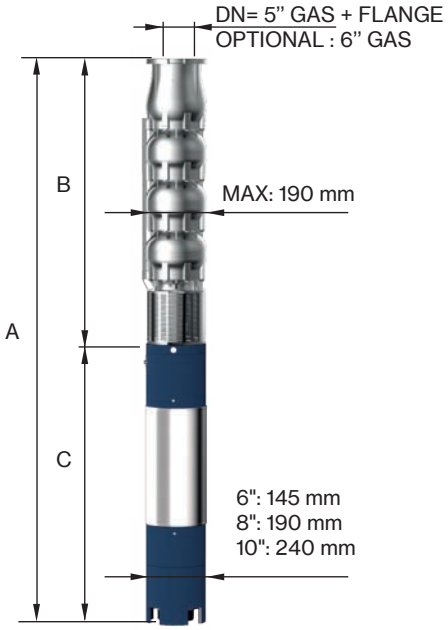

TYPE	MOTOR BRACKET	DIMENSIONS (mm)			WEIGHT (kg)	
		A	B	C	MOTOR	PUMP
8LM 130/01-6	6" NEMA	1456	525	931	75	20
8LM 130/02-6		1901	650	1251	108	27
8LM 130/03	8" NEMA	1898	775	1123	178	34
8LM 130/04		2203	900	1303	214	41
8LM 130/05		2408	1025	1383	230	48
8LM 130/06		2733	1150	1583	270	55
8LM 130/07D		3008	1275	1733	300	62
8LM 130/08D-10	10"	3034	1400	1634	385	69
8LM 130/09D-10		3159	1525	1634	385	76
8LM 130/10D-10		3384	1650	1734	415	83

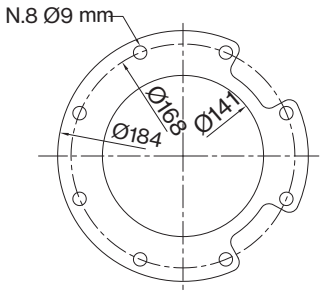

FOR COMMERCIAL TUBE
EXTERNAL DIAMETER: 139,7 mm

"D" Pump shaft in Duplex EN 1.4462

8LM 130

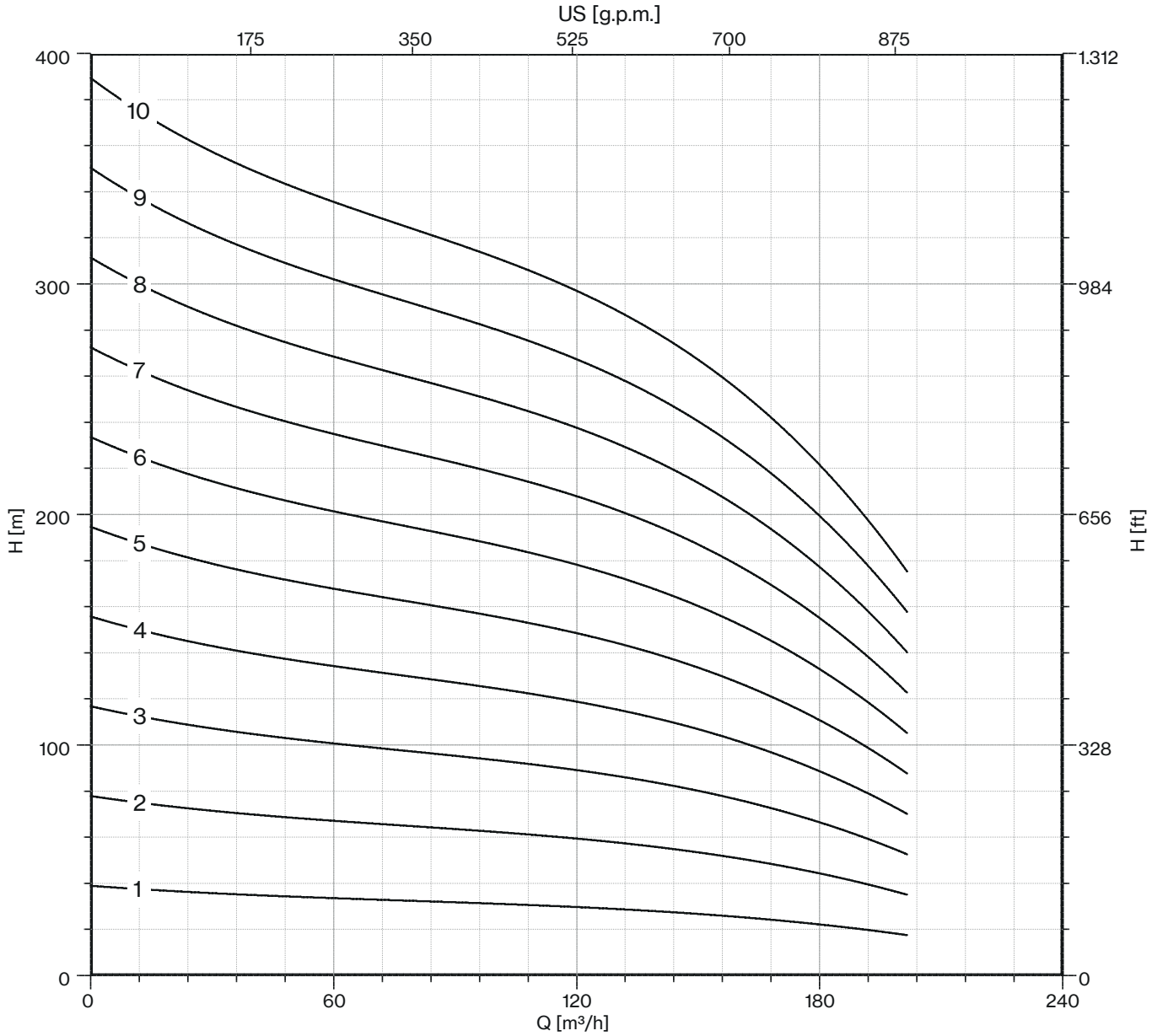

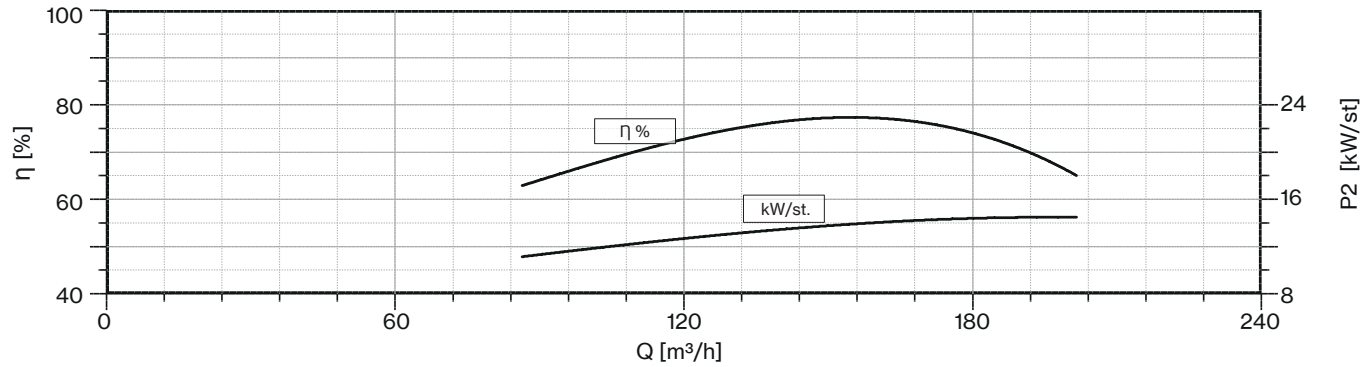

Drinking water compatibility according DM 174
MEI ≥ 0,4 (regulation EU N. 547/2012)
Models with less than 3 stages reduce the % eff. of 5%
Hydraulic performance according to ISO 9906 grade 3B

60 Hz - 3500 rpm				Q									
TYPE	P2		l/min	0	1920	2160	2400	2640	2880	3120	3360	3600	3840
			l/sec	0	32	36	40	44	48	52	56	60	64
	HP	kW	m³/h	0	115,2	129,6	144	158,4	172,8	187,2	201,6	216	230,4
8LM 160/01	25	18,5	H (m)	36	29	28	27	26	25	24	22	20	17
8LM 160/02	50	37		72	58	56	54	52	50	48	45	40	35
8LM 160/03	75	55		108	86	83	81	78	75	72	67	60	52
8LM 160/04	90	66		144	115	111	108	104	100	96	89	79	69
8LM 160/05	125	92		180	144	139	135	130	125	120	112	99	86
8LM 160/06D	150	110		216	173	167	162	156	150	143	134	119	104
8LM 160/07D	175	130		252	202	195	190	182	175	167	156	139	121
8LM 160/08D	175	130		288	230	222	217	209	200	191	179	159	138
8LM 160/09D	200	150		324	259	250	244	235	226	215	201	179	156

Max Eff. % =	78,5
Max kW / St. =	9,3

NPSH (m)	Q=25%	Q=50%	Q=75%	Q=100%
	4	4,5	7	13

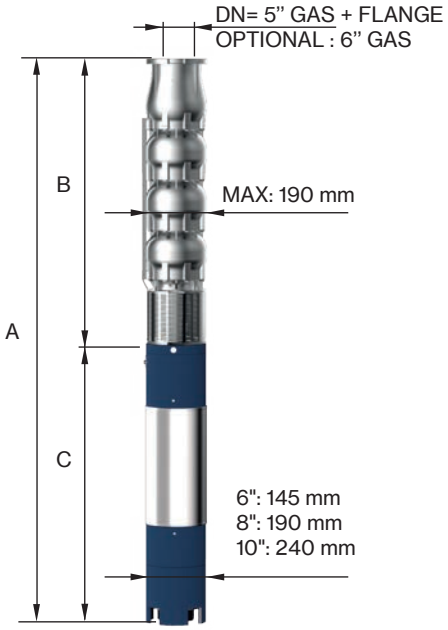

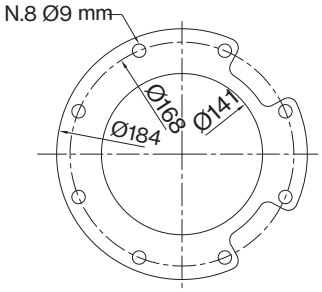

FOR COMMERCIAL TUBE
EXTERNAL DIAMETER: 139,7 mm

TYPE	MOTOR BRACKET	DIMENSIONS (mm)			WEIGHT (kg)	
		A	B	C	MOTOR	PUMP
8LM 160/01-6	6" NEMA	1541	550	991	83	20
8LM 160/02-6		2041	700	1341	118	28
8LM 160/03	8" NEMA	2083	850	1233	200	35
8LM 160/04		2303	1000	1303	214	43
8LM 160/05		2733	1150	1583	270	50
8LM 160/06D		3033	1300	1733	300	58
8LM 160/07D-10	10"	3084	1450	1634	385	65
8LM 160/08D-10		3234	1600	1634	385	73
8LM 160/09D-10		3484	1750	1734	415	80

8LM 160

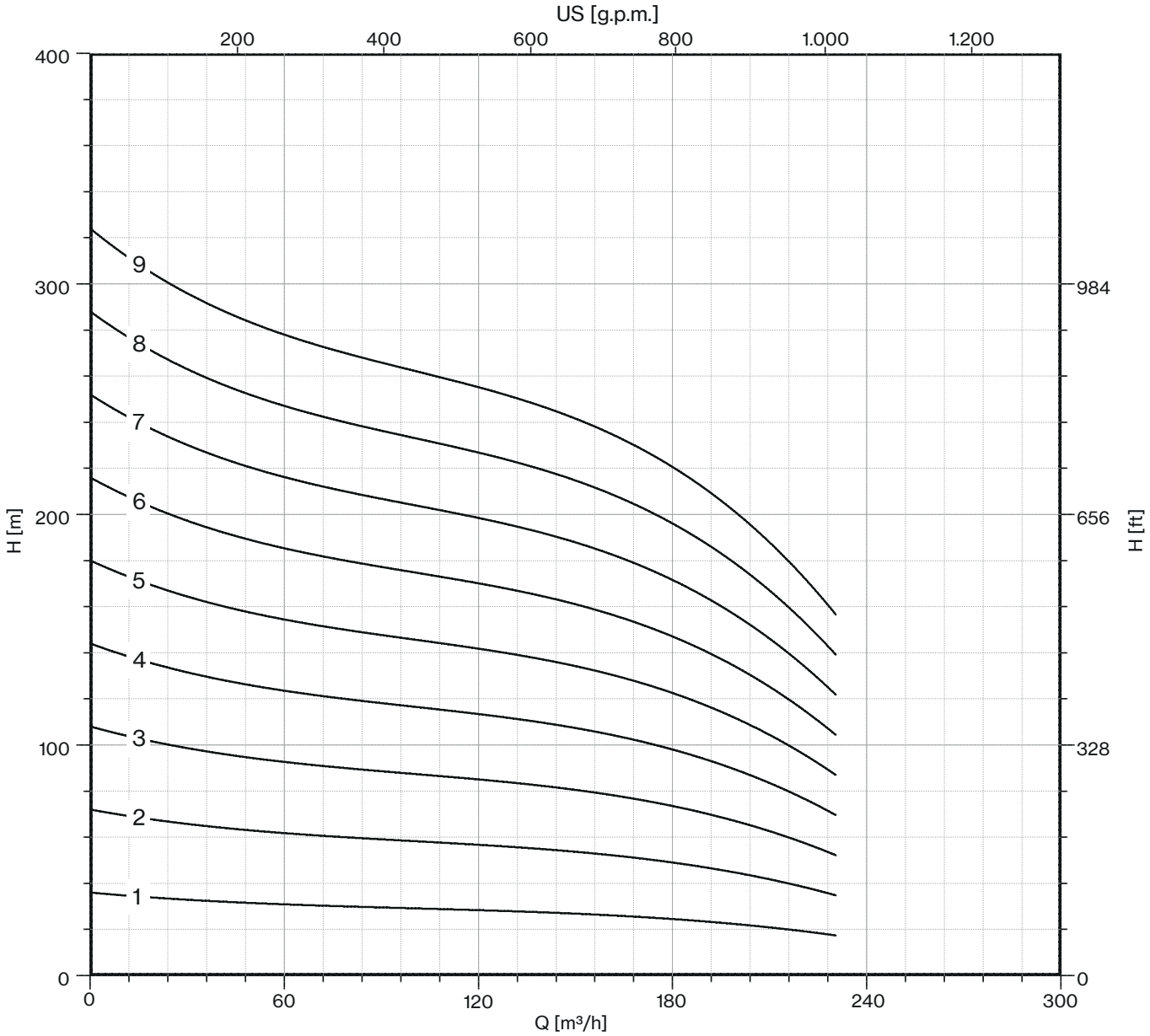

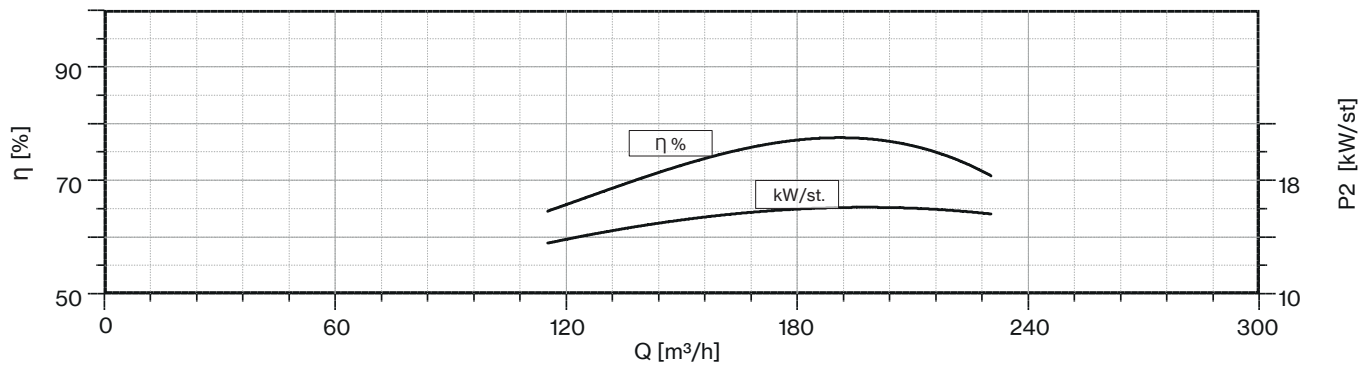

Drinking water compatibility according DM 174
MEI ≥ 0,4 (regulation EU N. 547/2012)
Models with less than 3 stages reduce the % eff. of 5%
Hydraulic performance according to ISO 9906 grade 3B

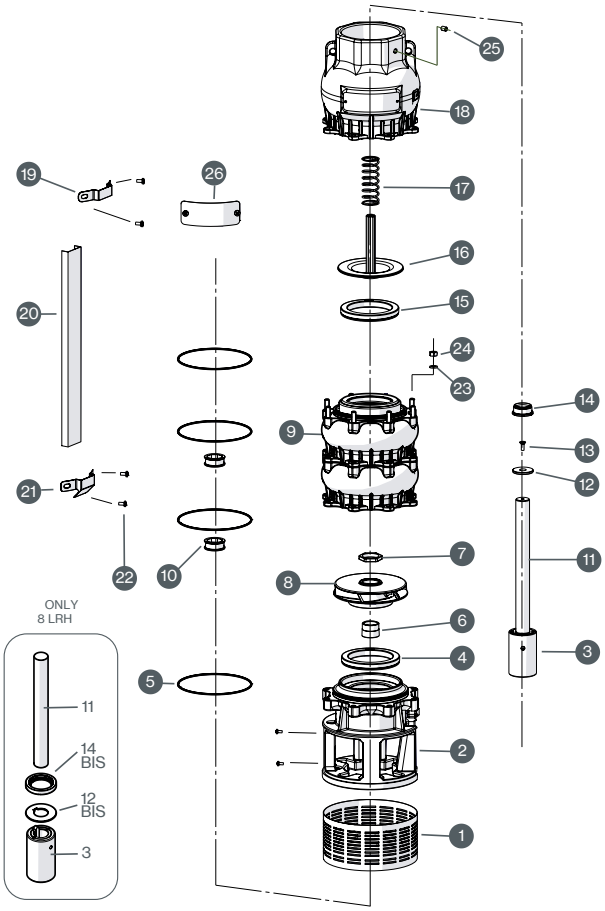

N. CODE	DESCRIPTION	LRHS EXECUTION	LRHX EXECUTION	LRHD EXECUTION	(*) Q.TY
1	**SUCTION STRAINER**	AISI 304	AISI 316	Duplex EN 1.4462	-
2	**MOTOR BRACKET**	AISI 304	AISI 316	Duplex EN 1.4462	-
3	**COUPLING**	AISI 304	AISI 316	Duplex EN 1.4462	1
4	**WEAR RING**	NBR	NBR	NBR	N° of Stages
5	**O-RING**	NBR	NBR	NBR	N° of Stages
6	**CONE**	AISI 304	AISI 316	Duplex EN 1.4462	N° of Stages
7	**HEXAGONAL RING**	AISI 304	AISI 316	Duplex EN 1.4462	N° of Stages
8	**IMPELLER**	AISI 304	AISI 316	Duplex EN 1.4462	N° of Stages
9	**DIFFUSER**	AISI 304	AISI 316	Duplex EN 1.4462	-
10	**BEARING BUSH**	NBR	NBR	NBR	N° of Stages
11	**SHAFT**	AISI 304	AISI 316	Duplex EN 1.4462	1
12	**DISK**	AISI 304	AISI 316	Duplex EN 1.4462	-
13	**SCREW**	AISI 304	AISI 316	Duplex EN 1.4462	-
14	**COUNTERTHRUST**	PTFE+25% CARBON	PTFE+25% CARBON	PTFE+25% CARBON	1
15	**GASKET VALVE**	NBR	NBR	NBR	1
16	**VALVE**	AISI 304	AISI 316	Duplex EN 1.4462	-
17	**SPRING**	AISI 301	AISI 316	Duplex EN 1.4462	-
18	**BODY VALVE**	AISI 304	AISI 316	Duplex EN 1.4462	-
19	**UPPER FLANGE**	AISI 304	AISI 316	Duplex EN 1.4462	-
20	**COVER CABLE**	AISI 304	AISI 316	Duplex EN 1.4462	-
21	**LOWER FLANGE**	AISI 304	AISI 316	Duplex EN 1.4462	-
22	**SCREW M4x8**	AISI 304	AISI 316	Duplex EN 1.4462	-
23	**WASHER**	AISI 304	AISI 316	Duplex EN 1.4462	-
24	**NUT**	AISI 304	AISI 316	Duplex EN 1.4462	-
25	**GRAIN**	AISI 304	AISI 316	Duplex EN 1.4462	-
26	**METALLIC LABEL**	AISI 304	AISI 316	Duplex EN 1.4462	-

** Reccomended spare parts quantity*

6LM-8LM

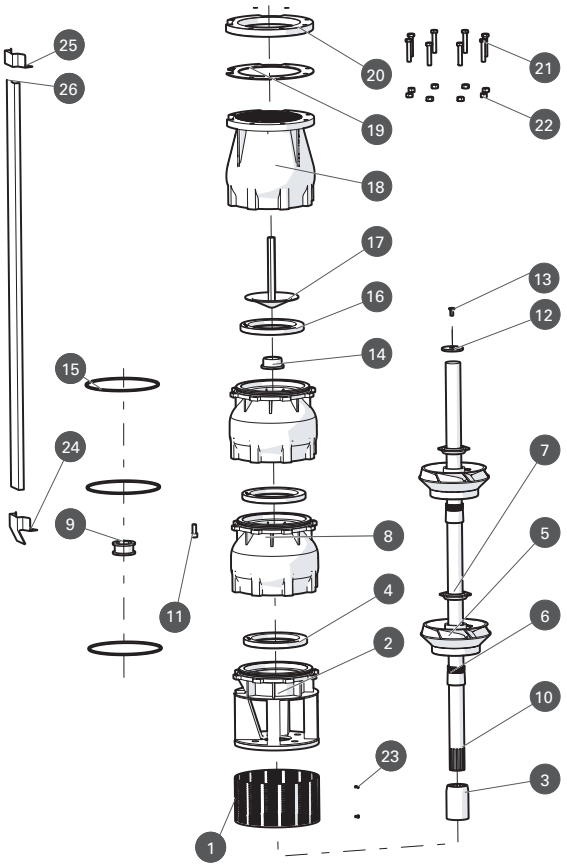

N. CODE	DESCRIPTION	LMS EXECUTION	LMX EXECUTION	LMD EXECUTION	(*) Q.TY
1	**SUCTION STRAINER**	AISI 304	AISI 316	Duplex EN 1.4462	-
2	**MOTOR BRACKET**	AISI 304	AISI 316	Duplex EN 1.4462	-
3	**COUPLING**	AISI 304	AISI 316	Duplex EN 1.4462	1
4	**WEAR RING**	NBR	NBR	NBR	N° of Stages
5	**IMPELLER**	AISI 304	AISI 316	Duplex EN 1.4462	-
6	**CONE**	AISI 304	AISI 316	Duplex EN 1.4462	N° of Stages
7	**HEXAGONAL RING**	AISI 304	AISI 316	Duplex EN 1.4462	N° of Stages
8	**DIFFUSEUR**	AISI 304	AISI 316	Duplex EN 1.4462	-
9	**BEARING BUSH**	NBR	NBR	NBR	N° of Stages
10	**PUMP SHAFT**	AISI 304	AISI 316	Duplex EN 1.4462	1
11	**N.8 SCREW FOR DIFFUSEUR**	AISI 304	AISI 316	Duplex EN 1.4462	-
12	**RING**	AISI 304	AISI 316	Duplex EN 1.4462	1
13	**SCREW FOR DISK**	AISI 304	AISI 316	Duplex EN 1.4462	1
14	**COUNTERTHRUST**	PTFE + 25% CARBON	PTFE + 25% CARBON	PTFE + 25% CARBON	1
15	**O-RING**	NBR	NBR	NBR	N° of Stages
16	**GASKET VALVE**	NBR	NBR	NBR	1
17	**CAP VALVE**	AISI 304	AISI 316	Duplex EN 1.4462	-
18	**BODY VALVE**	AISI 304	AISI 316	Duplex EN 1.4462	-
19	**SEAL COUNTERFLANGE**	NBR	NBR	NBR	1
20	**COUNTERFLANGE**	AISI 304	AISI 316	Duplex EN 1.4462	-
21	**N.8 SCREW FOR COUNTERFLANGE**	AISI 304	AISI 316	Duplex EN 1.4462	-
22	**N.8 NUT FOR COUNTERFLANGE**	AISI 304	AISI 316	Duplex EN 1.4462	-
23	**N.2 SCREW FOR SUCTION STRAINER**	AISI 304	AISI 316	Duplex EN 1.4462	-
24	**LOWER CLAMP**	AISI 304	AISI 316	Duplex EN 1.4462	-
25	**UPPER CLAMP**	AISI 304	AISI 316	Duplex EN 1.4462	-
26	**COVER CABLE**	AISI 304	AISI 316	Duplex EN 1.4462	-

** Reccomended spare parts quantity*

10-12LM & E14 line

Submersible Multistage Centrifugal Pumps for 10”, 12”, and 14” Wells.
These pumps are equipped with a check valve integrated into the delivery outlet.
The pump motor bracket and coupling are designed in accordance with NEMA standards, ensuring reliability and compatibility.
Common applications include civil and agricultural uses. All components are manufactured from stainless steel using lost wax microfusion technology. The standard material is AISI 304 stainless steel, with the following materials available upon request: AISI 316 stainless steel, Duplex steel (EN 1.4462), and AISI 904L stainless steel.
The bushing bearings and wear rings are made from sand abrasion-resistant rubber, while the reverse-thrust ring is constructed from PTFE/Graphite for enhanced durability and performance.

General operating data:

- Capacity up to 1.000 m³/h
- Pressure up to 389 m
- Hydraulic efficiency 10”, up to 79,3%
- Hydraulic efficiency 12”, up to 82,5%
- Hydraulic efficiency 14”, up to 82,3%
- Powers up to 400 kW
- Rotation speed 3.600 rpm
- Maximum depth: 350 m
- Maximum quantity of sand: 100 gr/m³
- Drinking water compatibility according to DM174 MEI >= 0,4 (EU directive No.547/2012)
- Performance tolerance: ISO9906-3B.

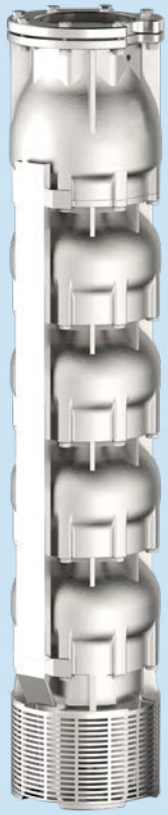

10LM line

12LM line

E14

Construction features

Suction and delivery outlet	stainless steel AISI 304 (LMS) stainless steel AISI 316 (LMX - EX) Duplex EN 1.4462 (LMD - ED) Cast iron (E)
Valve	stainless steel AISI 304 (LMS) stainless steel AISI 316 (LMX - EX) Duplex EN 1.4462 (LMD - ED) Cast iron (E)
Impellers and diffusers	stainless steel AISI 304 (LMS) stainless steel AISI 316 (LMX - EX) Duplex EN 1.4462 (LMD - ED) Cast iron (E)
Upper bushings	NBR rubber
Shaft pump side	stainless steel AISI 304 (LMS) stainless steel AISI 316 (LMX) Duplex EN 1.4462 (LMD) AISI 431 (E - EX - ED)
Quantity of sand in the water	max 100 g/m³

Motor

Asynchronous 2 pole	rewindable water cooled
Insulation class	Y (max 30 °C) - PPC winding type F (max 50 °C) - PE2+PA or LPE winding type
Protection degree	IP68
Liquid temperature	max 30 °C (max 50 °C on request)
Depth of immersion	max 350 m

10LM 190

60 Hz - 3500 rpm				Q							
TYPE	P2		l/min	0	2160	2640	3120	3600	4080	4560	4800
			l/sec	0	36	44	52	60	68	76	80
	HP	kW	m³/h	0	129,6	158,4	187,2	216	244,8	273,5	287,9
10LM 190/01DR20	40	30		50	46	43	39	35	30	24	20
10LM 190/01DR10	50	37		55	50	48	44	40	35	29	25
10LM 190/01	50	37		60	55	52	49	45	40	34	30
10LM 190/02DR20	75	55		100	91	86	79	70	59	47	40
10LM 190/02DR10	90	66		109	101	95	88	79	69	57	50
10LM 190/02	100	75		120	111	105	98	89	79	67	59
10LM 190/03DR20	125	92		149	137	129	118	105	89	71	60
10LM 190/03DR10D	150	110		164	151	143	132	119	104	86	75
10LM 190/03D	150	110	H	180	166	157	147	134	119	101	89
10LM 190/04DR20D	150	110	(m)	199	182	172	158	141	119	94	81
10LM 190/04DR10D	175	130		219	202	190	176	159	138	114	100
10LM 190/04D	200	150		240	221	210	196	179	159	135	119
10LM 190/05DR20D	200	150		249	228	215	197	176	148	118	101
10LM 190/05DR10D	225	165		274	252	238	220	199	173	143	125
10LM 190/05D	250	185		300	276	262	245	223	199	168	148
10LM 190/06DR20D	225	165		299	273	257	237	211	178	142	121
10LM 190/06DR10D	300	220		328	302	285	264	238	207	171	150
10LM 190/06D	300	220		359	332	314	294	268	238	202	178

Max Eff. % DR20 =	77
Max Eff. % DR10 =	77,5
Max Eff. % =	76,5
Max kW / St. DR20 =	36
Max kW / St. DR10 =	32
Max kW / St. =	27,7

NPSH (m)	Q=25%	Q=50%	Q=75%	Q=100%
	3,4	5	7,8	11,8

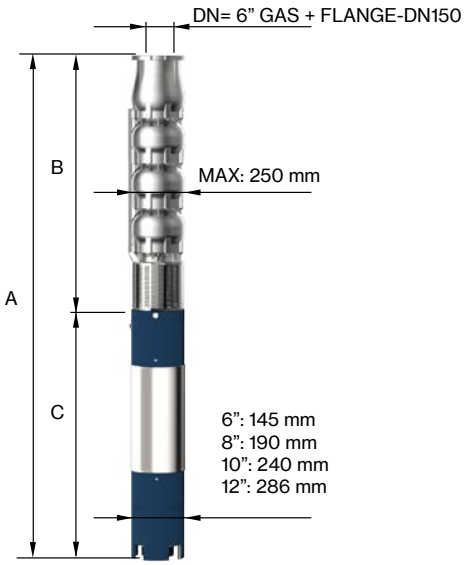

TYPE	MOTOR BRACKET	DIMENSIONS (mm)			WEIGHT (kg)	
		A	B	C	MOTOR	PUMP
10LM 190/01DR20-6	6" NEMA	1876	625	1251	108	41
10LM 190/01DR10-6		1966	625	1341	118	41
10LM 190/01-6		1966	625	1341	118	41
10LM 190/02DR20-8	8" NEMA	2038	805	1233	200	56
10LM 190/02DR10-8		2108	805	1303	214	56
10LM 190/02-8		2188	805	1383	230	56
10LM 190/03DR20-8		2568	985	1583	270	72
10LM 190/03DR10D-8		2718	985	1733	300	72
10LM 190/03D-8		2718	985	1733	300	72
10LM 190/04DR20D-8		2898	1165	1733	300	87
10LM 190/04DR10D	10"	2799	1165	1634	385	87
10LM 190/04D		2899	1165	1734	415	87
10LM 190/05DR20D		3079	1345	1734	415	103
10LM 190/05DR10D		3199	1345	1854	444	103
10LM 190/05D		3329	1345	1984	480	103
10LM 190/06DR20D		3379	1525	1854	444	118
10LM 190/06DR10D-12	12"	3635	1525	2110	700	118
10LM 190/06D-12		3635	1525	2110	700	118

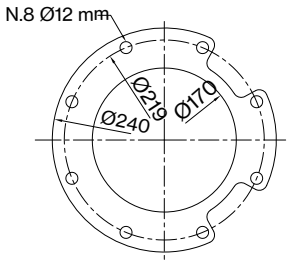

FOR COMMERCIAL TUBE
EXTERNAL DIAMETER: 168,3 mm

"DR" : reduced-diameter impellers
"D" Pump shaft in Duplex EN 1.4462

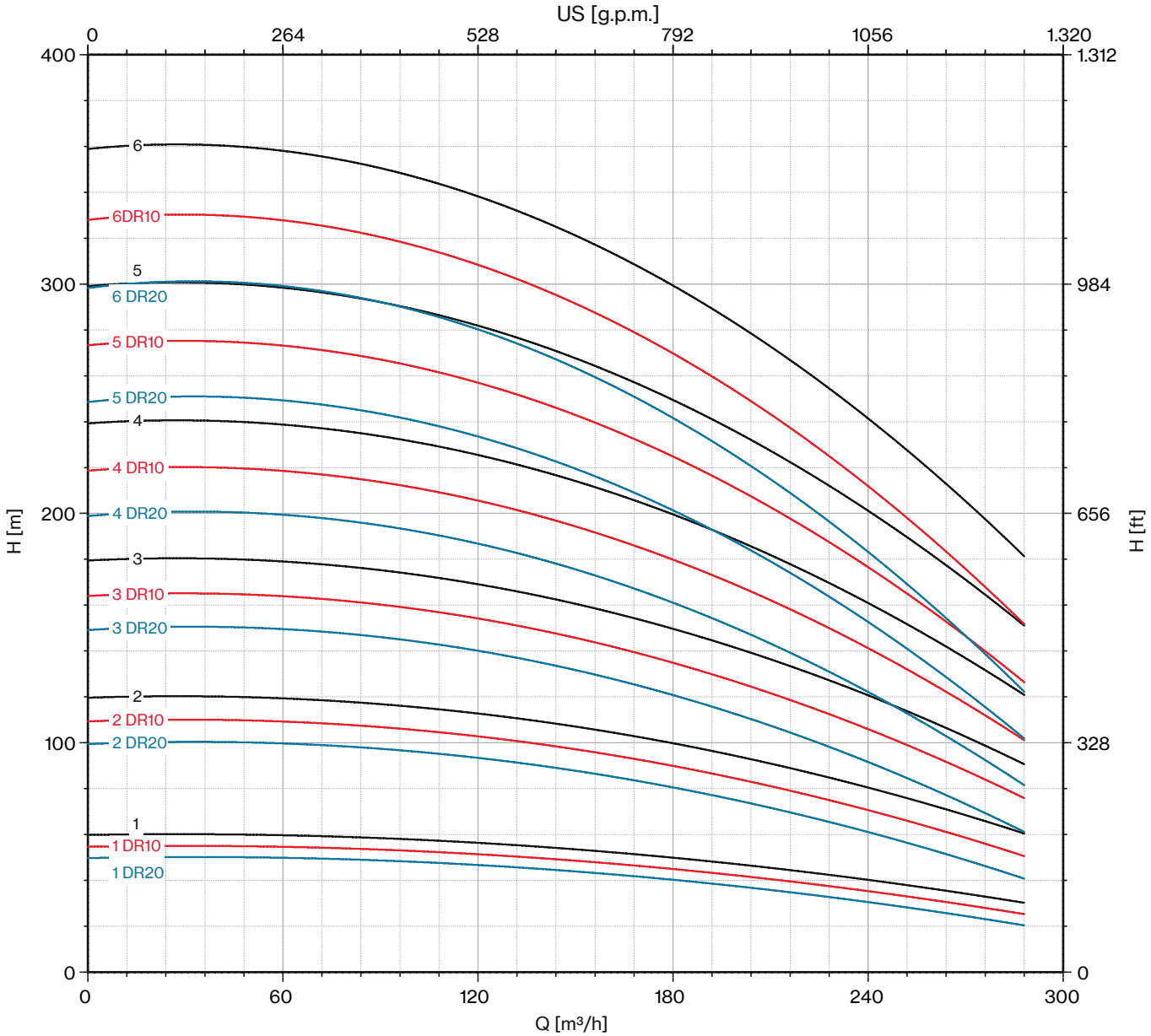
US [g.p.m.]
0
264
528
792
1056
1.320
1.312
984
656
328
0
400
300
200
100
0
H [m]
H [ft]
6
6DR10
5
6 DR20
5 DR10
5 DR20
4
4 DR10
4 DR20
3
3 DR10
3 DR20
2
2 DR10
2 DR20
1
1 DR10
1 DR20
0
60
120
180
240
300
Q [m³/h]

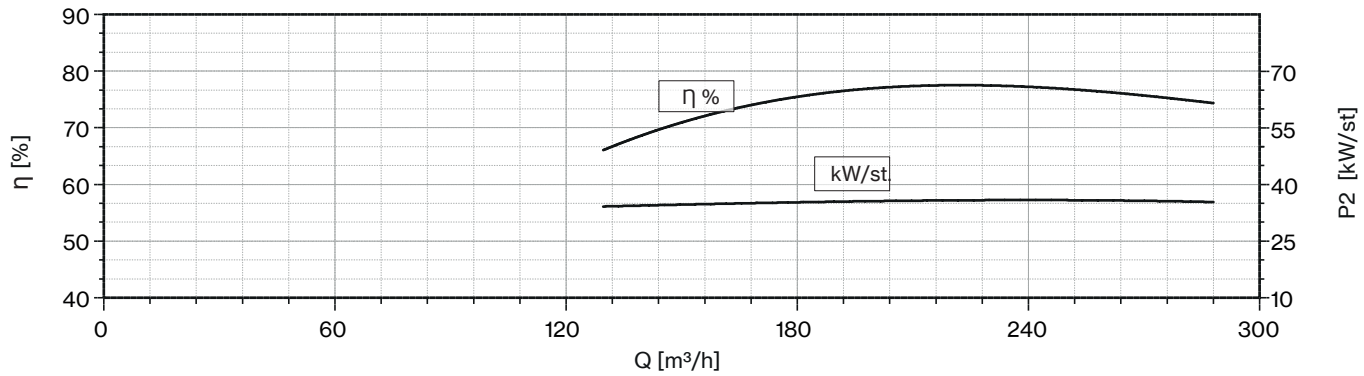
90
80
70
60
50
40
η [%]
70
55
40
25
10
P2 [kW/st]
η %
kW/st
0
60
120
180
240
300
Q [m³/h]

10LM 230

60 Hz - 3500 rpm				Q							
TYPE	P2		l/min	0	2640	3120	3600	4080	4560	5040	5520
			l/sec	0	44	52	60	68	76	84	92
	HP	kW	m³/h	0	158,4	187,2	216	244,8	273,5	302,3	331,1
10LM 230/01DR20	40	30		53	45	42	39	36	33	27	23
10LM 230/01DR10	50	37		58	49	47	44	41	37	33	28
10LM 230/01	60	45		63	54	52	49	46	43	38	33
10LM 230/02DR20	90	66		106	89	84	78	72	65	55	46
10LM 230/02DR10	90	66		116	98	94	88	82	75	66	56
10LM 230/02	125	92		126	108	104	98	92	85	76	66
10LM 230/03DR20	125	92		159	134	125	117	108	98	82	69
10LM 230/03DR10D	150	110		175	147	141	132	124	112	98	85
10LM 230/03D	175	130	H	189	162	156	147	138	128	114	99
10LM 230/04DR20 D	175	130	(m)	212	179	167	156	144	130	109	92
10LM 230/04DR10 D	200	150		233	196	188	176	165	150	131	113
10LM 230/04D	225	165		252	217	207	196	184	170	152	132
10LM 230/05DR20D	225	165		265	223	209	194	180	163	137	115
10LM 230/05DR10D	250	185		291	245	235	220	206	187	164	141
10LM 230/05D	300	220		315	271	259	245	230	213	190	166
10LM 230/06DR20D	250	185		318	268	251	233	216	195	164	138
10LM 230/06DR10D	300	220		349	294	282	264	247	225	197	169
10LM 230/06D	340	250		378	325	311	294	276	256	228	199

Max Eff. % DR20 =	79,2
Max Eff. % DR10 =	79,5
Max Eff. % =	78,4
Max kW / St. DR20 =	39,4
Max kW / St. DR10 =	33,7
Max kW / St. =	30,3

NPSH (m)	Q=25%	Q=50%	Q=75%	Q=100%
	3,4	5	7,8	11,8

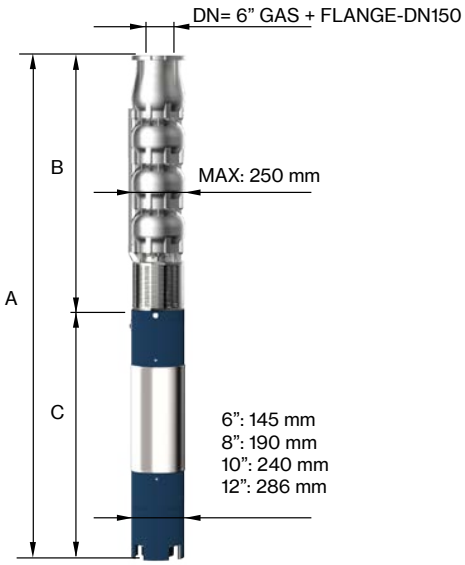

TYPE	MOTOR BRACKET	DIMENSIONS (mm)			WEIGHT (kg)	
		A	B	C	MOTOR	PUMP
10LM 230/01DR20-6	6" NEMA	1876	625	1251	108	41
10LM 230/01DR10-6		1966	625	1341	118	41
10LM 230/01-8	8" NEMA	1748	625	1123	178	41
10LM 230/02DR20-8		2108	805	1303	214	56
10LM 230/02DR10-8		2108	805	1303	214	56
10LM 230/02-8		2388	805	1583	270	56
10LM 230/03DR20-8		2568	985	1583	270	72
10LM 230/03DR10D-8		2718	985	1733	300	72
10LM 230/03D	10"	2619	985	1634	385	72
10LM 230/04DR20D		2799	1165	1634	385	87
10LM 230/04DR10D		2899	1165	1734	415	87
10LM 230/04D		3019	1165	1854	444	87
10LM 230/05DR20D		3199	1345	1854	444	103
10LM 230/05DR10D		3329	1345	1984	480	103
10LM 230/05D-12	12"	3455	1345	2110	700	103
10LM 230/06DR20D	10"	3509	1525	1984	480	118
10LM 230/06DR10D-12	12"	3635	1525	2110	700	118
10LM 230/06D-12		3805	1525	2280	775	118

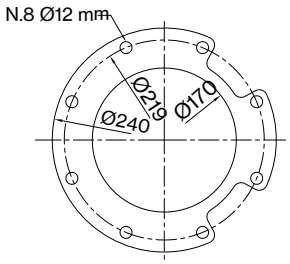

FOR COMMERCIAL TUBE
EXTERNAL DIAMETER: 168,3 mm

"DR" : reduced-diameter impellers
"D" Pump shaft in Duplex EN 1.4462

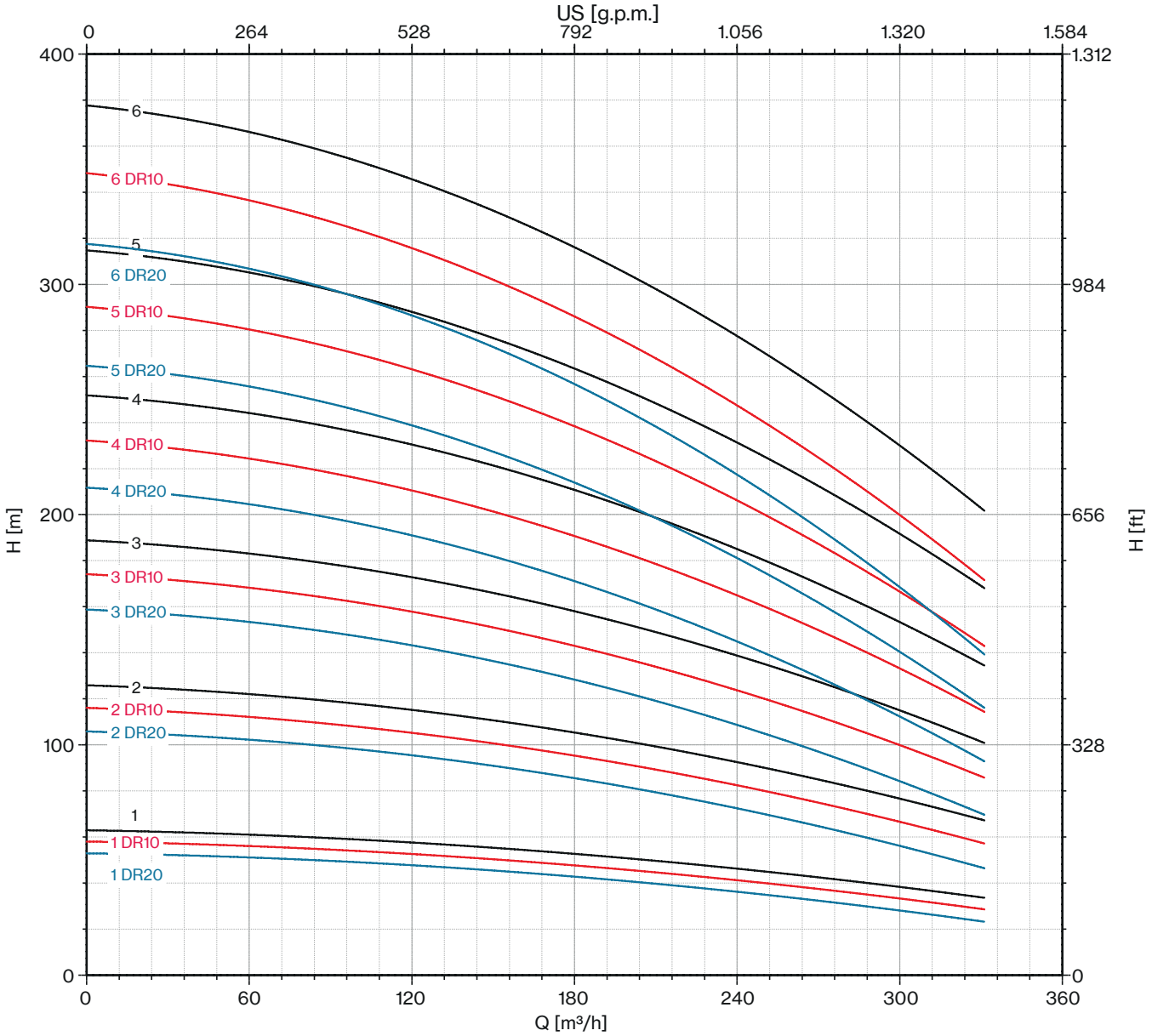
US [g.p.m.]
0
264
528
792
1.056
1.320
1.584
400
300
200
100
0
1.312
984
656
328
0
H [m]
H [ft]
6
6 DR10
5
6 DR20
5 DR10
5 DR20
4
4 DR10
4 DR20
3
3 DR10
3 DR20
2
2 DR10
2 DR20
1
1 DR10
1 DR20
0
60
120
180
240
300
360
Q [m³/h]

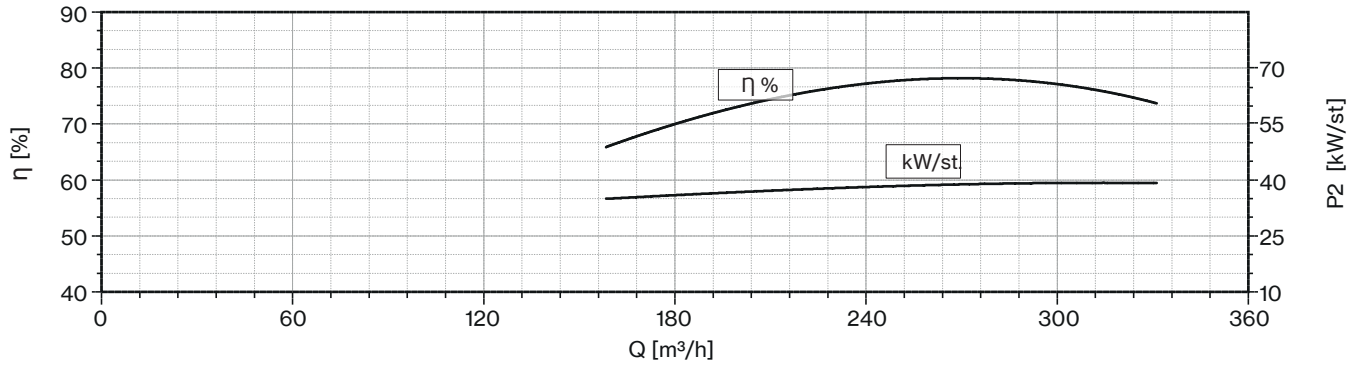
90
80
70
60
50
40
70
55
40
25
10
η [%]
P2 [kW/st]
η %
kW/st
0
60
120
180
240
300
360
Q [m³/h]

10LM 250

60 Hz - 3500 rpm				Q									
TYPE	P2		l/min	0	2880	3360	3840	4320	4800	5280	5760	6000	6240
			l/sec	0	48	56	64	72	80	88	96	100	104
	HP	kW	m³/h	0	172,8	201,6	230,4	259,1	287,9	316,7	345,5	359,9	374,3
10LM 250/01DR20	40	30		45	42	41	39	36	33	30	26		
10LM 250/01DR10	50	37		52	48	46	45	41	39	35	31	29	
10LM 250/01	60	45		63	53	50	48	46	43	40	37	36	35
10LM 250/02DR20	90	66		90	84	81	78	73	67	60	51		
10LM 250/02DR10	90	66		103	96	93	89	83	77	70	63	57	
10LM 250/02	125	92		127	105	100	97	92	85	80	75	72	69
10LM 250/03DR20	125	92		135	126	122	117	109	100	91	77		
10LM 250/03DR10D	150	110		155	143	139	134	124	116	105	94	86	
10LM 250/03D	175	130	H	190	158	149	145	138	128	120	112	108	104
10LM 250/04DR20D	175	130	(m)	180	168	162	156	145	134	121	103		
10LM 250/04DR10D	200	150		206	191	185	179	166	154	139	126	114	
10LM 250/04D	225	165		253	211	199	194	184	170	160	150	144	138
10LM 250/05DR20D	225	165		225	210	203	194	181	167	151	128		
10LM 250/05DR10D	250	185		258	239	232	223	207	193	174	157	143	
10LM 250/05D	300	220		317	264	249	242	230	213	200	187	180	173
10LM 250/06DR20D	250	185		270	252	244	233	218	200	181	154		
10LM 250/06DR10D	300	220		309	287	278	268	249	232	209	188	171	
10LM 250/06D	340	250		380	316	299	290	276	256	240	225	216	207

Max Eff. % DR20 =	79,3
Max Eff. % DR10 =	79,5
Max Eff. % =	79
Max kW / St. DR20 =	47,6
Max kW / St. DR10 =	38,9
Max kW / St. =	31,1

NPSH (m)	Q=25%	Q=50%	Q=75%	Q=100%
	3,4	5	7,8	11,8

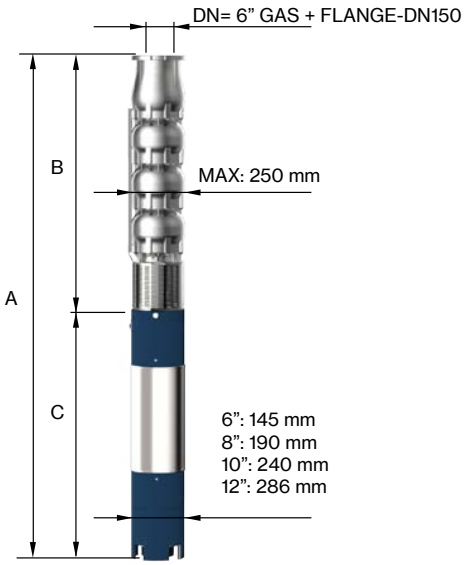

TYPE	MOTOR BRACKET	DIMENSIONS (mm)			WEIGHT (kg)	
		A	B	C	MOTOR	PUMP
10LM 250/01DR20-6	6" NEMA	1876	625	1251	108	41
10LM 250/01DR10-6		1966	625	1341	118	41
10LM 250/01-8	8" NEMA	1858	625	1233	200	41
10LM 250/02DR20-8		2108	805	1303	214	56
10LM 250/02DR10-8		2188	805	1383	230	56
10LM 250/02-8		2388	805	1583	270	56
10LM 250/03DR20-8		2568	985	1583	270	72
10LM 250/03DR10D-8		2619	985	1634	385	72
10LM 250/03D	10"	2719	985	1734	415	72
10LM 250/04DR20D		2799	1165	1634	385	87
10LM 250/04DR10D		3019	1165	1854	444	87
10LM 250/04D		3275	1165	2110	700	87
10LM 250/05DR20D		3199	1345	1854	444	103
10LM 250/05DR10D		3455	1345	2110	700	103
10LM 250/05D-12	12"	3625	1345	2280	775	103
10LM 250/06DR20D	10"	3509	1525	1984	480	118
10LM 250/06DR10D-12	12"	3805	1525	2280	775	118
10LM 250/06D-12		3805	1525	2280	775	118

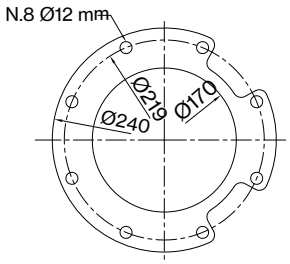

FOR COMMERCIAL TUBE
EXTERNAL DIAMETER: 168,3 mm

"DR" : reduced-diameter impellers
"D" Pump shaft in Duplex EN 1.4462

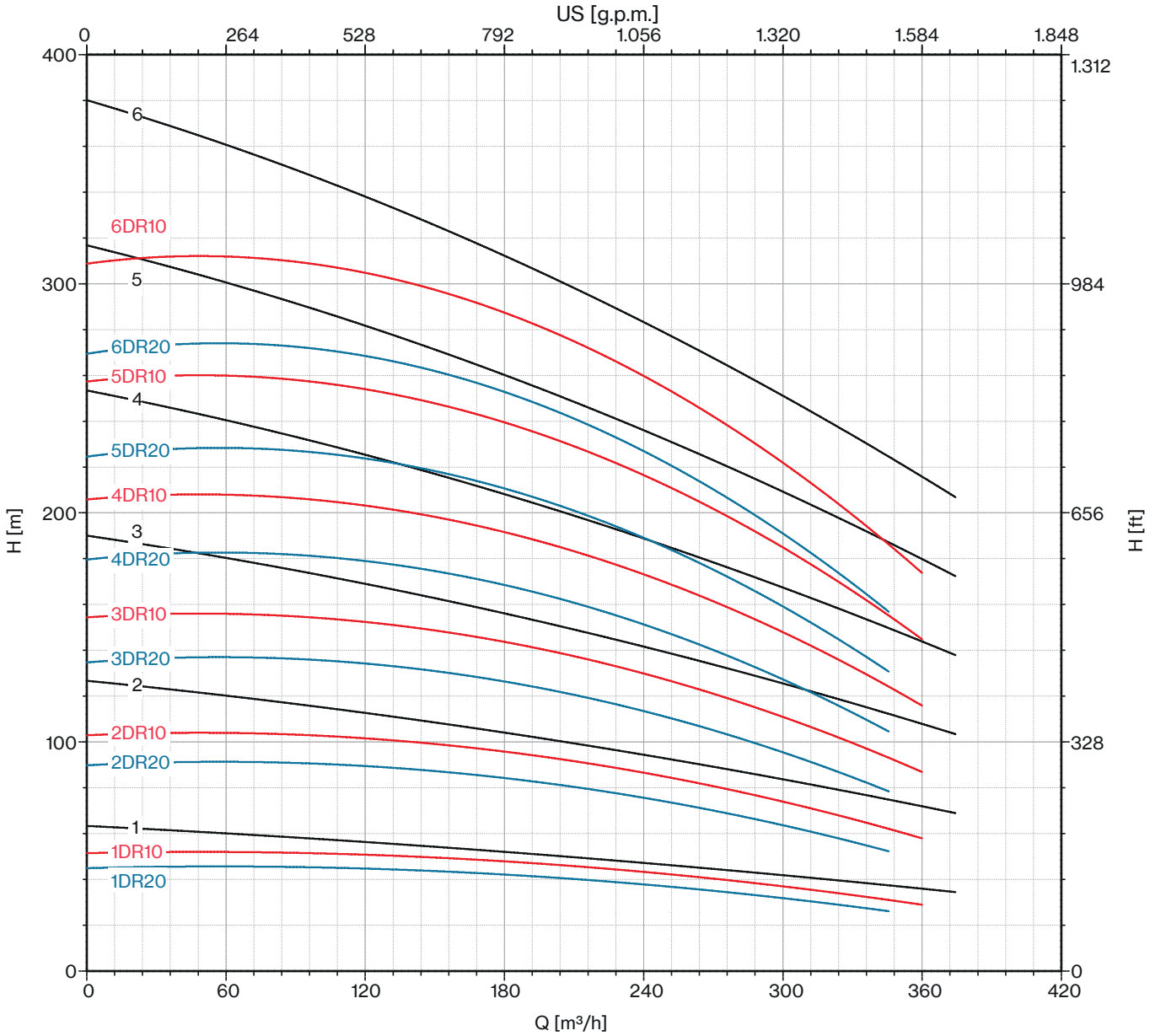
US [g.p.m.]
0
264
528
792
1.056
1.320
1.584
1.848
400
300
200
100
0
1.312
984
656
328
0
H [m]
H [ft]
6
6DR10
5
6DR20
5DR10
4
5DR20
4DR10
3
4DR20
3DR10
3DR20
2
2DR10
2DR20
1
1DR10
1DR20
0
60
120
180
240
300
360
420
Q [m³/h]

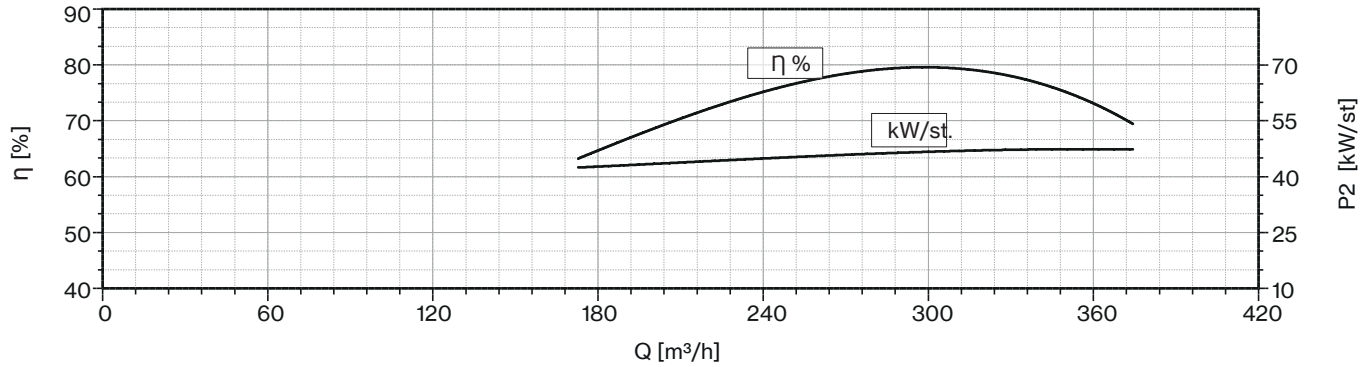
90
80
70
60
50
40
70
55
40
25
10
η [%]
P2 [kW/st]
η %
kW/st.
0
60
120
180
240
300
360
420
Q [m³/h]

10LM 275

60 Hz - 3500 rpm				Q								
TYPE	P2		l/min	0	3600	4080	4560	5040	5520	6000	6480	6960
			l/sec	0	60	68	76	84	92	100	108	116
	HP	kW	m³/h	0	216	244,8	273,5	302,3	331,1	359,9	388,7	417,5
10LM 275/01DR20	60	45		52	41	40	38	36	33	31	28	23
10LM 275/01DR10	75	55		59	48	47	44	42	39	37	35	30
10LM 275/01	90	66		65	54	53	50	48	46	43	41	36
10LM 275/02DR20	125	92		104	83	80	75	71	66	61	56	47
10LM 275/02DR10D	150	110		118	96	93	89	85	79	74	69	60
10LM 275/02D	175	130		130	108	105	101	97	91	86	81	72
10LM 275/03DR20D	175	130		156	124	120	113	107	98	92	84	70
10LM 275/03DR10D	200	150		176	144	140	133	127	118	111	104	90
10LM 275/03D	250	185	H	194	162	158	151	145	137	130	122	108
10LM 275/04DR20D	250	185	(m)	209	166	160	151	143	131	122	112	93
10LM 275/04DR10D	300	220		235	192	187	177	169	158	149	138	120
10LM 275/04D	340	250		259	217	211	202	194	182	173	162	144
10LM 275/05DR20D	300	220		261	207	200	189	179	164	153	140	117
10LM 275/05DR10D	340	250		294	240	233	222	212	197	186	173	150
10LM 275/05D	400	300		324	271	264	252	242	228	216	203	180
10LM 275/06DR20D	400	300		313	249	240	226	214	197	183	168	140
10LM 275/06DR10D	400	300		353	289	280	266	254	237	223	207	180
10LM 275/06D	500	370		389	325	316	302	290	273	259	244	216

Max Eff. % DR20 =	76,5
Max Eff. % DR10 =	77,2
Max Eff. % =	76,1
Max kW / St. DR20 =	57,1
Max kW / St. DR10 =	50,2
Max kW / St. =	43,3

NPSH (m)	Q=25%	Q=50%	Q=75%	Q=100%
	3,4	5	7,8	11,8

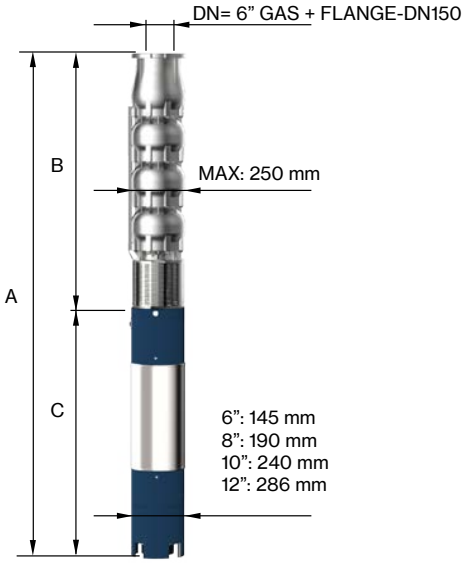

TYPE	MOTOR BRACKET	DIMENSIONS (mm)			WEIGHT (kg)	
		A	B	C	MOTOR	PUMP
10LM 275/01DR20-8	8" NEMA	1748	625	1123	178	41
10LM 275/01DR10-8		1858	625	1233	200	41
10LM 275/01-8		1928	625	1303	214	41
10LM 275/02DR20-8		2388	805	1583	270	56
10LM 275/02DR10D-8		2538	805	1733	300	56
10LM 275/02D	10"	2439	805	1634	385	56
10LM 275/03DR20D		2619	985	1634	385	72
10LM 275/03DR10D		2719	985	1734	415	72
10LM 275/03D		2969	985	1984	480	72
10LM 275/04DR20D		3149	1165	1984	480	87
10LM 275/04DR10D-12	12"	3275	1165	2110	700	87
10LM 275/04D-12		3445	1165	2280	775	87
10LM 275/05DR20D-12		3455	1345	2110	700	103
10LM 275/05DR10D-12		3625	1345	2280	775	103
10LM 275/05D-14	14"	3625	1345	2280	775	103
10LM 275/06DR20D-14		3805	1525	2280	775	118
10LM 275/06DR10D-14		3805	1525	2280	775	118
10LM 275/06D-14		3845	1525	2320	1010	118

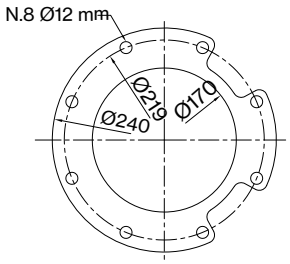

FOR COMMERCIAL TUBE
EXTERNAL DIAMETER: 168,3 mm

"DR" : reduced-diameter impellers
"D" Pump shaft in Duplex EN 1.4462

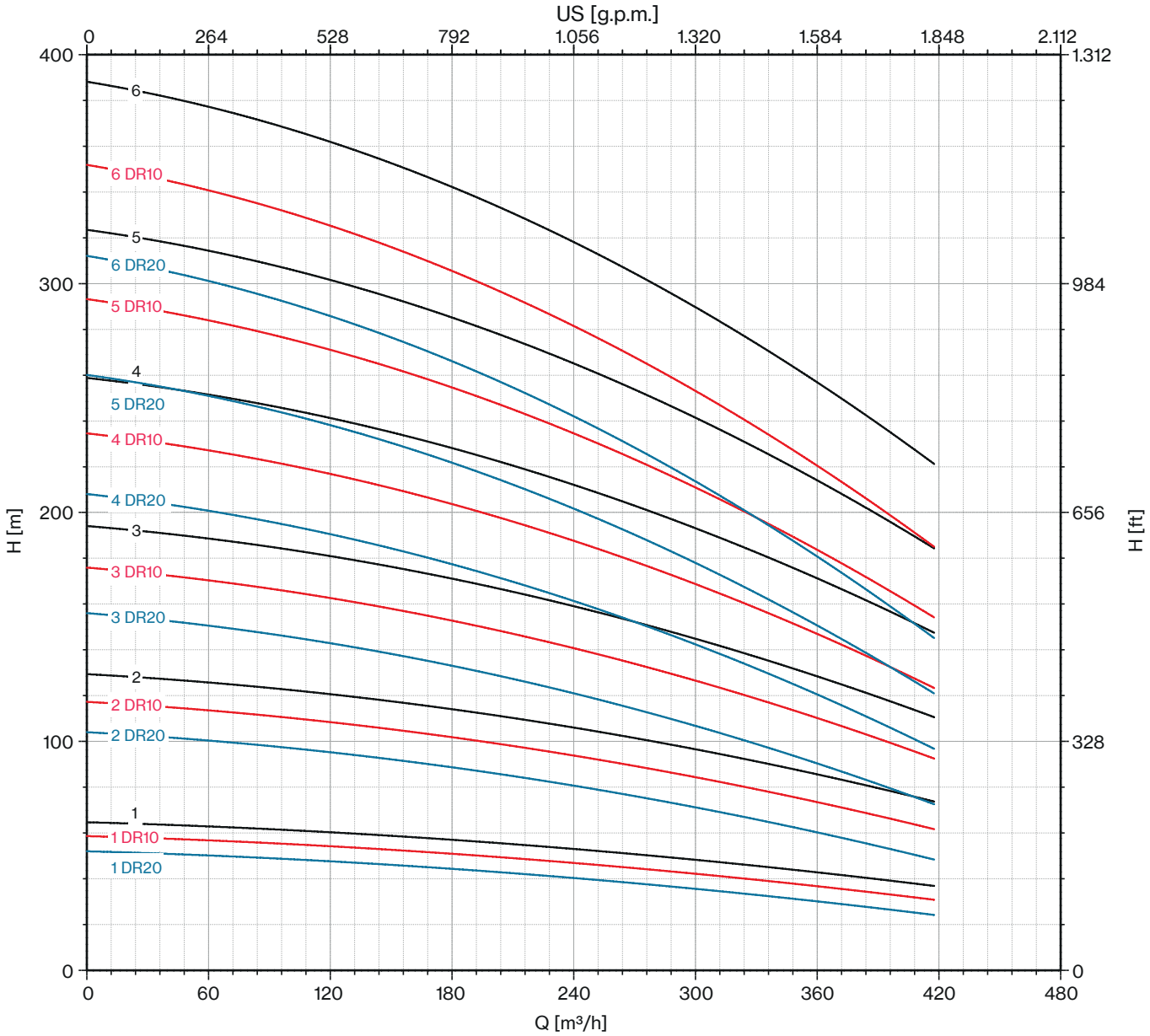
US [g.p.m.]
0
264
528
792
1.056
1.320
1.584
1.848
2.112
400
300
200
100
0
1.312
984
656
328
0
H [m]
H [ft]
6
6 DR10
5
6 DR20
5 DR10
4
5 DR20
4 DR10
4 DR20
3
3 DR10
3 DR20
2
2 DR10
2 DR20
1
1 DR10
1 DR20
0
60
120
180
240
300
360
420
480
Q [m³/h]

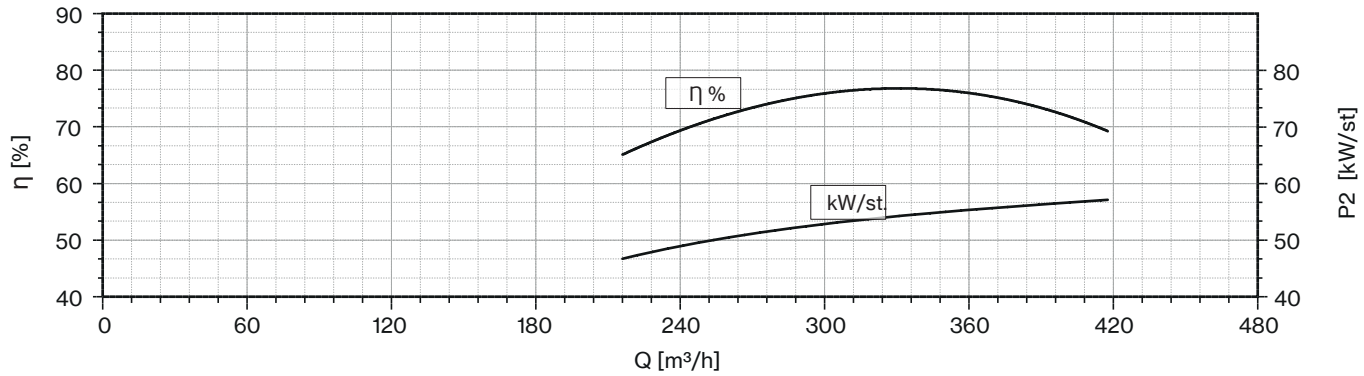
90
80
70
60
50
40
η [%]
P2 [kW/st]
η %
kW/st.
0
60
120
180
240
300
360
420
480
Q [m³/h]

12LM 360

60 Hz - 3500 rpm				Q									
TYPE	P2		l/min	0	3600	4200	4800	5400	6000	6600	7200	7800	8400
			l/sec	0	60	70	80	90	100	110	120	130	140
	HP	kW	m³/h	0	216	252	288	324	360	396	432	468	504
12LM 360/01DR35	90	66	H (m)	59	55	53	53	50	48	46	41		
12LM 360/01DR26	100	75		66	64	63	62	60	56	54	52	49	
12LM 360/01DR20	125	92		71	69	68	67	65	63	60	58	54	49
12LM 360/01DR10D	150	110		79	75	74	73	71	69	67	63	60	58
12LM 360/01D	150	110		89	81	79	79	76	75	74	72	67	60
12LM 360/02DR35D	175	130		118	109	107	105	101	95	91	82		
12LM 360/02DR26D	225	165		132	128	127	124	121	112	108	104	98	
12LM 360/02DR20D	250	185		141	137	135	134	130	126	121	115	108	98
12LM 360/02DR10D	300	220		158	150	149	146	143	138	134	127	121	115
12LM 360/02D	300	220		179	161	158	157	153	150	149	144	134	121

Max Eff. % =	81
Max Eff. % DR10 =	80,5
Max Eff. % DR20 =	80
Max Eff. % DR26 =	78,5
Max Eff. % DR35 =	77,5
Max kW / St. Nom. =	111,1
Max kW / St. DR10 =	95,5
Max kW / St. DR20 =	85,6
Max kW / St. DR26 =	76,3
Max kW / St. DR35 =	63,7

NPSH (m)	Q=25%	Q=50%	Q=75%	Q=100%
	3,4	5	7,8	11,8

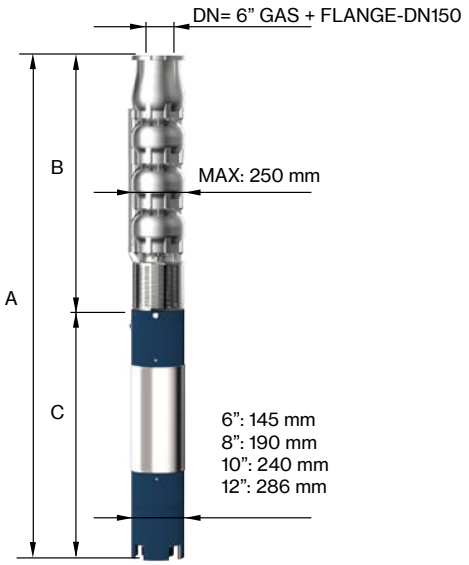

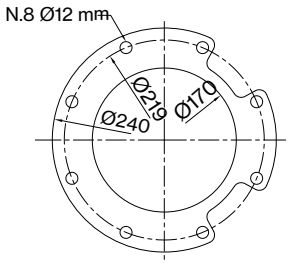

FOR COMMERCIAL TUBE
EXTERNAL DIAMETER: 168,3 mm

TYPE	MOTOR BRACKET	DIMENSIONS (mm)			WEIGHT (kg)	
		A	B	C	M	P
12LM 360/01DR35-8	8" NEMA	2073	770	1303	214	79
12LM 360/01DR26-8		2153	770	1383	230	79
12LM 360/01DR20-8		2353	770	1583	270	79
12LM 360/01DR10D-8		2503	770	1733	300	79
12LM 360/01D-8		2503	770	1733	300	79
12LM 360/02DR35D-10	10"	2634	1000	1634	385	104
12LM 360/02DR26D-10		2854	1000	1854	444	104
12LM 360/02DR20D-10		2984	1000	1984	480	104
12LM 360/02DR10D	12"	3110	1000	2110	700	104
12LM 360/02D		3110	1000	2110	700	104

"DR" : reduced-diameter impellers
"D" Pump shaft in Duplex EN 1.4462

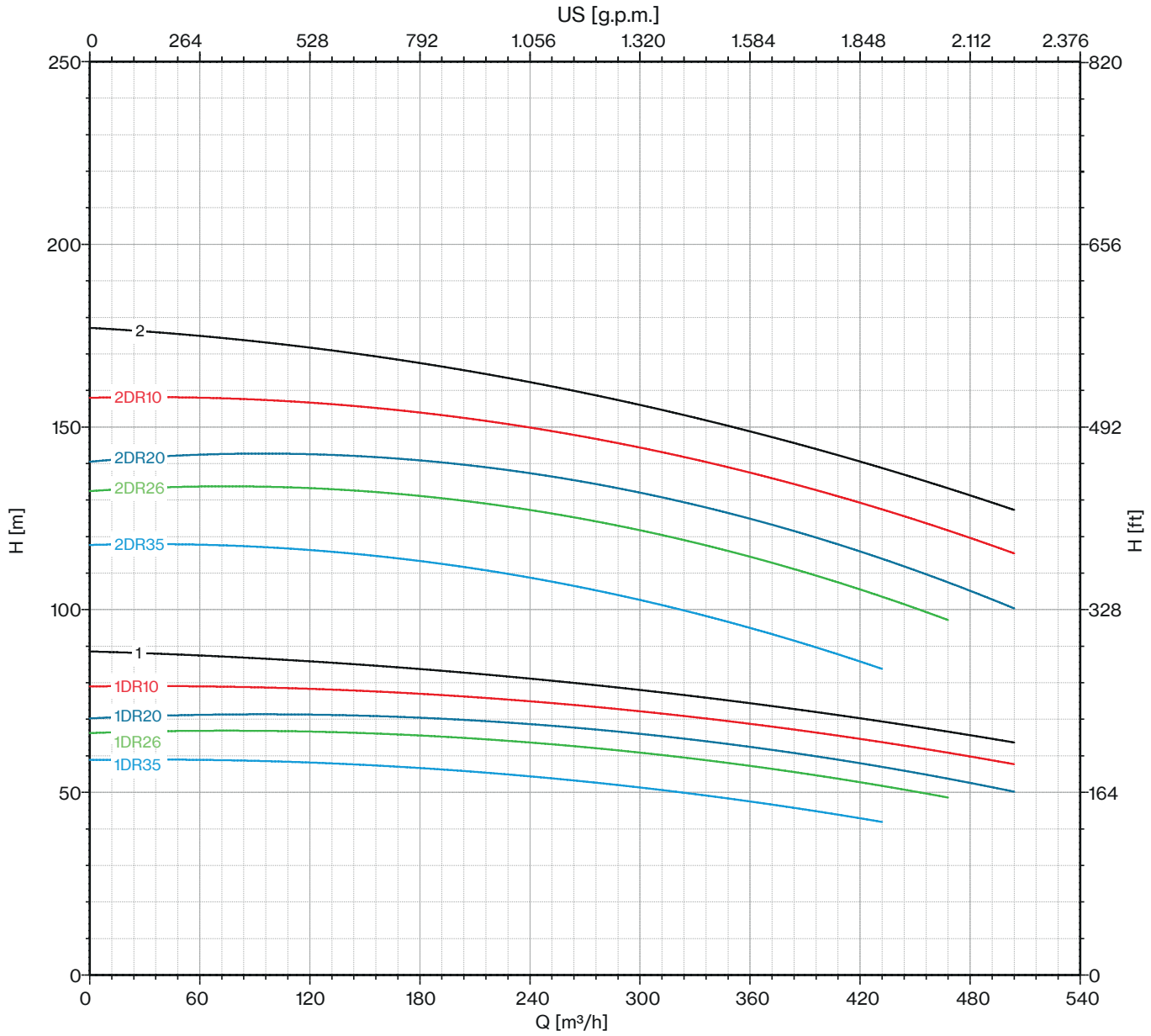
US [g.p.m.]
0
264
528
792
1.056
1.320
1.584
1.848
2.112
2.376
250
200
150
100
50
0
820
656
492
328
164
0
H [m]
H [ft]
2
2DR10
2DR20
2DR26
2DR35
1
1DR10
1DR20
1DR26
1DR35
0
60
120
180
240
300
360
420
480
540
Q [m³/h]

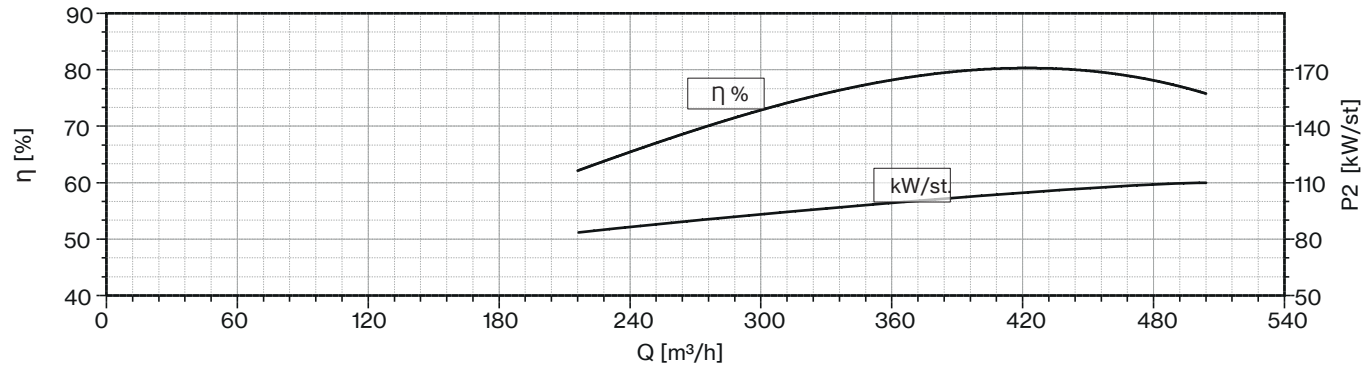
90
80
70
60
50
40
η [%]
η %
kW/st
170
140
110
80
50
P2 [kW/st]
0
60
120
180
240
300
360
420
480
540
Q [m³/h]

12LM 360

60 Hz - 3500 rpm				Q									
TYPE	P2		l/min	0	3600	4200	4800	5400	6000	6600	7200	7800	8400
			l/sec	0	60	70	80	90	100	110	120	130	140
	HP	kW	m³/h	0	216	252	288	324	360	396	432	468	504
12LM 360/03DR35D	300	220	H (m)	177	164	160	158	151	143	137	124		
12LM 360/03DR26D	340	250		199	193	190	186	181	168	162	156	147	
12LM 360/03DR20D	400	300		212	206	203	201	194	188	181	173	162	147
12LM 360/03DR10D	400	300		238	225	223	219	214	207	201	190	181	173
12LM 360/03D	500	370		268	242	238	236	229	225	223	216	201	181
12LM 360/04DR35D	400	300		236	219	213	211	202	190	182	165		
12LM 360/04DR26D	500	370		265	257	253	248	242	225	217	207	196	
12LM 360/04DR20D	500	370		282	274	271	268	259	251	242	230	217	196
12LM 360/04DR10D	550	400		317	300	297	291	286	276	268	253	242	230

Max Eff. % =	81
Max Eff. % DR10 =	80,5
Max Eff. % DR20 =	80
Max Eff. % DR26 =	78,5
Max Eff. % DR35 =	77,5
Max kW / St. Nom. =	111,1
Max kW / St. DR10 =	95,5
Max kW / St. DR20 =	85,6
Max kW / St. DR26 =	76,3
Max kW / St. DR35 =	63,7

NPSH (m)	Q=25%	Q=50%	Q=75%	Q=100%
	3,4	5	7,8	11,8

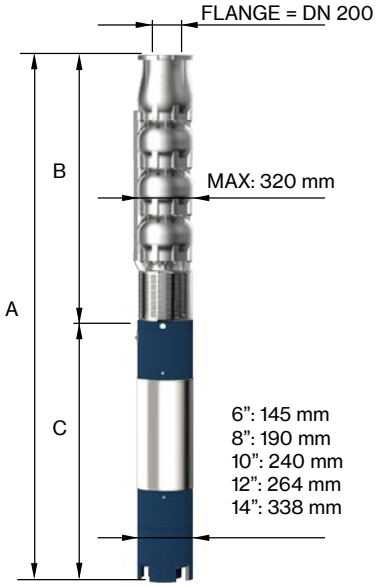

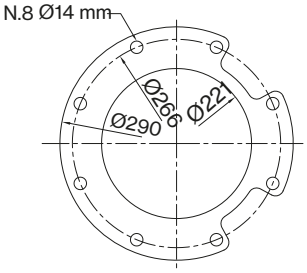

FOR COMMERCIAL TUBE
EXTERNAL DIAMETER: 219,1 mm

TYPE	MOTOR BRACKET	DIMENSIONS (mm)			WEIGHT (kg)	
		A	B	C	MOTOR	PUMP
12LM 360/03DR35D	12"	3340	1230	2110	700	129
12LM 360/03DR26D		3510	1230	2280	775	129
12LM 360/03DR20D-14	14"	3510	1230	2280	775	129
12LM 360/03DR10D-14		3510	1230	2280	775	129
12LM 360/03D-14		3550	1230	2320	1010	129
12LM 360/04DR35D-14		3740	1460	2280	775	154
12LM 360/04DR26D-14		3780	1460	2320	1010	154
12LM 360/04DR20D-14		3780	1460	2320	1010	154
12LM 360/04DR10D-14		3920	1460	2460	1105	154

"DR" : reduced-diameter impellers
"D" Pump shaft in Duplex EN 1.4462

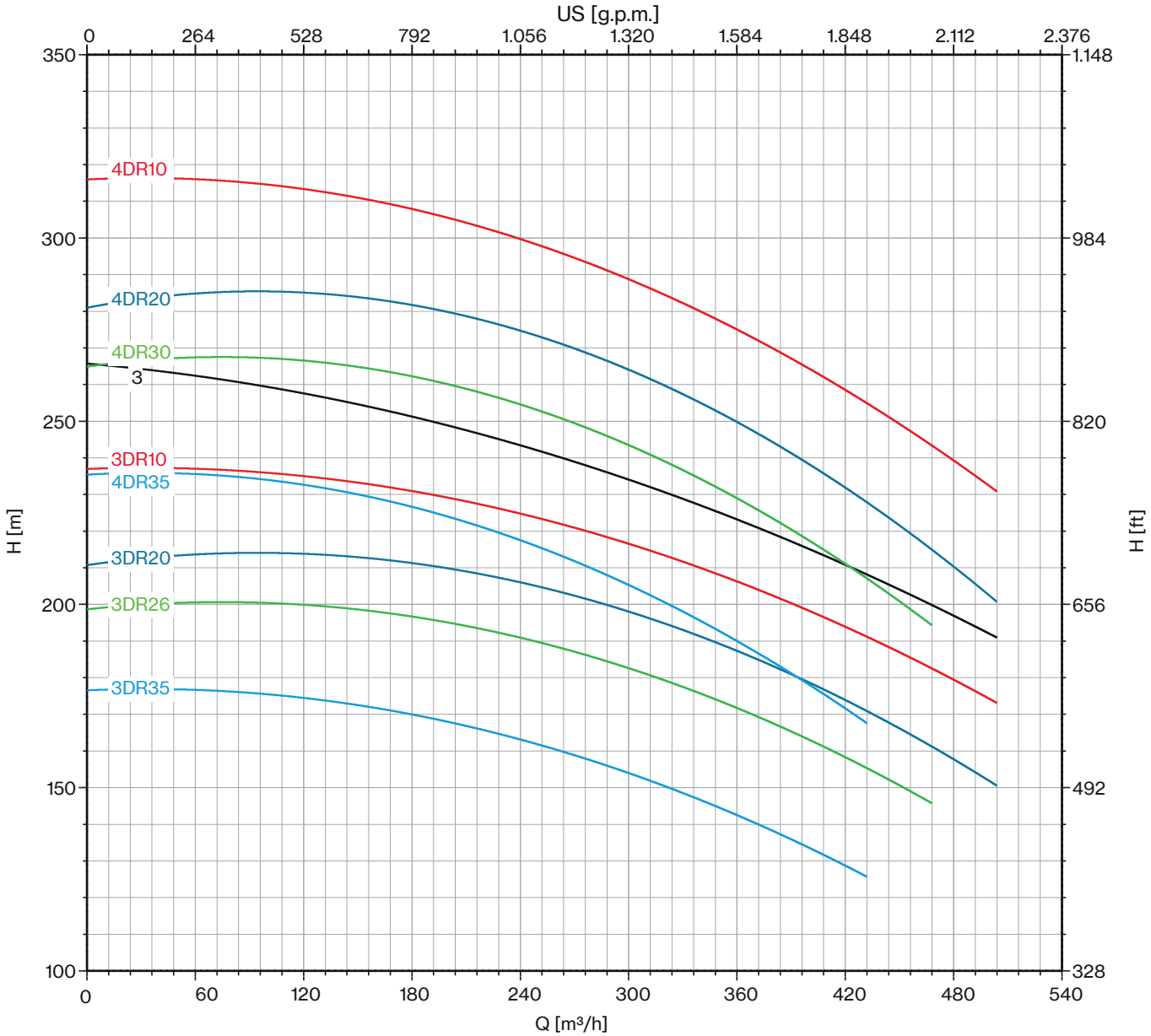

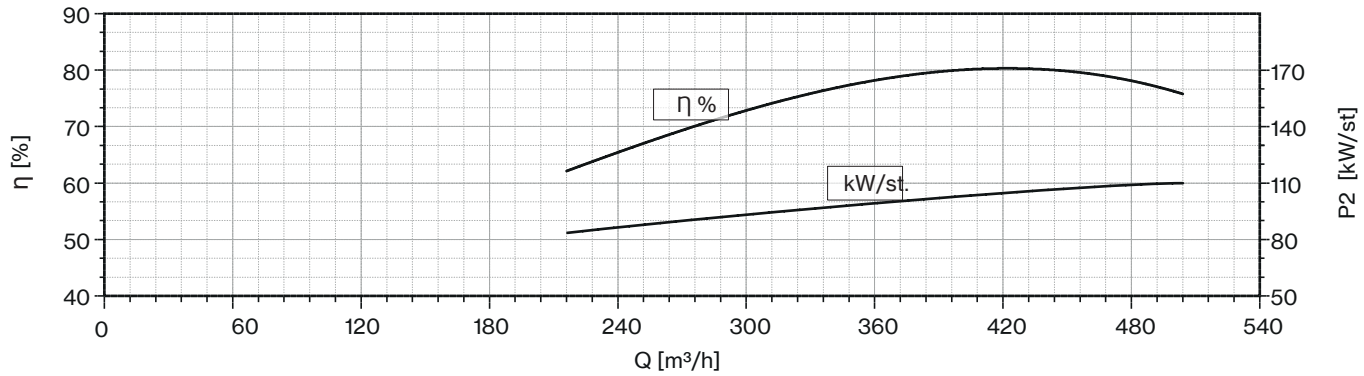

Drinking water compatibility according DM 174
MEI ≥ 0,4 (regulation EU N. 547/2012)
Models with less than 3 stages reduce the % eff. of 5%
Hydraulic performance according to ISO 9906 grade 3B

12LM 400

60 Hz - 3500 rpm				Q											
TYPE	P2		l/min	0	4800	5400	6000	6600	7200	7800	8400	9000	9600	10200	10800
			l/sec	0	80	90	100	110	120	130	140	150	160	170	180
	HP	kW	m^3/h	0	287,9	323,9	359,9	395,9	431,9	467,9	503,9	539,9	575,9	611,9	647,9
12LM 400/01DR30	90	66	H (m)	62	56	54	52	49	46	43	39	35			
12LM 400/01DR20	125	92		68	63	62	59	56	53	50	47	43	37	32	
12LM 400/01DR10	125	92		76	72	69	66	63	60	58	55	51	46	40	
12LM 400/01D	150	110		84	78	75	72	69	66	63	60	58	53	45	39
12LM 400/01AD	175	130		88	82	78	76	75	72	69	66	64	59	56	46
12LM 400/02DR30D	175	130		124	112	108	104	98	92	85	78	69			
12LM 400/02DR20D	225	165		135	127	124	118	111	105	100	94	85	75	63	
12LM 400/02DR10D	250	185		153	144	138	132	127	121	115	109	103	92	81	
12LM 400/02D	300	220		167	156	150	144	138	132	127	121	115	105	89	78
12LM 400/02AD	340	250		176	164	156	153	150	144	138	132	128	118	112	92

Max Eff. % A =	82,5
Max Eff. % =	81,6
Max Eff. % DR10 =	82,7
Max Eff. % DR20 =	81,8
Max Eff. % DR30 =	81,2
Max kW / St. A =	115,9
Max kW / St. Nom. =	104,5
Max kW / St. DR10 =	91,7
Max kW / St. DR20 =	78,9
Max kW / St. DR30 =	64

NPSH (m)	Q=25%	Q=50%	Q=75%	Q=100%
	3,4	5	7,8	11,8

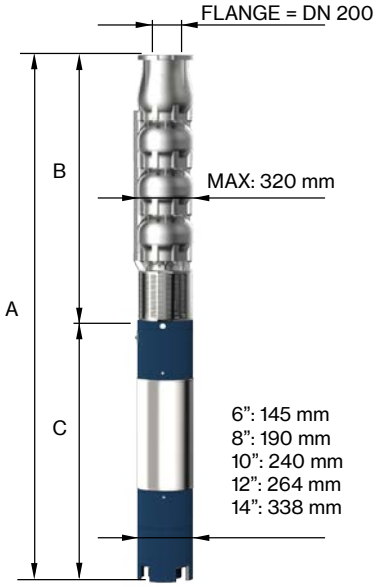

TYPE	MOTOR BRACKET	DIMENSIONS (mm)			WEIGHT (kg)	
		A	B	C	MOTOR	PUMP
12LM 400/01DR30-8	8" NEMA	2073	770	1303	214	79
12LM 400/01DR20-8		2353	770	1583	270	79
12LM 400/01DR10-8		2353	770	1583	270	79
12LM 400/01D-8		2503	770	1733	300	79
12LM 400/01AD-10	10"	2404	770	1634	385	79
12LM 400/02DR30D-10		2634	1000	1634	385	104
12LM 400/02DR20D-10		2854	1000	1854	444	104
12LM 400/02DR10D-10		2984	1000	1984	480	104
12LM 400/02D	12"	3110	1000	2110	700	104
12LM 400/02AD		3280	1000	2280	775	104

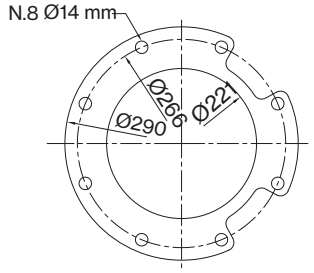

FOR COMMERCIAL TUBE
EXTERNAL DIAMETER: 219,1 mm

"DR" : reduced-diameter impellers
"D" Pump shaft in Duplex EN 1.4462

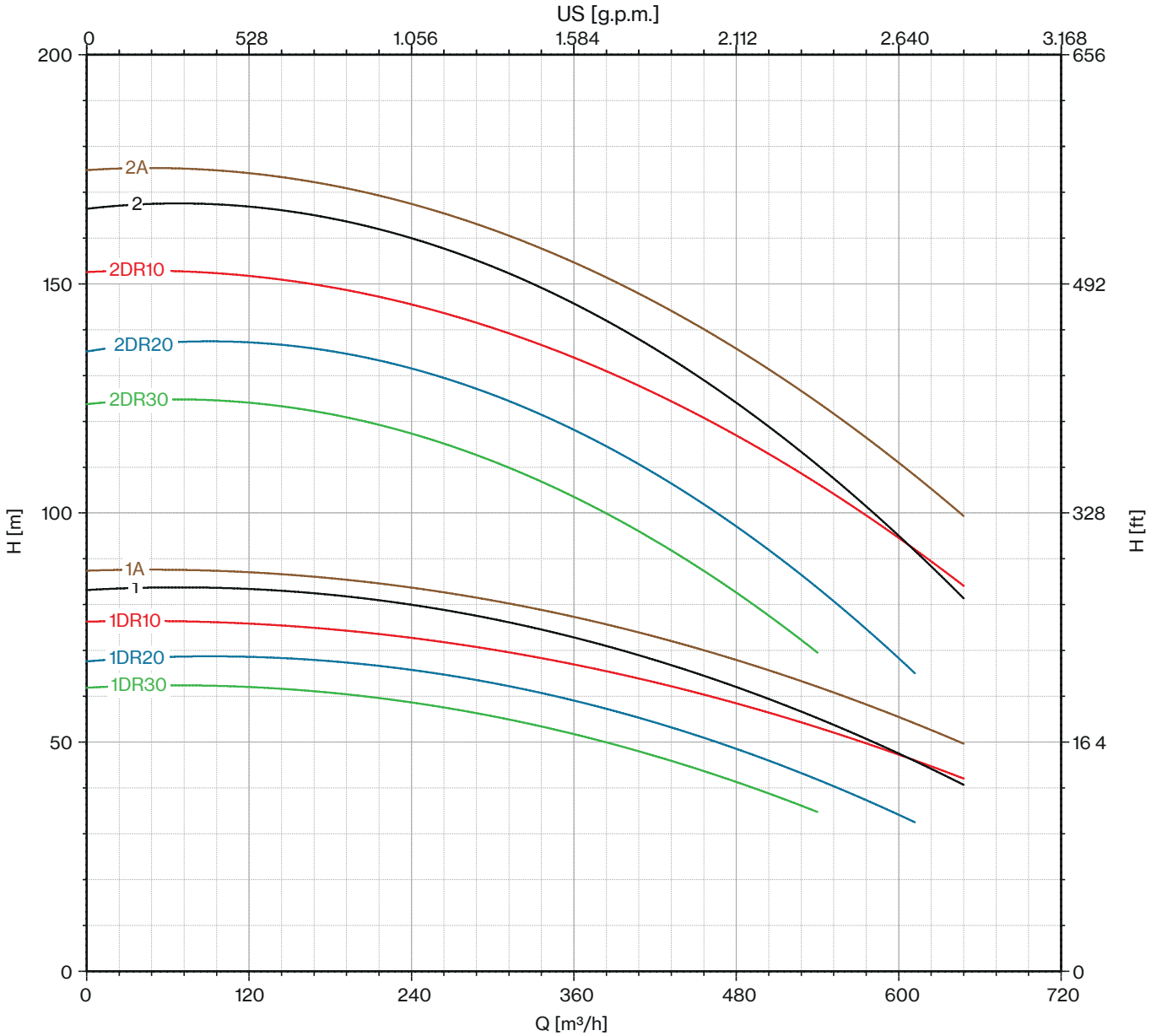
US [g.p.m.]
0
528
1.056
1.584
2.112
2.640
3.168
200
150
100
50
0
656
492
328
16 4
0
H [m]
H [ft]
2A
2
2DR10
2DR20
2DR30
1A
1
1DR10
1DR20
1DR30
0
120
240
360
480
600
720
Q [m³/h]

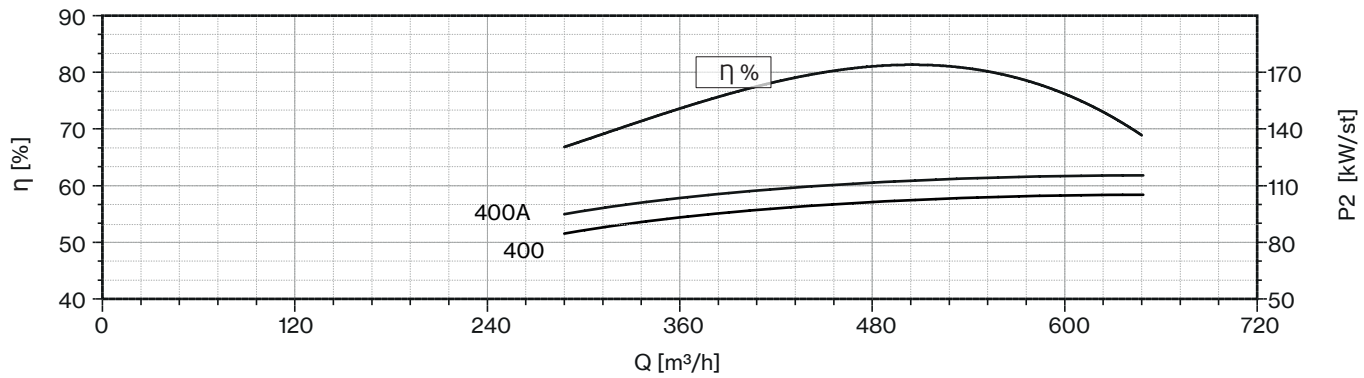
90
80
70
60
50
40
η [%]
η %
400A
400
170
140
110
80
50
P2 [kW/st]
0
120
240
360
480
600
720
Q [m³/h]

12LM 400

60 Hz - 3500 rpm				Q											
TYPE	P2		l/min	0	4800	5400	6000	6600	7200	7800	8400	9000	9600	10200	10800
			l/sec	0	80	90	100	110	120	130	140	150	160	170	180
	HP	kW	m^3/h	0	288	324	360	396	432	468	504	540	576	612	648
12LM 400/03DR30D	300	220	H (m)	186	168	162	156	147	138	128	117	104			
12LM 400/03DR20D	340	250		203	190	186	177	167	158	149	141	128	112	95	
12LM 400/03DR10D	400	300		229	216	207	199	190	181	173	164	154	138	121	
12LM 400/03D	450	330		251	233	225	216	207	199	190	181	173	158	134	117
12LM 400/03AD	500	370		264	246	233	229	225	216	207	199	193	177	168	138
12LM 400/04DR30D	400	300		248	225	217	207	196	184	170	156	138			
12LM 400/04DR20D	450	330		271	253	248	236	222	211	199	188	170	150	127	
12LM 400/04DR10D	500	370		305	288	276	265	253	242	230	219	205	184	161	

Max Eff. % A =	82,5
Max Eff. % =	81,6
Max Eff. % DR10 =	82,7
Max Eff. % DR20 =	81,8
Max Eff. % DR30 =	81,2
Max kW / St. A =	115,9
Max kW / St. Nom. =	104,5
Max kW / St. DR10 =	91,7
Max kW / St. DR20 =	78,9
Max kW / St. DR30 =	64

NPSH (m)	Q=25%	Q=50%	Q=75%	Q=100%
	3,4	5	7,8	11,8

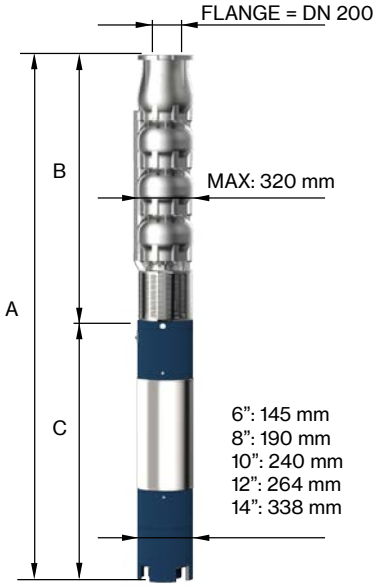

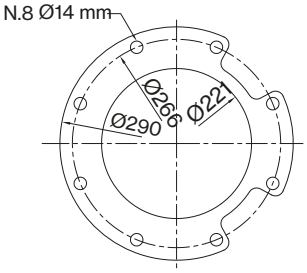

FOR COMMERCIAL TUBE
EXTERNAL DIAMETER: 219,1 mm

TYPE	MOTOR BRACKET	DIMENSIONS (mm)			WEIGHT (kg)	
		A	B	C	MOTOR	PUMP
12LM 400/03DR30D	12"	3340	1230	2110	700	129
12LM 400/03DR20D		3510	1230	2280	775	129
12LM 400/03DR10D-14	14"	3510	1230	2280	775	129
12LM 400/03D-14		3390	1230	2160	906	129
12LM 400/03AD-14		3550	1230	2320	1010	129
12LM 400/04DR30D-14		3740	1460	2280	775	154
12LM 400/DR20D-14		3620	1460	2160	906	154
12LM 400/04DR10D-14		3780	1460	2320	1010	154

"DR" : reduced-diameter impellers
"D" Pump shaft in Duplex EN 1.4462

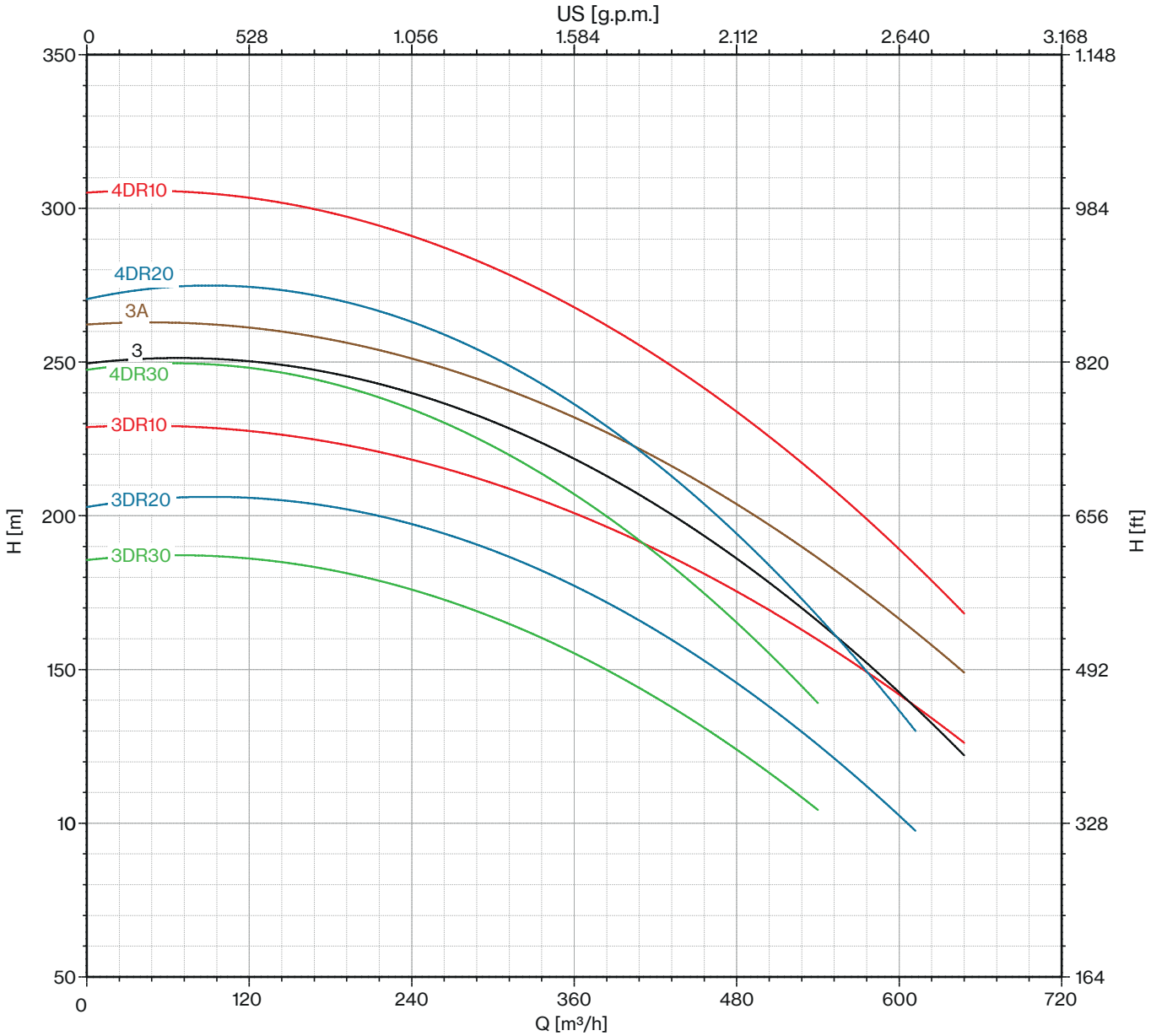

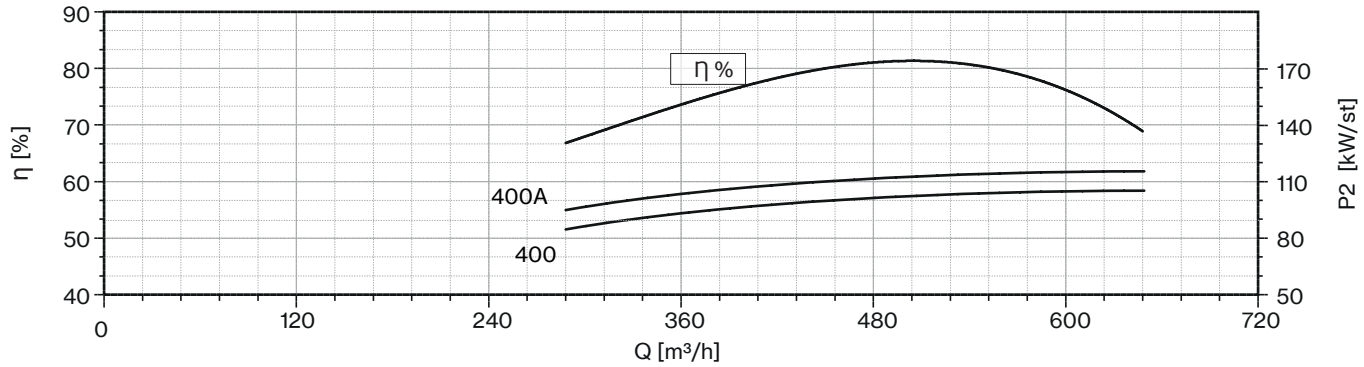

Drinking water compatibility according DM 174
MEI ≥ 0,4 (regulation EU N. 547/2012)
Models with less than 3 stages reduce the % eff. of 5%
Hydraulic performance according to ISO 9906 grade 3B

E14 A

60 Hz - 3500 rpm					Q								
TYPE	P2		400 V	l/min	0	1600	3200	4800	6400	8000	9600	10200	11600
				l/sec	0	27	53	80	107	133	160	170	193
	HP	kW	A	m³/h	0	96	192	288	384	480	576	612	696
E14 A/1D	175	130	245,3	H (m)	103,3	95,8	90,0	84,5	78,3	70,6	59,9	55,0	
E14 A/1C	175	130	245,3		110,6	103,2	97,2	91,9	85,8	78,6	69,0	64,8	56,2
E14 A/1B	225	165	313,3		122,5	115,1	108,9	103,4	97,6	91,1	83,1	79,3	69,4
E14 A/1A	300	220	424,0		139,9	130,8	123,1	115,8	108,9	101,8	94,2	90,7	82,9
E14 A/1	300	220	424,0		156,4	143,0	132,9	125,3	118,8	112,3	105,1	102,0	92,3
E14 A/2D	340	250	481,0		206,6	191,5	180,0	169,1	156,7	141,1	119,8	110,0	
E14 A/2C	400	300	575,0		221,2	206,5	194,4	183,7	171,5	157,1	138,0	129,6	112,3
E14 A/2B	450	330	620,0		245,0	230,1	217,7	206,8	195,3	182,2	166,2	158,7	138,8
E14 A/2A	550	400	798,0		279,7	261,5	246,2	231,6	217,7	203,6	188,4	181,4	165,9

Max Eff. % =	82,3
Max KW / St. D (230mm) =	112,3
Max KW / St. C (238mm) =	128,0
Max KW / St. B (251mm) =	157,1
Max KW / St. A (268mm) =	188,7
Max KW / St. Nom. (276mm) =	206,3

NPSH (m)	Q=25%	Q=50%	Q=75%	Q=100%
	5,8	6,4	9,4	15,3

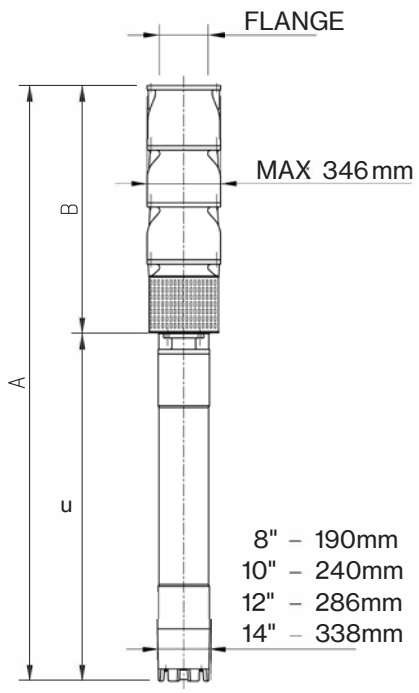

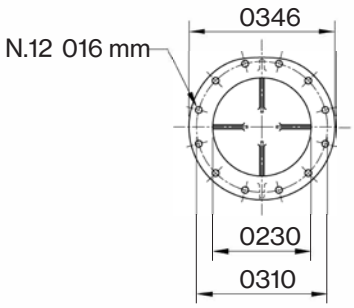

TYPE	MOTOR BRACKET	DIMENSIONS (mm)			WEIGHT (kg)	
		A	B	C	MOTOR	PUMP
E14 A/1D-10	10"	2569	935	1634	385	184
E14 A/1C-10		2569	935	1634	385	184
E14 A/1B-10		2789	935	1854	444	184
E14 A/1A-12	12"	3045	935	2110	700	184
E14 A/1-12		3045	935	2110	700	184
E14 A/2D-12		3455	1175	2280	775	260
E14 A/2C	14"	3455	1175	2280	775	260
E14 A/2B		3335	1175	2160	906	260
E14 A/2A		3635	1175	2460	1105	260

"D" Pump shaft in Duplex EN 1.4462

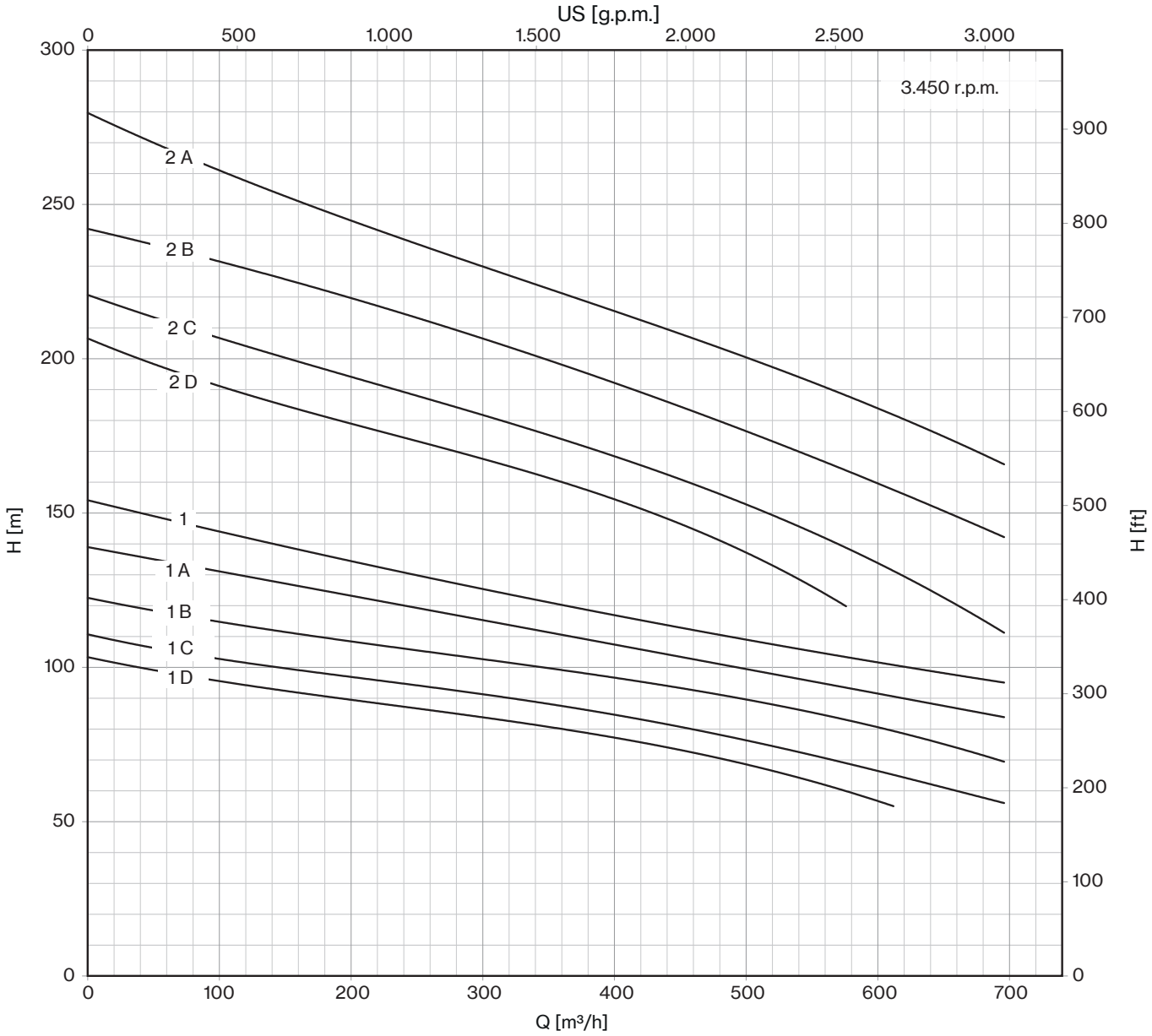
US [g.p.m.]
0
500
1.000
1.500
2.000
2.500
3.000
3.450 r.p.m.
2 A
2 B
2 C
2 D
1
1 A
1 B
1 C
1 D
H [m]
H [ft]
Q [m³/h]

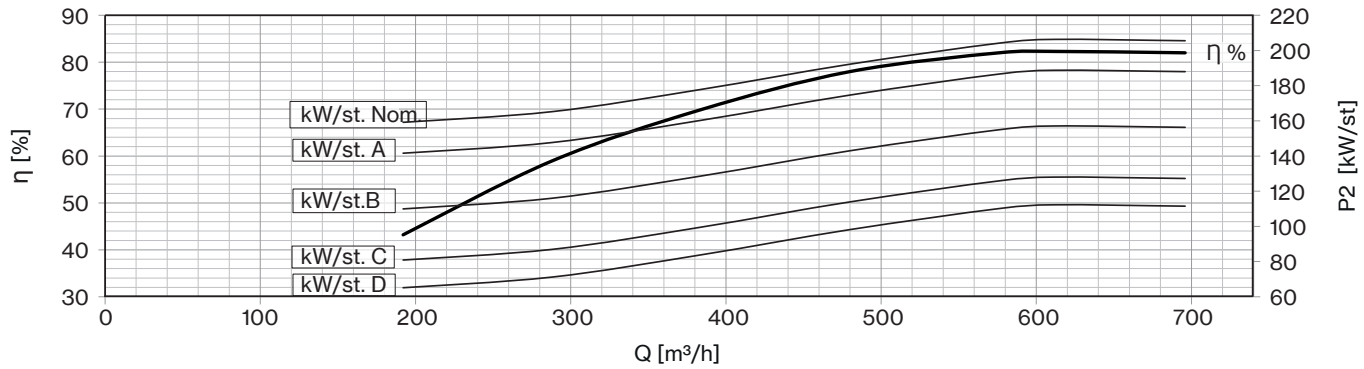
η %
kW/st. Nom
kW/st. A
kW/st.B
kW/st. C
kW/st. D
η [%]
P2 [kW/st]
Q [m³/h]

E14 B

60 Hz - 3500 rpm					Q								
TYPE	P2		400 V	l/min	0	1600	4800	6400	8000	10800	12000	15000	17200
				l/sec	0	26,7	80	106,7	133,3	180	200	250	286,7
	HP	kW	A	m³/h	0	96	288	384	480	648	720	900	1032
E14 B/1C	225	165	313,3	H (m)	105,8	104,4	97,9	91,4	83,2	63,4	52,6	20,2	
E14 B/1B	300	220	424,0		115,7	114,5	108,0	103,0	95,0	77,0	67,2	38,2	
E14 B/1A	340	250	481,0		125,3	121,0	113,8	110,9	106,3	95,0	88,6	65,5	41,8
E14 B/1	400	300	575,0		145,2	140,3	130,2	125,1	119,4	106,8	99,4	77,6	55,3
E14 B/2C	450	330	620,0		211,7	208,8	195,8	182,9	166,5	126,7	105,1	40,3	
E14 B/2B	550	400	798,0		231,5	229,0	216,0	205,9	190,1	154,1	134,5	76,3	

Max Eff. % =	78,6
Max KW / St. C (240mm) =	158,8
Max KW / St. B (250mm) =	189,8
Max KW / St. A (259mm) =	224,2
Max KW / St. Nom. (274mm) =	258,8

NPSH (m)	Q=25%	Q=50%	Q=75%	Q=100%
	6	6,4	8,6	16,3

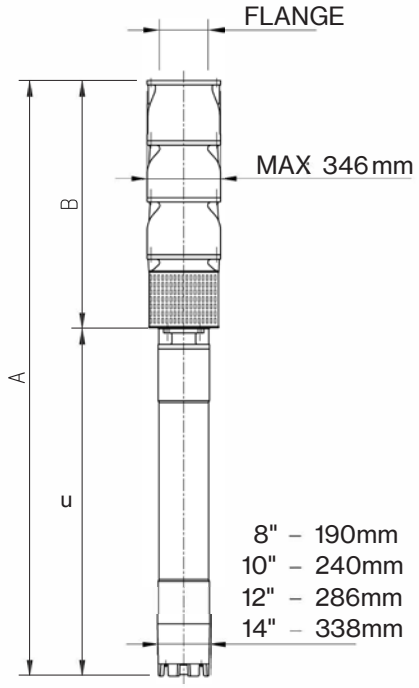

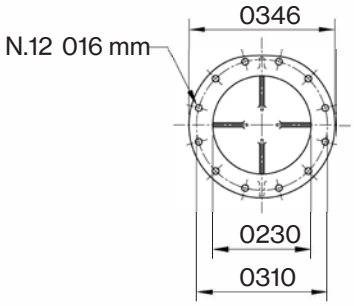

TYPE	MOTOR BRACKET	DIMENSIONS (mm)			WEIGHT (kg)	
		A	B	C	MOTOR	PUMP
E14 B/1C-10	10"	2759	905	1854	444	184
E14 B/1B-12	12"	3015	905	2110	700	184
E14 B/1A-12		3185	905	2280	775	184
E14 B/1	14"	3185	905	2280	775	184
E14 B/2C		3335	1175	2160	906	260
E14 B/2B		3635	1175	2460	1105	260

"D" Pump shaft in Duplex EN 1.4462

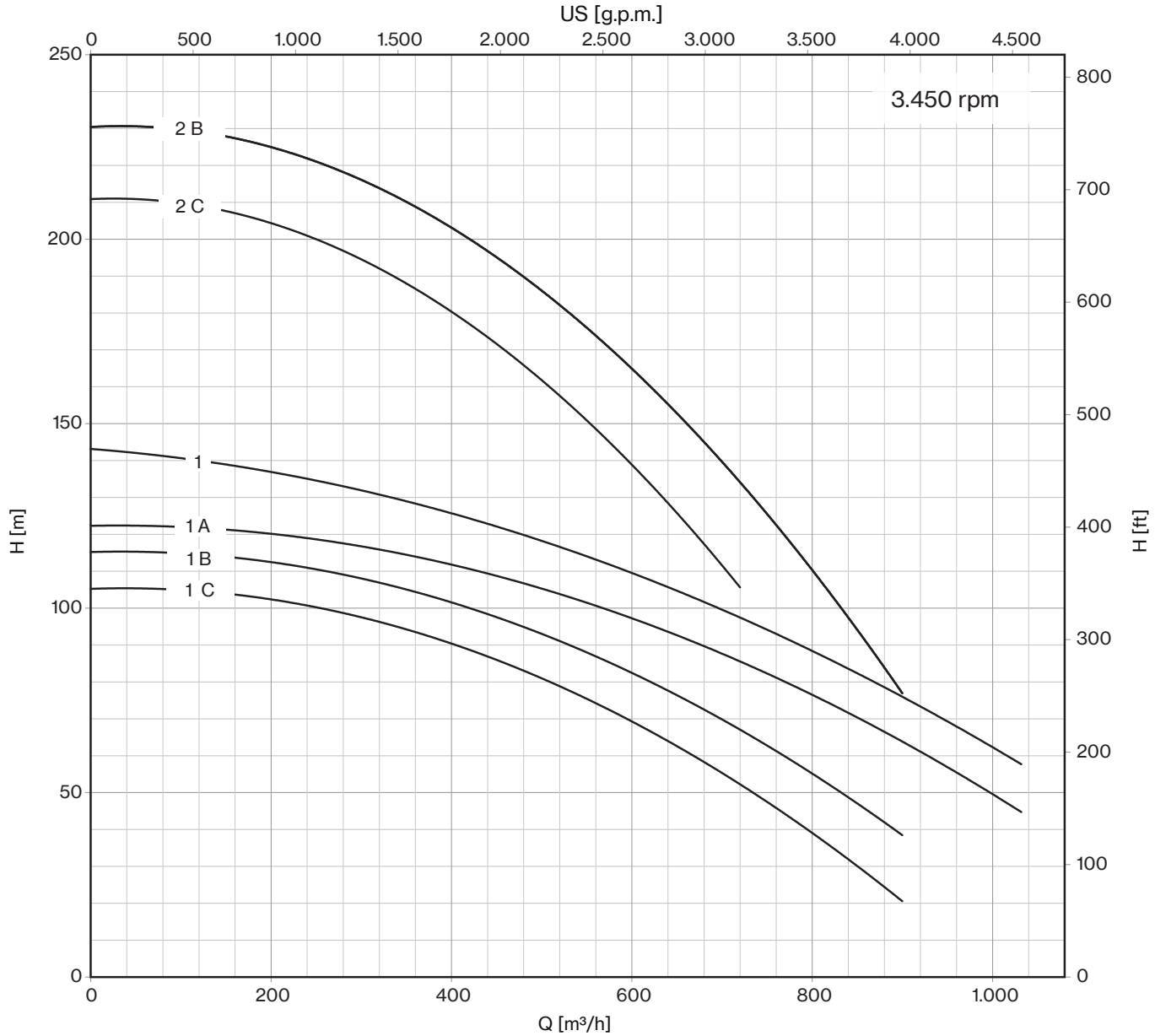
US [g.p.m.]
0
500
1.000
1.500
2.000
2.500
3.000
3.500
4.000
4.500
3.450 rpm
2 B
2 C
1
1 A
1 B
1 C
H [m]
250
200
150
100
50
0
H [ft]
800
700
600
500
400
300
200
100
0
0
200
400
600
800
1.000
Q [m³/h]

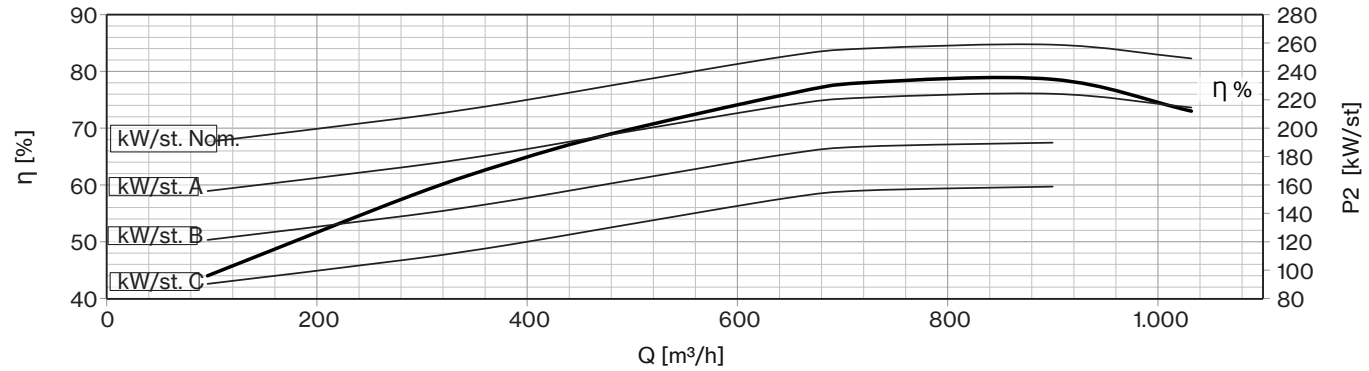
η [%]
90
80
70
60
50
40
kW/st. Nom.
kW/st. A
kW/st. B
kW/st. C
η %
P2 [kW/st]
280
260
240
220
200
180
160
140
120
100
80
0
200
400
600
800
1.000
Q [m³/h]

10LM-12LM

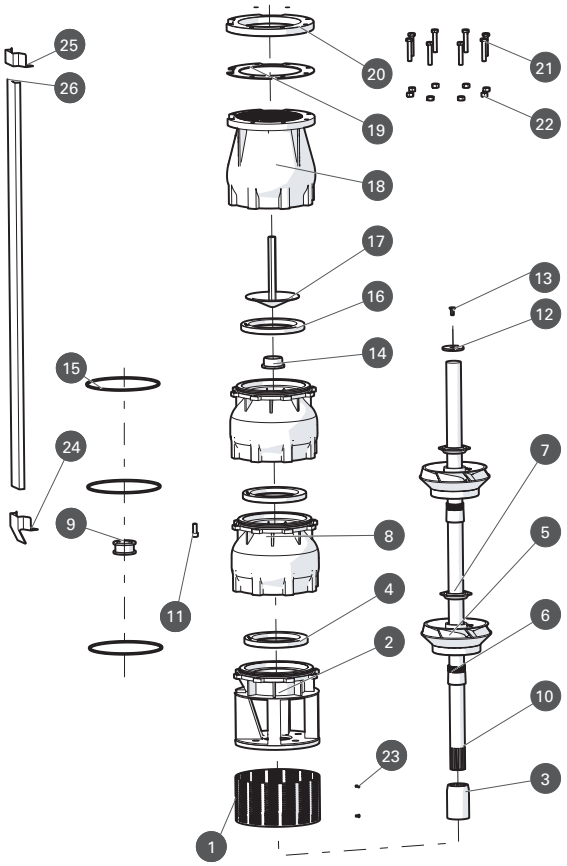

N. CODE	DESCRIPTION	LMS EXECUTION	LMX EXECUTION	LMD EXECUTION	(*) Q.TY
1	**SUCTION STRAINER**	AISI 304	AISI 316	Duplex EN 1.4462	-
2	**MOTOR BRACKET**	AISI 304	AISI 316	Duplex EN 1.4462	-
3	**COUPLING**	AISI 304	AISI 316	Duplex EN 1.4462	1
4	**WEAR RING**	NBR	NBR	NBR	N° of Stages
5	**IMPELLER**	AISI 304	AISI 316	Duplex EN 1.4462	-
6	**CONE**	AISI 304	AISI 316	Duplex EN 1.4462	N° of Stages
7	**HEXAGONAL RING**	AISI 304	AISI 316	Duplex EN 1.4462	N° of Stages
8	**DIFFUSER**	AISI 304	AISI 316	Duplex EN 1.4462	-
9	**BEARING BUSH**	NBR	NBR	NBR	N° of Stages
10	**PUMP SHAFT**	AISI 304	AISI 316	Duplex EN 1.4462	1
11	**N.8 SCREW FOR DIFFUSEUR**	AISI 304	AISI 316	Duplex EN 1.4462	-
12	**RING**	AISI 304	AISI 316	Duplex EN 1.4462	1
13	**SCREW FOR DISK**	AISI 304	AISI 316	Duplex EN 1.4462	1
14	**COUNTERTHRUST**	PTFE + 25% CARBON	PTFE + 25% CARBON	PTFE + 25% CARBON	1
15	**O-RING**	NBR	NBR	NBR	N° of Stages
16	**GASKET VALVE**	NBR	NBR	NBR	1
17	**CAP VALVE**	AISI 304	AISI 316	Duplex EN 1.4462	-
18	**BODY VALVE**	AISI 304	AISI 316	Duplex EN 1.4462	-
19	**SEAL COUNTERFLANGE**	NBR	NBR	NBR	1
20	**COUNTERFLANGE**	AISI 304	AISI 316	Duplex EN 1.4462	-
21	**N.8 SCREW FOR COUNTERFLANGE**	AISI 304	AISI 316	Duplex EN 1.4462	-
22	**N.8 NUT FOR COUNTERFLANGE**	AISI 304	AISI 316	Duplex EN 1.4462	-
23	**N.2 SCREW FOR SUCTION STRAINER**	AISI 304	AISI 316	Duplex EN 1.4462	-
24	**LOWER CLAMP**	AISI 304	AISI 316	Duplex EN 1.4462	-
25	**UPPER CLAMP**	AISI 304	AISI 316	Duplex EN 1.4462	-
26	**COVER CABLE**	AISI 304	AISI 316	Duplex EN 1.4462	-

** Reccomended spare parts quantity*

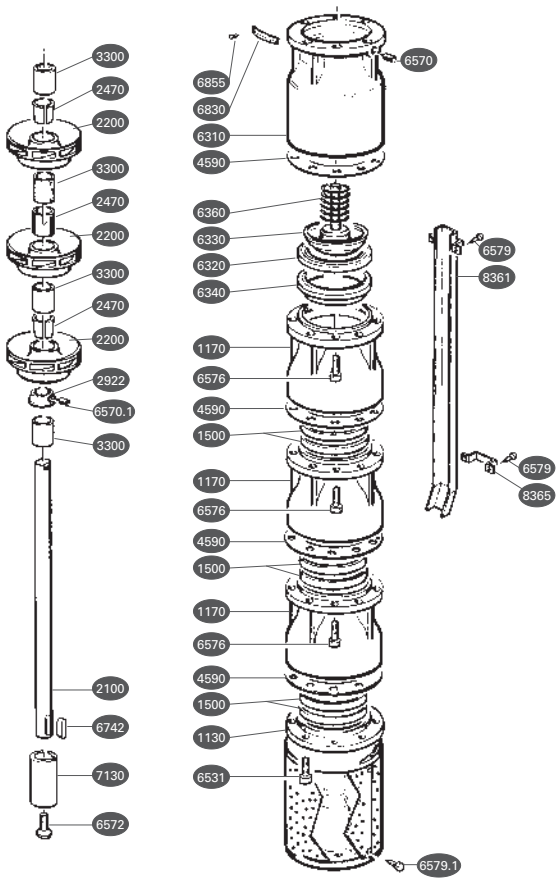

N° CODE	DESCRIPTION	STANDARD MATERIAL	(*) Q.TY
1130	**MOTOR BRACKET**	Cast iron	
1170	**DIFFUSER**	Cast iron	
1500	**WEAR RING**	Rubber	1 × Stage
2100	**SHAFT**	Stainless steel	
2200	**IMPELLER**	Cast iron	1 × Stage
2470	**BUSHING**	Steel	1 × Stage
2922	**SANDGUARD**	Brass	
3300	**BEARING**	Steel - rubber	1 × Stage
4590	**GLAND**	Guarnital	1 × Stage
6310	**VALVE BODY**	Valve body / Cast Iron	
6320	**VALVE HOUSING**	Rubber	
6330	**WASHER**	Stainless steel	
6340	**HOUSING RING**	Cast iron	
6360	**SPRING**	Stainless steel	
6531	**STRAINER**	Stainless steel	
6570	**SCREW**	Stainless steel	
6570.1	**SCREW**	Stainless steel	
6572	**SCREW**	Stainless steel	
6576	**SCREW**	Stainless steel	
6579	**SCREW**	Stainless steel	
6579.1	**SCREW**	Stainless steel	
6742	**KEY**	Stainless steel	
6830	**LABEL**	Stainless steel	
6855	**PIN**	Stainless steel	
7130	**JOINT**	Stainless steel	
8361	**SHEAT**	Stainless steel	
8365	**CABLE GUARD CLAMP**	Stainless steel	

Foras®

WATER PUMPS

SUBMERSIBLE WELL MOTORS

SUBMERSIBLE WELL MOTORS

4MFE/6MFE

6R/8R/10R

PTR12/PTR14

Line of motors for submersible electric pumps, available with different construction technologies and available in sizes 4", 6", 8", 10", 12" and 14".

4MFE/6MFE

Submersible Well Motors

4” and 6” rewindable oil filled submersible motors characterized by high torque, strong mechanical structure, high reliability. Suitable for vertical and horizontal operations.

Construction features	
Upper support	nickel plated cast iron
External jacket, shaft and cup	stainless steel
Mechanical seal	ceramic-graphite
Ball bearings	axial and radial oil lubricated
Number of startups/hr	max 30
Coolant	non-toxic dielectric lubricant
Cable	1,75 to 4 m according to motor size (3 wires + ground)
Shaft extension and coupling	NEMA standard
Voltage	1~ 110V, 220V 3~ 220V, 380V, 460V
Insulation class	F
Protection degree	IPX8
Max liquid temperature	35° C
Max depth immersion	150 m

4MFE

6MFE

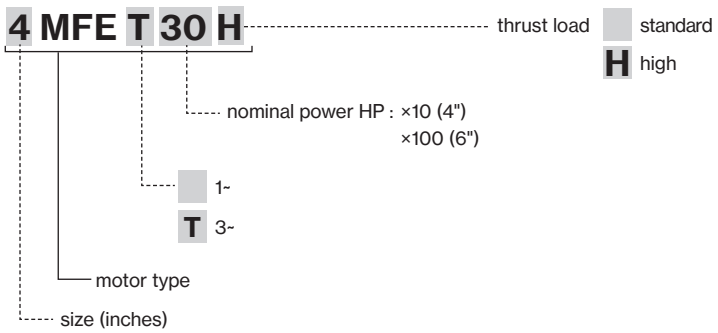

4MFE/6MFE

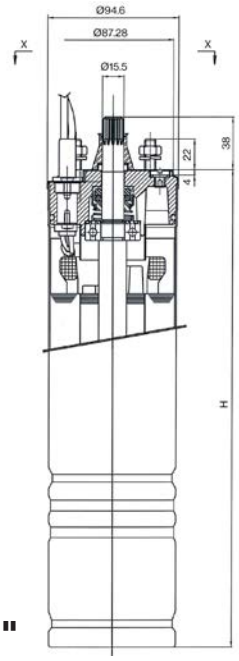

4 "

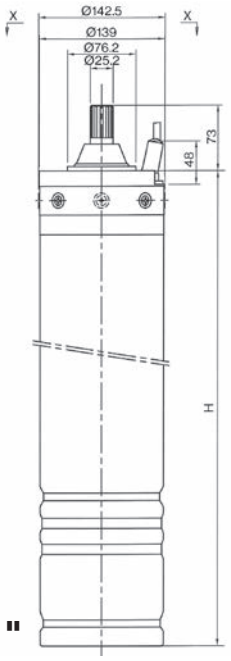

6 "

TYPE 1~ 220V	Power		Axial load	I_N	I_{START}	I_{MAX}	Eff.	Cos Φ	H	Kg	Cr	Cs	S.F.	CABLE	
														Lenght	Size
	HP	kW	N	A			%		mm		µF			m	mm²
4MFE 5	0,5	0,37	1500	3,4	13,5	4,2	53	0,94	325	7	20	-	1,6	1,75	1,5
4MFE 7	0,75	0,55		4,8	18	6,6	52	0,96	325	7,6	25	-	1,5		
4MFE10	1	0,75		6,4	24	7,9	56	0,91	350	8,7	35	-	1,4		
4MFE15	1,5	1,1		7,9	33	11,2	65	0,94	385	10,3	40	-	1,3		
4MFE20	2	1,5		10,1	34	12,2	66	0,97	420	12	50	-	1,25		
4MFE30	3	2,2		16,1	49	17,1	68	0,94	470	14,2	60	-	1,15	2,5	
4MFE30H	3	2,2	7500	16,1	49	17,1	68	0,94	520	15,5	60	-	1,15		

TYPE 1~ 110V	Power		Axial load	I_N	I_{START}	I_{MAX}	Eff.	Cos Φ	H	Kg	Cr	Cs	S.F.	CABLE	
														Lenght	Size
	HP	kW	N	A			%		mm		µF			m	mm²
4MFE 5	0,5	0,37	1500	7,4	26	10,6	50	0,94	325	7	25	72-86	1,6	1,75	1,5
4MFE 7	0,75	0,55		9,4	38	12,9	56	0,91	325	7,6	30	88-106	1,5		
4MFE10	1	0,75		14,0	44	16,6	55	0,94	350	8,7	40	130-156	1,4		
4MFE15	1,5	1,1		15,9	72	21,2	64	0,94	385	10,3	60	189-227	1,3		

TYPE 3~ 220V	Power		Axial load	I_N	I_{START}	I_{MAX}	Eff.	Cos Φ	H	Kg	S.F.	CABLE	
												Lenght	Size
	HP	kW	N	A			%		mm			m	mm²
4MFET 5	0,5	0,37	1500	2,4/2,8	17,5	2,9	56	0,71	325	6,5	1,6	1,75	1,5
4MFET 7	0,75	0,55		3,3/3,5	18,3	4,2	60	0,73	325	7	1,5		
4MFET 10	1	0,75		4,5/4,9	27	5,5	63	0,7	325	7,6	1,4		
4MFET 15	1,5	1,1		6,2/6,4	24,2	6,9	67	0,71	350	8,7	1,3		
4MFET 20	2	1,5		7,8/8,2	45,5	8,8	72	0,72	385	10,4	1,25		
4MFET 30	3	2,2		10,7/11	63,1	11,8	73	0,72	420	12	1,15	2,5	
4MFET 30H	3	2,2	2500	10,2/10,4	39,8	14,9	75	0,75	383	11	1,15		
4MFET 40	4	3		14,4/14,8	74,9	19,4	77	0,76	418	12,8	1,15		
4MFET 42	4	3	5000	14,4/14,8	74,9	19,4	77	0,76	418	13,1	1,15		
4MFET 42H	4	3	7500	15,1/15,4	76,1	22	75	0,7	550	21,5	1,15		
4MFET 55	5,5	4	2500	16,7/17,1	92,9	23,5	82	0,79	468	15,3	1,15		
4MFET 57	5,5	4	5000	16,7/17,1	92,9	19,4	82	0,79	468	15,6	1,15		
4MFET 57H	5,5	4	7500	18/18,5	81,3	20,2	76	0,76	580	22	1,15		
4MFET 75	7,5	5,5	2500	23,5/25	124,6	26,5	80	0,82	538	18,6	1,15	3	
4MFET 77	7,5	5,5	5000	23,5/25	124,6	26,1	80	0,82	538	18,9	1,15		
4MFET 77H	7,5	5,5	7500	24/26	128	26,6	77	0,78	650	22,4	1,15	4	2
4MFET 100H	10	7,5		33,5/34	143,6	36,7	78	0,86	810	27	1,15		

TYPE 3~ 380V	Power		Axial load	I_N	I_{START}	I_{MAX}	Eff.	Cos Φ	H	Kg	S.F.	CABLE	
												Lenght	Size
	HP	kW	N	A			%		mm			m	mm²
4MFET 5	0,5	0,37	1500	1,6	10,1	1,7	56	0,71	325	6,5	1,6	1,75	1,5
4MFET 7	0,75	0,55		1,9	10,6	2,4	60	0,73	325	7	1,5		
4MFET 10	1	0,75		2,6	15,6	3,2	63	0,7	325	7,6	1,4		
4MFET 15	1,5	1,1		3,6	14	4	67	0,71	350	8,7	1,3		
4MFET 20	2	1,5		4,5	26,3	5,1	72	0,72	385	10,4	1,25		
4MFET 30	3	2,2		6,4	36,5	6,8	73	0,72	420	12	1,15	2,5	
4MFET 30H	3	2,2	2500	5,9	23	8,6	75	0,75	383	11	1,15		
4MFET 40	4	3		8,3	43,3	11,2	77	0,76	418	12,8	1,15		
4MFET 42	4	3	5000	8,3	43,3	11,2	77	0,76	418	13,1	1,15		
4MFET 42H	4	3	7500	8,7	44	12,7	75	0,7	550	21,5	1,15		
4MFET 55	5,5	4	2500	9,6	53,7	13,6	82	0,79	468	15,3	1,15		
4MFET 57	5,5	4	5000	9,6	53,7	13,6	82	0,79	468	15,6	1,15		
4MFET 57H	5,5	4	7500	10,5	47	11,7	76	0,76	580	22	1,15		
4MFET 75	7,5	5,5	2500	13,6	72	15,3	80	0,82	538	18,6	1,15	3	
4MFET 77	7,5	5,5	5000	13,6	72	15,3	80	0,82	538	18,9	1,15		
4MFET 77H	7,5	5,5	7500	13,9	74	15,4	77	0,78	650	22,4	1,15	4	2
4MFET 100H	10	7,5		17,2	83	21,2	78	0,86	810	27	1,15		

TYPE	Power		PROTECTION	CONTROL PANEL
	HP	kW	1~ 220V	
4MFE 5	0,5	0,37	PML 5/20-4	EQSM + 20μF
4MFE 7	0,75	0,55	PML 7/25-6	EQSM + 25μF
4MFE 10	1	0,75	PML 10/35-7	EQSM + 35μF
4MFE 15	1,5	1	PML 15/40-10	EQSM + 40μF
4MFE 20	2	1,5	PML 20/50-13	EQSM + 50μF
4MFE 30	3	2,2	PML 30/80-18	EQSM + 80μF

TYPE	Power		PROTECTION	CONTROL PANEL
	HP	kW	3~ 380V	
4MFET 5	0,5	0,37	PT 7/1,3-2,1	EQSMT 10
4MFET 7	0,75	0,55	PT 7/1,3-2,1	EQSMT 10
4MFET 10	1	0,75	PT 10/1,9-3	EQSMT 10
4MFET 15	1,5	1	PT 15-20/2,9-4,5	EQSMT 10
4MFET 20	2	1,5	PT 20/30-40/4,3-6,8	EQSMT 10
4MFET 30	3	2,2	PT 20/30-40/4,3-6,8	EQSMT 10
4MFET 40	4	3	PT 40-50/5,7-9,1	EQSMT 10
4MFET 42	4	3	PT 40-50/5,7-9,1	EQSMT 10
4MFET 55	5,5	4	PT 55-75/8,6-13,5	EQSMT 10
4MFET 57	5,5	4	PT 55-75/8,6-13,5	EQSMT 10
4MFET 75	7,5	5,5	PT 100/12,5-16,5	EQSMT 10
4MFET 77	7,5	5,5	PT 100/12,5-16,5	EQSMT 10
4MFET 100	10	7,5	PT 125-150/16-21	EQSMT 10

4MFE/6MFE

TYPE 3~ 380V	Power		Axial Load	I_N	Efficiency	Cos Φ	T_S / T_N	H	Kg	S.F.	CABLE	
											Lenght	Size
	HP	kW	N	A	%			mm			m	mm²
6MFET 55	5,5	4	5000/ 10000	9,6	74	0,86	2,4	540	32	1,15	2,8	4
6MFET 75	7,5	5,5		13,0	79	0,82	2,4	570	40	1,15		
6MFET 100	10	7,5	10000	17,4	80	0,82	2,3	600	42	1,15		
6MFET 125	12,5	9,2		20,2	81	0,84	2,3	600	45	1,15		
6MFET 150	15	11		25,6	82	0,81	2,1	700	48	1,15		
6MFET 175	17,5	12,8		27,5	82	0,85	2,1	700	50	1,15		
6MFET 200	20	15		34,1	83	0,81	2,1	760	54	1,15		
6MFET 250	25	18,5		39,8	84	0,83	2,1	830	65	1,15		8
6MFET 300	30	22		47,3	85	0,83	2,1	890	70	1,15		
6MFET 400	40	30	20000	66,2	85	0,81	2,0	1030	90	1,15		
6MFET 500	50	37		84,5	82	0,82	2,0	1170	101	1,15		

TYPE 3~ 220V	Power		Axial Load	I_N	Efficiency	Cos Φ	T_S / T_N	H	Kg	S.F.	CABLE	
											Lenght	Size
	HP	kW	N	A	%			mm			m	mm²
6MFET 55	5,5	4	5000/ 10000	15,9	74	0,83	2,4	540	32	1,15	2,8	4
6MFET 75	7,5	5,5		23,5	72	0,82	2,4	570	40	1,15		
6MFET 100	10	7,5	10000	29,0	80	0,81	2,3	600	42	1,15		
6MFET 125	12,5	9,2		35,0	80	0,82	2,3	600	45	1,15		
6MFET 150	15	11		39,8	82	0,85	2,1	700	48	1,15		
6MFET 175	17,5	12,8		47,0	82	0,83	2,1	700	50	1,15		
6MFET 200	20	15		54,5	82	0,85	2,1	760	54	1,15		
6MFET 250	25	18,5		67,5	84	0,82	2,1	830	65	1,15		8
6MFET 300	30	22		80,2	85	0,82	2,1	890	70	1,15		
6MFET 400	40	30	20000	115	85	0,81	2	1030	90	1,15		

TYPE 3~ 460V	Power		Axial Load	I_N	Efficiency	Cos Φ	T_S / T_N	H	Kg	S.F.	CABLE	
											Lenght	Size
	HP	kW	N	A	%			mm			m	mm²
6MFET 55	5,5	4	5000/ 10000	7,8	76	0,85	2,4	540	32	1,15	2,8	4
6MFET 75	7,5	5,5		11,0	78	0,82	2,4	570	34	1,15		
6MFET 100	10	7,5	10000	14,9	77	0,82	2,3	600	36	1,15		
6MFET 125	12,5	9,2		19,8	78	0,81	2,3	600	39	1,15		
6MFET 150	15	11		21,0	80	0,81	2,1	700	42	1,15		
6MFET 175	17,5	12,8		25,1	81	0,86	2,1	700	45	1,15		
6MFET 200	20	15		27,2	81	0,84	2,1	760	48	1,15		
6MFET 250	25	18,5		33,8	82	0,84	2,1	830	65	1,15		8
6MFET 300	30	22		40,2	83	0,83	2,1	890	70	1,15		
6MFET 400	40	30	20000	53,0	85	0,84	2,0	1030	90	1,15		
6MFET 500	50	37		72,0	85	0,83	2,0	1170	101	1,15		

TYPE	P2		PROTECTION	CONTROL PANEL	CONTROL PANEL star-delta starting 3~ 380/660 V
	HP	kW	3~ 380V		
6MFET 55	5,4	4	PT 55-75/8.6-13.5	EQSMT 10	QST 5
6MFET 75	7,5	5,5	PT 100/12.5-16.5	EQSMT 10	QST 7
6MFET 100	10	7,5	PT 125-150/16-21	EQSMT 15	QST 10
6MFET 125	12,5	9,2	PT 200/22-29	EQSMT 15	QST 15
6MFET 150	15	11	PT 200/22-29	EQSMT 15	QST 15
6MFET 175	17,5	13	-	EQSMT 20	QST 20
6MFET 200	20	15	-	EQSMT 20	QST 20
6MFET 250	25	18,5	-	-	QST 30
6MFET 300	30	22	-	-	QST 30
6MFET 400	40	30	-	-	QST 40
6MFET 500	50	37	-	-	QST 50

6R/8R/10R

Submersible Well Motors

6”, 8”, 10” rewindable submersible water-filled motors with NEMA coupling flange and shaftend. Power from 4 kW up to 185 kW. Avaible in PPC (standard), LPE and PE2+PA insulation class. The motor can be supplied in stainless steel AISI 304, AISI 316 or Duplex EN 1.4462.

Construction features	
Upper and bottom support	G25 (6R / 8R / 10R) stainless steel AISI 304 (6RS / 8RS / 10RS) stainless steel AISI 316 (6RX / 8RX / 10RX) Duplex EN 1.4462 (6RD / 8RD / 10RD)
Stator sleeve	stainless steel AISI 304 - (R) stainless steel AISI 304 - (RS) stainless steel AISI 316 - (RX) Duplex EN 1.4462 - (RD)
Shaft end	stainless steel AISI 431 - (R) stainless steel AISI 431 - (RS) stainless steel AISI 316 - (RX) Duplex EN 1.4462 - (RD)
Seal type	lip seal (standard); mechanical seal (on request)
Bearings	radial and axial, water lubricated
Thrust bearing	Michell
Voltage	3~ 380V ± 10% - 60Hz 3~ 380/660V ± 10% -60Hz
Min. cooling flow	0,5 m/s
Insulation class	Y (max 30° C) for PPC F (max 50° C) for PE2+PA or LPE
Insulation	PPC (standard) PE2 + PA or LPE (on request)
Protection degree	IPX8
Max depth immersion	350m
Available on demand	- PT 100 - Star/Delta starting - Cooling Sleeve - Cer./Carb./NBR Seal - SIC/SIC/NBR Seal

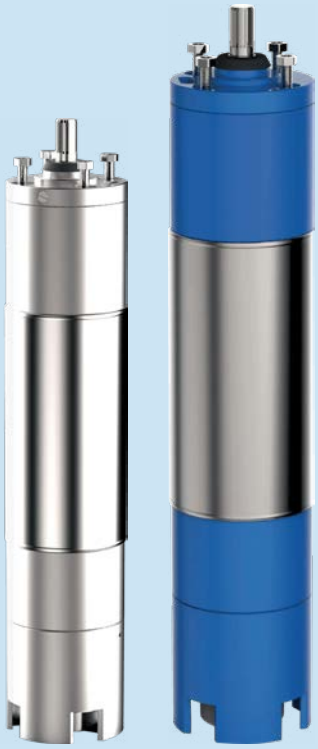

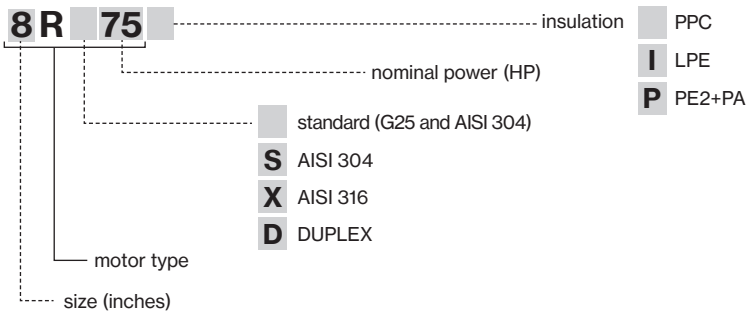

6R-6RS-6RX-6RD

TYPE	Power		V	I_N	rpm	Efficency %			Cos Φ			Starting				Axial load	Start/ hour (max)
												Direct		Star-delta	Statoric		
	HP	kW		A		50%	75%	100%	50%	75%	100%	Cs/Cn	Is / In	Is / In	Is / In	N	
6R7	7,5	5,5	230 400 460	21,3 12,3 10,7	3427 3435 3441	77 76 75	82 81 80	81 80 79	0,67 0,65 0,63	0,78 0,76 0,74	0,83 0,81 0,79	1,60	5,60	1,90	3,40	16000	15
6R10	10	7,5	230 400 460	28,2 16,3 14,3	3428 3435 3439	78 77 76	82,5 81,5 80,5	82 81 80	0,68 0,66 0,64	0,78 0,76 0,74	0,84 0,82 0,80	1,80	5,70	1,90	3,40		
6R12	12,5	9,2	230 400 460	34,4 19,9 17,3	3431 3437 3443	79 78 77	83 82 81	82 81 80	0,68 0,66 0,64	0,79 0,77 0,75	0,85 0,83 0,81	1,80	5,70	1,90	3,40		
6R15	15	11	230 400 460	40,5 23,4 20,3	3431 3439 3446	80 79 78	84,5 83,5 82,5	83,5 82,5 81,5	0,69 0,67 0,65	0,79 0,77 0,75	0,85 0,83 0,81	1,90	5,90	2,00	3,50		
6R17	17,5	13	230 400 460	47,2 27,3 23,7	3435 3440 3446	80 80 79	84,5 83,5 82,5	84 83 82	0,69 0,67 0,65	0,79 0,77 0,75	0,85 0,83 0,81	1,80	6,00	2,00	3,60		
6R20	20	15	230 400 460	55 31,5 27,4	3435 3440 3446	82 81 80	85 84 83	84 83 82	0,69 0,67 0,65	0,79 0,77 0,75	0,85 0,83 0,81	1,70	5,90	2,00	3,50		
6R25	25	18,5	230 400 460	66,2 38,3 33,3	3440 3446 3449	82 81 80	85,5 84,5 83	85 84 82,5	0,69 0,67 0,65	0,79 0,77 0,75	0,85 0,83 0,81	1,70	5,60	1,90	3,40	25000	
6R30	30	22	230 400 460	78 45,1 39,2	3437 3448 3453	82,5 81,5 80	85,5 84,5 83	85 84 82,5	0,70 0,68 0,66	0,80 0,78 0,76	0,86 0,84 0,82	1,70	5,90	2,00	3,50		
6R35	35	26	230 400 460	91,5 52,9 46	3440 3449 3457	82,5 81,5 80	86 85 83,5	85,5 84,5 83,0	0,71 0,69 0,67	0,81 0,79 0,77	0,86 0,84 0,82	1,70	5,70	1,90	3,40		
6R40	40	30	230 400 460	106 61,1 53,2	3446 3453 3460	82,5 81,5 80	86,0 85,0 83,5	85,5 84,5 83	0,72 0,70 0,68	0,81 0,79 0,77	0,86 0,84 0,82	1,70	5,60	1,90	3,40		
6R50	50	37	230 400 460	131 75,8 66	3451 3457 3464	83 82 80,5	86,5 85,5 84	85 84 82,5	0,72 0,70 0,68	0,81 0,79 0,77	0,86 0,84 0,82	1,60	5,60	1,90	3,40		

Service factor: 60Hz=1.15 - Direction of rotation (view from shaft projection side: anti-clockwise
Cs = Starting torque - Cn = Nominal couple - Is = Starting current - In = Nominal current

TYPE	Power		Cables		Cable lenght	Max water temperature by winding type	
			Starting				
	HP	kW	Direct	Star Delta	m	PPC	PE2-PA / LPE
			460 V ± 5%	460 / 800 V			
6R7	7,5	5,5	4G × 4 mm²	2 × (4G × 4 mm²)	3	30 °C	50 °C
6R10	10	7,5	4G × 4 mm²	2 × (4G × 4 mm²)			
6R12	12,5	9,2	4G × 4 mm²	2 × (4G × 4 mm²)			
6R15	15	11	4G × 4 mm²	2 × (4G × 4 mm²)			
6R17	17,5	13	4G × 6 mm²	2 × (4G × 4 mm²)			
6R20	20	15	4G × 6 mm²	2 × (4G × 4 mm²)			
6R25	25	18,5	4G × 6 mm²	2 × (4G × 4 mm²)			
6R30	30	22	4G × 6 mm²	2 × (4G × 4 mm²)			
6R35	35	26	4G × 10 mm²	2 × (4G × 6 mm²)			
6R40	40	30	4G × 10 mm²	2 × (4G × 6 mm²)			
6R50	50	37	4G × 10 mm²	2 × (4G × 6 mm²)			

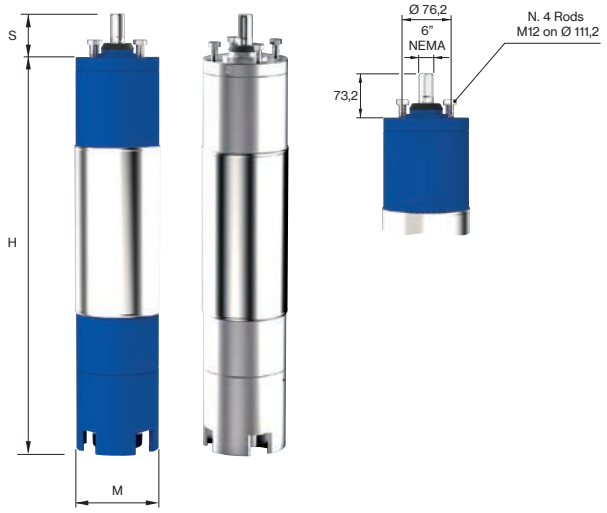

TYPE	DIMENSIONS			Kg
	H	S	M	
	mm			
6R7	671	73,2	145	45
6R10	701			55
6R12	751			60
6R15	811			65
6R17	841			70
6R20	931			75
6R25	991			83
6R30	1071			92
6R35	1181			100
6R40	1251			108
6R50	1341			118

TYPE	Power		V	I_N	rpm	Efficency %			Cos Φ			Starting				Axial load	Start/hour (max)
												Direct		Star-delta	Statoric		
	HP	kW		A		50%	75%	100%	50%	75%	100%	Cs/Cn	Is / In	Is / In	Is / In	N	
			230	106,5	3436	79,8	85,2	84,3	0,77	0,81	0,84						
8R40	40	30	400	61,7	3445	80,1	85	84,7	0,76	0,80	0,83	2,05	6,40	2,10	3,80		
			460	54	3456	79,3	84,5	85	0,75	0,79	0,82						
			230	126	3439	80,3	85,7	84,8	0,79	0,83	0,88						
8R50	50	37	400	73	3449	80,6	85,5	85,2	0,77	0,81	0,86	1,95	5,70	2	3,70		
			460	63,5	3457	79,8	85	85,5	0,75	0,79	0,84						
			230	149	3457	80,8	86,2	85,3	0,76	0,86	0,87						
8R60	60	45	400	86,3	3462	81,1	86	85,7	0,74	0,81	0,86	1,95	5,80	2	3,70		
			460	75,1	3469	80,3	85,5	86	0,72	0,79	0,84						
			230	184	3461	81,3	86,7	85,8	0,76	0,85	0,89						
8R75	75	55	400	106,2	3468	81,6	86,5	86,2	0,74	0,81	0,87	1,85	5,80	2	3,60		
			460	92,2	3472	80,8	86	86,5	0,72	0,80	0,84					45000	10
			230	218	3463	82,4	87,5	86,8	0,76	0,86	0,89						
8R90	90	66	400	126	3469	82,6	87,4	87,2	0,74	0,82	0,87	1,85	5,80	2	3,50		
			460	109,6	3473	81,9	86,9	87,5	0,72	0,79	0,84						
			230	247,7	3462	82,3	87,7	86,8	0,75	0,85	0,89						
8R100	100	75	400	143,2	3470	82,6	87,5	87,2	0,73	0,81	0,87	1,80	5,80	2	3,50		
			460	124,6	3476	81,8	87	87,5	0,71	0,77	0,84						
			230	302,9	3465	83	86	85,7	0,75	0,84	0,89						
8R125	125	92	400	175,1	3472	83,5	86,5	86,3	0,74	0,83	0,88	1,80	5,70	1,90	3,50		
			460	152,3	3478	83	86	86,3	0,72	0,81	0,86						
			230	366,1	3467	85,5	86,5	86	0,74	0,83	0,89						
8R150	150	110	400	211	3473	86,1	87	86,6	0,73	0,82	0,87	1,80	5,70	1,90	3,50		
			460	183,6	3478	85,5	86,5	86	0,72	0,81	0,84						

Service factor: 60Hz=1.15 - Direction of rotation (view from shaft projection side: anti-clockwise
Cs = Starting torque - Cn = Nominal couple - Is = Starting current - In = Nominal current

TYPE	Power		Cables		Cable lenght	Max water temperature by winding type	
			Starting				
	HP	kW	Direct	Star Delta	m	PPC	PE2-PA / LPE
			460 V ± 5%	460 / 800 V			
8R40	40	30	3 × 1 × 10 mm²	6 × 1 × 10 mm²			
8R50	50	37	3 × 1 × 10 mm²	6 × 1 × 10 mm²			
8R60	60	45	3 × 1 × 16 mm²	6 × 1 × 10 mm²			
8R75	75	55	3 × 1 × 16 mm²	6 × 1 × 10 mm²			
8R90	90	66	3 × 1 × 25 mm²	6 × 1 × 16 mm²	5	30 °C	50 °C
8R100	100	75	3 × 1 × 25 mm²	6 × 1 × 16 mm²			
8R125	125	92	3 × 1 × 25 mm²	6 × 1 × 16 mm²			
8R150	150	110	3 × 1 × 35 mm²	6 × 1 × 25 mm²			

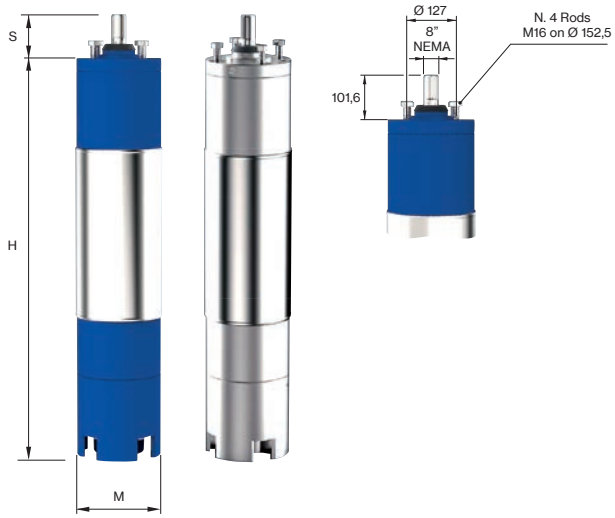

TYPE	DIMENSIONS			Kg
	H	S	M	
	mm			
8R40	993			150
8R50	1043			160
8R60	1123			178
8R75	1233	101,6	194	200
8R90	1302			214
8R100	1383			230
8R125	1583			270
8R150	1733			300

10R-10RS-10RX-10RD

TYPE	Power		V	I_N	rpm	Efficency %			Cos Φ			Starting				Axial load	Start/ hour (max)
												Direct		Star-delta	Statoric		
	HP	kW		A		50%	75%	100%	50%	75%	100%	Cs/Cn	Is / In	Is / In	Is / In	N	
			230	247	3460	86,9	87	88	0,73	0,80	0,84						
10R100	100	75	400	142,7	3465	85,9	88	88,3	0,72	0,84	0,86	1,80	6,40	1,90	3,40		
			460	124	3470	86,4	88,3	88,5	0,64	0,77	0,82						
			230	303	3462	87,2	87,3	88,3	0,74	0,83	0,84						
10R125	125	92	400	174,5	3469	86,2	88,3	88,6	0,71	0,83	0,86	1,80	6,40	1,90	3,40		
			460	152	3474	86,7	88,6	88,8	0,63	0,75	0,82						
			230	358	3465	87,9	88	89	0,71	0,81	0,85						
10R150	150	110	400	207	3470	86,9	89	89,3	0,73	0,84	0,86	1,60	6,30	1,80	3,40		
			460	180	3475	87,4	89,3	89,5	0,63	0,77	0,81						
			230	423	3469	87,5	88,2	89	0,73	0,81	0,83						
10R175	175	130	400	245,3	3475	86,5	89,3	89,4	0,71	0,83	0,85	1,55	6,70	1,80	3,30	60000	10
			460	213	3482	87,1	89,5	89,6	0,62	0,75	0,82						
			230	480	3475	87,1	88,2	89	0,72	0,82	0,84						
10R200	200	150	400	277,2	3483	86,1	88,5	89,1	0,71	0,81	0,86	1,55	6,50	1,80	3,30		
			460	241	3488	86,5	88,1	88,7	0,65	0,75	0,83						
			230	542	3478	86,5	87,5	88,6	0,72	0,82	0,84						
10R225	225	165	400	313,3	3488	85,4	87,2	88,5	0,71	0,81	0,86	1,55	6,50	1,80	3,30		
			460	273	3492	86,0	87,3	88,2	0,65	0,75	0,83						
			230	590	3480	87,4	88	89	0,73	0,83	0,85						
10R250	250	185	400	342,2	3490	86,5	88,7	89,3	0,72	0,82	0,87	1,50	6,50	1,80	3,30		
			460	298	3496	87,3	89,3	89,5	0,65	0,77	0,84						

Service factor: 60Hz=1.15 - Direction of rotation (view from shaft projection side: anti-clockwise
Cs = Starting torque - Cn = Nominal couple - Is = Starting current - In = Nominal current

TYPE	Power		Cables		Cable lenght	Max water temperature by winding type	
			Starting				
	HP	kW	Direct	Star Delta	m	PPC	PE2-PA / LPE
			460 V ± 5%	460 / 800 V			
10R100	100	75	3 × 1 × 25 mm²	6 × 1 × 16 mm²			
10R125	125	92	3 × 1 × 25 mm²	6 × 1 × 16 mm²			
10R150	150	110	3 × 1 × 35 mm²	6 × 1 × 16 mm²			
10R175	175	130	3 × 1 × 35 mm²	6 × 1 × 25 mm²	5	30 °C	50 °C
10R200	200	150	3 × 1 × 50 mm²	6 × 1 × 25 mm²			
10R225	225	165	3 × 1 × 50 mm²	6 × 1 × 35 mm²			
10R250	250	185	3 × 1 × 50 mm²	6 × 1 × 35 mm²			

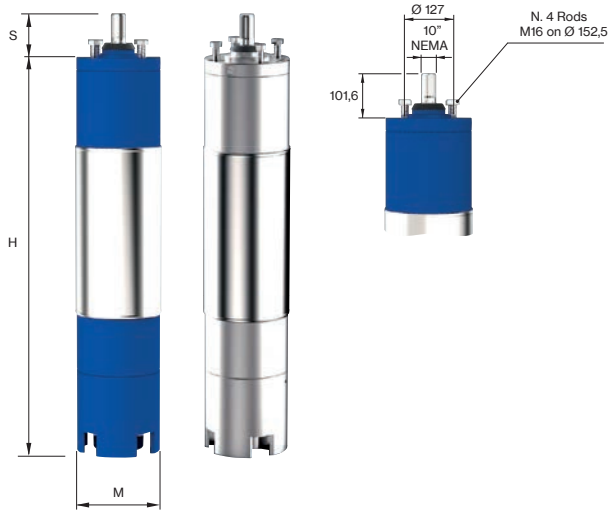

TYPE	DIMENSIONS			Kg
	H	S	M	
	mm			
10R100	1284			270
10R125	1354			310
10R150	1504			350
10R175	1634	101,6	240	385
10R200	1734			415
10R225	1854			444
10R250	1984			480

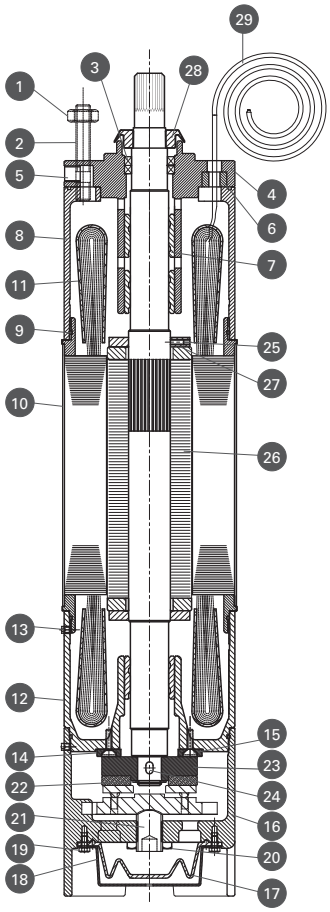

N. CODE	(*) N°	DESCRIPTION	MATERIAL STANDARD VERSION R	MATERIAL VERSION RS-RX-RD
1		**N.4 Nuts**	AISI 304	AISI 304 / AISI 316 / DUPLEX
2		**N.4 Studs**	AISI 304	AISI 304 / AISI 316 / DUPLEX
3(*)	1	**N.2 Seal rings**	NBR	NBR
4		**Upper support**	CAST IRON	AISI 304 / AISI 316 / DUPLEX
5		**N.2 Grains for Liquid filling**	AISI 304	AISI 304 / AISI 316 / DUPLEX
6		**Grommet**	NBR	NBR
7(*)	3	**N.3 Bearings**	GRAPHITE	GRAPHITE
8		**Motor casing**	CAST IRON	AISI 304 / AISI 316 / DUPLEX
9(*)	4	**N.4 O-ring**	NBR	NBR
10		**Motor external sleeve**	AISI 304	AISI 304 / AISI 316 / DUPLEX
11		**N.2 Covers winding protection**	POM	POM
12		**Lower support**	CAST IRON	AISI 304 / AISI 316 / DUPLEX
13		**N.3 Screw**	AISI 304	AISI 304 / AISI 316 / DUPLEX
14(*)	2	**N.2 Disks controsuspention**	TEFLON	TEFLON
15		**N.2 Screws for controsuspention**	AISI 304	AISI 304
16		**Base motor**	CAST IRON	AISI 304 / AISI 316 / DUPLEX
17(*)	1	**Diaphram**	NBR	NBR
18		**Cover diaphram**	AISI 304	AISI 304 / AISI 316 / DUPLEX
19		**N.4 Screw for cover diaphram**	AISI 304	AISI 304 / AISI 316 / DUPLEX
20		**Nut**	AISI 304	AISI 304
21		**Screw**	AISI 304	AISI 304
22		**Seeger**	AISI 304	AISI 304
23(*)	1	**Trust bearing**	AISI + GRAPHITE	AISI + GRAPHITE
24		**Key**	AISI 304	AISI 304
25		**N.2 Grains for stabilizer**	AISI 304	AISI 304
26		**Complete rotor**	AISI	AISI
27		**N.2 Stabilizers**	AISI	AISI
28(*)	1	**Deflector**	NBR	NBR
29		**Cable**	H07 RNF	H07 RNF

**Reccomended spare parts*

OPERATING CONDITIONS AT DIFFERENT WATER TEMPERATURE

All 6” - 8” - 10” standard motors with PPC windings can operate at liquid temperatures up to 30 °C without derating factor. From 31 °C till 43 °C the motors have to be derated according to the factor shown in the following graph.

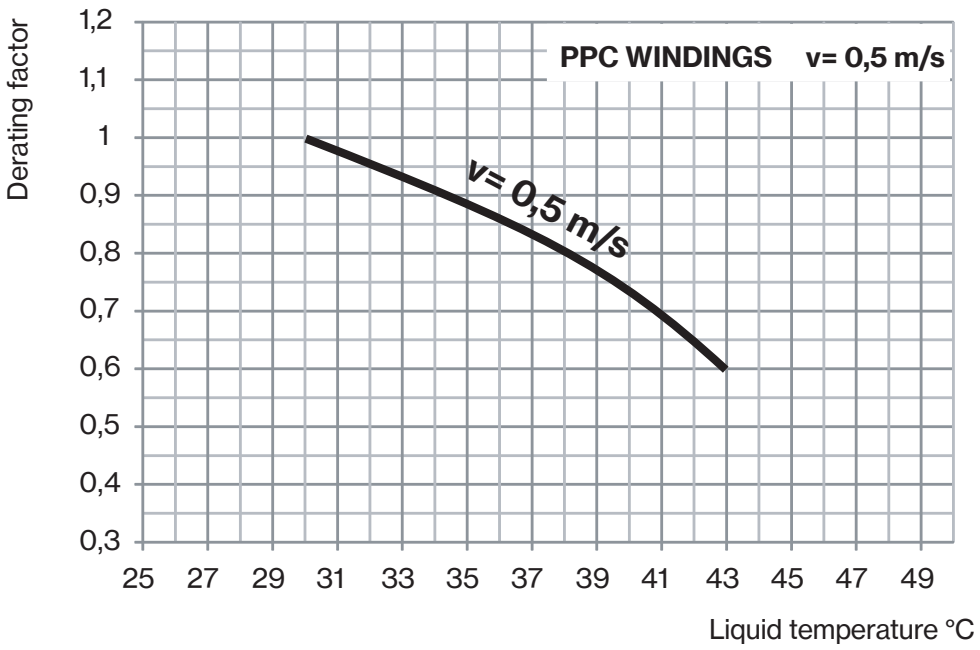

All 6” - 8” - 10” motors with PE2+PA / LPE windings can operate at liquid temperatures up to 50 °C without derating factor. From 51 °C till 64 °C the motors have to be derated according to the factor shown in the following graph.

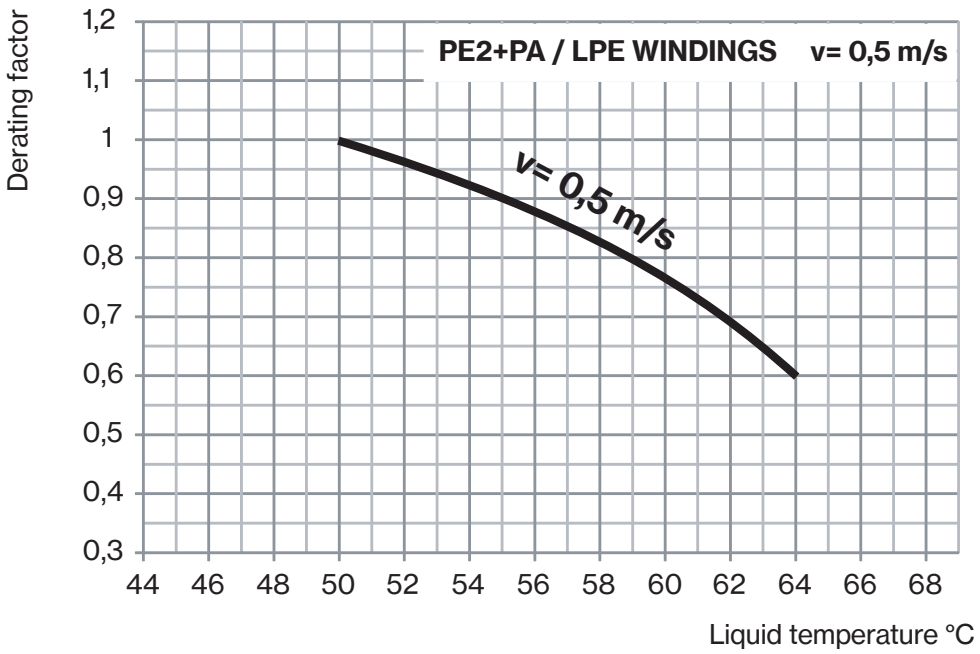

Moter size	Max motor starts per hour	Winding max temperature (°C)			Liquid max temperature (°C)		
		PPC	LPE	PE2+PA	PPC	LPE	PE2+PA
6”	15	70	80	80	30	50	50
8”	10	70	80	80	30	50	50
10”	10	70	80	80	30	50	50

PPC = Y insulation class
LPE = F insulation class
PE2+PA = / F insulation class
Minimum liquid velocity for motor 6” - 8” - 10”: 0,5 m/s

PTR12/PTR14

Submersible Well Motors

12” - 14” rewindable submersible water-filled motors. Power from 185 kW up to 400 kW. It is avaiable with DOL or STAR-DELTA starting type. Standard PE2+PA winding, for temperatures up to 30°C.

Construction features	
Upper and bottom support	GG25 or stainless steel AISI 316
Stator sleeve	stainless steel AISI 316
Shaft end	stainless steel
Mechanical seal	SIC / SIC / NBR
Bearings	steel / NBR
Voltage	3~ 380-460V - 60Hz
Cooling flow	min 0,5 m/s
Insulation class	F
Insulation	PE2 + PA
Protection degree	IPX8
Available on demand	- Full motor in AISI 316 - Full motor in AISI 904 - PT 100 - Star/Delta starting - Cooling Sleeve - Clockwise rotation

PTR 12 - 220kW-400V - T

- motor type
- size (inches)
- nominal power
- nominal voltage
- motor **T** 3~

PTR12/PTR14

TYPE 3~ 380V	V	P_2		I_N	I_S/I_N	P_1	rpm	Efficiency	Cos Φ	CABLE	
										Lenght	Size
		HP	kW	A		kW		%		m	mm²
PTR12 - 220kW	460	300	220	452	6,41	306	3525	87,9	0,85	8	4×70
PTR12 - 250kW	460	340	250	510	6,82	345	3525	88	0,85		4×70
PTR14 - 294kW	460	400	300	595	6,00	389	3540	89	0,82		3×70+1×50
PTR14 - 330kW	460	450	330	645	6,00	427	3545	90	0,83		3×70+1×50
PTR14 - 367kW	460	500	370	725	6,50	480	3550	90	0,83		3×70+1×50
PTR14 - 404kW	460	550	400	750	6,50	520	3540	90	0,87		3×70+1×50

TYPE	DIMENSIONS				Kg
	Power		Axial load	L	
	HP	kW	N	mm	
PTR12 - 220kW	300	220	70000	2110	700
PTR12 - 250kW	340	250		2280	775
PTR14 - 294kW	400	300	70000	2020	845
PTR14 - 330kW	450	330		2160	906
PTR14 - 367kW	500	370		2320	1010
PTR14 - 404kW	550	400		2460	1105

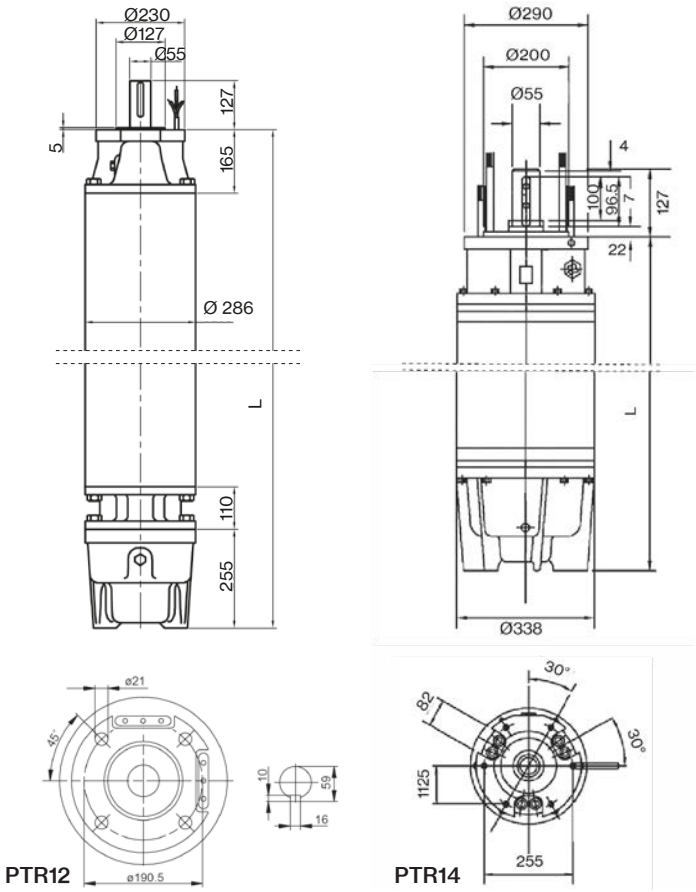

POWER DERATING AT DIFFERENT LIQUID TEMPERATURE

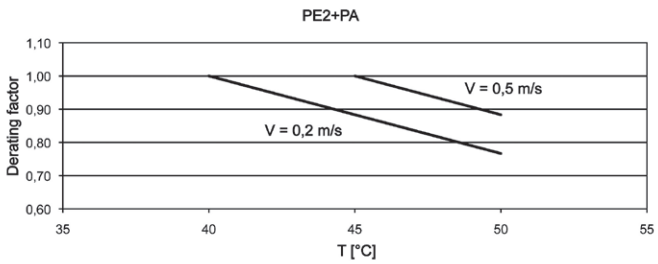

For PTR12 versions the maximum liquid temperature is 10 °C lower than that indicated in the graph.

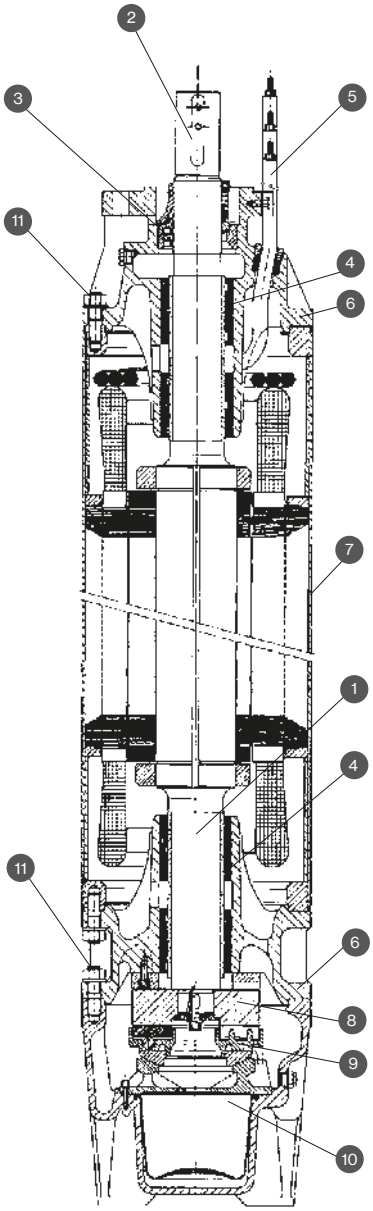

N.	PARTS	STD VERSION	VERSION 316 SS	VERSION 904 SS
1	**SHAFT**	STAINLESS STEEL	STAINLESS STEEL	STAINLESS STEEL
2	**SHAFT TERMINAL**	AISI 316	AISI 316	AISI 904
3	**MECHANICAL SEAL**	CERAMIC/CARBON	SIC/SIC	SIC/SIC
4	**BUSHES**	STEEL/NBR	STEEL/NBR	STEEL/NBR
5	**CABLE**	EPDM	EPDM	EPDM
6	**STRUCTURAL PARTS**	CAST IRON	AISI 316	AISI 904
7	**JACKET**	AISI 316	AISI 316	AISI 904
8	**THRUST PLATE**	STEEL	STEEL	STEEL
9	**THRUST BEARING**	STEEL/NBR	STEEL/NBR	STEEL/NBR
10	**DIAPHRAGM**	EPDM	EPDM	EPDM
11	**SCREWS**	AISI 304	AISI 316	AISI 904

FORAS®

WATER PUMPS

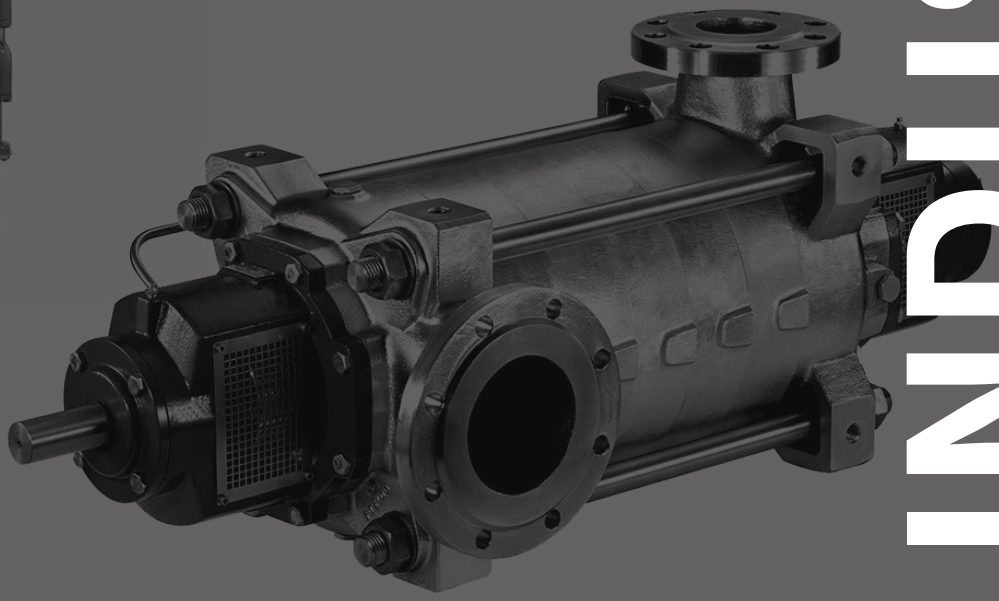

INDUSTRIAL LINE

BM-4BM

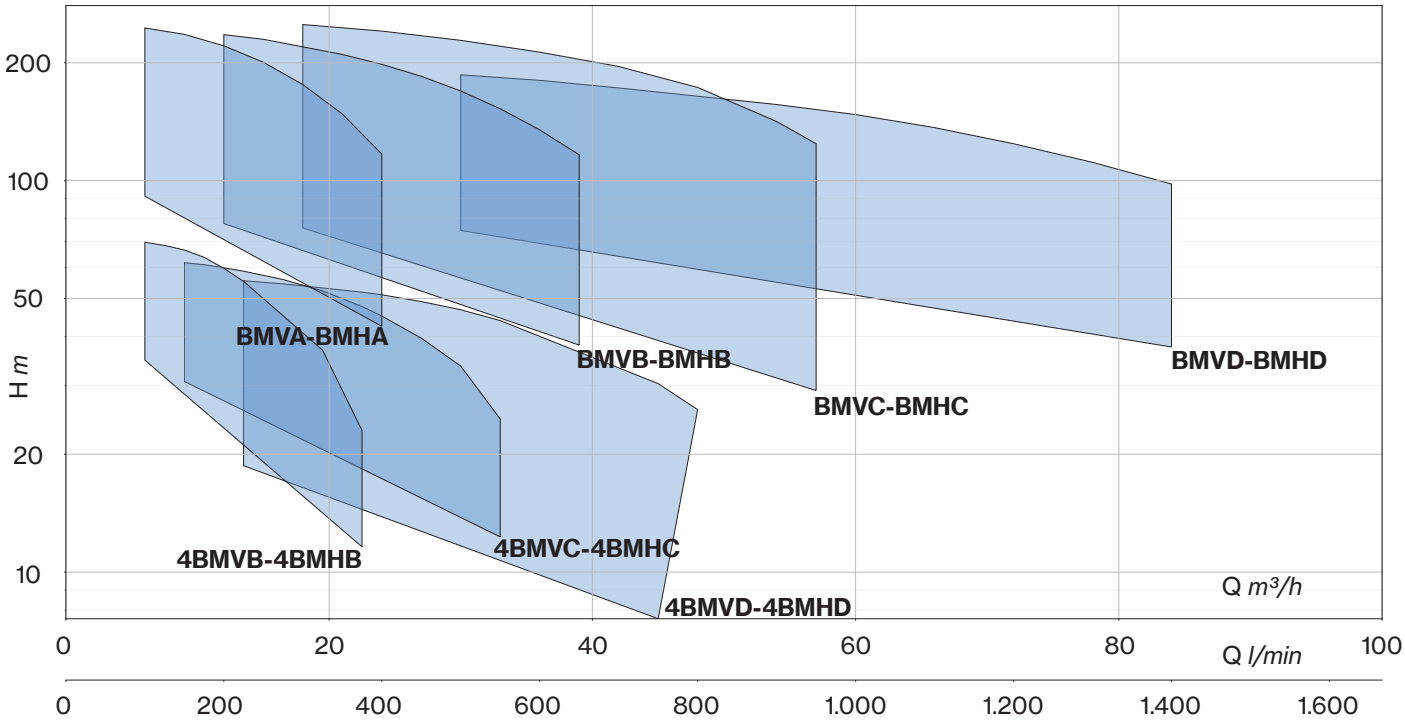
200
100
50
20
10
H m
BMVA-BMHA
BMVB-BMHB
BMVC-BMHC
BMVD-BMHD
4BMVB-4BMHB
4BMVC-4BMHC
4BMVD-4BMHD
Q m³/h
0
20
40
60
80
100
Q l/min
0
200
400
600
800
1.000
1.200
1.400
1.600

BMV-4BMV

Multistage Vertical

Multi-stage centrifugal pumps that guarantee high pressure. Particularly suitable for civil and industrial applications - in particular pressurisation systems, fire fighting systems and washing plant.

Construction features	
Pump body	cast iron
Motor bracket	cast iron
Impeller	brass
Mechanical seal	ceramic-graphite-NBR
Motor shaft	stainless steel AISI 304
Liquid temperature	-10 ÷ +90 °C
Operating pressure	max 30 bar

Motor	
2 and 4 poles induction motor	3~ 220/380V - 60Hz IE3 efficiency class or standard
Insulation class	F
Protection degree	IPX5

BMV C - 3 / 18,5 -4 -01

- direction of nozzles: standard; 01 02 03 on request
- mech. seal: standard; 4 Widia-Widia
- nominal power (HP)
- No. of impellers
- hydraulic size
- pump version: V vertical
- pump type

BMH-4BMH

Multistage Horizontal

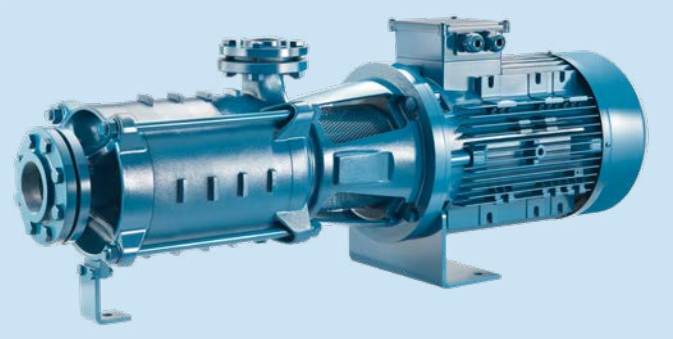

Multi-stage centrifugal pumps that guarantee high pressure. Particularly suitable for civil and industrial applications - in particular pressurisation systems, fire fighting systems and washing plant.

Construction features	
Pump body	cast iron
Motor bracket	cast iron
Impeller	brass
Mechanical seal	ceramic-graphite-NBR
Motor shaft	stainless steel AISI 304
Liquid temperature	-10 ÷ +90 °C
Operating pressure	max 30 bar

Motor	
2 and 4 poles induction motor	3~ 220/380V - 60Hz IE3 efficiency class or standard
Insulation class	F
Protection degree	IPX5

BMH C - 3 / 18,5 -4 -01

- direction of nozzles: standard; **01** **02** on request
- mech. seal: standard; **4** Widia-Widia
- nominal power (HP)
- No. of impellers
- hydraulic size
- pump version **H** horizontal
- pump type

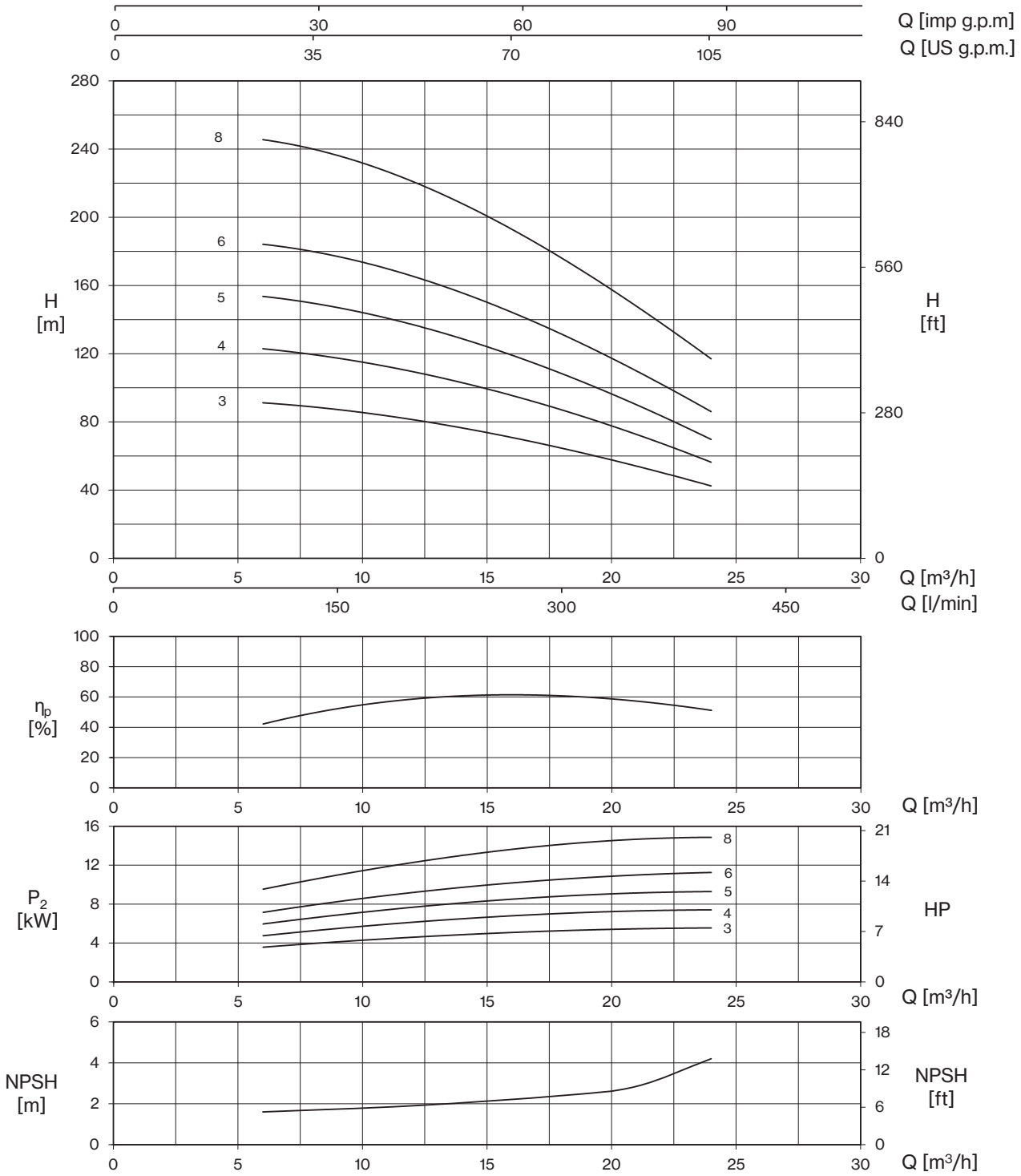

TYPE - 60 Hz	P2		P1	CURRENT	Q (m³/h - l/min - l/s)							
				3~ 380V	0	6	9	12	15	18	21	24
					0	100	150	200	250	300	350	400
					0	1,67	2,5	3,33	4,17	5	5,83	6,67
	HP	kW	kW	A	H (m)							
BMVA/BMHA-3/5,5	7,5	5,5	6,3	11,0	94,2	91,3	87,1	81,5	73,8	64,5	54,1	42,5
BMVA/BMHA-4/7,5	10	7,5	8,3	14,3	127,1	122,9	117,3	109,6	99,4	87,1	72,6	56,4
BMVA/BMHA-5/9,2	12,5	9,2	10,3	17,7	158,6	153,7	146,9	137,3	124,2	108,2	90,1	69,7
BMVA/BMHA-6/11	15	11	12,3	20,9	190,1	184,2	177,1	165,6	150,1	131,4	110,0	86,0
BMVA/BMHA-8/15	20	15	16,3	27,6	253,6	245,4	236,5	221,0	200,7	176,0	148,0	116,9

Tolerance: ISO 9906:2012 - Grade 3B

BMV-BMH B ~3500 rpm

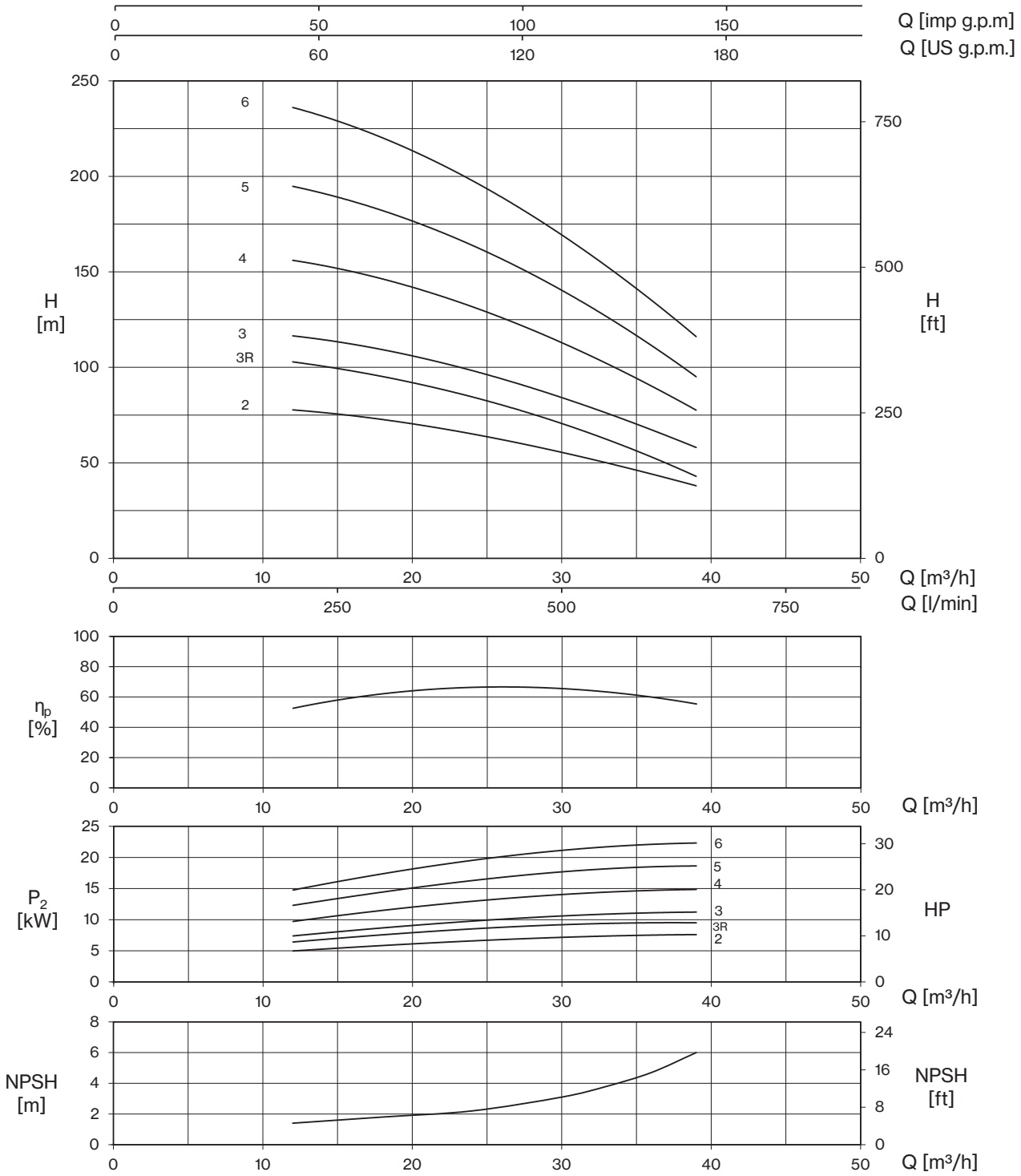

TYPE - 60 Hz	P2		P1	CURRENT	Q (m³/h - l/min - l/s)										
				3~ 380V	0	12	15	18	21	24	27	30	33	36	39
					0	200	250	300	350	400	450	500	550	600	650
					0	3,33	4,17	5	5,83	6,67	7,5	8,33	9,17	10	10,83
	HP	kW	kW	A	H (m)										
BMVB/BMHB-2/7,5	10	7,5	8,5	14,7	79,1	77,7	75,7	72,5	69,3	65,1	60,7	55,4	50,0	44,2	38,0
BMVB/BMHB-3R/9,2	12,5	9,2	10,5	18,0	107,5	102,9	99,4	95,1	90,2	84,6	78,1	70,7	62,2	52,9	43,0
BMVB/BMHB-3/11	15	11	12,2	20,8	119,9	116,4	113,6	109,2	104,1	98,3	91,9	84,2	76,0	67,2	58,1
BMVB/BMHB-4/15	20	15	16,3	27,6	161,0	156,1	151,7	146,5	139,4	131,6	123,3	112,9	101,9	90,2	77,6
BMVB/BMHB-5/18,5	25	18,5	20,3	34,8	201,3	194,7	189,6	181,6	173,5	164,0	153,2	140,5	126,4	111,2	95,3
BMVB/BMHB-6/22	30	22	24,2	41,7	242,5	236,0	229,7	218,9	210,0	198,2	184,7	169,4	152,6	134,8	116,4

Tolerance: ISO 9906:2012 - Grade 3B

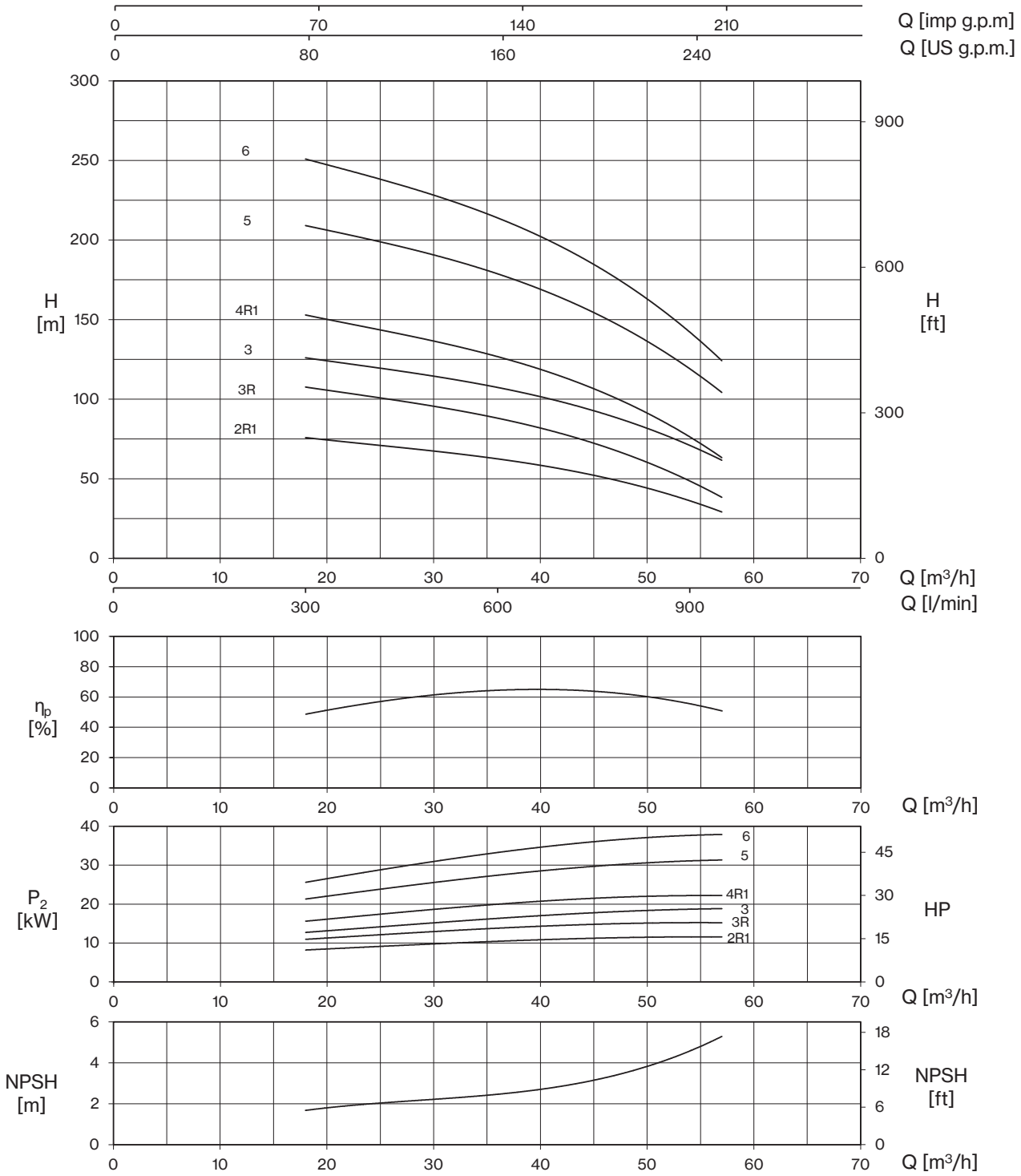

TYPE - 60 Hz	P2		P1	CURRENT	Q (m³/h - l/min - l/s)								
				3~ 380V	0	18	24	30	36	42	48	54	57
					0	300	400	500	600	700	800	900	950
					0	5	6,67	8,33	10	11,67	13,33	15	15,83
	HP	kW	kW	A	H (m)								
BMVC/BMHC-2R1/11	15	11	12,6	21,5	78,1	75,7	72,2	67,3	62,2	56,3	47,7	36,1	29,1
BMVC/BMHC-3R/15	20	15	16,7	28,3	112,0	107,4	102,1	95,3	87,8	78,7	65,3	48,0	38,7
BMVC/BMHC-3/18,5	25	18,5	20,5	35,0	127,6	125,7	121,1	114,6	106,7	98,1	87,1	70,9	61,5
BMVC/BMHC-4R1/22	30	22	24,1	41,4	158,3	151,9	145,6	136,2	126,0	114,4	98,4	75,9	63,3
BMVC/BMHC-5/30	40	30	34,1	58,2	213,1	208,8	201,3	190,7	177,9	163,7	144,7	118,5	104,4
BMVC/BMHC-6/37	50	37	41,0	70,7	257,7	250,5	241,0	228,3	213,0	195,7	173,0	141,6	124,2

Tolerance: ISO 9906:2012 - Grade 3B

BMV-BMH D ~3500 rpm

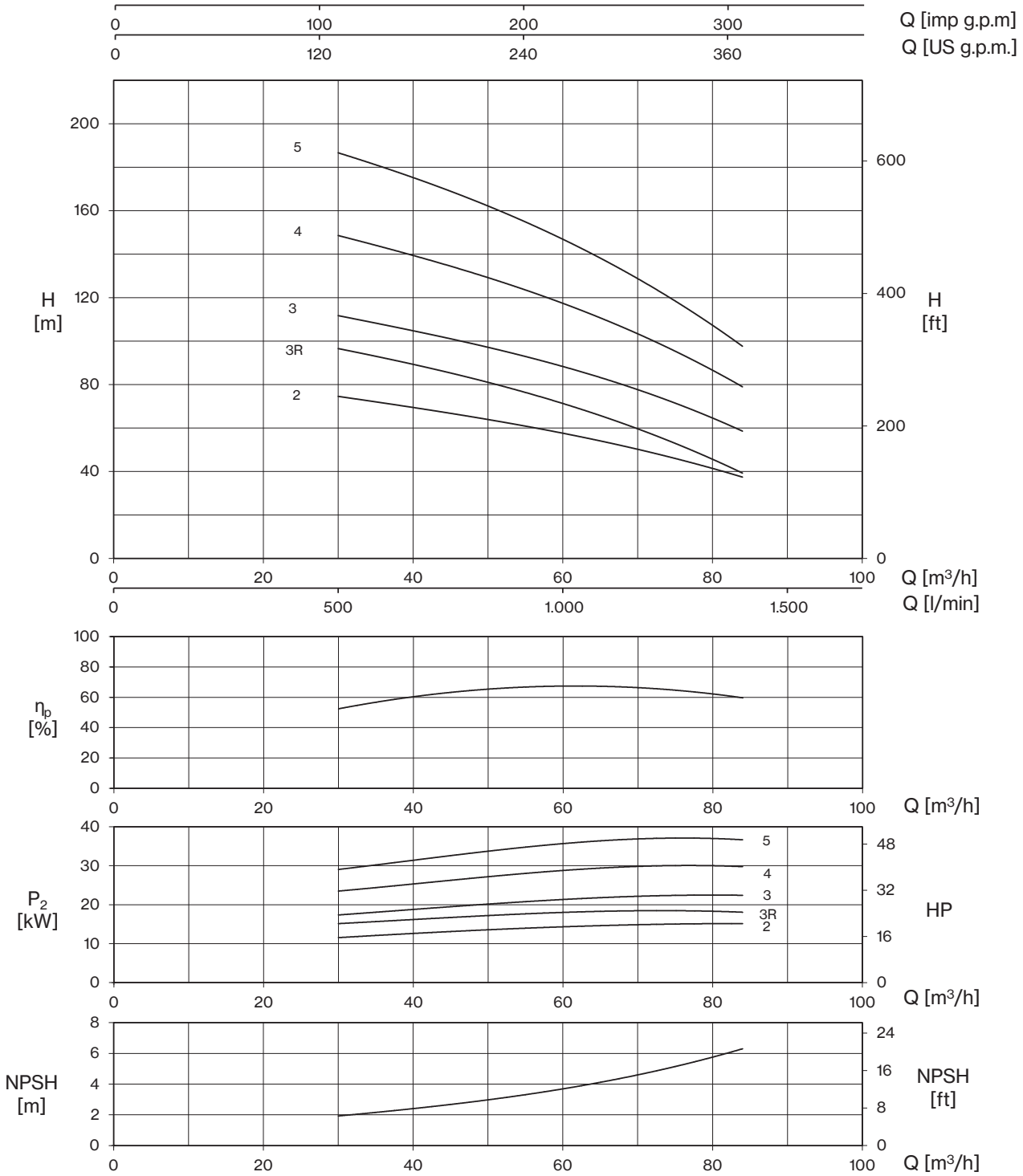

TYPE - 60 Hz	P2		P1	CURRENT	Q (m³/h - l/min - l/s)										
				3~ 380V	0	30	36	42	48	54	60	66	72	78	84
					0	500	600	700	800	900	1000	1100	1200	1300	1400
					0	8,33	10	11,67	13,33	15	16,67	18,33	20	21,67	23,33
	HP	kW	kW	A	H (m)										
BMVD/ BMHD -2/15	20	15	16,6	28,1	75,3	74,6	71,5	68,3	65,1	61,6	57,7	53,4	48,4	43,1	37,6
BMVD/ BMHD-3R/18,5	25	18,5	20,0	34,3	99,9	96,7	92,2	87,6	82,9	77,5	71,3	64,3	57,0	48,8	39,3
BMVD/ BMHD-3/22	30	22	24,3	41,8	112,6	111,6	107,7	102,9	98,8	94,1	88,5	82,1	75,0	67,2	58,8
BMVD/ BMHD-4/30	40	30	32,6	55,8	150,5	148,7	143,2	137,0	131,5	125,1	117,8	109,1	99,7	90,0	79,3
BMVD/ BMHD-5/37	50	37	40,0	69,3	189,2	186,4	180,4	172,5	164,4	156,5	147,5	136,6	124,2	111,4	98,0

Tolerance: ISO 9906:2012 - Grade 3B

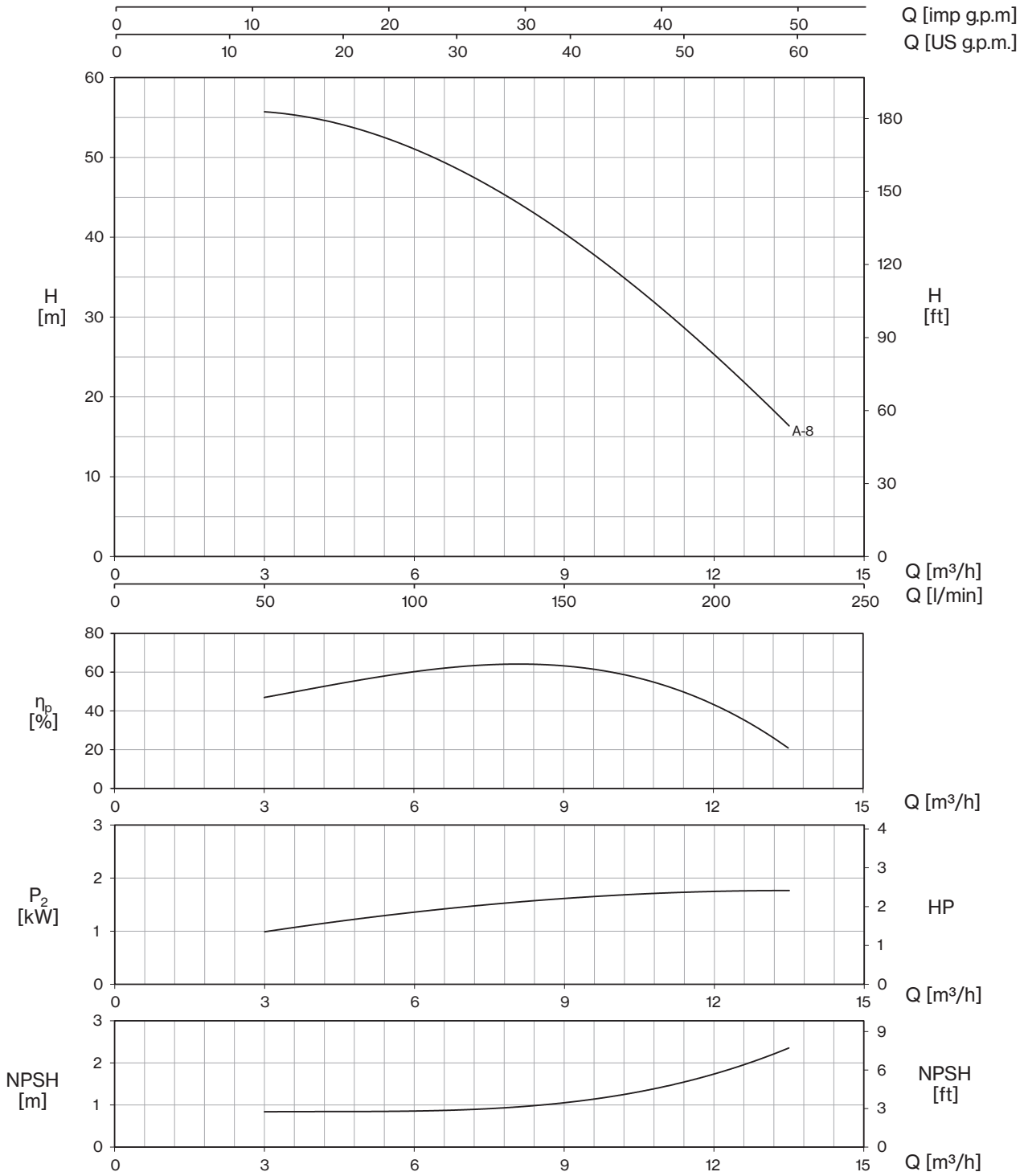

TYPE - 60 Hz	P2		Q (m³/h - l/min - l/s)								
			0	3	4,5	6	7,5	9	10,5	12	13,5
			0	50	75	100	125	150	175	200	225
			0	0,83	1,25	1,67	2,08	2,50	2,92	3,33	3,75
	HP	kW	H (m)								
4BMVA/4BMHA-8/2,2	3	2,2	56,0	55,7	54,2	51,3	46,3	40,2	33,4	25,7	16,2

4BMV-4BMH B ~1750 rpm

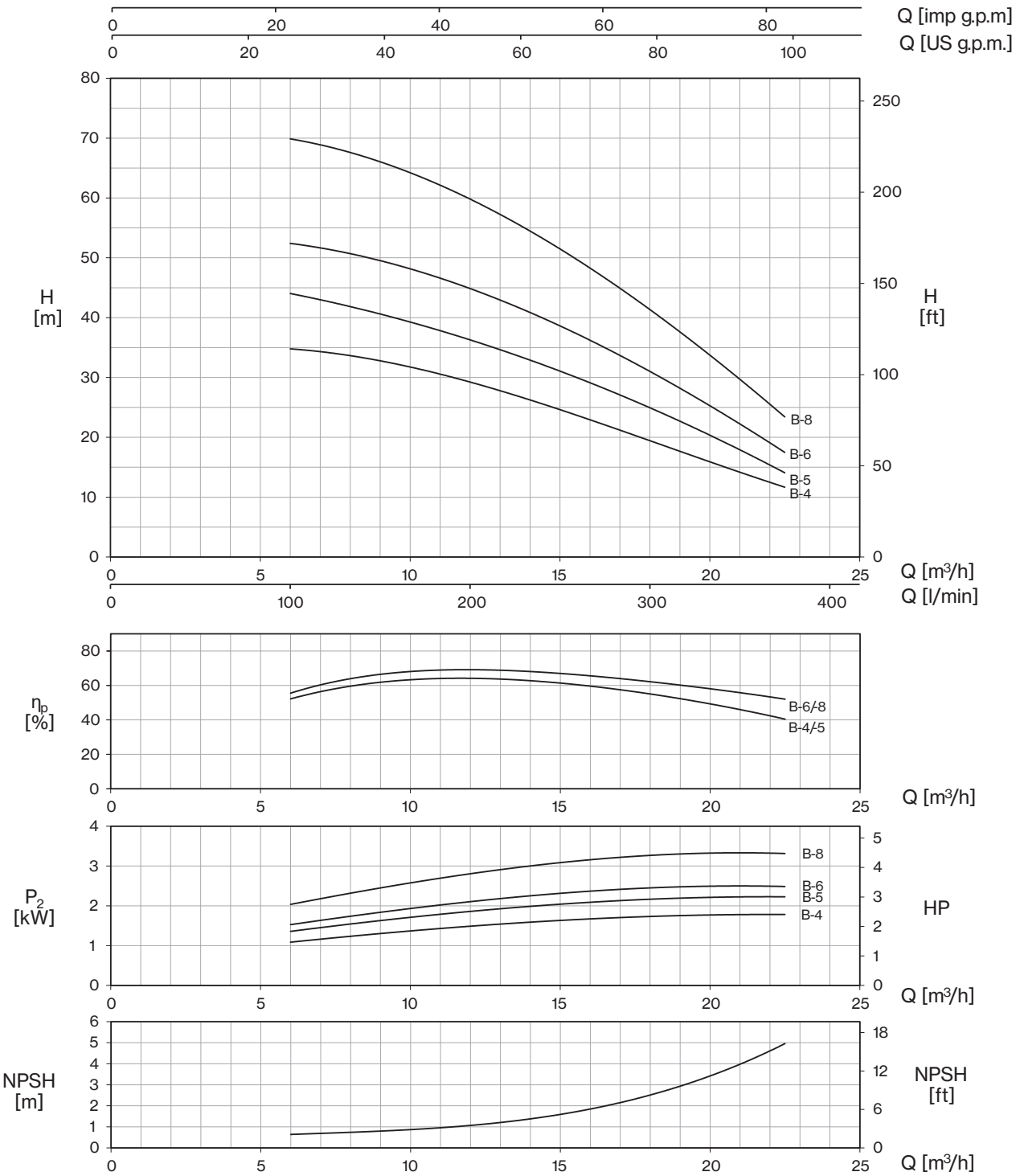

TYPE - 60 Hz	P2		Q (m³/h - l/min - l/s)									
			0	6	7,5	9	10,5	12	13,5	16,5	19,5	22,5
			0	100	125	150	175	200	225	275	325	375
			0	1,67	2,08	2,50	2,92	3,33	3,75	4,58	5,42	6,25
	HP	kW	H (m)									
4BMVB/4BMHB-4/2,2	3	2,2	35,4	34,8	34,0	32,8	31,2	29,3	27,0	22,0	16,9	11,6
4BMVB/4BMHB-5/2,2	3	2,2	44,3	43,5	42,5	41,0	39,0	36,6	33,8	27,5	21,1	14,6
4BMVB/4BMHB-6/3	4	3	53,2	52,2	51,3	49,9	47,8	44,7	41,5	34,4	27,7	17,2
4BMVB/4BMHB-8/4	5,5	4	70,9	69,6	68,3	66,5	63,7	59,7	55,3	45,9	36,9	23,0

Tolerance: ISO 9906:2012 - Grade 3B

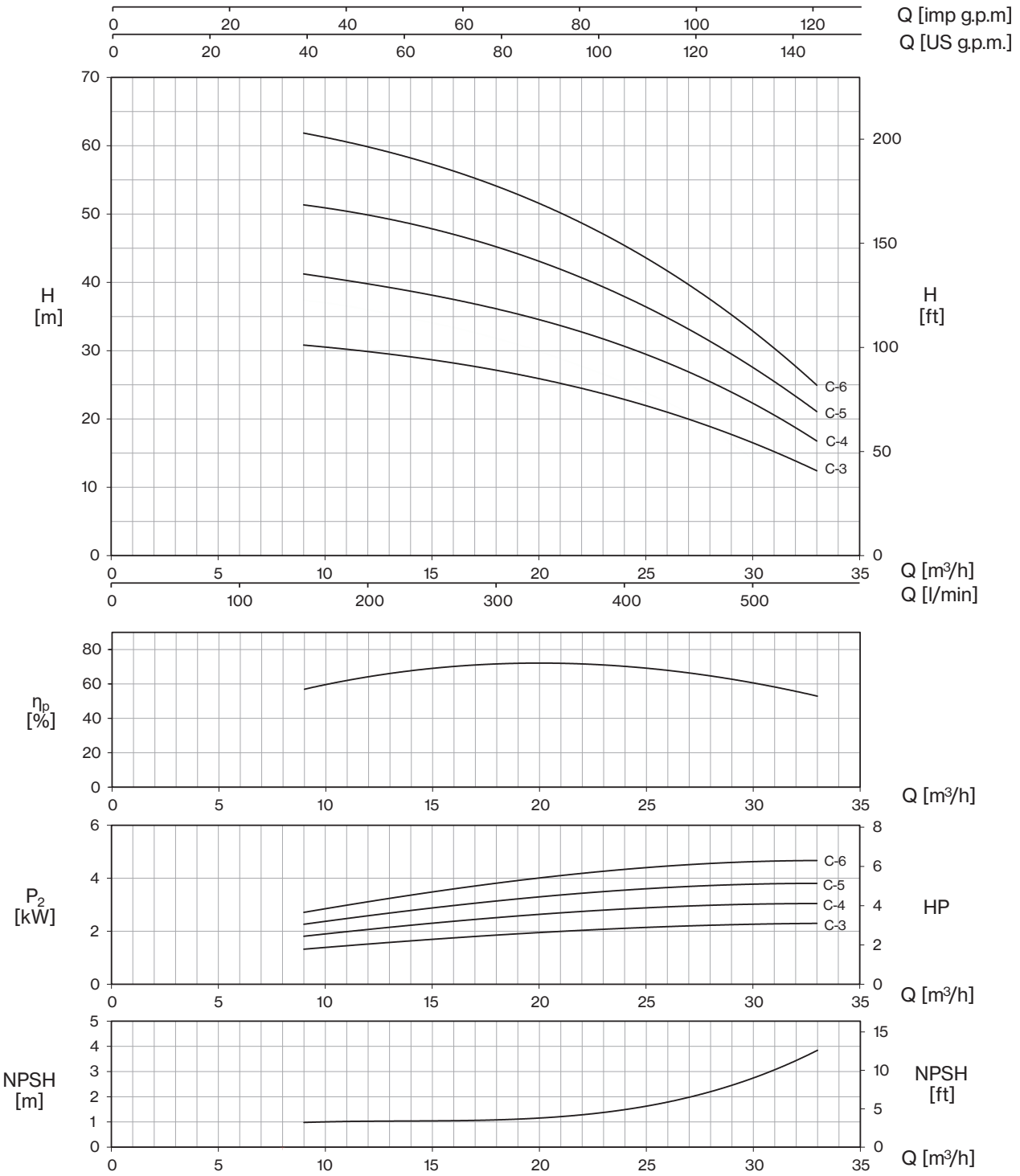

TYPE - 60 Hz	P2		Q (m³/h - l/min - l/s)									
			0	9	10,5	13,5	16,5	19,5	22,5	24	30	33
			0	150	175	225	275	325	375	400	500	550
			0	2,50	2,92	3,75	4,58	5,42	6,25	6,67	8,33	9,17
	HP	kW	H (m)									
4BMVC/4BMHC-3/2,2	3	2,2	30,2	30,7	30,5	29,4	27,9	26,2	24,0	22,8	16,7	12,3
4BMVC/4BMHC-4/3	4	3	40,1	41,0	40,6	39,1	37,3	35,0	32,0	30,3	23,1	16,4
4BMVC/4BMHC-5/4	5,5	4	50,1	51,3	50,8	48,8	46,6	43,8	40,0	37,8	27,8	21,0
4BMVC/4BMHC-6/5,5	7,5	5,5	60,3	61,7	61,0	58,7	55,9	52,3	47,7	45,1	33,6	24,6

Tolerance: ISO 9906:2012 - Grade 3B

4BMV-4BMH D ~1750 rpm

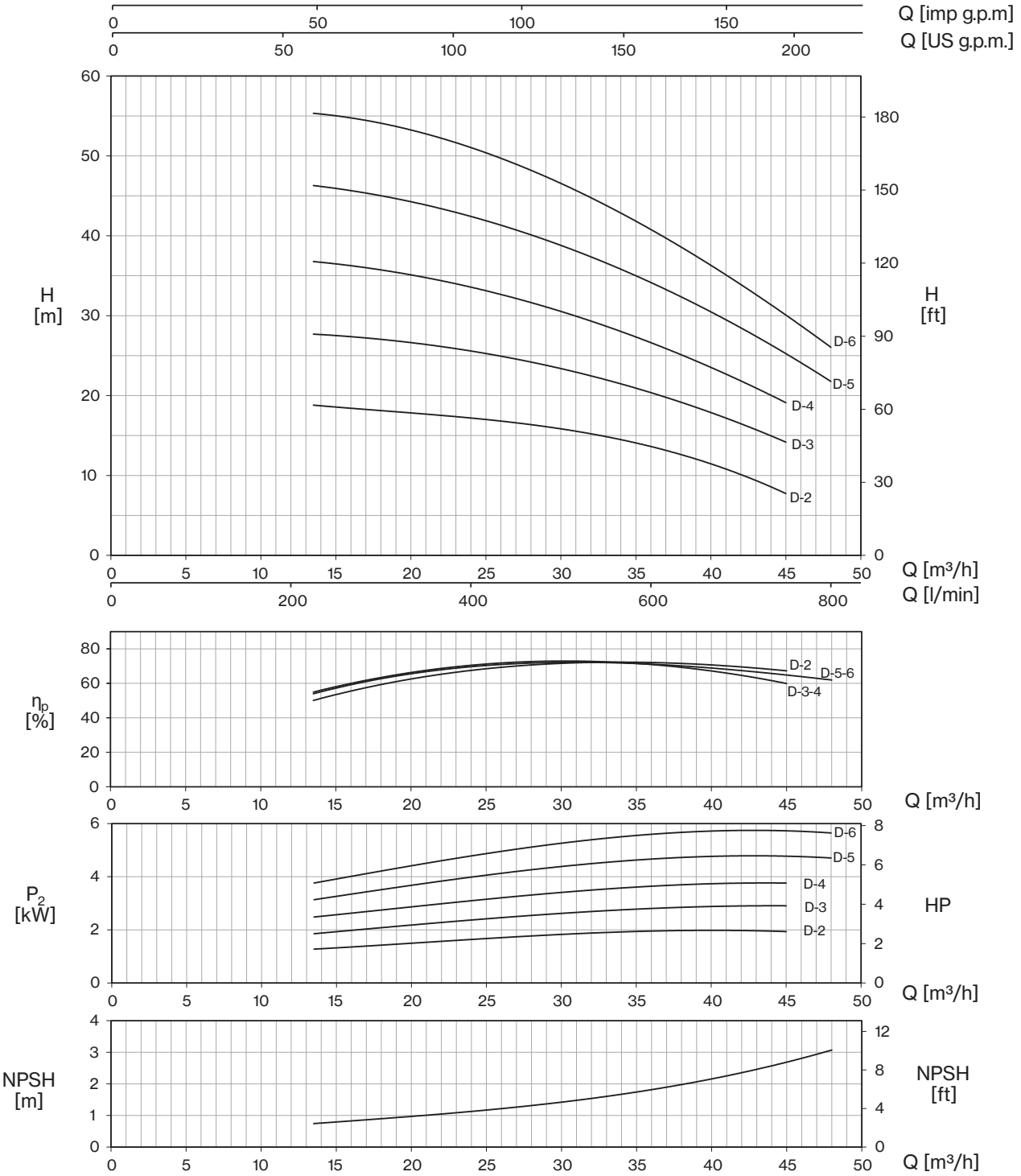

TYPE - 60 Hz	P2		Q (m³/h - l/min - l/s)									
			0	13,5	19,5	24	27	30	33	39	45	48
			0	225	325	400	450	500	550	650	750	800
			0	3,75	5,42	6,67	7,50	8,33	9,17	10,83	12,50	13,33
	HP	kW	H (m)									
4BMVD/4BMHD-2/2,2	3	2,2	18,3	18,7	18,0	17,2	16,5	15,7	14,7	12,3	7,6	-
4BMVD/4BMHD-3/3	4	3	27,1	27,7	26,7	25,6	24,6	23,5	22,0	18,4	14,2	-
4BMVD/4BMHD-4/4	5,5	4	36,2	36,8	35,2	33,6	32,3	30,6	28,7	24,2	19,2	-
4BMVD/4BMHD-5/5,5	7,5	5,5	45,2	46,3	44,4	42,6	41,0	39,0	36,6	30,9	25,3	22,0
4BMVD/4BMHD-6/7,5	10	7,5	54,2	55,5	53,2	51,1	49,1	46,8	43,9	37,0	30,3	26,0

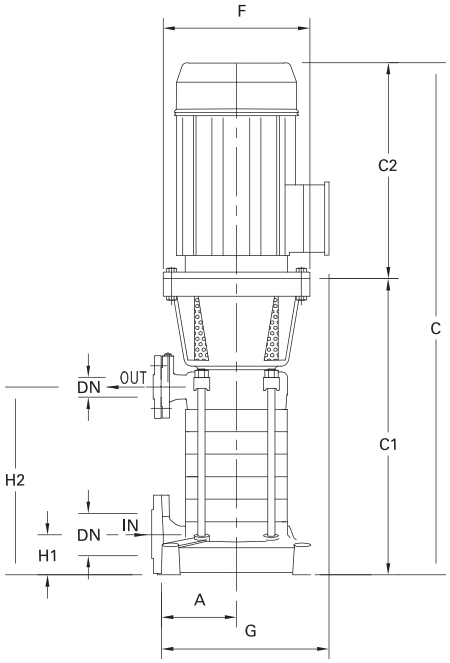

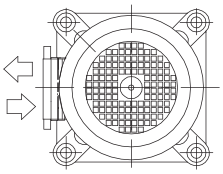

Standard pos.

STANDARD

Not available for pump type: BMVB 2/7.5, BMVC-2R1/11, BMVD-2/15, 4BMVD-2/2.2

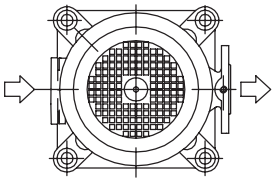

Pos. 01

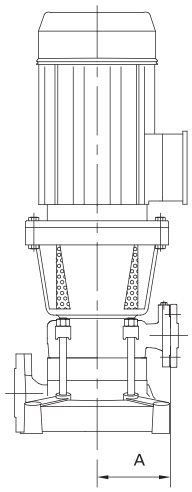

STANDARD FOR:

BMVB-2/7.5
BMVC-2R1/11
BMVD-2/15
4BMVD-2/2.2

Direction of nozzles

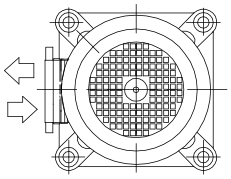

Standard pos.

Not available for pump type: BMVB 2/7.5, BMVC-2R1/11, BMVD-2/15, 4BMVD-2/2.2

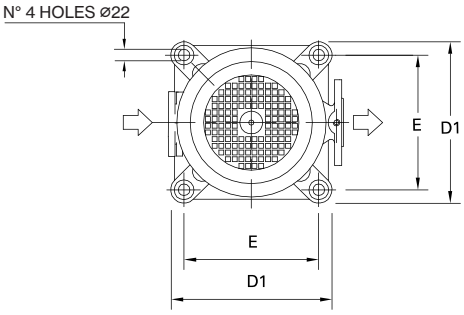

Pos. 01

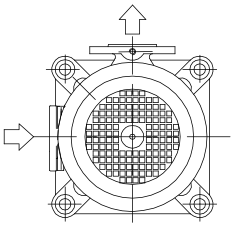

Pos. 02

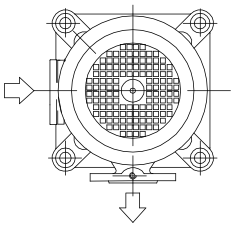

Pos. 03

DIMENSIONS (mm)				
DN	D	K	holes	
			n°	ø
40	150	110	4	18
50	165	125	4	18
65	185	145	4	18
80	200	160	8	18

flanges

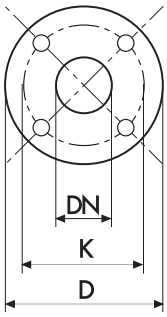

BMV ~3500 rpm

TYPE	DN IN	DN OUT	N. STAGE	DIMENSIONS (mm)													Kg
				A	C	C1	C2	D1	E	F	G	H1	H2	I	L	M	
BMVA -3/5,5	(UNI PN 16) 50	(UNI PN 40) 40	3	175	921,5	544,5	377	306	256	300	355	82	255,5	1100	400	500	139,5
BMVA -4/7,5			4		972,5	595,5	377			300	355		306,5	1100	400	500	155,5
BMVA -5/9,2			5		1062,5	646,5	416			300	355		357,5	1100	400	500	173
BMVA -6/11			6		1113,5	697,5	416			300	355		408,5	1100	400	500	191
BMVA -8/15			8		1297,5	799,5	498			350	410		510,5	1400	500	500	255,5
BMVB -2/7,5	(UNI PN 16) 50	(UNI PN 40) 40	2	175	870,5	493,5	377	306	256	300	355	82	204,5	1100	400	500	136,5
BMVB -3R/9,2			3		931	515	416			300	335		255,5	1100	400	500	154
BMVB -3/11			3		931	515	416			300	355		255,5	1100	400	500	157
BMVB -4/15			4		1013	515	498			350	410		306,5	1400	500	500	217,5
BMVB -5/18,5			5		1056	515	541			350	410		357,5	1400	500	500	243
BMVB -6/22			6		1056	515	541			350	410		408,5	1400	500	500	264
BMVC -2R1/11	(UNI PN 16) 65	(UNI PN 40) 50	2	200	944	528	416	332	282	300	380	95	233	1100	400	500	166,5
BMVC -3R/15			3		1086	588	498			350	435		293	1100	400	500	231
BMVC -3/18,5			3		1129	588	541			350	435		293	1400	500	500	247
BMVC -4R1/22			4		1189	648	541			350	435		353	1400	500	500	273
BMVC -5/30			5		1276	708	568			350	450		413	1400	500	500	318,5
BMVC -6/37			6		1376	768	608			350	450		473	1400	500	500	356
BMVD -2/15	(UNI PN 16) 65	(UNI PN 40) 50	2	200	1026	528	498	332	282	350	435	95	233	1400	400	500	216
BMVD -3R/18,5			3		1129	588	541			350	435		293	1400	500	500	245
BMVD -3/22			3		1129	588	541			350	435		293	1400	500	500	257
BMVD -4/30			4		1216	648	568			350	450		353	1400	500	500	303
BMVD -5/37			5		1316	708	608			350	450		413	1400	500	500	339

4BMV ~1750 rpm

TYPE	DN IN	DN OUT	N. STAGE	DIMENSIONS (mm)													Kg
				A	C	C1	C2	D1	E	F	G	H1	H2	I	L	M	
4BMVA -8/2,2	(UNI PN 16) 50	(UNI PN 40) 40	8	175	1078	762,5	315	306	256	250	345	82	510,5	1100	400	500	183
4BMVB -4/2,2			4	175	874	558,5	315	306	256	250	345	82	306,5	1100	400	500	136
4BMVB -5/2,2			5		925	609,5	315			250	345		357,5	1400	500	500	140
4BMVB -6/3			6		976	660,5	315			250	345		408,5	1400	500	500	171
4BMVB -8/4			8		1103	762,5	340			250	368		511	1400	500	500	200
4BMVC -3/2,2	(UNI PN 16) 65	(UNI PN 40) 50	3	200	866	551	315	332	282	250	370	95	293	1100	400	500	192
4BMVC -4/3			4		926	611	315			250	370		353	1100	400	500	194
4BMVC -5/4			5		1011	671	340			250	393		413	1100	400	500	202
4BMVC -6/5,5			6		1116	731	385			300	423		473	1400	500	500	206
4BMVD -2/2,2	(UNI PN 16) 65	(UNI PN 40) 50	2	200	806	491	315	332	282	250	370	95	233	1100	400	500	135
4BMVD -3/3			3		866	551	315			250	370		293	1100	400	500	167
4BMVD -4/4			4		951	611	340			250	393		353	1100	400	500	189
4BMVD -5/5,5			5		1056	671	385			300	423		413	1100	400	500	194
4BMVD -6/7,5			6		1156	731	425			300	423		473	1400	500	500	218

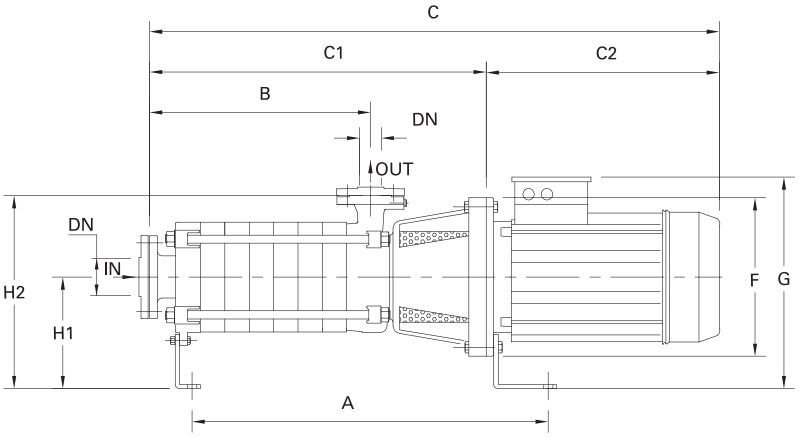

STANDARD

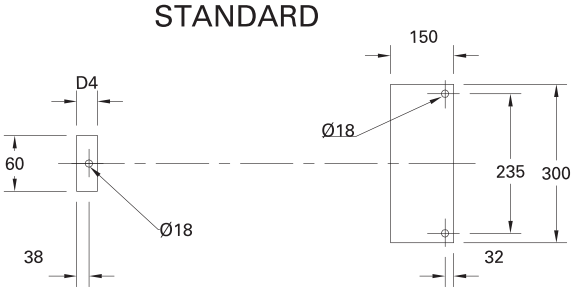

Direction of nozzles

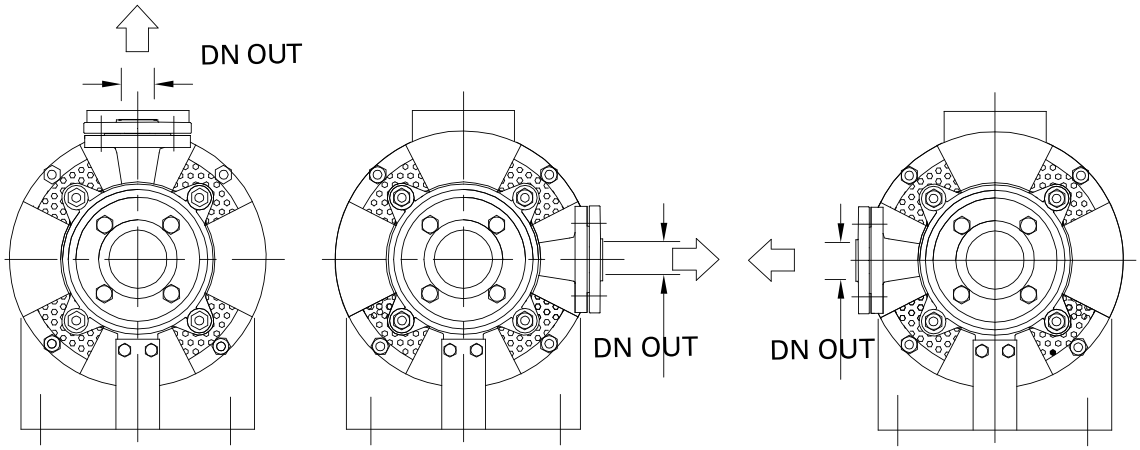

STANDARD Pos. 01 Pos. 02

DIMENSIONS (mm)				
DN	D	K	holes	
			n°	ø
40	150	110	4	18
50	165	125	4	18
65	185	145	4	18
80	200	160	8	18

flanges

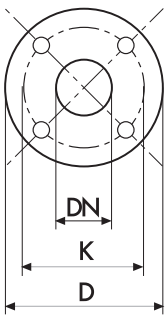

BMH ~3500 rpm

TYPE	DN IN	DN OUT	N. STAGE	DIMENSIONS (mm)													Kg
				A	B	C	C1	C2	F	G	H1	H2	D4	I	L	M	
BMHA -3/5,5	(UNI PN 16) 65	(UNI PN 40) 40	3	604	256,5	922,5	545,5	377	300	425	245	420	70	1100	400	500	140,5
BMHA -4/7,5			4	655	307,5	973,5	596,5	377	300	425				1100	400	500	156,5
BMHA -5/9,2			5	706	358,5	1063,5	647,5	416	300	425				1100	400	500	174
BMHA -6/11			6	757	409,5	1114,5	698,5	416	300	425				1100	400	500	191,5
BMHA -8/15			8	859	511,5	1298,5	800,5	498	350	480				1400	500	500	256
BMHB -2/7,5	(UNI PN 16) 65	(UNI PN 40) 40	2	553	205,5	531,5	494,5	37	300	425	245	420	70	1100	400	500	137
BMHB -3R/9,2			3	604	256,5	961,5	545,5	416	300	425				1100	400	500	154,5
BMHB -3/11			3	604	256,5	961,5	545,5	416	300	425				1100	400	500	157,5
BMHB -4/15			4	655	307,5	1094,5	596,5	498	350	480				1400	500	500	217,5
BMHB -5/18,5			5	706	358,5	1188,5	647,5	541	350	480				1400	500	500	243
BMHB -6/22			6	757	409,5	1239,5	698,5	541	350	480				1400	500	500	264
BMHC -2R1/11	(UNI PN 16) 80	(UNI PN 40) 50	2	596	243	954	538	416	300	425	245	445	60	1100	400	500	164,5
BMHC -3R/15			3	656	303	1096	598	498	350	480				1100	400	500	228,5
BMHC -3/18,5			3	656	303	1139	598	541	350	480				1400	500	500	244,5
BMHC -4R1/22			4	716	363	1199	658	541	350	480				1400	500	500	270,5
BMHC -5/30			5	776	423	1286	718	568	350	495				1400	500	500	316
BMHC -6/37			6	836	483	1386	778	608	350	495				1400	500	500	353,5
BMHD -2/15	(UNI PN 10) 80	(UNI PN 40) 50	2	596	243	1036	538	498	350	480	245	445	60	1400	400	500	214
BMHD -3R/18,5			3	656	303	1139	598	541	350	480				1400	500	500	243
BMHD -3/22			3	656	303	1139	598	541	350	480				1400	500	500	255
BMHD -4/30			4	716	363	1226	658	568	350	495				1400	500	500	310,5
BMHD -5/37			5	776	423	1326	718	608	350	495				1400	500	500	337

4BMH ~1750 rpm

TYPE	DN IN	DN OUT	N. STAGE	DIMENSIONS (mm)													Kg
				A	B	C	C1	C2	F	G	H1	H2	D4	I	L	M	
4BMHA -8/2,2	(UNI PN 16) 65	(UNI PN 40) 40	8	822	511,5	1079	763,5	315	250	415	245	420	70	1100	400	500	183
4BMHB -4/2,2			4	618	511,5	875	559,5	315	250	415	245	420	70	1100	400	500	136
4BMHB -5/2,2			5	670	307,5	926	610,5	315	250	415				1400	500	500	140
4BMHB -6/3			6	720	358,5	977	661,5	315	250	415				1400	500	500	171
4BMHB -8/4			8	720	409,5	1104	763,5	340	250	438				1400	500	500	200
4BMHC -3/2,2	(UNI PN 16) 80	(UNI PN 40) 50	3	620	303	876	561	315	250	415	245	445	60	1100	400	500	192
4BMHC -4/3			4	680	363	936	621	315	250	415				1100	400	500	194
4BMHC -5/4			5	740	423	1021	681	340	250	438				1100	400	500	202
4BMHC -6/5,5			6	800	483	1126	741	385	300	468				1400	500	500	206
4BMHD -2/2,2	(UNI PN 10) 80	(UNI PN 40) 50	2	560	243	816	501	315	250	415	245	445	60	1100	400	500	135
4BMHD -3/3			3	620	303	876	561	315	250	415				1100	400	500	167
4BMHD -4/4			4	680	363	961	621	340	250	438				1100	400	500	189
4BMHD -5/5,5			5	740	423	1066	681	385	300	468				1100	400	500	194
4BMHD -6/7,5			6	887	483	1166	741	425	300	468				1400	500	500	218

BMV-4BMV Serie-Mechanical seal and bearings

MECHANICAL SEAL	PUMP MODEL	SHAFT		STANDARD MATERIAL	OPTIONAL
	BMVA-3/5,5 | BMVB-2/7,5 | 4BMVA-8/2,2| 4BMVB-4/2,2 | 4BMVB-5/2,2 | 4BMVB-6/3 | 4BMVB-8/4	25mm	***Rotating face*** ***Stationary face*** ***Elastomer***	Ceramic Graphite NBR	Widia Widia NBR
	BMVC-2R1/11 | BMVD-2/15 | 4BMVC-3/2,2 | 4BMVC-4/3 | 4BMVC-5/4 | 4BMVC-6/5,5 | 4BMVD-2/2,2 | 4BMVD-3/3 | 4BMVD-4/4 | 4BMVD-5/5,5 | 4BMVD-6/7,5	35mm	***Rotating face*** ***Stationary face*** ***Elastomer***	Ceramic Graphite NBR	Widia Widia NBR
	BMVA-4/7,5 | BMVA-5/9,2 | BMVA-6/11 | BMVA-8/15 | BMVB-3R/9,2 | BMVB-3/11 | BMVB-4/15 | BMVB-5/18,5 | BMVB-6/22	25mm / Balanced seal	***Rotating face*** ***Stationary face*** ***Elastomer***	Widia Graphite NBR	Widia Widia NBR
	BMVC-3R/15 | BMVC-3/18,5 | BMVC-4R1/22 | BMVC-5/30 | BMVC-6/37 | BMVD-3R/18,5 | BMVD-3/22 | BMVD-4/30 | BMVD-5/37	35mm / Balanced seal	***Rotating face*** ***Stationary face*** ***Elastomer***	Widia Graphite NBR	Widia Widia NBR

BEARINGS	PUMP MODEL	TYPE	
	4BMVA-8/2,2 | 4BMVB-4/2,2 | 4BMVB-5/2,2 | 4BMVC-3/2,2 | 4BMVD-2/2,2	6205-ZZ C3	6205-ZZ C3
	4BMVB-6/3 | 4BMVB-8/4 | 4BMVC-4/3 | 4BMVC-5/4 | 4BMVD-3/3 | 4BMVD-4/4	6206-ZZ C3	6206-ZZ C3
	BMVA-3/5,5-132S | BMVA-4/7,5-132S | BMVA-5/9,2-132M | BMVA-6/11-132M | BMVB-2/7,5-132S | BMVB-3R/9,2-132M | BMVB-3/11-132M | BMVC-2R1/11-132M	6206-ZZ C3	6308-ZZ C3
	4BMVC-6/5,5-132S | 4BMVD-5/5,5-132S | 4BMVD-6/7,5-132S	6208-ZZ C3	6208-ZZ C3
	BMVA-8/15-160M | BMVB-4/15-160M | BMVB-5/18,5-160L | BMVB-6/22-160L | BMVC-3R/15-160M | BMVC-3/18,5-160L | BMVC-4R1/22-160L | BMVD-2/15-160M | BMVD-3R/18,5-160L | BMVD-3/22-160L	6308-ZZ C3	6309-ZZ C3
	BMVC-5/30-180M | BMVC-6/37-180L | BMVD-4/30-180M | BMVD-5/37-180L	6309-ZZ C3	3310-ZZ C3

BMH-4BMH Serie-Mechanical seal and bearings

MECHANICAL SEAL	PUMP MODEL	SHAFT		STANDARD MATERIAL	OPTIONAL
	BMHA-3/5,5 | BMHB-2/7,5 | 4BMHA-8/2,2| 4BMHB-4/2,2 | 4BMHB-5/2,2 | 4BMHB-6/3 | 4BMHB-8/4	25mm	***Rotating face*** ***Stationary face*** ***Elastomer***	Ceramic Graphite NBR	Widia Widia NBR
	BMHC-2R1/11 | BMHD-2/15 | 4BMHC-3/2,2 | 4BMHC-4/3 | 4BMHC-5/4 | 4BMHC-6/5,5 | 4BMHD-2/2,2 | 4BMHD-3/3 | 4BMHD-4/4 | 4BMHD-5/5,5 | 4BMHD-6/7,5	35mm	***Rotating face*** ***Stationary face*** ***Elastomer***	Ceramic Graphite NBR	Widia Widia NBR
	BMHA-4/7,5 | BMHA-5/9,2 | BMHA-6/11 | BMHA-8/15 | BMHB-3R/9,2 | BMHB-3/11 | BMHB-4/15 | BMHB-5/18,5 | BMHB-6/22	25mm / Balanced seal	***Rotating face*** ***Stationary face*** ***Elastomer***	Widia Graphite NBR	Widia Widia NBR
	BMHC-3R/15 | BMHC-3/18,5 | BMHC-4R1/22 | BMHC-5/30 | BMHC-6/37 | BMHD-3R/18,5 | BMHD-3/22 | BMHD-4/30 | BMHD-5/37	35mm / Balanced seal	***Rotating face*** ***Stationary face*** ***Elastomer***	Widia Graphite NBR	Widia Widia NBR

BEARINGS	PUMP MODEL	TYPE	
	4BMHA-8/2,2 | 4BMHB-4/2,2 | 4BMHB-5/2,2 | 4BMHC-3/2,2 | 4BMHD-2/2,2	6205-ZZ C3	6205-ZZ C3
	4BMHB-6/3 | 4BMHB-8/4 | 4BMHC-4/3 | 4BMHC-5/4 | 4BMHD-3/3 | 4BMHD-4/4	6206-ZZ C3	6206-ZZ C3
	BMHA-3/5,5-132S | BMHA-4/7,5-132S | BMHA-5/9,2-132M | BMHA-6/11-132M | BMHB-2/7,5-132S | BMHB-3R/9,2-132M | BMHB-3/11-132M | BMHC-2R1/11-132M	6206-ZZ C3	6308-ZZ C3
	4BMHC-6/5,5-132S | 4BMHD-5/5,5-132S | 4BMHD-6/7,5-132S	6208-ZZ C3	6208-ZZ C3
	BMHA-8/15-160M | BMHB-4/15-160M | BMHB-5/18,5-160L | BMHB-6/22-160L | BMHC-3R/15-160M | BMHC-3/18,5-160L | BMHC-4R1/22-160L | BMHD-2/15-160M | BMHD-3R/18,5-160L | BMHD-3/22-160L	6308-ZZ C3	6309-ZZ C3
	BMHC-5/30-180M | BMHC-6/37-180L | BMHD-4/30-180M | BMHD-5/37-180L	6309-ZZ C3	3310-ZZ C3

HP SERIES

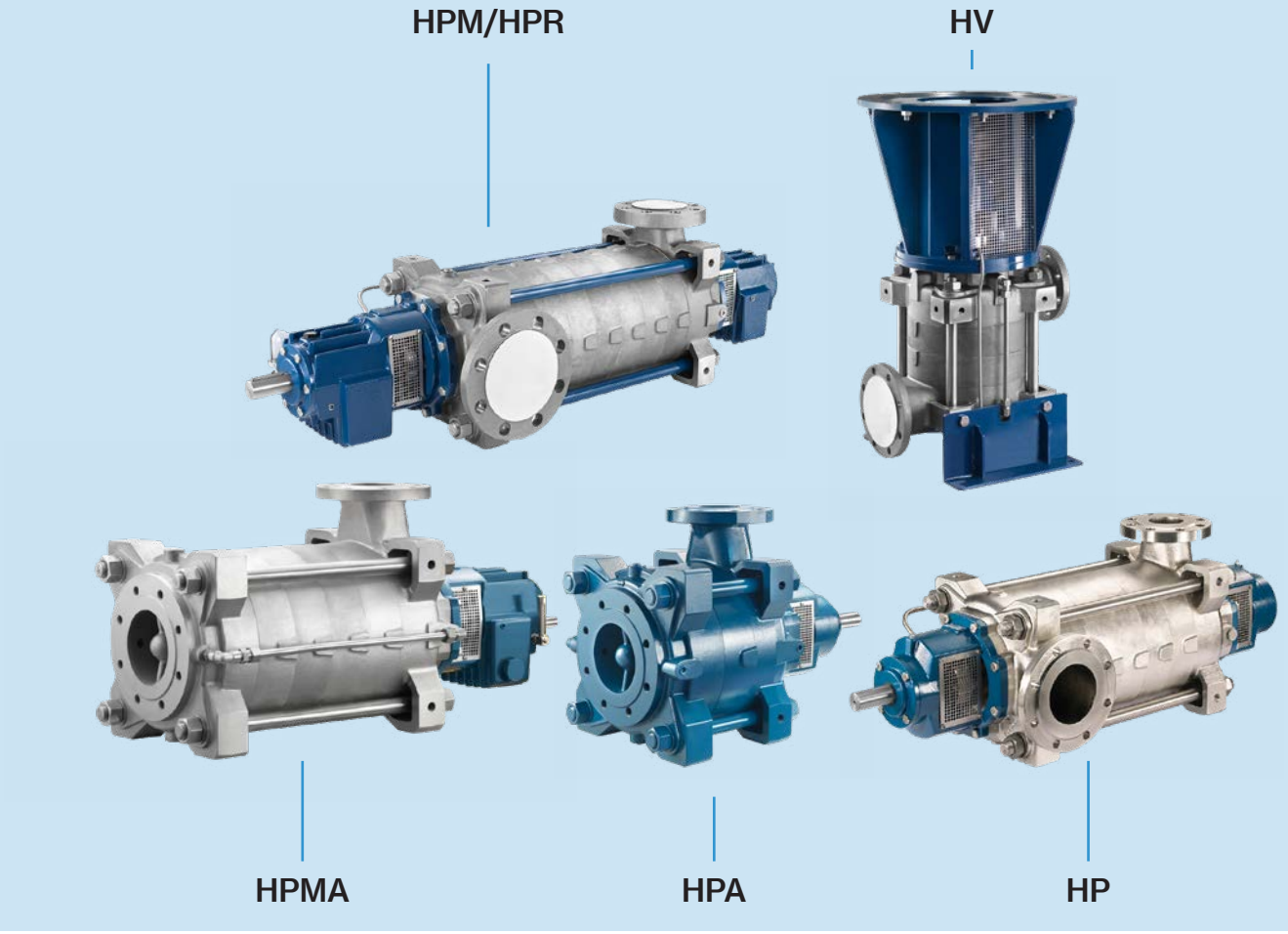

The multistage centrifugal pumps belonging to the HP series have a radial cross section, allowing an horizontal or vertical installation. The flanges of the suction and discharge ports are according to the EN or ANSI standards, these ports can operate radially and can be rotated 90°, in the HP, HPM and HPR models, or have an axial suction port for the HPA and HPMA models. This family of pumps is designed to operate in heavy duty conditions and with very high pressures (up to 100 Bar for the HPR versions) and with temperatures up to 180°C. The great choice of materials, the different kinds of sealing on the shaft and the various lubrication solutions for the pump's bearings, make this line very versatile and ideal for many uses in the industrial, energy and water processing fields.

Applications:

- Boiler feeding
- Water desalination by Reverse Osmosis
- Geothermal plants
- Service installations in the petrochemical sector

PERFORMANCE RANGE

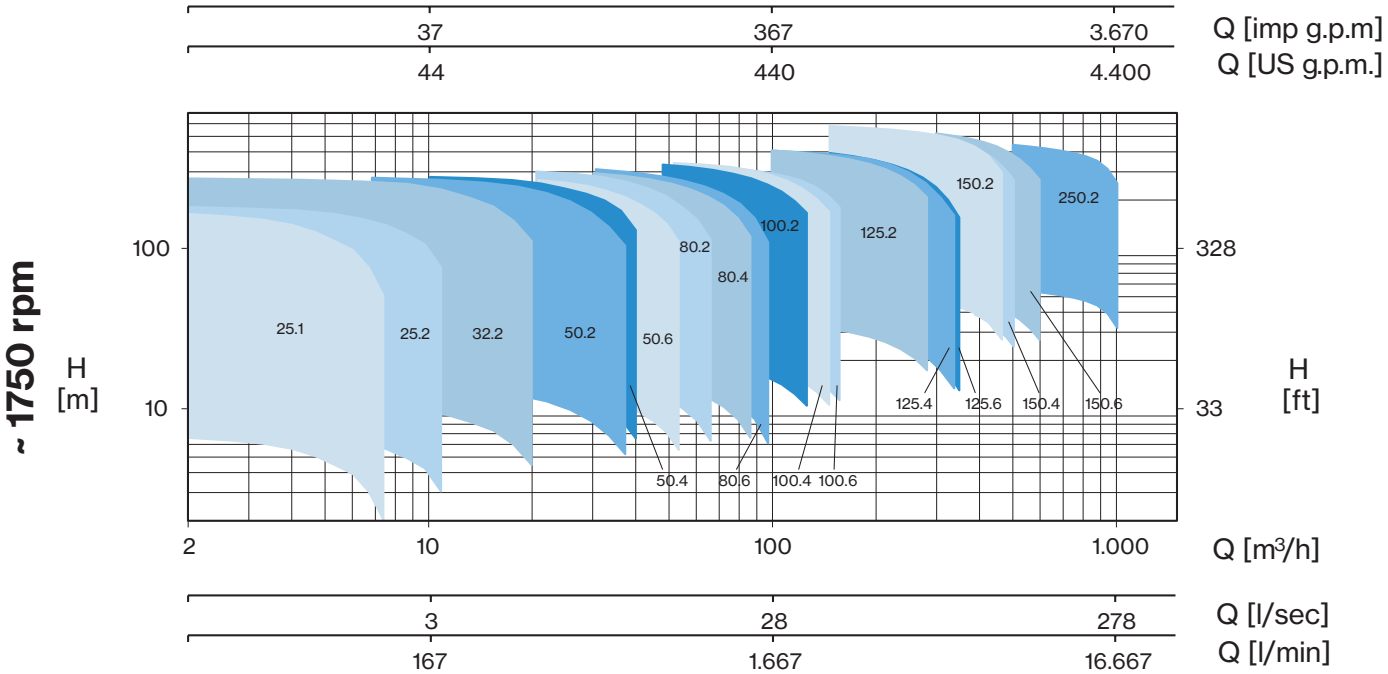

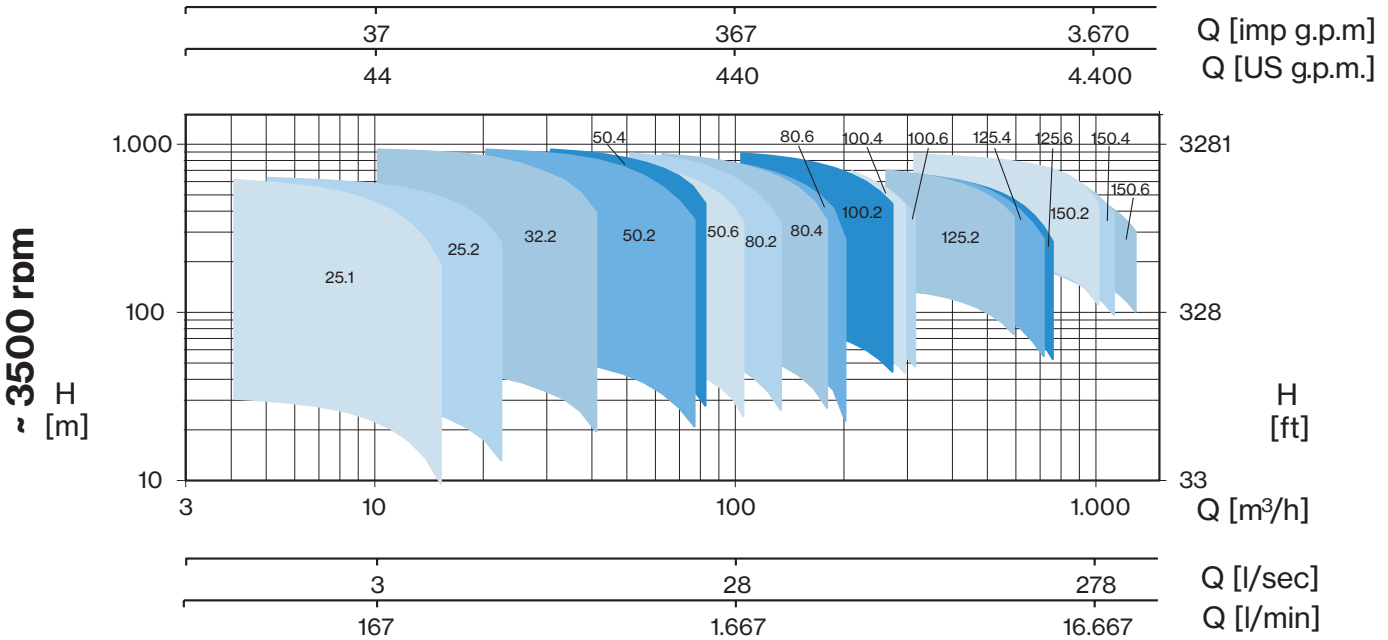

Contact our Sales Department for the complete catalogue

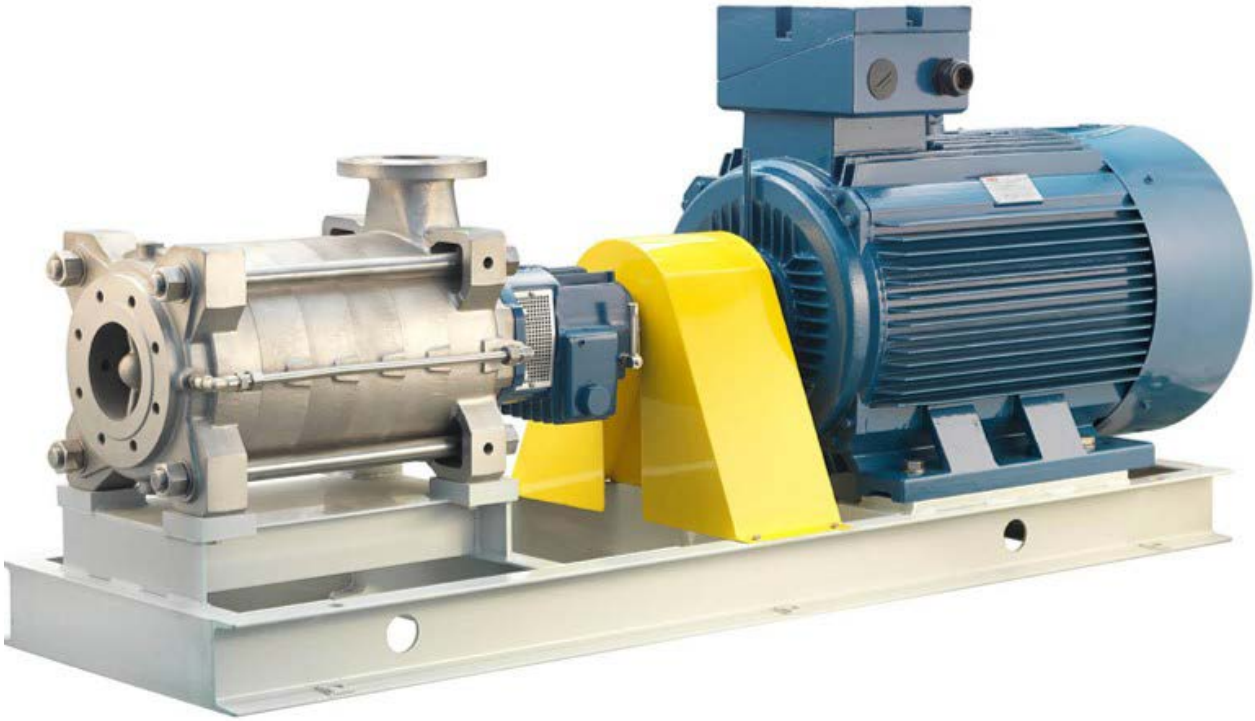

Main characteristics

- Flow rates up to 1200 m³/h
- Pressure up to 1000 m
- High hydraulic efficiency, up to 80%
- Balancing drum, placed on the discharge casing, which effectively compensates the axial thrust produced by the impellers
- Versatile sealing system: which is available as packing, single Mechanical or Balanced Mechanical, other special types upon request
- The pumps' bearings are available with grease or oil lubrication in order to assure a long operating life
- Wear rings: they are available both fixed as well as rotating, in various materials, with hardening treatments

General function data

- Pressure up to 100 bar
- Temperatures from -20°C to +180°C
- Rotational speed up to 3600 rpm.
- Standard flanges: UNI/EN
- Suction port: DN 40-300 - PN 16-25
- Discharge port: DN 25-250 - PN 64-100
- Performance tolerances: ISO9906-3B

PSC

Horizontal axial split case single stage centrifugal pumps with in-line inlet and outlet. The double suction impeller design provides hydraulic balance to enhance bearing life span.

Construction features	
Flow rate	up to 4000 m3/h
Pressure	up to 180 m
Temperature	from -10 °C to +110 °C
Rotation	1750 - 3500 r.p.m.
Standard flanges	conform to EN 1092-2/ PN 16 or PN 25
Discharge port	DN65-350 PN 16-25
Bearing lubrification	grease
Sealing	gland packing; also available with mechanical seal
Impeller, casing and wear rings	cast iron, also available in bronze or stainless steel
Performance tolerance	ISO 9906-3B

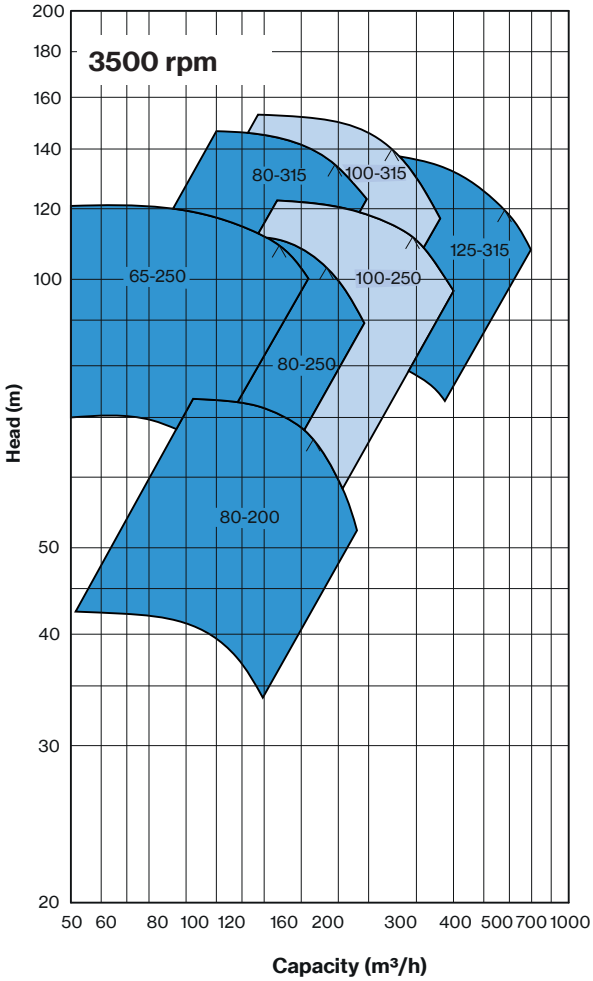
3500 rpm
Head (m)
Capacity (m³/h)
200
180
160
140
120
100
50
40
30
20
50 60 80 100 120 160 200 300 400 500 700 1000
80-315
100-315
125-315
65-250
100-250
80-250
80-200

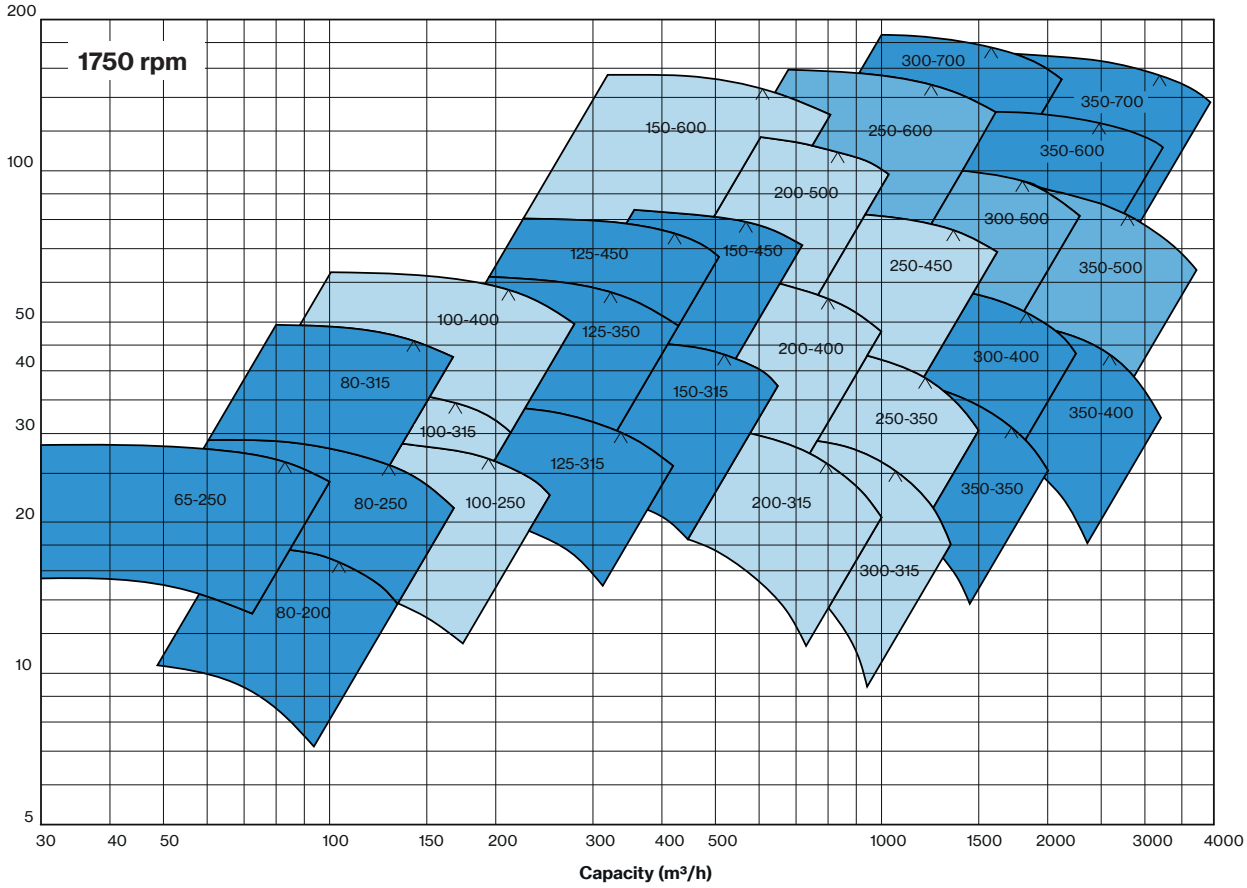
1750 rpm
Capacity (m³/h)
200
100
50
40
30
20
10
5
30 40 50 100 150 200 300 400 500 1000 1500 2000 3000 4000
300-700
350-700
150-600
250-600
350-600
200-500
300-500
125-450
150-450
250-450
350-500
100-400
125-350
200-400
300-400
80-315
150-315
250-350
350-400
100-315
125-315
65-250
80-250
100-250
200-315
350-350
300-315
80-200

PSC

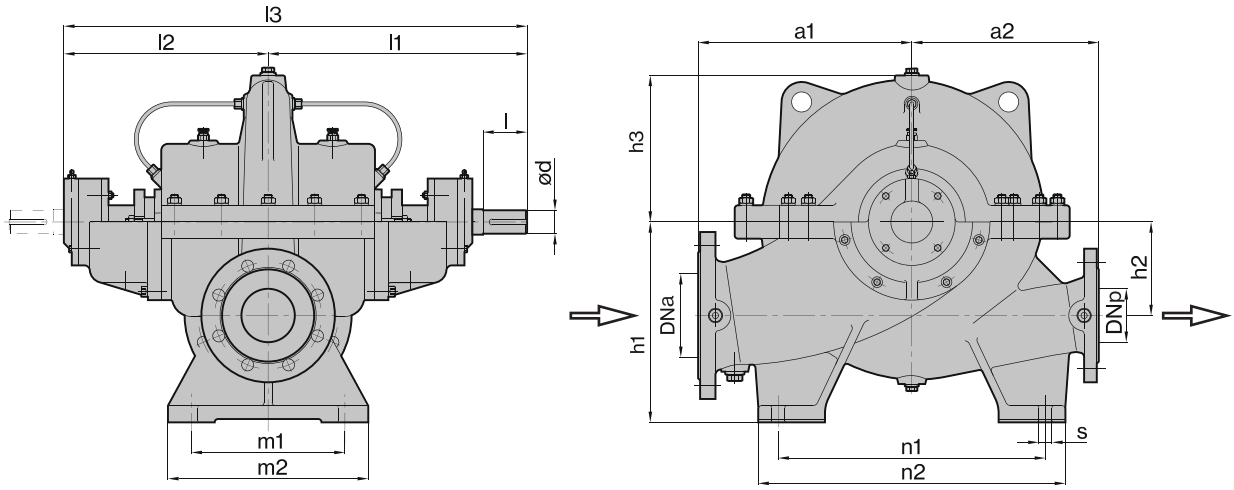

TYPE	DIMENSIONS (mm)																			Kg
	PNa	PNp	DNa	DNp	ød	l	l1	l2	l3	a1	a2	h1	h2	h3	n1	n2	m1	m2	s	
65-250	16	16	100	65	35	80	400	310	710	320	280	300	140	200	400	460	230	300	20	165
80-200	16	16	125	80	35	80	400	310	710	320	280	300	140	200	400	460	230	300	20	165
80-250	16	16	125	80	35	80	400	310	710	320	280	300	140	200	400	460	230	300	20	175
80-315	16	16	125	80	35	80	400	310	710	360	300	300	140	260	400	460	230	300	20	197
100-250	16	16	150	100	42	90	450	350	800	360	310	355	170	235	400	480	280	340	20	220
100-315	16	16	150	100	42	90	450	350	800	360	310	355	170	250	400	480	280	340	20	230
100-400	16	16	150	100	42	90	450	350	800	420	370	355	170	300	460	540	280	340	20	290
125-315	16	16	200	125	55	120	555	420	975	420	370	400	200	280	460	540	320	380	22	330
125-350	16	16	200	125	55	120	555	420	975	470	450	400	200	300	540	660	320	380	22	380
125-450	16	16	200	125	55	120	555	420	975	500	450	400	200	350	540	640	320	380	22	410
150-315	16	16	200	150	55	120	555	420	975	470	400	400	200	310	540	640	320	380	22	395
150-450	16	16	200	150	55	120	555	420	975	500	450	400	200	365	540	640	320	380	22	430
150-600	25	25	250	150	65	130	645	500	1145	550	500	560	300	445	540	640	360	420	22	800
200-315	16	16	250	200	65	130	645	500	1145	500	450	500	240	315	540	640	360	420	22	570
200-400	16	16	250	200	65	130	645	500	1145	500	450	500	240	360	540	640	360	420	22	575
200-500	16	16	250	200	65	130	645	500	1145	550	500	560	300	380	620	720	360	420	22	700
250-350	16	16	300	250	65	130	645	500	1145	600	500	600	300	390	620	720	360	420	22	682
250-450	16	16	300	250	65	130	645	500	1145	600	500	600	300	415	620	720	360	420	22	780
250-600	25	25	300	250	80	170	720	540	1260	650	550	600	300	430	620	710	415	485	26	1190
300-315	16	16	350	300	65	130	645	500	1145	600	500	630	300	400	620	700	360	420	22	700
300-400	16	16	400	300	75	140	770	615	1385	700	550	710	350	450	720	800	420	520	26	1125
300-500	16	16	400	300	85	170	755	585	1340	700	750	710	350	425	700	800	420	520	26	1500
300-700	25	25	400	300	100	180	865	675	1540	750	800	710	350	470	720	880	420	520	26	1650
350-350	16	16	400	350	75	140	770	615	1385	700	550	670	350	450	720	800	420	520	26	1100
350-400	16	16	500	350	75	140	770	615	1385	800	600	800	380	500	800	960	500	600	26	1400
350-500	16	16	500	350	80	170	755	585	1340	800	600	800	400	435	740	900	500	600	26	1435
350-600	25	25	500	350	80	170	825	650	1475	800	600	800	400	510	800	900	500	600	26	1435
350-700	25	25	500	350	100	180	865	675	1540	850	750	850	450	525	720	880	500	600	26	2000

VP SERIES

VP

Vertical lineshaft pumps with submerged pump bowl specifically developed for the industrial sectors, irrigation, waterworks and fire-fighting systems. Extremely versatile for the use in areas not served by electricity, as emergency or back-up units. Available in different materials and versions with drive head and electric motor or gear box for diesel engine.

Applications:

- Pumping units for fire-fighting systems
- Aqueducts
- Condensate extraction in power plants
- Geothermal plants
- Water treatment on Reverse Osmosis plants

PERFORMANCE RANGE

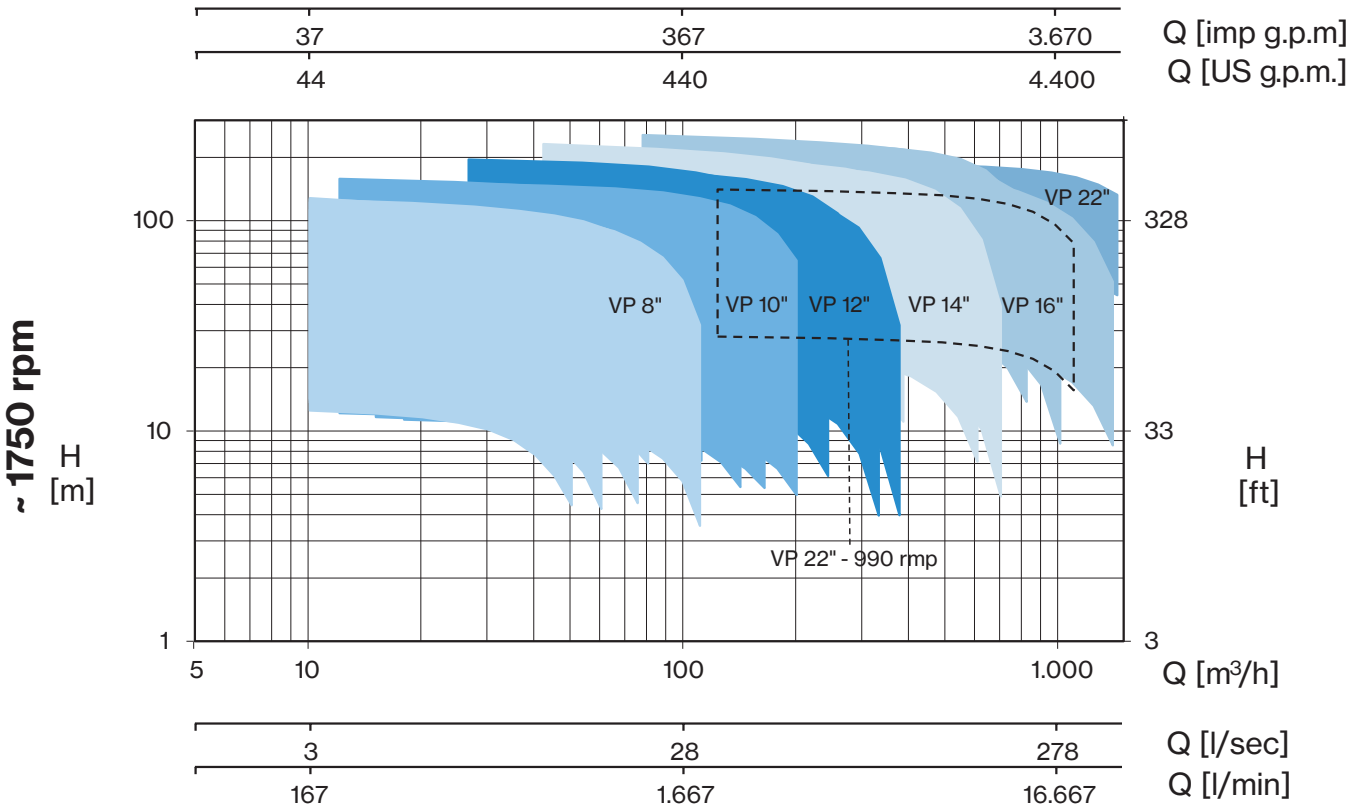

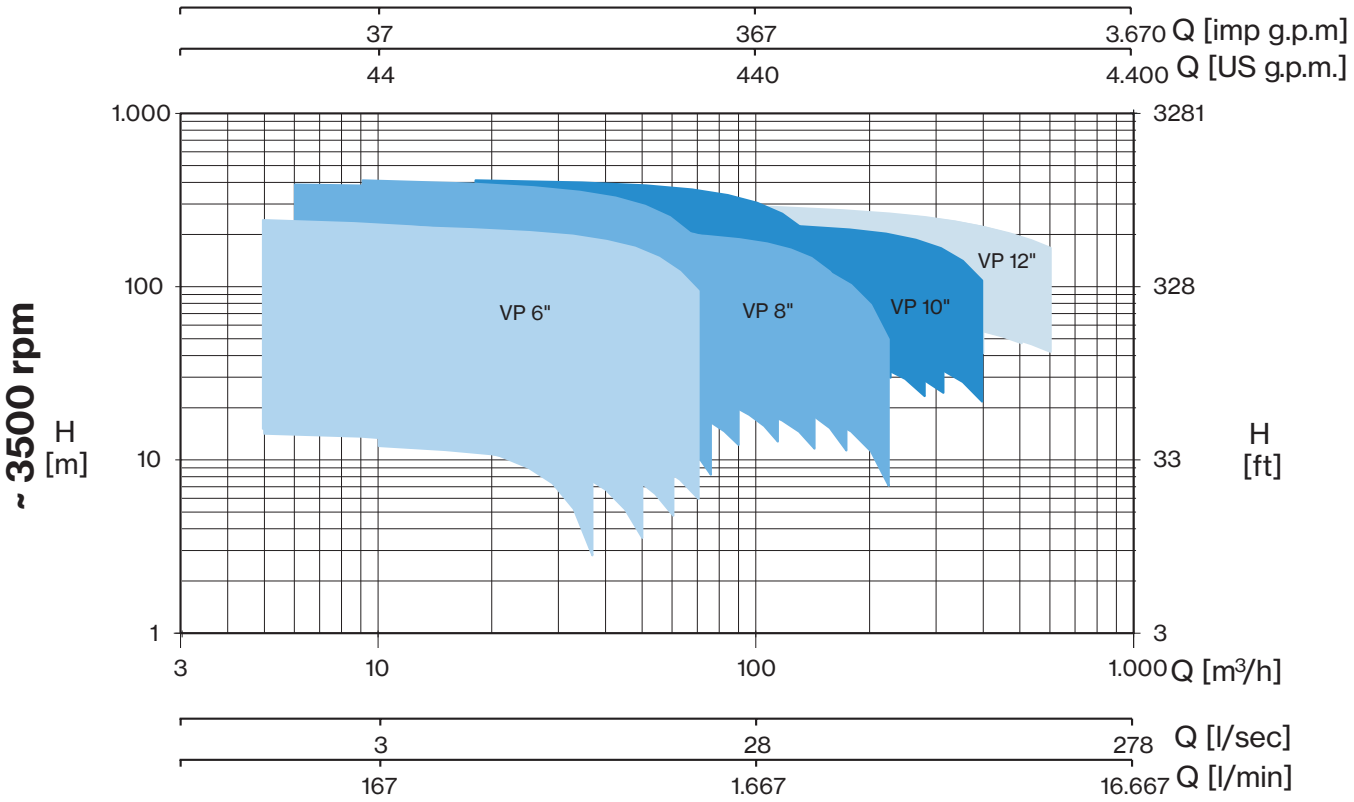

Main characteristics

- Capacity up to 1600 m3/h.
- Pressure up to 400 m.
- High hydraulic efficiency, up to 82%
- Thrust bearing (grease or oil with optional external cooling) for use of standard motors.
- Axis lines with tapered joints for reliable and durable connection of the shaft.
- Special bushings resistant to the wear of abrasive liquids and temperatures up to 140°C.
- Control unit for electric motor, transmission angle on request.
- AISI 420 stainless steel shaft for standard versions.
- The pump part of VPL models is produced in the standard execution in AISI 304 stainless steel.
- The pump part of VP models is produced in the standard execution in cast iron.

Technical operational specifics for standard versions

- All the hydraulic performance values below are guaranteed in accordance with standard ISO 9906-Grade 3B.
- The allowable content of solids in the pumped liquid is 100 g/m3.
- All the components wetted with liquid are available in various types of steel and bronze alloy.

Foras®

WATER PUMPS

ACCESSORIES

ELECTRONIC FLOW CONTROL

SERVOPRESS S2

- Complete replacement of the traditional water system set consisting on pressure switch and pressure tank
- Control the starting of the electric pump after a pressure decrease (taps opening) and stopping when the fluid flow interrupt at the maximum pressure level of the electric pumps (taps closing)
- Protection against dry running
- Starting pressure adjustable during the installation
- Standard 1"M hydraulic connections
- Installation in any position - both vertical and horizontal according to the flow direction
- Easily replaceable electronic printed circuit board
- No need of maintenance

TECHNICAL DATA	
Power supply	110-230V ac ± 10% 50/60Hz
Max rated current	12 A
Starting pressure range	1 - 3,5 bar
Max pressure	10 bar
Protection degree	IP65
Max fluid temperature	55 °C
Max ambient temperature	55 °C

HIDROTANK H2

- Automatic start and stop operations of single-phases electric pumps up to 2 HP
- Replacement of the traditional water system set consisting on pressure switch and pressure tank
- Control the starting of the electric pump after a pressure decrease (taps opening) and stopping when the fluid flow interrupt at the maximum pressure level of the electric pumps (taps closing)
- Protection against dry running
- Starting pressure adjustable during the installation
- Standard 1"M hydraulic connections
- Installation in any position-both vertical and horizontal - according to the flow direction.
- Easily replaceable electronic printed circuit board
- No need of maintenance
- Thanks to the 0,4 lt. tank it protects from the frequent start-stop required by small request of water and from anylosses into the system
- Protection of the electronic board thanks to the new watertight compartment
- Protection from water-hammer
- New design and new concept
- Built in 0,4 lt. tank
- Built in pressure gauge
- Watertight electronic part

TECHNICAL DATA	
Power supply	230Vac ± 15% 50/60Hz
Max rated current	12 A (2HP) - 1500 W
Starting pressure range	1 ÷ 3,5 bar (1,5 bar factory setting)
Max pressure	10 bar
Protection degree	IP65
Fluid temperature	5°C ÷ 35 °C
Ambient temperature	5°C ÷ 45°C
Hydraulic connection	1" M

VARIABLE SPEED DRIVE

EPIC

EPIC is a single-phase variable speed drive for horizontal and vertical three-phase pumps, designed to maintain the set pressure and protect a pumping system against dry running, over/under voltage and overcurrent.
It is possible to realize a booster set up to 2 pumps in parallel, using 2 EPIC connected together.

- Constant pressure control
- Easy initial configuration
- Installed directly on motor terminal box of horizontal or vertical pumps
- Soft start and soft stop
- Alternance for uniform pump wearing when connected to another EPIC
- Protection against dry running (adjustable power factor cosφ), overload, overcurrent
- Automatic restart in case of stop for dry running
- Fuse for input protection of the device
- Led indicator for standby, run and alarm conditions
- Compatibility for residential environment thanks to an integrated electronic power factor corrector in compliance to EN61000-3-2
- 2 digital inputs (N.O. or N.C.) for motor run/stop
- 2 analog inputs: 4-20 mA and 0-10 VDC
- 1 digital output (N.O. or N.C.) for alarm signal

Input rated voltage	Output rated voltage	Output rated current	Max electric pump current	Weight
1 × 220 V	3 × 220 V	7,5 A	6,8 A	2,5 Kg

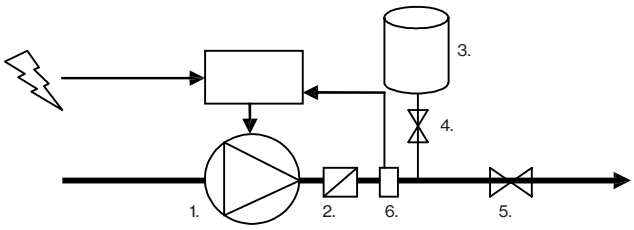

1. Pump
2. Non return valve
3. Pressure tank *(Volume suggested: 10% of the pump flow rate)*
4. Valve-Tap
5. Valve
6. Pressure sensor

VSD	TYPE	max nominal power P2	
		HP	kW
EPIC (1~ V-in 3~ V-out)	**JA-JAM, JA 150-300, KBJ, KM, SD 2", KB**	2	1,5
	JXF, SE	1,5	1,1
	JXM	1,2	0,88
	P 3, P 3S, P 3V, P 3L, P 3SV, P 3SL	2,5	1,85
	P 5, P 5S, P 5V, P 5L, P 5SV, P 5SL, P 9, P 9S	1,8	1,3
	P 7, P 7S	2,5	1,84

VARIABLE SPEED DRIVE

EPIC-A (Advanced) is a three-phase variable speed drive for horizontal and vertical three-phase pumps designed to maintain the set pressure and protect pumping systems up to 8 pumps connected in parallel.

- Constant pressure control
- Easy initial configuration
- Simplified installation on motor terminal box of horizontal or vertical pumps
- Soft start and soft stop
- Alternance for uniform pump wearing when connected to others EPIC-A
- Built-in protections against overvoltage and undervoltage, overcurrent and no load, dry running, overtemperature
- Led indicator for standby, run and alarm conditions
- Compatibility for residential environment thanks to an integrated electronic power factor corrector in compliance to EN61000-3-2
- Integrated input filter for category C2 (EN61800-3), class A (EN55011)
- 4 digital inputs (N.O. or N.C.) for motor run/stop
- 4 analog inputs: two 4-20 mA and two 0-10 VDC
- 2 digital outputs (N.O. or N.C.) for alarm signal

EPIC-A	204	206	209
Installation	direct on-pump		
Input rated voltage	3 × 220 V ± 15%		
Output rated voltage	3 × 220 V		
Output rated current	4 A	6 A	9 A
Max electric pump current	3,6 A	5,4 A	8,1 A

EPIC-A	304	306	309
Installation	direct on-pump		
Input rated voltage	3 × 380 V ± 15%		
Output rated voltage	3 × 380 V		
Output rated current	4 A	6 A	9 A
Max electric pump current	3,6 A	5,4 A	8,1 A

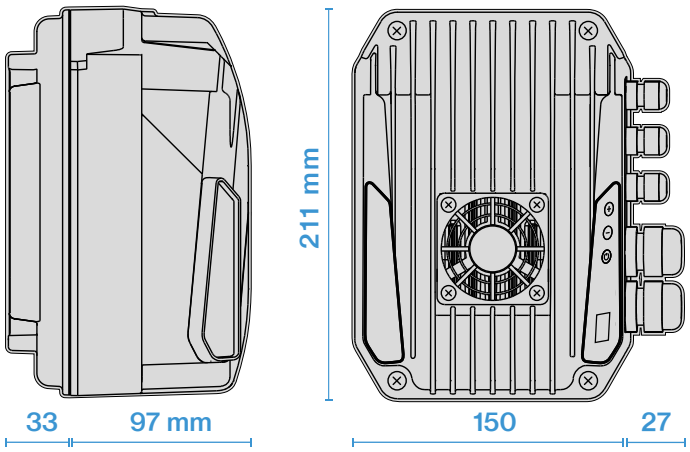

max weight 2,5 kg

VARIABLE SPEED DRIVE

IPFC 109-209
IPFC 306-311

IPFC 214-230
IPFC 314-330

IPFC 228-285
IPFC 338-385

IPFC is a variable speed drive for vertical pumps designed to control and protect pumping systems up to 8 pumps connected in parallel.
IPFC maintains the set pressure ensuring energy savings and extended lifespan of the system.

- Constant pressure control
- Energy and cost saving
- Protection against overload and dry running
- Greater reliability and longevity of pumping system
- Installed directly on the motor fan cover of vertical pumps
- Indication of input current and supply voltage
- Soft start and soft stop
- Recording running hours and loggings errors and alarms reported by the system
- Connect to other devices to get combined operation with cascade control and pump alteration
- OLED display
- Settable digital outputs, N.O. or N.C.
- Protection and analog/digital inputs

IPFC	306	309	311	314	318	325	330	338	348	365	375	385
Input rated voltage (V)	3 × 380 ± 15%											
Output rated voltage (V)	3 × 380											
Output rated current (A)	(3~) 6	(3~) 9	(3~) 11	(3~) 14	(3~) 18	(3~) 25	(3~) 30	(3~) 38	(3~) 48	(3~) 65	(3~) 75	(3~) 85
Output rated power (kW)	(3~) 2,2	(3~) 4	(3~) 4	(3~) 5,5	(3~) 7,5	(3~) 11	(3~) 15	(3~) 18,5	(3~) 22	(3~) 30	(3~) 37	(3~) 45
Max electric pump current (A)	(3~) 5,4	(3~) 8,1	(3~) 9,9	(3~) 12,6	(3~) 16,2	(3~) 22,5	(3~) 27	(3~) 34,2	(3~) 43,2	(3~) 58,5	(3~) 67,5	(3~) 76,5
Input frequency (Hz)	60											
PWM frequency (kHz)	2,5 - 4 - 6 - 8 - 10 - 12											
Control panel	backlight LCD with 2 x 16 characters and buzer / Bluetooth ® SMART 4,0											
Input analogical signals (mA)	no.4 4-20											
Input digital signals	no.2											
Comunication	RS485 / Bluetooth SMART 4,0											
2 DOL auxiliary pump contacts	clean, N.O., 220 V, Imax, 6 A											
Cooling	auxiliar built-in cooling fan /mot fan											
Protection degree	IP55 (IP54 for IPFC 338 < > IPFC 385)											
Assembly	on motor fan cover with kit / hanged on wall with kit							on motor feet / hanged on wall with kit				
Max ambient temperature (C)	40° C											
Max ambient altitude	1.000 m slm / de-rate 2% each 100 m											
Input / Output feeding cable	2 × PG 13,5 + 3 x PG 9											
Dimension (mm)	205 × 205 × h180			260 × 260 × h180				410 × 260 × h680				

IPFC V. 220 VSD

IPFC	109	114	206	209	214	218	225	230	238	248	265	275	285
Input rated voltage (V)	1 × 220 ± 15%		3 × 220 ± 15%										
Output rated voltage (V)	1 × 220 3 × 220		3 × 220										
Output rated current (A)	(1~) 9 (3~) 7	(1~) 9 (3~) 11	(3~) 6	(3~) 9	(3~) 14	(3~) 18	(3~) 25	(3~) 30	(3~) 38	(3~) 48~	(3~) 65	(3~) 75	(3~) 85
Output rated power (kW)	(1~) 1,1 (3~) 1,5	(1~) 1,1 (3~) 3	(3~) 1,1	(3~) 2,2	3 kW 3~	(3~) 4	(3~) 5,5	(3~) 7,5	(3~) 9,3	(3~) 11	(3~) 15	(3~) 18,5	(3~) 22
Max motor current (A)	(1~) 7,2 (3~) 6,3	(1~) 7,2 (3~) 9,9	(3~) 5,4	(3~) 8,1	(3~) 12,6	(3~) 16,2	(3~) 22,5	(3~) 27	(3~) 34,2	(3~) 43,2	(3~) 58,5	(3~) 67,5	(3~) 76,5
Input frequency (Hz)	60												
PWM frequency (kHz)	2,5 - 4 - 6 - 8 - 10 - 12												
Control panel	backlight LCD with 2 x 16 characters and buzer / Bluetooth ® SMART 4,0												
Input analogical signals (mA)	no.4 4-20												
Input digital signals	no.2												
Comunication	RS485 / Bluetooth SMART 4,0												
2 DOL auxiliary pump contacts	clean, N.O., 220 V, Imax, 6 A												
Cooling	Auxiliar built-in cooling fan /mot fan												
Protection degree	IP55 (IP54 for IPFC 338 < > IPFC 385)												
Assembly	on motor fan cover with kit / hanged on wall with kit						on motor feet / hanged on wall with kit						
Max ambient temperature (C)	40°												
Max ambient altitude	1000 m slm / de-rate 2% each 100 m												
Input / Output feeding cable	2 × PG 13,5 + 3 x PG 9												
Dimension (mm)	205 × 205 × h180				260 × 260 × h180				410 × 260 × h680				

SPD pressure transducer

TYPE	Output signal	Input voltage	Working pressure	Maximum pressure
SPD	4... 20 mA	9... 28 V	0 - 16 bar 0 - 25 bar	32 bar

PROTECTION/CONTROL PANEL

Legend

SERIES	ELECTRICITY SUPPLY		N. PUMPS			PUMP TYPE			POWER P2	SPEED		MOTOR STARTER				FEATURE		
	1~	3~	1	2	3	Borehole	Submersible	Surface	Kw	Fixed	Variable	DOL	Y/Δ	Soft start	Impedance start	Swicth with overload protection	Electromechanical control panel	Electronic control panel
PML	■	-	■	-	-	■	-	■	0,37 ÷ 2,2	■	-	■	-	-	-	■	-	-
PMLD	■	-	■	-	-	-	■	-	1,1 ÷ 1,5	■	-	■	-	-	-	■	-	-
PT		■	■	-	-	■	■	■	0,37 ÷ 15	■	-	■	-	-	-	■	-	-
EQSM	■	-	■	-	-	■	■	■	0,37 ÷ 2,2	■	-	■	-	-	-	-	-	■
EQSMT	-	■	■	-	-	■	■	■	0,55 ÷ 15	■	-	■	-	-	-	-	-	■
QST	-	■	■	-	-	■	■	■	4,5 ÷ 220	■	-	-	■	-	-	-	■	-
QSS	-	■	■	-	-	■	-	■	7,5 ÷ 220	■	-	-	-	■	-	-	■	-
QRS	-	■	■	-	-	■	-	-	4,5 ÷ 220	■	-	-	-	-	■	-	■	-
EQ2SM	■	-	-	■	-	■	■	■	0,37 ÷ 15	■	-	■	-	-	-	-	-	■
EQ2SMT	-	■	-	■	-	■	■	■	0,55 ÷ 15	■	-	■	-	-	-	-	-	■
Q2ST	-	■	-	■	-	■	■	■	4,5 ÷ 220	■	-		■	-	-	-	■	-
EQ3SM	■	-	-	-	■	■	■	■	0,37 ÷ 2,2	■	-	■	-	-	-	-	-	■
EQ3SMT	-	■	-	-	■	■	■	■	0,55 ÷ 15	■	-	■	-	-	-	-	-	■

Overload protection unit for 1 single-phase pump with run capacitor

PML 20÷40 PML 60

- Power supply 1x230V-50/60Hz
- Electrical switch
- Run capacitor
- Externally resettable thermal relay
- Illuminated 0-1 main switch
- IP55 rated thermoplastic enclosure
- Outputs with cable gland

TYPE	A	RUN CAPACITOR (μF)	POWER	
			HP	kW
PML 5/20-5	4,2	20	0,5	0,37
PML 7/25-7	6,6	25	0,75	0,55
PML 10/30-8	7,9	30	1	0,75
PML 15/35-12	11,2	35	1,5	1,1
PML 20/40-13	12,2	40	2	1,5
PML 30/60-18	17,1	60	3	2,2

PROTECTION/CONTROL PANEL

Overload protection unit for 1 single-phase pump with run capacitor + start capacitor with disjunctor

PMLD

- Power supply 1x230V-50/60Hz
- Electrical switch
- Run + start capacitor with disjunctor
- Externally resettable thermal relay
- Green illuminated main switch
- IP55 rated thermoplastic enclosure
- Outputs with cable gland

TYPE	A	RUN CAPACITOR (µF)	START CAPACITOR (µF)	POWER	
				HP	kW
PMLD 15-35-13	13	35	80	1,5	1,1
PMLD 20/50-15	15	50	80	2	1,5

Overload protection unit for 1 three-phase pump

PT

- Power supply 3x400V-50/60Hz
- ON/OFF switch
- Protective device with thermal relay for motor overload or phase failure
- Thermoplastic enclosure
- IP55 protection level

TYPE	A	POWER	
		HP	kW
PT 5/0,9-1,3	0,9-1,3	0,5	0,37
PT 7/1,3-2,1	1,3-2,1	0,75	0,55
PT 10/1,9-3	1,9-3	1	0,75
PT 15-20/2,9-4,5	2,9-4,5	1,5-2	1,1-1,5
PT 20-30-40/4,3-6,8	4,3-6,8	2-3-4	2,2-3
PT 40-50/5,7-9,1	5,7-9,1	4-5,5	3-4
PT 55-75/8,6-13,5	8,6-13,5	5,5-7,5	4-5,5
PT 100/12,5-16,5	12,5-16,5	10	7,5
PT 125-150-16-21	16-21	12,5-15	9,2-11
PT 200/22-29	22-29	20	15

Electronic control panel for 1-2-3 pumps with direct start-up

APPLICATIONS

- √ PRESSURISATION
- √ FILLING
- √ EMPTYNG
- √ DRAINAGE

EQSM

TYPE	VERSION	PUMPS N.	A	POWER		WEIGHT (Kg)
				HP	kW	
EQSM	1~	1	0-18	0,5-3	0,37-2,2	1,5
EQSMT 10	3~	1	0-18	0,75-10	0,55-7,5	2,3
EQSMT 15	3~	1	16-25	10-15	7,5-11	2,5
EQSMT 20	3~	1	16-32	15-20	11-15	3
EQ2SM	1~	2	0-18	0,5-3	0,37-2,2	1,5
EQ2SMT 10	3~	2	0-16	0,75-10	0,55-7,5	2,5
EQ2SMT 15	3~	2	16-25	10-15	7,5-11	3
EQ2SMT 20	3~	2	16-32	15-20	11-15	3,5
EQ3SM	1~	3	0-18	0,5-3	0,37-2,2	5
EQ3SMT 10	3~	3	0-18	0,75-10	0,55-7,5	15
EQ3SMT 15	3~	3	16-25	10-15	7,5-11	15
EQ3SMT 20	3~	3	16-32	15-20	11-15	15

- Single-phase version 100-240Vac 50/60Hz
- Three-phase version 310-450Vac 50/60Hz
- LCD display for voltage, current, power factor, hours of operation, number of starts, motor status, alarms, analogue signal and thresholds
- AUTOMATIC - 0 - MANUAL operation buttons
- Voltage and current minimum and maximum electronic control, failure or incorrect phase sequence control on power supply input
- Programmable anti-seize autotest
- Dry running protection through level probes/ floats/ pressure switches and minimum current
- Up to 6 control inputs: floats/pressure switches
- Input for 4-20 mA or 0-10V analogue signal
- Analogue signal cm - m - bar
- Emergency start and stop inputs with analogue signal
- Clickson thermal pad inputs with automatic reset
- Inversion of inputs (from normally open to normally closed)
- Activation delay from mains return
- Manual button operation (fixed or pulse)
- Programmable alarms for voltage, levels, motor overload, minimum motor current, clicson, output contacts, starts/hour
- Automatic reset for minimum current alarm with 4 programmable times
- Auxiliary and motor protection fuses, isolator protection, duty standby protection
- ABS box IP55. Metallic box IP55 for EQ3SMT
- Duty-standby and motor changeover in the case of a fault for two-pump and three-pump control panels
- Predisposition for capacitors for single-phase versions (capacitors are available separately)

CAPACITOR FOR EQSM

RUN CAPACITOR	POWER
	HP
20µF	0,5
25µF	0,75
35µF	1-1,5
40µF	1,5
50µF	2
80µF	3

RUN CAPACITOR + START CAPACITOR WITH DISJUNCTOR	POWER
	HP
35µF + 80µF	1,5
50µF + 80µF	2

PROTECTION/CONTROL PANEL

Star/delta control panel for 1 three-phase pump

QST

- Power supply 3x400V-50/60Hz
- 24V transformer for auxiliary circuit
- Low voltage inputs and circuits
- Blue mains supply LED
- Green motor running LED
- Red motor overload alarm LED
- Star/delta line contactors in AC3
- Auxiliary and motor protective devices with fuses
- Main door interlock switch disconnector
- ABS box up to 11kW, metal box from 15kW

TYPE	A	POWER	
		HP	kW
QST 5	13	5,5	4
QST 7	15	7,5	5,5
QST 10	17	10	7,5
QST 15	24	15	11
QST 20	31	20	15
QST 25	38	25	18,5
QST 30	50	30	22
QST 40	60	40	30
QST 50	75	50	37
QST 60	100	60	45
QST 75	124	75	55
QST 100	135	100	75
QST 125	155	125	92
QST 150	200	150	110
QST 180	241	180	132
QST 220	300	220	162
QST 300	410	300	220

Star/delta control panel for 2 three-phase pumps

Q2ST

- Power supply 3x400V-50/60Hz
- 24V transformer for auxiliary circuit
- Low voltage inputs and circuits
- Blue mains supply LED
- Green motor running LED
- Red motor overload alarm LED
- Star/delta line contactors in AC3
- Auxiliary and motor protective devices with fuses
- Main door interlock switch disconnector
- Metal box (whole range)

TYPE	A	POWER	
		HP	kW
Q2ST 3	8,5	3	2,2
Q2ST 5	13	5,5	4
Q2ST 7	15	7,5	5,5
Q2ST 10	17	10	7,5
Q2ST 15	24	15	11
Q2ST 20	31	20	15
Q2ST 25	38	25	18,5
Q2ST 30	50	30	22
Q2ST 40	60	40	30
Q2ST 50	75	50	37
Q2ST 60	100	60	45
Q2ST 75	124	75	55
Q2ST 100	135	100	75
Q2ST 125	155	125	92
Q2ST 150	200	150	110
Q2ST 180	241	180	132
Q2ST 220	300	220	162
Q2ST 300	410	300	220

Soft start control panel for 1 three-phase pump

QSS

- Power supply 3x400V-50/60Hz
- Blue mains supply LED
- Green motor running LED
- Red motor overload alarm LED
- NA input for start control
- Auxiliary motor protective devices with fuse
- Main door interlock switch disconnector
- Forced ventilation kit
- IP54 rated metal box
- Ambient temperature -5 ÷ +40°C

TYPE	A	POWER	
		HP	kW
QSS 10	18	10	7,5
QSS 15	25	15	11
QSS 20	30	20	15
QSS 25	37	25	18,5
QSS 30	45	30	22
QSS 40	60	40	30
QSS 50	72	50	37
QSS 60	85	60	45
QSS 75	105	75	55
QSS 80	125	80	59
QSS 100	142	100	75
QSS 125	170	125	92
QSS 150	210	150	110
QSS 180	250	180	132
QSS 220	300	220	162
QSS 300	370	300	220

Control panel with impedance start for 1 three-phase pump

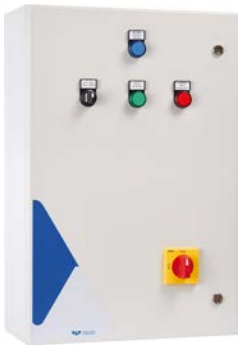

QRS

- Power supply 3x400V-50/60Hz
- Blue mains supply LED
- Green motor running LED
- Red motor overload alarm LED
- NA input for start control
- Stator reactance with 4 starts/hour, 2 of which are consecutive
- Adjustable reactance timer
- Line and impedance starter contactors in AC3
- Main door interlock switch disconnector
- Ambient temperature -5 ÷ +40°C

TYPE	A	POWER	
		HP	kW
QRS 5	13	5,5	4
QRS 7	16	7,5	5,5
QRS 10	20	10	7,5
QRS 15	29	15	11
QRS 20	35	20	15
QRS 25	52	25	18,5
QRS 30	63	30	22
QRS 40	80	40	30
QRS 50	90	50	37
QRS 60	110	60	45
QRS 75	135	75	55
QRS 90	150	90	66
QRS 100	175	100	75
QRS 125	200	125	92
QRS 150	235	150	110
QRS 180	310	180	132
QRS 220	360	220	162
QRS 300	410	300	220

TANKS

UTILIZATION
Interchangeable membrane expansion tanks; the pre-charge pressure in the tank guarantees a water reserve but also reduces the number of startups of the connected pump; the membranes are certified for use with foodstuffs; they may be in EPDM or butyl depending on the model.
CONSTRUCTION CHARACTERISTICS
Flanges in galvanised steel or AISI 304 stainless steel.
Tanks in carbon steel coated with powder paint or in AISI 304 stainless steel.
Pre-charge valve with protective cover.

TYPE	DESCRIPTION
AS 24	24 lt. Spherical tank
ACV 24	24 lt. Horizontal tank
ACZ 24	24 lt. Horizontal tank
ACA 24 SS	24 lt. Stainless steeel tank
AC 50	50 lt. Horizontal tank
AC 60	60 lt. Horizontal tank
AC 80	80 lt. Horizontal tank
AC 100	100 lt. Horizontal tank
AC 200	200 lt. Horizontal tank
AC 300	300 lt. Horizontal tank
AV 50	50 lt. Vertical tank
AV 60	60 lt. Vertical tank
AV 80	80 lt. Vertical tank
AV 100	100 lt. Vertical tank
AV 200	200 lt. Vertical tank
AV 300	300 lt. Vertical tank
AV 500	500 lt. Vertical tank
AV 750	750 lt. Vertical tank
AV 1000	1000 lt. Vertical tank

MEMBRANES

TYPE	DESCRIPTION
MZ 24	EPDM membrane for ACZ 24 lt.
M 24	membrane for AS 24 - ACV 24
M 50	membrane for AC 50 - AV 50
M 100	membrane for AC 100 - AV 100
M 200	membrane for AC 200 - AV 200
M 300	membrane for AC 300 - AV 300
M 500	membrane for AV 500
M 750 - 2000	membrane for AV 750 - AV 2000

PRESSURE SWITCHES

TYPE	DESCRIPTION	RANGE AT RISING PRESSURE (bar)
PP5	1~ / 3~	1-5
PP12	1~ / 3~	3-12

PRESSURE GAUGES

TYPE	PHASE
PR 6	0-6 bar rear connection
PR 6 R	0-6 bar radial connection
PR 12	0-12 bar rear connection
PR 10 G	0-10 bar glycerine
PR 12 G	0-12 bar glycerine

FLEXIBLE HOSES

TYPE	DESCRIPTION
FL 530	Flexible hose with bend 1”x530x1”
FL 600	Flexible hose with bend 1”x600x1”
FL 700	Flexible hose with bend 1”x700x1”
FL 850	Flexible hose with bend 1”x850x1”

CONNECTORS

TYPE	DESCRIPTION
R3	3 way 1” brass connector
R5	5 way 1” brass connector

TYPE	DESCRIPTION
R5X 1”	5 way 1” Aisi 304 connector with built-in no return valve
R5X 1”1/4	5 way 1” ¼ Aisi 304 connector with built-in no return valve
R5X 1”1/2	5 way 1” ½ Aisi 304 connector with built-in no return valve

VALVES

TYPE	DESCRIPTION
VF 1”	foot valve 1”
VF 1” ¼	foot valve 1” ¼
VF 1”½	foot valve 1” ½
VF 2”	foot valve 1” ½
VR1”	check valve 1”
VR 1”¼	check valve 1” ¼
VR 1”½	check valve 1” ½
VR 2”	check valve 1”

FLOAT SWITCHES

TYPE	DESCRIPTION
GK 2	2 mt. cable length
GK 3	3 mt. cable length
GK 5	5 mt. cable length
GK 10	10 mt. cable length
GAS 5	5 mt. cable length, for wastewater
GAS 10	10 mt. cable length, for wastewater
GAS 20	20 mt. cable length, for wastewater

CABLES JOINTS

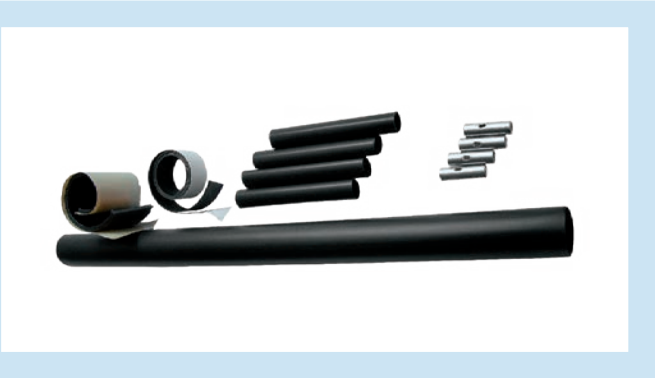

Kit GC series
Junction cable kit with heat - shrinkable tubing.
For a professionally made junction it is recommended to use the “Kit GC”, it has excellent requirements in terms of electric, mechanical and water resistance. This kit is composed of: crimp wire connectors in tinplated copper, thin wall heat-shrinkable tubing to cover the conductor of the cable, a strip of Scotch 2547, one of Scotchfil and medium wall heat-shrinkable tubing to cover the junction. It is recommended to seal the two end points of the sheath with a PVC textured insulating tape.

TYPE	Cables section mm²	Cable number
Kit GC 4/2,5	1/2,5	4
Kit GC 4/6	4/6	4
Kit GC 4/10	10	4
Kit GC 4/16	16	4
Kit GC 4/25	25	4
Kit GC 4/35	35	4
Kit GC 4/50	50	4
Kit GC 1/50	50	1
Kit GC 1/70	70	1
Kit GC 1/95	95	1
Kit GC 1/120	120	1
Kit GC 1/150	150	1

LEVEL PROBES

Kit K3SL series
Level Probes Kit consist of 3 electrodes model K3SL.
Single pole probe used for level control in wells or storage tanks.
It made of an AISI 303 stainless steel electrode, a plastic (PPOX) holder and a cable gland.
A seal ring and the tightening of the cable gland PG7 prevent water from entering the cable terminal connector and causing its oxidation.
Cable connection: screw.
The external cable diameter must be 2.5 to 6mm/Ø0.1 to 0.24” to warrant perfect sealing.

Maximum connection cable section: 2.5mm2.
Maximum operating temperature: +60°C.

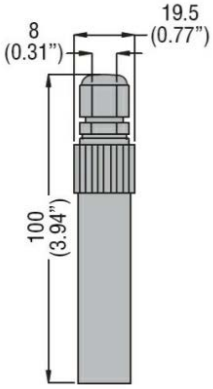

GENERAL SALES CONDITIONS

ART. 1 - DEFINITIONS

For the purpose of this Contract, the following expressions shall bear the respective meaning set forth below:

a) Seller/Producer: means "PENTAX INDUSTRIES S.P.A.";

b) Purchaser: means "natural or legal person who purchases the Seller's goods in business activities";

c) Product/s or Good/s: means "standard product and products which are personalized for the Purchaser, produced and/or sold by the Seller, such as: electric pumps, pumps, and accessories;"

d) Contract and/or General Sales Conditions: means "the present contract;

e) Orders or Request of quotation means "the written request from the Purchaser to buy the Products from the Seller";

f) Order Confirmation: means "the Order acceptance document from the Seller";

g) Party/Parties: means "Seller and/or Purchaser";

h) Technical assistance for installation of Products means "The Seller's assistance through its operators who will travel to the Site, to support the Purchaser's staff by transferring technical notions about ways to install the Products. The Operators will not provide the direct installation of the Products on the Site;

i) Site or Worksite: means "the place of installation of Products";

j) Operator/s: means "the owners of the company, employees and collaborator of the Seller who can go to the Site for Technical assistance for installation of Products.

k) Business day/Business days: means the days from Monday to Friday of each week, excluding Saturdays, Sundays, and public holidays as listed in the official calendar of national holidays in Italy, as well as any company closure days notified in writing by the Seller with at least 8 (eight) days' prior notice. If a contractual deadline falls on a day that is not considered a Business Day, such deadline shall be deemed extended to the next following Business Day.

l) Days: means calendar days, as opposed to Business Days as defined under letter k) above.

ART. 2 – CONTENT AND FORM OF THE CONTRACT

2.1 Replacement of previous agreements and application of present Contract to future sales. The present General Sales Conditions regulate the relationship between the Parties, replace any previous agreement or document signed and apply to all the purchases which will take place between the Parties even if not expressly referred to in subsequent reports, and prevail on the general Conditions of purchase of the Purchaser.

2.2 Modification of the General Sales Conditions. Every modification of the present General Sales conditions shall be expressly confirmed in writing by the Seller.

2.3 Binding Orders. Orders shall be considered binding only when:(i) they are accepted or confirmed in writing by the Seller's legal representative or by a person expressly authorized by the Seller, through the issuance of an Order Confirmation; and (ii) the Order Confirmation is signed by the Purchaser or, alternatively, if 2 (two) Business days have passed since its transmission to the Purchaser without any objections or responses being raised by the latter. The Order becomes irrevocable the moment the Seller has knowledge of it.

2.4 Refusal of Orders. Without prejudice to its own rights, the Seller reserves the right to refuse the Orders if not completed or to block the deliveries of the Products if the Purchaser does not carry out its obligations.

2.5 Modifications and suspension of Contract. If the Purchaser modifies or suspends the Contract, the Seller has the right to terminate the Contract and ask for damage compensation, or to increase the agreed price. It is understood that the Seller shall under no circumstances be obligated to reduce the previously agreed price.

2.6 Order Procedure. The Purchaser sends the Order or the Request of quotation to the Seller in writing. The Seller may send a quotation/offer and subsequently issue the Order confirmation.

2.7 Communication of Wrong Order Confirmations. Should the Purchaser find an error and/or omission of any kind in the Order confirmation, he shall within 2 (two) Business days communicate such circumstances to the Seller, to allow him to check the Order Confirmation and to make the necessary corrections or changes.

2.8. Modifications and improvement to the Products. The Seller reserves the right to modify the Products compared to what is outlined in the related offer and/or Order Confirmation, when such modifications are necessary and/or appropriate due to technical and/or production needs or are mandatory under applicable law governing the Contract, provided that they do not reduce and/or alter the performance and/or quality characteristics of the Products agreed upon between the Parties (by way of example and not limitation: variation of materials, accessories, finishes, color shades, etc.). In the event of modifications and/or improvements, the Seller commits to notifying the Purchaser, who shall not be entitled to terminate the Contract for such reasons.

2.9 Mandatory rules of country of Site. In case the country of the Site for the supply of the Products requests the enforcement of mandatory rules, the Purchaser shall be responsible for communicating to the Seller, the relevant regulations in English, before signing the Order Confirmation. Failure to communicate the above-mentioned regulations, the Purchaser shall not be liable in any way or for any reason for the non-compliance of such regulations.

ART. 3 – PAYMENT CONDITIONS

3.1 Price. The price of the Products shall be indicated in the Order Confirmation.

3.2. Currency. The amounts in the Confirmation Order shall be indicated by the Seller in Euro or in US Dollars (USD).

3.3 Payment conditions. The payment conditions shall be specified in the Order Confirmation, and the Purchaser undertakes to pay by the deadlines indicated in the Order Confirmation, or as otherwise agreed by the Parties.

3.4 Late Payments. If the payments are late, default interest is applied as indicated in D.Lgs 231/2002, as well as bank charges and financing costs incurred by the Seller because of late payment.

3.5 Obligation to pay in case of postponement request of delivery and/or Site is unsuitable to receive Goods. If the Purchaser asks for the postponement of the delivery date of the Goods as indicated in art. 5.2, the Seller has the right to ask the Purchaser for the balance of the price payment and a compensation for the deposit of the Goods at its own site or at a third party's site for its whole duration, with prior written communication to the Purchaser. With the sending of the request of the payment of the price balance, the Purchaser shall be considered as having received formal notice in accordance with the law. The costs and risks of transportation of Goods for their deposit at a third subject's shall be entirely borne by the Purchaser and shall be paid when the invoice is presented. Within the end of every month or at another due date at its discretion, the Seller shall issue an invoice to the Purchaser for the payment of the deposit costs.

3.6 Revision of prices in case of Purchaser's request to modify measurements and/or the Contract. In case the Purchaser requests modification to measurements of Goods in accordance with art. 4.3, or modifications of the Contract (by way of example and not limited to: request for extra Goods, change of material type, color variations, etc..), the Seller shall have the right to a revision of an increased price. The price agreed between the Parties shall not be in any case reduced. In case of non-acceptance of modifications by the Seller, the Purchaser shall pay the entire agreed price.

3.7 Clause limiting the pro position of exceptions. The Purchaser cannot avoid payment of owed amount, as there is a clause expressly called the clause "solve et repete", indicated in article 1462 of the Italian Civil Code.

3.8 Travel allowance. The Seller shall have the right to ask the Purchaser for a travel allowance and a reimbursement of any additional costs to those indicated in the Order Confirmation, as better described in art. 5.5.

ART. 4 – DELIVERY AND PASSING OF RISK

4.1 Delivery date. The delivery date is indicated in the Order Confirmation, the Seller is not liable for any delays in the delivery of Products, determined by fortuitous circumstances, force majeure or in any case circumstances beyond his control. The delivery dates do not have a peremptory or essential nature but are purely meant as approximate and non-binding for the Seller. Any delays in the delivery shall not entail a penalty or indemnity or compensation for damages, or application of default interests, or even a partial termination of the Contract.

4.2 Request for postponement of delivery and/or unsuitability of Site to receive Products. In case the Purchaser requests for any reason a postponement of delivery date of Products (by way of example and not limited to: delay in work progress on Worksite, delay in carrying out of work preparations to receive Products etc), the Seller shall store the Products at its own company or at a third party's and shall have the right to a reimbursement for the deposit of the Products for the whole duration of the deposit of Goods and moreover, shall have the right to the payment of the balance of the price of the Goods as referred to in the above article 3.4.

4.3 Delay in the delivery due to Purchaser. In case the Seller is late in the delivery for reasons caused by the Purchaser, the Seller shall not be liable for the delay or any allowance or damage compensation that may be requested from him, as indicated in art. 4.1.

4.4 Delivery clause. Unless otherwise agreed, the Seller delivers the Products according to Incoterms ® 2020, indicated in the Order Confirmation.

4.5 Passing of risk. Risk of loss or deterioration of Products goes to Purchaser at time of delivery of Products to Purchaser in accordance with art. 4.4.

4.6. Storage Obligation. The Purchaser undertakes to store the Products separately from other goods in the Worksite, in a dry, under shelter and supervised area, considering the particular climactic conditions of the place of destination and the nature of the material with which the Goods are built.

4.7. Communication of any damages during transportation. Upon receiving the Products at his own establishment, the Purchaser must check that the Pro-

ducts are intact and have not undergone deterioration or damages, and must communicate to the Seller and to the carrier any deterioration or damage of the Products within 2 (two) Business days of the receipt of the Products.

ART. 5 – TESTING, INSTALLATION AND TECHNICAL ASSISTANCE FOR INSTALLATION

5.1 Testing. The Purchaser may request, under penalty of forfeiture, the testing of the products in the Order. The testing, if requested, shall be carried out exclusively at one of the Seller's locations, chosen at the Seller's discretion, within 10 (ten) Business days from the notification to the Purchaser that the Products are ready for testing. The Seller may specify a cost for the execution of the testing in the Order Confirmation, which shall be borne by the Purchaser. The Seller shall prepare the "Testing Report," which shall be signed by both Parties. Any interventions for the removal of defects and/or faults shall be quantified and agreed upon by the Parties regarding the timing and methods of intervention, taking into account the Seller's production needs. The lapse of 15 (fifteen) Days without the Purchaser's participation in the testing will result in the Purchaser's waiver of the testing, and the Seller may proceed with the testing internally without any opposition.

5.2 Installation. The Installation of the Products at the Site shall be carried out by and at the expense of the Purchaser, in accordance with the procedures set forth in the "Instruction Manual" provided by the Seller.

5.3. Technical assistance for the installation at the Site. The Purchaser may ask for Technical assistance for the installation of the Goods in the Order, should he ask for it after filling out the Order, the Seller shall accept to carry out the Technical assistance at his discretion. Should the Seller accept to carry out the Technical assistance for installation the Seller shall communicate the relative costs which shall be entirely borne by the Purchaser as indicated in art. 5.7.

5.4. Number of persons. The number of persons (Operators, as defined in art. 1 lett. K) who will be in charge of the Technical assistance for the installation of the Goods shall be decided at the Seller's discretions. All the staff dedicated to the assistance is equipped with suitable individual protection (D.P.I.), based on pinpointed risks, and communicated to the Purchaser by the Seller in writing.

5.5. Extension of stay for Technical Assistance for installation of the Goods. In case the Technical assistance for installation of Goods days agreed on between the Parties should be modified and/or extended for any reason not liable to the Seller, any increased costs shall be borne by the Purchaser (ex. higher travel costs), as well as a daily allowance for each Operator, whose sum is specified in the Order Confirmation or subsequently following the request for Technical assistance for the installation. The Purchaser undertakes to pay for the owed amounts when paying the balance of the price.

5.6. Available spaces on the Site: restrooms and kitchen. The Purchaser undertakes to equip the Site with adequate sanitary facilities and suitable spaces to allow the Operators to cook and have meals. If no hotel is available near the Worksite, the Purchaser shall also arrange for decent and clean accommodation for the Operators' overnight stay.

5.7 Expenses to be borne by the Purchaser. If the Seller carries out the Technical assistance for the installation, the following expenses shall be borne by the Purchaser:

a) travelling expenses (round-trip airfare ticket) and of prophylaxis for each of the Seller's Operators, according to what the Farnesina suggests (Ministry of Foreign Affairs) or what is considered appropriate for each Operator;

b) extra travelling expenses (ex. surcharge or new airfare ticket) for each Operator, because of early or delayed return to Italy for whatever reason which is not attributable to Seller;

c) travel insurance expenses, accident, death, medical assistance in general extra, for each Operator beyond the duration of the stay for reasons not attributable to the Seller;

d) transfers in private car or in public means of transportation from the airport to the accommodation, from the accommodation to the Site and vice versa, of the Operators;

e) room and board expenses for each Operator: each Operator shall have a single room with private restroom at his disposal as well as a laundry service, a bar/restaurant service, a cleaning service and the room shall be in a secure, supervised area. The board shall include: breakfast, quick lunch (also on Worksite), dinner;

f) expenses for interpreting services in English and in the local language at the Site.

ART. 6 - RETENTION TITLE

The Products remain the property of the Seller until full payment of the price as per Article 3.1. Any formalities (e.g., contract registration) required in the Purchaser's country for the validity of this article shall be borne by the Purchaser. The Purchaser undertakes, in the event of resale of the Products to third parties before full payment to the Seller, to inform third parties that the Products belong to the Seller until full payment is made. In the event of termination of the Contract due to the Purchaser's breach, the price installments paid shall be retained by the Seller as compensation within the limits set by law, without prejudice to the right to claim further damages arising from such termination.

ART. 7 - GUARANTEE

7.1 Seller's liability. The Seller is liable for the defects of the Products, only if the defects are not due to the Purchaser's fraud or fault, and the Seller is able to verify the existence of the defects contested by the Purchaser.

7.2 Duration of the guarantee and of the deadline for reporting defects. The defects of the Goods shall be reported in writing to the Seller within 30 (thirty) Days of the discovery or from the time the Purchaser should have known about them. The guarantee shall expire within 2 (two) years of the delivery of the Goods.

7.3 Consequences in case of defects. The Seller may, at its discretion, repair, replace, or issue a credit note in the case of a Product defect, after receiving from the Purchaser photos of the defective Products via email, according to the procedures to be agreed upon by the Parties. If the Seller requests the Purchaser to send the Product to its premises or to those of its supplier for repair, the Purchaser shall bear the cost and risk of transporting the Product, including the cost and risk of returning the Product to the Site.

7.4 Prohibition for the Purchaser to repair the defective Product. The Purchaser is not authorized, in the case of defective Products, to proceed without the written consent of the Seller: a) to repair or replace the defective Product directly or indirectly through third parties; b) to send the Products to the Seller.

7.5. Exclusion of Warranty. The warranty is excluded in the following cases:

(a) failure, delayed, or partial payment of the price by the Purchaser; (b) alterations and/or modifications of the Products not authorized in writing by the Seller; (c) improper use of the Products; (d) storage and/or deposition of the Products in a manner not suitable for the nature and type of the Products; (e) electrical or hydraulic connection errors, or inadequate or absent protection of the Product; (f) improper installation of the Product; (g) the Product has been subjected to overloads beyond the rated limits; (h) contact of the Products with abrasive or corrosive liquids, or any other substances incompatible with the materials used in the construction of the Products; (i) normal wear and tear of the Products and/or their materials; (j) inadequate transportation methods if the transportation is managed by the Purchaser.

7.6 Exclusion of Liability. Without prejudice to the application of the laws regarding liability for damage caused by defective products, the Purchaser hereby waives any claim for damages and any right to cancel the Order, in whole or in part, and/or suspend payment for the Products, even if limited to the disputed batch, pursuant to Article 3.7 of this Contract.

ART. 8 - PACKAGING

8.1 Standard packaging. The standard packaging provided by the Seller for the Products and accessories is in pallets, cartons, or wooden crates.

8.2. Non-standard packaging. If the Purchaser requires a different type of packaging from the standard, it shall be communicated in the Order under penalty of forfeiture.

ART. 9- HARDSHIP CLAUSE

9.1 Bound to perform contractual duties. Each Party of this Contract is bound to perform its contractual duties even if the events have rendered performance more onerous than could reasonably have been anticipated at the time of the formation of the Contract.

9.2 Negotiation of new contractual terms. Notwithstanding art. 9.1, where a Party proves that:

a) the continued performance of its contractual duties has become excessively onerous due to an event beyond its reasonable control which it could not reasonably have been expected to have taken into account at the time of the formation of the Contract; and that

b) it could not reasonably have avoided or overcome the event or its consequences, the Parties are bound, within a reasonable time of the invocation of this article, to negotiate new contractual terms which reasonably allow for the consequences of the event.

9.3 Termination of the Contract because of lack of agreement between the Parties. Where art. 9.2 applies, but where new contractual terms which reasonably allow for the consequences of the event are not agreed by the other Party to the Contract as provided in that article, the Party invoking this article is entitled to termination of the Contract.

9.4 Consequences in case of termination of the Contract. If the Seller enforces the present article, and the Purchaser does not agree with the new contractual conditions, the Purchaser shall have the right to terminate the present Contract but shall not be entitled to a refund of what was already paid to the Seller.

ART. 10 - EARLY TERMINATION OF THE CONTRACT

10.1 Early termination of the Contract. The Seller may terminate this Contract with immediate effect, by means of an email notification followed by a written notice sent by means of communication ensuring evidence and date of receipt, in case of a breach of contractual obligations by the Purchaser, amounting to

a justifiable reason for immediate contract termination or in case of occurrence of exceptional circumstances which justify the earlier termination, as set forth below.

10.2 Breach of Contractual obligation. The Parties jointly agree that the breach of the provisions under articles 2.5, 3.4, 3.6, 9.3, 11.2, 13.2, 15.2 is to be considered in any case, whatever the importance of the violation, as a justifiable reason for immediate Contract termination. Furthermore, the breach of any other contractual obligation, which is not remedied by the breaching party within 30 (Thirty) days after having been invited in writing to do so by the order Party, shall be considered as a justifiable reason for the immediate Contract termination.

10.3 Exceptional circumstances. Shall be considered as exceptional circumstances justifying the immediate Contract termination: bankruptcy, any kind of composition between the bankrupt and the creditors, death or Purchaser's failure, civil or criminal penalties and any other circumstance that could compromise the Purchaser's reputation, any important changes in the juridical structure or in the management of the Purchaser, as well as any circumstances which may affect the punctual carrying out of the obligations set forth in the Agreement.

10.4 Consequences in case of early termination. In the event of early termination of the contract, the Purchaser recognizes the Seller's right to retain the amounts received by him as an adjustment for the price of the Goods and to request any amount still owing until the complete attainment of the total price indicated in the Order Confirmation in accordance art. 3.1, except for any further damage.

ART.11 - VALIDITY OF THE CONTRACT

1.1 Invalid or unenforceable clause. Should any clause be considered invalid or unenforceable by the judgement of a Court of competent jurisdiction or award of an Arbitral Tribunal, all other provisions shall remain in full force and effect.

11.2 Replacement of any invalid prevision. The Parties agree, however, to replace, when possible, any provision declared invalid by a provision which shall reflect their initial intent, as objectively and consistently as possible and in accordance with the basic relationship existing between the Parties.

ART. 12- NO WAIVER

The non-enforcement of any provision contained in this Contract shall not be construed by the Seller as a waiver of the right to enforce the provision at another time under different circumstances and/or enforce other provisions of this Contract.

ART. 13 - FORCE MAJEURE

13.1 Force majeure events. In the event of an Act of God (including but not limited to a flood, earthquake, typhoon, epidemic or other natural calamity), war, civil war, or armed conflict or the serious threat of the same (including but not limited to a hostile attack, blockade, embargo, riot or insurrection), governmental order or regulation (including but not limited to prohibition or restriction of importation or exportation or the regulation or allocation of energy resources), labour disputes (including but not limited to a strike, slowdown, lockout or sabotage), or any other causes beyond the reasonable control of the parties hereto (including a fire, power failure, delay in the delivery of component and/or raw materials), neither Party shall be liable for any failure to perform any of its obligations hereunder.

13.2 Termination of the Contract due to force majeure. Any Party hereto shall have the right to terminate this Agreement upon prior written notice if either party is unable to fulfil its obligations under this Agreement due to any of the above-mentioned causes and such inability continues for a period of 6 (six) months.

ART. 14 - COMMUNICATION

14.1 Form of the communication. All correspondence, communications and documents between the Parties shall be in writing in English, Spanish or French (by e-mail, courier) and shall be sent to the last known address of the other Party.

14.2 Receiving of the communication. The communications sent by mail shall be deemed to be received after 7 (seven) days from the sending. The communications sent by e-mail shall be deemed to be received the same day of the sending.

ART.15 - INTELLECTUAL PROPERTY

15.1 Ownership of Intellectual Property. The Purchaser expressly recognizes the Seller's ownership of intellectual property rights relating to present Contract, by way of example and not limited to (brands, technical and commercial documentation related to samples, catalogues, schedules, ideas, photographic and audiovisual images etc.). Any use, reproduction, dissemination or representation of such document can occur exclusively following a written authorization written by the Seller and within the limits indicated in the same authorization. Such rights are protected by the Italian law and by International regulations.

15.2 Prohibition of anti-competitive behaviour. The Purchaser is prohibited from displaying anti-competitive behaviour of the intellectual property rights, which go against the aforementioned regulations and/or agreements between the Parties.

ART. 16 – MEDIATION AND JURISDICTION

16.1 Dispute resolution with Purchaser residing or having his registered office in the European Union (Mediation and Jurisdiction).

16.1.1 Mediation. Any dispute arising from the relationship between the Parties concerning the interpretation, execution, validity, and termination of this Contract shall be submitted to a mediation procedure conducted by a sole mediator, appointed, and proceeding in accordance with the Mediation Rules of the Mediation Centre for Europe, the Mediterranean and the Middle East having its seat in Strasbourg, which Rules are in force at the date of filing of the application for mediation.

16.1.2 Exclusive jurisdiction. In the event of a negative outcome of the conciliation attempt within forty-five (45) days from the filing of the conciliation request, or within any other term agreed upon by the Parties, the dispute will be exclusively referred to the Court of Verona (Italy).

16.1.3 Venue for mediation procedure. The venue for the mediation procedure is in Padua (Italy). The language of the procedure is English.

16.2 Dispute resolution with Purchaser residing or having its registered office in a Non-EU country (Mediation and Arbitration).

16.2.1 Mediation. Any dispute arising from the relationship between the Parties concerning the interpretation, execution, validity, and termination of this Contract shall be submitted to a mediation procedure conducted by a sole mediator, appointed, and proceeding in accordance with the Mediation Rules of the Mediation Centre for Europe, the Mediterranean and the Middle East having its seat in Strasbourg, which Rules are in force at the date of filing of the application for mediation.

16.2.2 Arbitration. In the event that the mediation is not successful, the arbitration proceedings shall be conducted in accordance with the Arbitration and Internal Rules of the European Court of Arbitration being part of the European Centre of Arbitration, having its seat in Strasbourg and of which adoption of this clause constitutes acceptance, by a sole arbitrator, who will be appointed, by the Central Registrar Strasburg.

16.2.3 Seat of mediation and arbitration, language and substantive law. The seat of the mediation and arbitration proceedings shall be Padua (Italy). The language of the proceedings shall be English. The applicable rules of substantive law shall be Italian law.

16.2.4 Emergency measures. In any case, the Parties reserve the right to seek the competent judicial authority in the event of the need to obtain emergency measures to protect their rights.

ART 17 - APPLICABLE LAW

The present Contract is governed by the United Nations Convention on the International Sales of Goods and, with respect to questions not covered by such Convention by the law of Italy.

ART. 18 - PRIVACY POLICY

In compliance with the Italian Personal Data Protection Code Legislative Decree No. 196/2003), and the General Data Protection Regulation (EU Regulation 2016/679) we inform you that your personal information will be recorded and handled for legal, fiscal and commercial purposes. The processing of your personal data may be performed also to send advertising materials or to carry out commercial communication activities related to PENTAX INDUSTRIES S.P.A. You are not obliged to give us your personal information. If you do not provide your personal information, it may be impossible for us to refer, respond to, or investigate your complaint or request. This provision does not apply to the processing of personal data performed to send advertising materials to carry out commercial communication activities. We may share your information with our employees, contractors acting on our behalf, consultants, any public or private authority that must access your data, who are subject to confidentiality agreements, only for the abovementioned purposes. Your data may be disseminated through our web site or our publications for commercial reasons. The abovementioned collection and handling of information, which may be automatically processed, will be made using those tools as are appropriate to guarantee its security and confidentiality. The collection and handling of your personal information will run for a period of ten (10) years after the termination of the contractual relationship. After that period, the information will be erased. You are entitled to the rights as per articles 15-22 of EU Regulation 2016/679 and you may access your personal information to correct, update, rectify, make anonymous, integrate, cancel and/or block it. The Data Controller is PENTAX INDUSTRIES S.P.A.

NOTES

NOTES

COMPANY WITH QUALITY, ENVIRONMENT, HEALTH
AND SAFETY MANAGEMENT CERTIFIED SYSTEMS
UNI EN ISO 9001: Certificate No. 50 100 3634
UNI EN ISO 14001: Certificate No. 50 100 12552
UNI ISO 45001: Certificate No. 50 100 14960

60Hz

registered trademark of
PENTAX INDUSTRIES S.p.A.
Viale dell'Industria, 1
37040 Veronella (VR) - Italia
+39 0442 489550
com@foras-pumps.it
www.foras-pumps.it

rev. 19b_06/2026